REGULATORY INFORMATION DISTRIBUTION SYSTEM (RIDS)

ACCESSION NBR: 8709210022 DOC. DATE: 87/09/14 NOTARIZED: YES DOCKET #
FACIL: 50-275 Diablo Canyon Nuclear Power Plant, Unit 1, Pacific Ga 05000275
50-323 Diablo Canyon Nuclear Power Plant, Unit 2, Pacific Ga 05000323
AUTH. NAME AUTHOR AFFILIATION
BRAND, D. A. Public Service Electric & Gas Co. of New Jersey
RECIP. NAME RECIPIENT AFFILIATION
Document Control Branch (Document Control Desk)

SUBJECT: Forwards rept on completion of test program, per Item f of 851115 IE Bulletin 85-003, "Motor-Operated Valve Common Mode Failures During Plant Transients Due to Improper Switch Settings." Info replaces 870309 submittal in entirety.

DISTRIBUTION CODE: IE11D COPIES RECEIVED: LTR 1 ENCL 1 SIZE: 69
TITLE: Bulletin Response (50 DKT)

NOTES:

	RECIPIENT ID CODE/NAME	COPIES LTTR	COPIES ENCL	RECIPIENT ID CODE/NAME	COPIES LTTR	COPIES ENCL
	PD5 LA	1	0	PD5 PD	1	1
	TRAMMELL, C	1	1			
INTERNAL:	AEOD/DOA	1	1	AEOD/DSP	1	1
	AEOD/DSP/TPAB	1	1	NRR/DEST/ADE	1	1
	NRR/DEST/ADS	1	1	NRR/DEST/MEB	1	1
	NRR/DOEA/EAB	1	1	NRR/DOEA/GCB	1	1
	NRR/DREP/EPB	1	1	NRR/PMAS/ILRB	1	1
	REG FILE 02	1	1	RES/DE/EIB	1	1
	RGN5 FILE 01	1	1			
EXTERNAL:	LPDR	2	2	NRC PDR	1	1
	NSIC	1	1			

TOTAL NUMBER OF COPIES REQUIRED: LTTR 20 ENCL 19

PACIFIC GAS AND ELECTRIC COMPANY

PG&E 77 BEALE STREET • SAN FRANCISCO, CALIFORNIA 94106 • (415) 973-2870 • TWX 910-372-6587

D. A. BRAND
VICE PRESIDENT
POWER GENERATION

September 14, 1987

PGandE Letter No.: DCL-87-222

U. S. Nuclear Regulatory Commission
ATTN: Document Control Desk
Washington D.C. 20555

Re: Docket No. 50-275, OL-DPR-80
Docket No. 50-323, OL-DPR-82
Diablo Canyon Units 1 and 2
Response to IE Bulletin No. 85-03

In accordance with IE Bulletin 85-03 (Bulletin), "Motor-Operated Valve Common Mode Failures During Plant Transients Due to Improper Switch Settings," dated November 15, 1985, PGandE hereby submits the written report on completion of the test program for Diablo Canyon Power Plant (DCPP) Units 1 and 2 as requested by action item f. of the Bulletin. This submittal replaces the DCPP Unit 1 information in its entirety which was previously submitted in PGandE letter DCL-87-042, dated March 9, 1987. In accordance with action item f., the enclosure provides verification of completion of the requested program, a summary of valve operability prior to adjustment, and a summary of valve data in tabular form.

Kindly acknowledge receipt of this material on the enclosed copy of this letter and return it in the enclosed addressed envelope.

Subscribed to in San Francisco, California this 14th day of September 1987.

Respectfully submitted,

Pacific Gas and Electric Company

By _____
D. A. Brand
Vice President
Power Generation

Howard V. Golub
Dan G. Lubbock
Attorneys for Pacific
Gas and Electric Company

By _____
Dan G. Lubbock

Subscribed and sworn to before me
this 14th day of September 1987

_____
Therese Toliver, Notary Public in
and for the City and County of
San Francisco, State of California

OFFICIAL SEAL
THERESE TOLIVER
NOTARY PUBLIC - CALIFORNIA
CITY AND COUNTY OF SAN FRANCISCO
My Comm. Expires Dec. 25, 1990

My commission expires December 25, 1990.

Enclosure

cc: L. J. Chandler M. M. Mendonca B. Norton Diablo Distribution
J. B. Martin P. P. Narbut CPUC

1631S/0051K/DJH/79

IE11
1/1

ENCLOSURE

RESPONSE TO IE BULLETIN NO. 85-03

IE Bulletin 85-03 (Bulletin) requests that licensees develop and implement a program to ensure that switch settings on certain safety-related motor-operated valves (MOVs) are selected, set, and maintained correctly to accommodate the maximum differential pressures expected across these valves during both normal and abnormal events within the design basis.

This response for Diablo Canyon Power Plant (DCPP) Units 1 and 2 addresses Bulletin action item f, which states:

> Provide a written report on completion of the above program. This report should provide (1) a verification of completion of the requested program, (2) a summary of the findings as to valve operability prior to any adjustments as a result of this bulletin, and (3) a summary of data in accordance with Table 2, Suggested Data Summary Format. The NRC Staff intends to use this data to assist in the resolution of Generic Issue II.E.6.1. This report shall be submitted to the NRC within 60 days of completion of the program. Table 2 should be expanded, if appropriate, to include a summary of all data required to evaluate the response to this bulletin.

In PGandE letter No. DCL-86-262, dated September 2, 1986, PGandE responded to Bulletin action item e. for Diablo Canyon Units 1 and 2. Subsequently, PGandE submitted a written report on completion of the Unit 1 test program in letter No. DCL-87-042, dated March 9, 1987.

Attachment 1 describes the test program conducted for Diablo Canyon Units 1 and 2. This test program was performed during the first refueling outage for each respective unit.

Attachments 2 and 3 provide a summary of data in accordance with Table 2 of the Bulletin for Units 1 and 2, respectively. This summary includes information on the valves, valve operators, maximum and test differential pressure values, switch settings prior to adjustment, and final switch settings. Unit 1 data is being resubmitted to provide a comparison of test data for Units 1 and 2, to correct typographical errors, and to correct a test condition for 8105 and 8106. In DCL-87-042, PGandE stated that the reactor vessel head had been removed when these valves were tested, when in fact, the reactor vessel head had been in place.

Switch settings were determined by using a load cell to record MOV stem thrust during manual and electrical operation. This is the preferred method of setting the switches because it accurately measures the thrust the operator will deliver. The closing direction torque switch setting is determined by use of the load cell. The opening direction torque switch setting is then set to the same value.

When the MOV is opened, the torque switch is bypassed for the first 10 percent of valve stem travel. All MOVs are stopped when fully opened by actuation of the limit switch.

During plant construction, DCPP requested thrust force values for the MOVs from Limitorque (valve operator manufacturer). All torque switches were set in accordance with Limitorque's guidelines. Some of these settings have been increased in response to the Bulletin. Attachments 2 and 3 also address valve operability prior to actions taken in response to the Bulletin.

ATTACHMENT 1

TEST PROGRAM FOR DCPP UNITS 1 AND 2

Bulletin action item c. requires a demonstration of valve operation across maximum differential conditions:

> Individual valve settings shall be changed, as appropriate, to those established in item b, above. Whether the valve setting is changed or not, the valve will be demonstrated to be operable by testing the valve at the maximum differential pressure determined in item a above with the exception that testing motor operated valves under conditions simulating a break in the line containing the valve is not required. Otherwise, justification should be provided for any cases where testing with the maximum differential pressure cannot practicably be performed. This justification should include the alternative to maximum differential pressure testing which will be used to verify the correct settings.
>
> Note: This bulletin is not intended to establish a requirement for valve testing for the conditions simulating a break in the line containing the valve. However, to the extent that such valve operation is relied upon in the design basis, a break in the line containing the valve should be considered in the analyses prescribed in items a and b above. The resulting switch settings for pipe break conditions should be verified, to the extent practical, by the same methods that would be used to verify other settings (if any) that are not tested at the maximum differential pressure.
>
> Each valve shall be stroke tested, to the extent practical, to verify that the settings defined in item b above have been properly implemented even if testing with differential pressure cannot be performed.

In PGandE letter No. DCL-86-262, dated September 2, 1986, PGandE provided a list of motor operated valves which were selected (in accordance with the criteria provided in the Bulletin) for inclusion in the MOV test program. This list of valves can be broken into four groups for testing purposes. The testing program for each group is described below.

1. <u>High Head Discharge Valve Tests</u>

   Motor Operated Valves: 8107, 8108, 8801A, 8801B, 8803A, 8803B, 8821A, 8821B, 8835

   These MOVs were tested by running the appropriate emergency core cooling system (ECCS) pump, taking suction from the refueling water storage tank (RWST), and discharging via the normal cold leg injection flowpath to the reactor coolant system (RCS). The reactor vessel head was removed for all valve tests except Unit 2 valves 8107 and 8108, where the Unit was in Mode 5. System pressure was essentially equal to containment atmospheric pressure. The ECCS pumps recirculation flowpath was always available to

prevent pump damage when all discharge flowpaths were isolated during testing. For each valve test, the ECCS pump had only its recirculation flowpath available prior to opening each tested MOV. As the MOVs were test-stroked closed, the pump would return to its recirculation flowpath. Parallel and series valves were positioned such that the MOV under test would provide the only injection flowpath to the RCS. In this manner, maximum pump discharge pressure was developed, yielding the highest practical MOV differential pressure test value.

2. High Head Pump Recirculation Valve Tests

Motor Operated Valves: 8105, 8106, 8974A, 8974B

Pump recirculation valves, which are installed in series, were individually stroke-tested with the appropriate ECCS pump discharging to the RCS. System pressure was equal to containment atmospheric pressure for all tests except Unit 1 valves 8105 and 8106. Each recirculation valve was stroked such that the entire pump recirculation flow was isolated with its closure.

3. Auxiliary Feedwater Valve Tests

Motor Operated Valves: FCV 37, FCV 38, FCV 95, LCVs 106, 107, 108, 109

The three steam supply MOVs (Flow Control Valves FCV 37, 38 and 95) were stroked across a differential pressure equal to the Steam Generator (S/G) pressure at the time of the test. When these three flow control valves were test stroked open, all downstream piping to the turbine driven auxiliary feedwater (TDAFW) pump was depressurized and the pump turbine throttle and trip valve opened. This demonstrated the ability of each flow control valve to restore steam flow to the TDAFW pump turbine in the event of erroneous isolation. Each closing stroke-test isolated all steam to the TDAFW pump turbine. Turbine coastdown was observed.

TDAFW pump discharge MOVs (Level Control Valves LCV 106, 107, 108, 109) were stroked open across pump discharge pressure to steam generator pressure differential pressure. The MOVs were closed across the same differential pressure and flow isolation verified via control room auxiliary feedwater flow indication.

4. High Head Suction Valve Tests

Motor Operated Valves: 8976, 8923A, 8923B, 8805A, 8805B, LCV 112B, LCV 112C

No special test procedures were written for these MOVs. Periodic surveillance test procedures already in place at DCPP adequately verify valve operability. No test differential pressures were provided for valve stroke due to one or more of the following characteristics:

a. A check valve is installed downstream of the suction MOV. The RWST is located upstream of the MOV. Imposition of a differential pressure across the MOV

is impossible without removal of the check valve internals or pressurization of the refueling water storage tank. (Applicability: 8976, 8805A, 8805B)

b. Imposition of a differential pressure across the suction valves involves piping with usage factors of less than 1%, which are excluded from the Bulletin scope per PGandE letter DCL-86-262. (Applicability: 8976, 8923A, 8923B)

c. Imposition of a differential pressure across the suction valves would result in flow through an idle pump when the MOV was opened. This 'windmilling' effect is an imprudent operation, as it involves pump impeller rotation without assurance of lubrication. (Applicability: 8923A, 8923B)

d. Suction MOV is deenergized and its open position verified once per operating shift. When closed, alarm annunciation occurs once per hour in the control room, preventing a prolonged mispositioning event. (Applicability: 8976)

e. Suction MOV repositions on each safeguards actuation of the emergency core cooling system, demonstrating the operability of the valve. (Applicability: LCV 112B, 112C, 8805A, 8805B)

ATTACHMENT 2

UNIT 1 MOTOR-OPERATED VALVE DATA

I.	Valve	
	a. Valve ID No.	8107 and 8108
	b. Valve function	Centrifugal charging pump discharge to normal charging flowpath isolation valves
	c. Manufacturer	Velan
	d. Type	Wedge gate
	e. Valve identifier	3GM58FN
	f. Size (in.)	3
	g. ASME rating (lb.)	1500
	h. Equipment spec (psid)	2750
II.	Valve Operator	
	a. Manufacturer	Limitorque
	b. Model No.	SMB-00
	c. Motor RPM	1800
III.	Maximum Differential Pressure	
	a. Opening (psid)	2600
	b. Closing (psid)	2600
IV.	Test Differential Pressure	
	a. Opening (psid)	2150
	b. Closing (psid)	200
V.	Switch Settings (Load Cell Minimum Stem Thrust)	
	a. Prior to adjustment (ft-lbf)	4800
	b. Final switch setting (ft-lbf)	8550

VI. Justification for Lower Test Differential Pressure

a. Opening: These MOVs are the centrifugal charging pump discharge isolation to the RCS. To test MOVs 8107 and 8108, the centrifugal charging pump discharge flowpath to the boron injection tank (BIT) was isolated. Isolation of the BIT was accomplished by closing MOVs 8801A and 8801B, the BIT outlet isolation valves to the RCS. The 8801A and 8801B MOVs are double disk valves designed to isolate the high-pressure RCS from the low-pressure BIT during normal operations. However, with MOVs 8803A and 8803B (BIT inlet MOVs) opened, the BIT was at charging discharge pressure, while the RCS was at atmospheric pressure. Hence, some leakby through these closed MOVs did occur, which accounts for the lower charging discharge pressure (2150 psig for the Unit 1 test as compared to over 2500 psig for the Unit 2 test). MOVs 8107 and 8108 were stroked individually to demonstrate capability of each MOV to isolate charging flow.

b. Closing: The closing differential pressure test configuration represents a case where the MOVs are called upon to isolate full charging pump pressure from a depressurized RCS (simulation of a line break downstream of the MOVs). The 200 psid reading was taken prior to the start of MOV closing stroke. As each MOV completed its closing stroke, charging pressure returned to its reading of 2150 psig.

VII. As-Found Valve Operability

These MOVs have demonstrated their operability on previous activations of the ECCS, where the MOVs are required to close. While these activations did not involve full differential pressure, they did confirm that a proper operator-valve interface exists, that nothing is interfering with the travel of the valve disk, and that the valve is able to unseat.

The torque switches were originally set in accordance with valve operator manufacturer guidance. The valve and valve operator for FCV 95 are similar to 8107 and 8108. FCV 95 was also originally set in accordance with valve operator manufacturer guidance and has proven its operability at differential pressures near the maximum differential pressure value. By inference, the 8107 and 8108 valves were fully operable in the as-found condition.

I.	Valve	
	a. Valve ID No.	8803A and 8803B
	b. Valve function	Centrifugal charging pump discharge to boron injection tank isolation valves
	c. Manufacturer	Anchor/Darling
	d. Type	Double disk
	e. Valve identifier	4GM58FN
	f. Size (in.)	4
	g. ASME rating(lb.)	1500
	h. Equipment spec (psid)	2750
II.	Valve Operator	
	a. Manufacturer	Limitorque
	b. Model No.	SMB-0
	c. Motor RPM	1800
III.	Maximum Differential Pressure	
	a. Opening (psid)	2600
	b. Closing (psid)	2600
IV.	Test Differential Pressure	
	a. Opening (psid)	2500
	b. Closing (psid)	600
V.	Switch Settings (Load Cell Minimum Stem Thrust)	
	a. Prior to adjustment (ft-lbf)	9410
	b. Final switch setting (ft-lbf)	13260

VI. Justification for Lower Test Differential Pressure

a. Opening: These MOVs are the centrifugal charging pump discharge to the boron injection tank (BIT) isolation valves. To establish the opening test differential pressure, valves 8803A and 8803B were used as isolation between the centrifugal charging flow (on recirculation) and the depressurized RCS. The BIT outlet valves (8801A and 8801B) were open for the test. Thus, when 8803A and 8803B were opened, full charging flow was restored (simulation of a valve mispositioning event - inadvertent isolation of charging flow). The test differential pressure was the highest practical value obtainable.

b. Closing: The RCS was at containment atmospheric pressure during the performance of the test. This simulated a line break downstream of the 8803A and 8803B valves, requiring isolation. The 600 psid value was recorded prior to the closing of the MOV. The charging pump recirculation valves were open. As each MOV completed its close stroke, the charging pump discharge pressure returned to 2500 psig.

VII. As-Found Valve Operability

During operation in Modes 1 and 2, with the RCS at normal operating pressure, the discharge pressure of the centrifugal charging pump is approximately 2600 psig. An ECCS activation in Modes 1 and 2 will open 8803A and 8803B. BIT pressure prior to ECCS activation is approximately zero. ECCS activation during Modes 1 and 2 exposes 8803A and 8803B to the maximum differential pressure. Diablo Canyon Unit 1 has experienced ECCS activations in Modes 1 and 2. Hence, MOV operation across the maximum differential pressure and the as-found valve operability have been previously demonstrated. Nevertheless, the torque switch settings have been increased to enhance valve operability as recommended in the Bulletin.

I.	Valve	
	a. Valve ID No.	8801A and 8801B
	b. Valve function	Boron injection tank outlet to reactor coolant system cold leg isolation valves
	c. Manufacturer	Anchor/Darling
	d. Type	Double disk
	e. Valve identifier	4GM58FN
	f. Size (in.)	4
	g. ASME rating(lb.)	1500
	h. Equipment spec (psid)	2750
II.	Valve Operator	
	a. Manufacturer	Limitorque
	b. Model No.	SMB-0
	c. Motor RPM	1800
III.	Maximum Differential Pressure	
	a. Opening (psid)	2600
	b. Closing (psid)	2600
IV.	Test Differential Pressure	
	a. Opening (psid)	2250
	b. Closing (psid)	550
V.	Switch Settings (Load Cell Minimum Stem Thrust)	
	a. Prior to adjustment (ft-lbf)	9410
	b. Final switch setting (ft-lbf)	13260

VI. Justification for Lower Test Differential Pressure

a. Opening: These MOVs are the boron injection tank (BIT) outlet to the RCS isolation valves. To establish the opening test differential pressure, valves 8801A and 8801B were used as isolation between the centrifugal charging flow (on recirculation) and the depressurized RCS. The BIT inlet MOVs (8803A and 8803B) were open for the test. MOVs 8801A and 8801B are designed to isolate the high-pressure RCS from the low-pressure BIT during normal operations. Some leakby was experienced, accounting for the lower opening differential test pressure (2150 psig for the Unit 1 test as compared to over 2500 psig for the Unit 2 test). When 8801A and 8801B were opened, full charging flow was restored (simulation of a valve mispositioning event - inadvertent isolation of charging flow). The test differential pressure was the highest practical value obtainable.

b. Closing: The RCS was at containment atmospheric pressure during the performance of the test. This simulated a line break downstream of the 8801A and 8801B valves, requiring isolation. The 550 psid value was recorded prior to the closing of the MOV. The charging pump recirculation valves were open. As each MOV completed its close stroke, the charging pump discharge pressure returned to 2250 psig.

VII. As-Found Valve Operability

Operability of these MOVs is demonstrated on each safeguards actuation of the ECCS. The MOVs have demonstrated their operability on prior safeguards actuations. While these demonstrations of operability did not involve maximum differential pressure, they did confirm that a proper operator-valve interface exists, that nothing is interfering with the travel of the valve disk, and that the valve is able to unseat. The torque switches were originally set in accordance with the valve operator manufacturer's guidance, and this guidance proved adequate on other valves, such as 8803A and 8803B at their full differential pressure. Together, this evidence indicates that the valves were fully operable in the as-found condition.

I.	Valve	
	a. Valve ID No.	8821A and 8821B
	b. Valve function	Safety injection pump discharge isolation to reactor coolant cold legs
	c. Manufacturer	Velan
	d. Type	Wedge gate
	e. Valve identifier	4GM57FH
	f. Size (in.)	4
	g. ASME rating(lb.)	900
	h. Equipment spec (psid)	1500
II.	Valve Operator	
	a. Manufacturer	Limitorque
	b. Model No.	SMB-00
	c. Motor RPM	1800
III.	Maximum Differential Pressure	
	a. Opening (psid)	1625
	b. Closing (psid)	1625
IV.	Test Differential Pressure	
	a. Opening (psid)	1500
	b. Closing (psid)	690
V.	Switch Settings (Load Cell Minimum Stem Thrust)	
	a. Prior to adjustment (ft-lbf)	5830
	b. Final switch setting (ft-lbf)	9850

VI. Justification for Lower Test Differential Pressure

a. Opening: These MOVs are the safety injection (SI) pump discharge isolation to the RCS cold legs. Each of the two MOVs isolates one of two redundant SI pumps. The MOVs were tested with their dedicated SI pump running and the redundant pump off. The maximum developed head for an SI pump operating on recirculation is from 1500 to 1570 psig. It should be noted that the test configuration demonstrates the capability of the MOVs to open with their dedicated SI pump running on recirculation and the piping downstream of 8821A and/or 8821B depressurized. The test configuration, with only one SI pump running, is a more limiting case than with both pumps running because the discharge lines join prior to branching into the four loop injection lines (Attachment 4). Operating both SI pumps would reduce or eliminate any differential pressure across 8821A and/or 8821B. The test differential pressure was the highest practical value obtainable.

b. Closing: These MOVs were closed with their dedicated SI pump running and the recundant pump off. Discharge to the RCS was available, as was the recirculation flowpath. The 690 psid value was recorded prior to the closing of each MOV. As each MOV completed its closing stroke, the SI pump pressure returned to 1500 psig. The test configuration demonstrates the ability of the MOV to isolate full SI pump discharge flow with piping downstream of 8821A and 8821B depressurized. The test configuration, with only one SI pump running, is a more limiting case than with both pumps running because the discharge lines join prior to branching into the four loop injection lines.

VII. As-Found Valve Operability

Previous test strokes of the MOVs did not involve full differential pressure. These tests confirm that a proper operator-valve interface exists, that nothing is interfering with the travel of the valve disk, and that the valve is able to unseat.

The torque switches were originally set in accordance with the valve operator manufacturer guidance. The valve and valve operator for FCV 95 are similar to 8821A and 8821B. FCV 95 was also originally set in accordance with valve operator manufacturer guidance and has proven its operability at differential pressures near the maximum differential pressure value. By inference, the 8821A and 8821B valves were fully operable in the as-found condition.

I.	Valve	
	a. Valve ID No.	8835
	b. Valve function	Safety injection pump discharge isolation to reactor coolant cold legs
	c. Manufacturer	Anchor/Darling
	d. Type	Double disk
	e. Valve identifier	4GM58FN
	f. Size (in.)	4
	g. ASME rating(lb.)	1500
	h. Equipment spec (psid)	2750
II.	Valve Operator	
	a. Manufacturer	Limitorque
	b. Model No.	SMB-0
	c. Motor RPM	3600
III.	Maximum Differential Pressure	
	a. Opening (psid)	1625
	b. Closing (psid)	1625
IV.	Test Differential Pressure	
	a. Opening (psid)	1570
	b. Closing (psid)	1175
V.	Switch Settings (Load Cell Minimum Stem Thrust)	
	a. Prior to adjustment (ft-lbf)	9410
	b. Final switch setting (ft-lbf)	9410

VI. Justification for Lower Test Differential Pressure

a. Opening: This MOV is the SI pump isolation to the RCS cold legs and is located on the common header downstream of 8821A and 8821B. The MOV was opened with the RCS at containment atmospheric pressure and both SI pumps running on recirculation. This test demonstrates the ability of the MOV to restore the full flow of both SI pumps (valve mispositioning) to a fully depressurized RCS. The test differential pressure was the highest practical value obtainable.

b. Closing: Both SI pumps were running and discharging through the open MOV to the depressurized RCS. The recirculation flowpath was available. The 1175 psid value was recorded prior to the closing of the MOV. As the MOV completed its close stroke, the SI pump discharge pressure returned to 1570 psig. This test configuration represents a line break downstream of the MOV requiring isolation with both SI pumps running.

VII. As-Found Valve Operability

The load cell minimum thrust prior to receipt of the Bulletin was sufficient to ensure MOV operation across the maximum differential pressure. No changes to this minimum thrust value were made. Valve operability was never affected.

I.	Valve	
	a. Valve ID No.	8105 and 8106
	b. Valve function	Centrifugal charging pump minimum flow isolation valves
	c. Manufacturer	Velan
	d. Type	Globe
	e. Valve identifier	2TM58FN
	f. Size (in.)	2
	g. ASME rating(lb.)	1500
	h. Equipment spec (psid)	2750
II.	Valve Operator	
	a. Manufacturer	Limitorque
	b. Model No.	SMB-00
	c. Motor RPM	1800
III.	Maximum Differential Pressure	
	a. Opening (psid)	2335
	b. Closing (psid)	2335
IV.	Test Differential Pressure	
	a. Opening (psid)	2150
	b. Closing (psid)	2150
V.	Switch Settings (Load Cell Minimum Stem Thrust)	
	a. Prior to adjustment (ft-lbf)	11000
	b. Final switch setting (ft-lbf)	14745

VI. Justification for Lower Test Differential Pressure

a. Opening: The charging pump recirculation MOVs were opened with a discharge flowpath to the RCS established. RCS integrity was established. PGandE, in DCL-87-042 dated March 9, 1987, stated that the reactor vessel head was removed when in fact the vessel head was in place for the test. However, the RCS was not pressurized to its normal operating pressure of 2250 psia. Refer to Section VII, As-found Valve Operability, below.

b. Closing: In order to close the recirculation MOVs without damaging the centrifugal charging pump, a discharge flowpath to the RCS had to be available. The centrifugal charging pump pressure was lower than normal operating pressure because the RCS was not at its normal operating pressure of 2250 psia, as explained above.

VII. As-Found Valve Operability

Recirculation valves are stroke-tested monthly as part of the centrifugal charging pump operability test. During Modes 1 and 2, RCS pressure is at 2250 psia, and charging pressure is typically above 2500 psig. The volume control tank, the recirculation return, is typically at about 20 psig. Differential pressure would be greater than 2400 psid. Thus, the monthly stroke testing more than satisfies the differential test requirement.

The routine monthly surveillance testing of these globe MOVs was being performed prior to receipt of the Bulletin. Inasmuch as the MOVs are exposed to their bounding differential pressure during this testing, their operability has been previously established.

I.	Valve	
	a. Valve ID No.	8974A and 8974B
	b. Valve function	Safety injection pump minimum flow isolation valves
	c. Manufacturer	Velan
	d. Type	Globe
	e. Valve identifier	2TM58FN
	f. Size (in.)	2
	g. ASME rating(lb.)	1500
	h. Equipment spec (psid)	2750
II.	Valve Operator	
	a. Manufacturer	Limitorque
	b. Model No.	SMB-00
	c. Motor RPM	1800
III.	Maximum Differential Pressure	
	a. Opening (psid)	1625
	b. Closing (psid)	1625
IV.	Test Differential Pressure	
	a. Opening (psid)	1200
	b. Closing (psid)	1175
V.	Switch Settings (Load Cell Minimum Stem Thrust)	
	a. Prior to adjustment (ft-lbf)	11000
	b. Final switch setting (ft-lbf)	11160

VI. Justification for Lower Test Differential Pressure

a. Opening: These MOVs are the safety injection (SI) pump recirculation valves. These MOVs are installed in series and discharge to the refueling water storage tank. For performance of the test, the SI pumps were both operating and discharging to the RCS, which was at containment atmospheric pressure. The low pressure RCS explains the 1200 psig reading, as the SI pump discharge pressure exceeds 1500 psig on recirculation only. The most desirable test configuration for these MOVs would be identical to the actual test configuration, except that RCS pressure would be near the shutoff head of the SI pumps, or about 1500 psig. However, to pressurize the RCS to that value and maintain operation inside the plant heatup curves, a RCS temperature of at least 320 F would be required. This RCS temperature corresponds to operation in Mode 4. Technical Specification surveillance requirement 4.5.3.2 requires that SI pumps be demonstrated inoperable once per 12 hours. The SI pumps may be operated if the pump discharge is isolated from the RCS. Testing of recirculation valves requires a discharge flowpath be available. Thus, testing of the recirculation MOVs is not permitted by Plant Technical Specifications in Mode 4. The test differential pressure was the highest practical value obtainable.

b. Closing: The SI pumps were discharging to the depressurized RCS as described above. The test configuration represents a large break LOCA and tests the ability of the MOVs to close to allow the SI pumps to deliver full flow to the depressurized RCS. As explained above, the test configuration produces the highest differential pressure without increasing the thermal cycle loading of the injection piping.

VII. As-Found Valve Operability

The load cell test value prior to changes mandated by the Bulletin was 11000 ft-lb, minimum. The stem thrust load corresponding to the maximum estimated differential pressure is 11160 ft-lb. Procedures have been changed to require a minimum stem thrust of 11160 ft-lb. This represents a 1 percent increase in the minimum thrust value. This minor thrust load increase in response to the conservatisms assumed in the Bulletin, combined with the fact that the MOVs are globe valves, is adequate evidence that the MOVs were operable in the as-found condition.

I.	Valve	
	a. Valve ID No.	FCV 37 and FCV 38
	b. Valve function	Steam generator steam supply to steam-driven auxiliary feedwater pump
	c. Manufacturer	Velan
	d. Type	Wedge gate
	e. Valve identifier	P3-0289-N-4
	f. Size (in.)	4
	g. ASME rating(lb.)	600
	h. Equipment spec (psid)	950
II.	Valve Operator	
	a. Manufacturer	Limitorque
	b. Model No.	SMB-00
	c. Motor RPM	3600
III.	Maximum Differential Pressure	
	a. Opening (psid)	1085
	b. Closing (psid)	1085
IV.	Test Differential Pressure	
	a. Opening (psid)	830
	b. Closing (psid)	830
V.	Switch Settings (Load Cell Minimum Stem Thrust)	
	a. Prior to adjustment (ft-lbf)	2780
	b. Final switch setting (ft-lbf)	6575

VI. Justification for Lower Test Differential Pressure

a. Opening: These flow control valves (FCVs) isolate the two steam generator steam supply lines to the turbine driven auxiliary feedwater (TDAFW) pump turbine and are located upstream of FCV 95. The maximum differential pressure value corresponds to the first steam generator safety valve setpoint plus a 3 percent error. Testing at this maximum pressure would result in challenging the steam generator safety valves, and is not practical.

The test was performed during plant heatup following the first refueling outage. The Technical Specifications require demonstration of TDAFW pump operability in Mode 3 with secondary system steam pressure greater than 650 psig. At the time of test performance, the secondary steam pressure had increased to 830 psig. Each FCV was aligned to open with the TDAFW pump turbine stop and trip valves open and the steam admission piping depressurized. This demonstrated the ability of each FCV to supply steam to an inadvertently isolated TDAFW pump turbine. No overspeeding of the TDAFW pump was experienced. It should be noted that these FCVs are normally open; if they are closed, an annunciator in the control room will alert the operator to this fact.

b. Closing: As stated above, testing the FCVs at the maximum differential pressure is not practical. The test demonstrated the ability of each FCV to isolate all steam flow to the TDAFW pump turbine. Prior to closing, each FCV was aligned as the only steam supply to the TDAFW pump turbine. Once the FCV was closed, the TDAFW pump turbine was observed to coast down, indicating successful isolation of the steam supply.

VII. As-Found Valve Operability

These FCVs are normally open; if one is closed, an annunciator in the control room will alert the operator to the mispositioned valve. The valves are stroke tested monthly in Modes 1, 2, and 3 (with secondary steam pressure greater than 650 psig). While test strokes of the FCVs do not involve full differential pressure, periodically stroking the valves does confirm that a proper operator-valve interface exists, that nothing is interfering with the travel of the valve disk, and that the valve is able to unseat.

The torque switches for FCV 37 and FCV 38 were originally set in accordance with the valve operator manufacturer guidance. The valve and valve operator for FCV 95 are essentially identical to FCV 37 and FCV 38. Torque switch settings for FCV 37 and FCV 38 are identical to the settings for FCV 95. FCV 95 was also originally set in accordance with valve operator manufacturer guidance and has proven its operability at differential pressures near the maximum differential pressure value. By inference, FCV 37 and FCV 38 were fully operable in the as-found condition.

I.	Valve	
	a. Valve ID No.	FCV 95
	b. Valve function	Steam header supply isolation to steam driven auxiliary feedwater pump
	c. Manufacturer	Velan
	d. Type	Wedge gate
	e. Valve identifier	P3-0289-N-4
	f. Size (in.)	4
	g. ASME rating(lb.)	600
	h. Equipment spec (psid)	1150
II.	Valve Operator	
	a. Manufacturer	Limitorque
	b. Model No.	SMB-00
	c. Motor RPM	1900
III.	Maximum Differential Pressure	
	a. Opening (psid)	1085
	b. Closing (psid)	1085
IV.	Test Differential Pressure	
	a. Opening (psid)	830
	b. Closing (psid)	830
V.	Switch Settings (Load Cell Minimum Stem Thrust)	
	a. Prior to adjustment (ft-lbf)	2780
	b. Final switch setting (ft-lbf)	6575

VI. Justification for Lower Test Differential Pressure

a. Opening: This flow control valve (FCV) is normally closed, and opens to admit steam to the turbine driven auxiliary feedwater (TDAFW) pump turbine. The maximum differential value corresponds to the first steam generator (SG) safety lift point plus a 3 percent error. Testing the TDAFW pump at this maximum pressure would result in challenging the steam generator safety valves, and is not practical.

The test was performed at a secondary system steam pressure of 830 psig.

b. Closing: As stated above, testing the FCV across the maximum differential pressure is not practical. Test steam pressure was 830 psig.

VII. As-Found Valve Operability

Although the test differential pressure was 830 psid, FCV 95 has previously demonstrated its capability to open across a differential pressure equivalent to no-load steam pressure (approximately 1000 psig). This is because any autostart of the TDAFW pump due to steam generator level shrinkage following a reactor trip from power tests the capability of this FCV to open at no-load steam pressure. Thus, the valve has previously demonstrated its ability to open across a 1000 psid pressure.

During periodic TDAFW pump operability tests, the TDAFW pump is secured by closing FCV 95. Thus, the capability of FCV 95 to close across a differential pressure up to 1000 psid has been previously demonstrated.

This testing has been performed prior to and subsequent to the receipt and implementation of the Bulletin.

I.	Valve	
	a. Valve ID No.	LCV 106, 107, 108, 109
	b. Valve function	Steam-driven auxiliary feedwater pump discharge to steam generator isolation
	c. Manufacturer	Control Components Incorporated
	d. Type	Drag
	e. Valve identifier	RD 924-32 SW
	f. Size (in.)	2
	g. ASME rating(lb.)	900
	h. Equipment spec (psid)	1673
II.	Valve Operator	
	a. Manufacturer	Limitorque
	b. Model No.	SMC-04
	c. Motor RPM	1800
III.	Maximum Differential Pressure	
	a. Opening (psid)	1586
	b. Closing (psid)	1586
IV.	Test Differential Pressure	
	a. Opening (psid)	680
	b. Closing (psid)	680
V.	Switch Settings (Load Cell Minimum Stem Thrust)	
	a. Prior to adjustment (ft-lbf)	2000
	b. Final switch setting (ft-lbf)	2710

VI. Justification for Lower Test Differential Pressure

a. Opening: These level control valves (LCVs) are the turbine driven auxiliary feedwater (TDAFW) pump discharge isolation to each steam generator (SG). The maximum differential pressure value represents the case where SG or auxiliary feedwater line integrity is lost. This configuration is not possible to test for, as the TDAFW pump turbine is powered by secondary steam pressure. The LCVs were tested during heatup following the first refueling outage. At the time that the test was conducted, secondary steam pressure was 830 psig. The TDAFW pump deveoped a discharge head of 1510 psig - thus, the 680 psid test value.

b. Closing: As explained above, the maximum differential pressure is not a possible test configuration.

VII. As-Found Valve Operability

During normal operations, these LCVs are maintained open and in standby. Periodic monthly testing of the TDAFW pump strokes the valves partially open across a 500 to 800 psid pressure range, depending on secondary steam pressure. It should be noted that the most limiting test configuration is where secondary steam pressure is as close as possible to the minimum acceptable value of 650 psig. During Mode 1 operation at full power, the secondary side pressure is typically 700 psig. The TDAFW pump is tested monthly in Modes 1, 2 and 3 (with steam pressure greater than 650 psig). During this testing, the LCVs are initially closed, the TDAFW pumps started, and the LCVs partially opened and then reclosed. Thus, the periodic testing represents a more limiting case than the test configuration.

This testing has been performed prior to and subsequent to the receipt and implementation of the Bulletin.

I.	Valve	
	a. Valve ID No.	LCV 112B and LCV 112C
	b. Valve function	Volume control tank outlet isolation valves to centrifugal charging pump suction
	c. Manufacturer	Anchor/Darling
	d. Type	Wedge gate
	e. Valve identifier	4GM42FB
	f. Size (in.)	4
	g. ASME rating(lb.)	150
	h. Equipment spec (psid)	200
II.	Valve Operator	
	a. Manufacturer	Limitorque
	b. Model No.	SMB-00
	c. Motor RPM	3600
III.	Maximum Differential Pressure	
	a. Opening (psid)	75
	b. Closing (psid)	75
IV.	Test Differential Pressure	
	a. Opening (psid)	0
	b. Closing (psid)	0
V.	Switch Settings (Load Cell Minimum Stem Thrust)	
	a. Prior to adjustment (ft-lbf)	1852
	b. Final switch setting (ft-lbf)	1852

VI. Justification for Lower Test Differential Pressure

a. Opening: The level control valves (LCVs) are the volume control tank (VCT) suction supply to the centrifugal charging pumps. No special testing was performed. The LCVs are routinely tested in a no-load (0 psid) configuration.

The principal reason why special testing was not performed is that the load cell minimum test value is approximately 25 percent higher than required for the 75 psid maximum differential pressure.

b. Closing: As stated above, the minimum load cell test value is significantly higher than required for the 75 psid maximum differential pressure value.

These valves reposition to the closed position on each safeguards actuation of the ECCS. No special testing was performed. The LCVs are routinely tested in a no-load (0 psid) configuration.

VII. As Found Valve Operability

No changes to the torque switch settings were necessary. The minimum load cell test value is higher than the value corresponding to the 75 psid maximum differential pressure. Valve operability is not affected.

I.	Valve	
	a. Valve ID No.	8805A and 8805B
	b. Valve function	Refueling water storage tank to centrifugal charging pump suction isolation
	c. Manufacturer	Anchor/Darling
	d. Type	Wedge gate
	e. Valve identifier	8GM42FB
	f. Size (in.)	8
	g. ASME rating(lb.)	150
	h. Equipment spec (psid)	200
II.	Valve Operator	
	a. Manufacturer	Limitorque
	b. Model No.	SMB-00
	c. Motor RPM	3600
III.	Maximum Differential Pressure	
	a. Opening (psid)	75
	b. Closing (psid)	175
IV.	Test Differential Pressure	
	a. Opening (psid)	0
	b. Closing (psid)	0
V.	Switch Settings (Load Cell Minimum Stem Thrust)	
	a. Prior to adjustment (ft-lbf)	6000
	b. Final switch setting (ft-lbf)	6000

VI. Justification for Lower Test Differential Pressure

a. Opening: These MOVs are the refueling water storage tank (RWST) suction supply to the centrifugal charging pumps. No special testing was performed. The MOVs are routinely tested in a no-load (0 psid) configuration.

Pressurization of the piping on either side of these MOVs is not possible due to a downstream check valve and the vented RWST upstream.

These valves reposition to the open position on each safeguards actuation of the ECCS.

b. Closing: The higher value for the maximum differential pressure in the closing direction reflects the pressurization of the charging pump suction piping with the residual heat removal pump discharge pressure in the recirculation mode of post-accident operation. Testing these MOVs with any differential pressure is not possible for reasons stated above. No special testing was performed. The MOVs are routinely tested in a no-load configuration.

VII. As-Found Valve Operability

No changes to the torque switch settings were necessary. The minimum load cell test value is higher than the value corresponding to the 175 psid maximum differential pressure. Valve operability is not affected.

I.	Valve	
	a. Valve ID No.	8976
	b. Valve function	Refueling water storage tank to safety injection pump suction isolation
	c. Manufacturer	Anchor/Darling
	d. Type	Wedge gate
	e. Valve identifier	8GM42FB
	f. Size (in.)	8
	g. ASME rating (lb.)	150
	h. Equipment spec (psid)	200
II.	Valve Operator	
	a. Manufacturer	Limitorque
	b. Model No.	SMB-00
	c. Motor RPM	3600
III.	Maximum Differential Pressure	
	a. Opening (psid)	50
	b. Closing (psid)	175
IV.	Test Differential Pressure	
	a. Opening (psid)	0
	b. Closing (psid)	0
V.	Switch Settings (Load Cell Minimum Stem Thrust)	
	a. Prior to adjustment (ft-lbf)	6000
	b. Final switch setting (ft-lbf)	6000

VI. Justification for Lower Test Differential Pressure

a. Opening: This MOV is the refueling water storage tank (RWST) suction supply to the safety injection pumps. No special testing was performed. The MOV is routinely tested in a no-load (0 psid) configuration.

Pressurization of the piping on either side of the MOV is not possible due to a downstream check valve and the vented RWST upstream.

b. Closing: The higher value for the maximum differential pressure in the closing direction reflects the pressurization of the safety injection pump suction piping with the residual heat removal pump discharge pressure in the recirculation mode of post-accident operation. Testing the MOV with any differential pressure is not possible for reasons stated above. No special testing was performed. The MOV is routinely tested in a no-load (0 psid) configuration.

VII. As-Found Valve Operability

No changes to the torque switch settings were necessary. The minimum load cell test value is higher than the value corresponding to the 175 psid maximum differential pressure. Valve operability is not affected.

I.	Valve	
	a. Valve ID No.	8923A and 8923B
	b. Valve function	Safety injection pump suction isolation
	c. Manufacturer	Aloyco
	d. Type	Wedge gate
	e. Valve identifier	6GM42FB
	f. Size (in.)	6
	g. ASME rating (lb.)	150
	h. Equipment spec (psid)	200
II.	Valve Operator	
	a. Manufacturer	Limitorque
	b. Model No.	SMB-00
	c. Motor RPM	1800
III.	Maximum Differential Pressure	
	a. Opening (psid)	175
	b. Closing (psid)	175
IV.	Test Differential Pressure	
	a. Opening (psid)	0
	b. Closing (psid)	0
V.	Switch Settings (Load Cell Minimum Stem Thrust)	
	a. Prior to adjustment (ft-lbf)	3200
	b. Final switch setting (ft-lbf)	3200

VI. Justification for Lower Test Differential Pressure

a. Opening: These MOVs are the safety injection pump suction isolation and are located downstream of 8976 and upstream of the recirculation suction supply piping. The differential test value is based on operation of the safety injection pumps in recirculation with the suction being supplied by the residual heat removal pumps. Imposition of a test differential pressure would involve system alignment in configurations using piping with line usage factors of less than 1 percent. Additionally, the safety injection pumps would have to be shut down to prevent damage. If the MOVs were opened across a differential pressure, the pump impellers would rotate due to the resultant flow through the lines. Pump lubrication is not assured.

   The MOVs were tested in a no-load (0 psid) configuration. No special testing was performed.

b. Closing: Testing these MOVs with any differential pressure is not practical for reasons stated above. The MOVs are routinely tested in a no-load (0 psid) configuration. No special testing was performed.

VII. As-Found Valve Operability

No changes to the torque switch settings were necessary. The minimum load cell test value is higher than the value corresponding to the 175 psid maximum differential pressure. Valve operability is not affected.

ATTACHMENT 3

UNIT 2 MOTOR-OPERATED VALVE DATA

I.	Valve	
	a. Valve ID No.	8107 and 8108
	b. Valve function	Centrifugal charging pump discharge to normal charging flowpath isolation valves
	c. Manufacturer	Velan
	d. Type	Wedge gate
	e. Valve identifier	3GM58FN
	f. Size (in.)	3
	g. ASME rating(lb.)	1500
	h. Equipment spec (psid)	2750
II.	Valve Operator	
	a. Manufacturer	Limitorque
	b. Model No.	SMB-00
	c. Motor RPM	1800
III.	Maximum Differential Pressure	
	a. Opening (psid)	2600
	b. Closing (psid)	2600
IV.	Test Differential Pressure	
	a. Opening (psid)	2570
	b. Closing (psid)	290
V.	Switch Settings (Load Cell Minimum Stem Thrust)	
	a. Prior to adjustment (ft-lbf)	4780
	b. Final switch setting (ft-lbf)	8550

VI. Justification for Lower Test Differential Pressure

a. Opening: Each MOV was opened with the centrifugal charging pump running on recirculation. The test differential pressure is slightly smaller than the maximum postulated differential pressure, and represents the maximum practical test differential pressure.

b. Closing: The closing differential pressure test configuration represents a case where the MOVs are called upon to isolate full charging pump pressure from a depressurized RCS (simulation of a line break downstream of the MOVs). The 290 psid reading was taken prior to the start of MOV closing stroke. As each MOV completed its closing stroke, charging pressure returned to its reading of 2570 psig.

VII. As-Found Valve Operability

These MOVs have demonstrated their operability on previous activations of the ECCS, where the MOVs are required to close. While these activations did not involve full differential pressure, they did confirm that a proper operator-valve interface exists, that nothing is interfering with the travel of the valve disk, and that the valve is able to unseat.

The torque switches were originally set in accordance with valve operator manufacturer guidance. The valve and valve operator for FCV 95 are similar to 8107 and 8108. FCV 95 was also originally set in accordance with valve operator manufacturer guidance and has proven its operability at differential pressures near the maximum differential pressure value. By inference, the 8107 and 8108 valves were fully operable in the as-found condition.

I.	Valve	
	a. Valve ID No.	8803A and 8803B
	b. Valve function	Centrifugal charging pump discharge to boron injection tank isolation valves
	c. Manufacturer	Velan
	d. Type	Wedge Gate
	e. Valve identifier	4GM58FN
	f. Size (in.)	4
	g. ASME rating(lb.)	1500
	h. Equipment spec (psid)	2750
II.	Valve Operator	
	a. Manufacturer	Limitorque
	b. Model No.	SMB-0
	c. Motor RPM	1800
III.	Maximum Differential Pressure	
	a. Opening (psid)	2600
	b. Closing (psid)	2600
IV.	Test Differential Pressure	
	a. Opening (psid)	2525
	b. Closing (psid)	1500
V.	Switch Settings (Load Cell Minimum Stem Thrust)	
	a. Prior to adjustment (ft-lbf)	9450
	b. Final switch setting (ft-lbf)	13455

VI. Justification for Lower Test Differential Pressure

a. Opening: These MOVs are the centrifugal charging pump discharge to the boron injection tank (BIT) isolation valves. To establish the opening test differential pressure, valves 8803A and 8803B were used as isolation between the centrifugal charging flow (on recirculation) and the depressurized RCS. The BIT outlet valves (8801A and 8801B) were open for the test. Thus, when 8803A and 8803B were opened, full charging flow was restored (simulation of a valve mispositioning event - inadvertent isolation of charging flow). The test differential pressure was the highest practical value obtainable.

b. Closing: The RCS was at containment atmospheric pressure during the performance of the test. This simulated a line break downstream of the 8803A and 8803B valves, requiring isolation. The 1500 psid value was recorded prior to the closing of the MOV. The charging pump recirculation valves were open. As each MOV completed its close stroke, the charging pump discharge pressure returned to 2525 psig.

VII. As-Found Valve Operability

During operation in Modes 1 and 2, with the RCS at normal operating pressure, the discharge pressure of the centrifugal charging pump is approximately 2600 psig. An ECCS activation in Modes 1 and 2 will open 8803A and 8803B. BIT pressure prior to ECCS activation is approximately 0 psig. ECCS activation during Modes 1 and 2 exposes 8803A and 8803B to the maximum differential pressure. Diablo Canyon Unit 2 has experienced ECCS activations in Modes 1 and 2. Hence, MOV operation across the maximum differential pressure and the as-found valve operability have been previously demonstrated. Nevertheless, the torque switch settings have been increased to enhance valve operability as recommended in the Bulletin.

I.	Valve	
	a. Valve ID No.	8801A and 8801B
	b. Valve function	Boron injection tank outlet to reactor coolant system cold leg isolation valves
	c. Manufacturer	Velan
	d. Type	Wedge Gate
	e. Valve identifier	4GM58FN
	f. Size (in.)	4
	g. ASME rating(lb.)	1500
	h. Equipment spec (psid)	2750
II.	Valve Operator	
	a. Manufacturer	Limitorque
	b. Model No.	SMB-0
	c. Motor RPM	1800
III.	Maximum Differential Pressure	
	a. Opening (psid)	2600
	b. Closing (psid)	2600
IV.	Test Differential Pressure	
	a. Opening (psid)	2550
	b. Closing (psid)	475
V.	Switch Settings (Load Cell Minimum Stem Thrust)	
	a. Prior to adjustment (ft-lbf)	9450
	b. Final switch setting (ft-lbf)	13455

VI. Justification for Lower Test Differential Pressure

a. Opening: These MOVs are the boron injection tank (BIT) outlet to the RCS isolation valves. To establish the opening test differential pressure, valves 8801A and 8801B were used as isolation between the centrifugal charging flow (on recirculation) and the depressurized RCS. The BIT inlet MOVs (8803A and 8803B) were open for the test. Thus, when 8801 A and 8801 B were opened, full charging flow was restored (simulation of a valve mispositioning event - inadvertent isolation of charging flow). The test differential pressure was the highest practical value obtainable.

b. Closing: The RCS was at containment atmospheric pressure during the performance of the test. This simulated a line break downstream of the 8801A and 8801B valves, requiring isolation. The 475 psid value was recorded prior to the closing of the MOV. The charging pump recirculation valves were open. As each MOV completed its close stroke, the charging pump discharge pressure returned to 2550 psig.

VII. As-Found Valve Operability

Operability of these MOVs is demonstrated on each safeguards actuation of the ECCS. The MOVs have demonstrated their operability on prior safeguards actuations. While these demonstrations of operability did not involve maximum differential pressure, they did confirm that a proper operator-valve interface exists, that nothing is interfering with the travel of the valve disk, and that the valve is able to unseat. The torque switches were originally set in accordance with the valve operator manufacturer's guidance, and this guidance proved adequate on other valves, such as 8803A and 8803B at their full differential pressure. Together, this evidence indicates that the valves were fully operable in the as-found condition.

I.	Valve	
	a. Valve ID No.	8821A and 8821B
	b. Valve function	Safety injection pump discharge isolation to reactor coolant cold legs
	c. Manufacturer	Velan
	d. Type	Wedge gate
	e. Valve identifier	4GM57FH
	f. Size (in.)	4
	g. ASME rating(lb.)	900
	h. Equipment spec (psid)	1500
II.	Valve Operator	
	a. Manufacturer	Limitorque
	b. Model No.	SMB-00
	c. Motor RPM	1800
III.	Maximum Differential Pressure	
	a. Opening (psid)	1625
	b. Closing (psid)	1625
IV.	Test Differential Pressure	
	a. Opening (psid)	1520
	b. Closing (psid)	720
V.	Switch Settings (Load Cell Minimum Stem Thrust)	
	a. Prior to adjustment (ft-lbf)	5830
	b. Final switch setting (ft-lbf)	9850

VI. Justification for Lower Test Differential Pressure

a. Opening: These MOVs are the safety injection (SI) pump discharge isolation to the RCS cold legs. Each of the two MOVs isolates one of two redundant SI pumps. The MOVs were tested with their dedicated SI pump running and the redundant pump off. The maximum developed head for an SI pump operating on recirculation is from 1520 to 1550 psig. It should be noted that the test configuration demonstrates the capability of the MOVs to open with their dedicated SI pump running on recirculation and the piping downstream of 8821A and/or 8821B depressurized. The test configuration, with only one SI pump running, is a more limiting case than with both pumps running because the discharge lines join prior to branching into the four loop injection lines (Attachment 4). Operating both SI pumps would reduce or eliminate any differential pressure across 8821A and/or 8821B. The test differential pressure was the highest practical value obtainable.

b. Closing: These MOVs were closed with their dedicated SI pump running and the recundant pump off. Discharge to the RCS was available, as was the recirculation flowpath. The 720 psid value was recorded prior to the closing of each MOV. As each MOV completed its closing stroke, the SI pump pressure returned to 1520 psig. The test configuration demonstrates the ability of the MOV to isolate full SI pump discharge flow with piping downstream of 8821A and 8821B depressurized. The test configuration, with only one SI pump running, is a more limiting case than with both pumps running because the discharge lines join prior to branching into the four loop injection lines.

VII. As-Found Valve Operability

Previous test strokes of the MOVs did not involve full differential pressure. These tests confirm that a proper operator-valve interface exists, that nothing is interfering with the travel of the valve disk, and that the valve is able to unseat.

The torque switches were originally set in accordance with the valve operator manufacturer guidance. The valve and valve operator for FCV 95 are similar to 8821A and 8821B. FCV 95 was also originally set in accordance with valve operator manufacturer guidance and has proven its operability at differential pressures near the maximum differential pressure value. By inference, the 8821A and 8821B valves were fully operable in the as-found condition.

I.	Valve	
	a. Valve ID No.	8835
	b. Valve function	Safety injection pump discharge isolation to reactor coolant cold legs
	c. Manufacturer	Anchor/Darling
	d. Type	Double disk
	e. Valve identifier	4GM58FN
	f. Size (in.)	4
	g. ASME rating(lb.)	1500
	h. Equipment spec (psid)	2750
II.	Valve Operator	
	a. Manufacturer	Limitorque
	b. Model No.	SMB-0
	c. Motor RPM	3600
III.	Maximum Differential Pressure	
	a. Opening (psid)	1625
	b. Closing (psid)	1625
IV.	Test Differential Pressure	
	a. Opening (psid)	1520
	b. Closing (psid)	1170
V.	Switch Settings (Load Cell Minimum Stem Thrust)	
	a. Prior to adjustment (ft-lbf)	9410
	b. Final switch setting (ft-lbf)	9410

VI. Justification for Lower Test Differential Pressure

a. Opening: This MOV is the SI pump isolation to the RCS cold legs and is located on the common header downstream of 8821A and 8821B. The MOV was opened with the RCS at containment atmospheric pressure and both SI pumps running on recirculation. This test demonstrates the ability of the MOV to restore the full flow of both SI pumps (valve mispositioning) to a fully depressurized RCS. The test differential pressure was the highest practical value obtainable.

b. Closing: Both SI pumps were running and discharging through the open MOV to the depressurized RCS. The recirculation flowpath was available. The 1170 psid value was recorded prior to the closing of the MOV. As the MOV completed its close stroke, the SI pump discharge pressure returned to 1520 psig. This test configuration represents a line break downstream of the MOV requiring isolation with both SI pumps running.

VII. As-Found Valve Operability

The load cell minimum thrust prior to receipt of the Bulletin was sufficient to ensure MOV operation across the maximum differential pressure. No changes to this minimum thrust value were made. Valve operability was never affected.

I.	Valve	
	a. Valve ID No.	8105 and 8106
	b. Valve function	Centrifugal charging pump minimum flow isolation valves
	c. Manufacturer	Velan
	d. Type	Globe
	e. Valve identifier	2TM58FN
	f. Size (in.)	2
	g. ASME rating (lb.)	1500
	h. Equipment spec (psid)	2750
II.	Valve Operator	
	a. Manufacturer	Limitorque
	b. Model No.	SMB-00
	c. Motor RPM	1800
III.	Maximum Differential Pressure	
	a. Opening (psid)	2335
	b. Closing (psid)	2335
IV.	Test Differential Pressure	
	a. Opening (psid)	290
	b. Closing (psid)	290
V.	Switch Settings (Load Cell Minimum Stem Thrust)	
	a. Prior to adjustment (ft-lbf)	11000
	b. Final switch setting (ft-lbf)	14745

VI. Justification for Lower Test Differential Pressure

a. Opening: The charging pump recirculation MOVs were opened with a discharge flowpath to the RCS established. The RCS was at atmospheric pressure. This low-pressure discharge flowpath reduced the centrifugal charging pump discharge pressure significantly. Refer to Section VII, As-found Valve Operability, below.

b. Closing: In order to close the recirculation MOVs without damaging the centrifugal charging pump, a discharge flowpath to the RCS had to be available. The centrifugal charging pump pressure was significantly lower because the RCS was depressurized, as explained above.

VII. As-Found Valve Operability

Recirculation valves are stroke-tested monthly as part of the centrifugal charging pump operability test. During Modes 1 and 2, RCS pressure is at 2250 psia, and charging pressure is typically above 2500 psig. The volume control tank, the recirculation return, is typically at about 20 psig. Differential pressure would be greater than 2400 psid. Thus, the monthly stroke testing more than satisfies the differential test requirement.

The routine monthly surveillance testing of these globe MOVs was being performed prior to receipt of the Bulletin. Inasmuch as the MOVs are exposed to their bounding differential pressure during this testing, their operability has been previously established.

I.	Valve	
	a. Valve ID No.	8974A and 8974B
	b. Valve function	Safety injection pump minimum flow isolation valves
	c. Manufacturer	Velan
	d. Type	Globe
	e. Valve identifier	2TM58FN
	f. Size (in.)	2
	g. ASME rating(lb.)	1500
	h. Equipment spec (psid)	2750
II.	Valve Operator	
	a. Manufacturer	Limitorque
	b. Model No.	SMB-00
	c. Motor RPM	1800
III.	Maximum Differential Pressure	
	a. Opening (psid)	1625
	b. Closing (psid)	1625
IV.	Test Differential Pressure	
	a. Opening (psid)	1175
	b. Closing (psid)	1175
V.	Switch Settings (Load Cell Minimum Stem Thrust)	
	a. Prior to adjustment (ft-lbf)	11000
	b. Final switch setting (ft-lbf)	11160

VI. Justification for Lower Test Differential Pressure

a. Opening: These MOVs are the safety injection (SI) pump recirculation valves. These MOVs are installed in series and discharge to the refueling water storage tank. For performance of the test, the SI pumps were both operating and discharging to the RCS, which was at containment atmospheric pressure. The low pressure RCS explains the 1175 psig reading, as the SI pump discharge pressure exceeds 1500 psig on recirculation only. The most desirable test configuration for these MOVs would be identical to the actual test configuration, except that RCS pressure would be near the shutoff head of the SI pumps, or about 1500 psig. However, to pressurize the RCS to that value and maintain operation inside the plant heatup curves, a RCS temperature of at least 320 F would be required. This RCS temperature corresponds to operation in Mode 4. Technical Specification surveillance requirement 4.5.3.2 requires that SI pumps be demonstrated inoperable once per 12 hours. The SI pumps may be operated if the pump discharge is isolated from the RCS. Testing of recirculation valves requires a discharge flowpath be available. Thus, testing of the recirculation MOVs is not permitted by Plant Technical Specifications in Mode 4. The test differential pressure was the highest practical value obtainable.

b. Closing: The SI pumps were discharging to the depressurized RCS as described above. The test configuration represents a large break LOCA and tests the ability of the MOVs to close to allow the SI pumps to deliver full flow to the depressurized RCS. As explained above, the test configuration produces the highest differential pressure without increasing the thermal cycle loading of the injection piping.

VII. As-Found Valve Operability

The load cell test value prior to changes mandated by the Bulletin was 11000 ft-lb, minimum. The stem thrust load corresponding to the maximum estimated differential pressure is 11160 ft-lb. Procedures have been changed to require a minimum stem thrust of 11160 ft-lb. This represents a 1 percent increase in the minimum thrust value. This minor thrust load increase in response to the conservatisms assumed in the Bulletin, combined with the fact that the MOVs are globe valves, is adequate evidence that the MOVs were operable in the as-found condition.

I.	Valve	
	a. Valve ID No.	FCV 37 and FCV 38
	b. Valve function	Steam generator steam supply to steam-driven auxiliary feedwater pump
	c. Manufacturer	Velan
	d. Type	Wedge gate
	e. Valve identifier	P3-0289-N-4
	f. Size (in.)	4
	g. ASME rating(lb.)	600
	h. Equipment spec (psid)	950
II.	Valve Operator	
	a. Manufacturer	Limitorque
	b. Model No.	SMB-00
	c. Motor RPM	3600
III.	Maximum Differential Pressure	
	a. Opening (psid)	1085
	b. Closing (psid)	1085
IV.	Test Differential Pressure	
	a. Opening (psid)	900
	b. Closing (psid)	900
V.	Switch Settings (Load Cell Minimum Stem Thrust)	
	a. Prior to adjustment (ft-lbf)	2780
	b. Final switch setting (ft-lbf)	6575

VI. Justification for Lower Test Differential Pressure

a. Opening: These flow control valves (FCVs) isolate the two steam generator steam supply lines to the turbine driven auxiliary feedwater (TDAFW) pump turbine and are located upstream of FCV 95. The maximum differential pressure value corresponds to the first steam generator safety valve setpoint plus a 3 percent error. Testing at this maximum pressure would result in challenging the steam generator safety valves, and is not practical.

The test was performed during plant heatup following the first refueling outage. The Technical Specifications require demonstration of TDAFW pump operability in Mode 3 with secondary system steam pressure greater than 650 psig. At the time of test performance, the secondary steam pressure had increased to 900 psig. Each FCV was aligned to open with the TDAFW pump turbine stop and trip valves open and the steam admission piping depressurized. This demonstrated the ability of each FCV to supply steam to an inadvertently isolated TDAFW pump turbine. No overspeeding of the TDAFW pump was experienced. It should be noted that these FCVs are normally open; if they are closed, an annunciator in the control room will alert the operator to this fact.

b. Closing: As stated above, testing the FCVs at the maximum differential pressure is not practical. The test demonstrated the ability of each FCV to isolate all steam flow to the TDAFW pump turbine. Prior to closing, each FCV was aligned as the only steam supply to the TDAFW pump turbine. Once the FCV was closed, the TDAFW pump turbine was observed to coast down, indicating successful isolation of the steam supply.

VII. As-Found Valve Operability

These FCVs are normally open; if one is closed, an annunciator in the control room will alert the operator to the mispositioned valve. The valves are stroke tested monthly in Modes 1, 2, and 3 (with secondary steam pressure greater than 650 psig). While test strokes of the FCVs do not involve full differential pressure, periodically stroking the valves does confirm that a proper operator-valve interface exists, that nothing is interfering with the travel of the valve disk, and that the valve is able to unseat.

The torque switches were originally set in accordance with the valve operator manufacturer guidance. The valve and valve operator for FCV 95 are essentially identical to FCV 37 and FCV 38. FCV 95 was also originally set in accordance with valve operator manufacturer guidance and has proven its operability at differential pressures near the maximum differential pressure value. By inference, FCV 37 and FCV 38 were fully operable in the as-found condition.

I.	Valve	
	a. Valve ID No.	FCV 95
	b. Valve function	Steam header supply isolation to steam driven auxiliary feedwater pump
	c. Manufacturer	Velan
	d. Type	Wedge gate
	e. Valve identifier	P3-0289-N-4
	f. Size (in.)	4
	g. ASME rating(lb.)	600
	h. Equipment spec (psid)	1150
II.	Valve Operator	
	a. Manufacturer	Limitorque
	b. Model No.	SMB-00
	c. Motor RPM	1900
III.	Maximum Differential Pressure	
	a. Opening (psid)	1085
	b. Closing (psid)	1085
IV.	Test Differential Pressure	
	a. Opening (psid)	900
	b. Closing (psid)	900
V.	Switch Settings (Load Cell Minimum Stem Thrust)	
	a. Prior to adjustment (ft-lbf)	2780
	b. Final switch setting (ft-lbf)	6575

VI. Justification for Lower Test Differential Pressure

a. Opening: This flow control valve (FCV) is normally closed, and opens to admit steam to the turbine driven auxiliary feedwater (TDAFW) pump turbine. The maximum differential value corresponds to the first steam generator (SG) safety lift point plus a 3 percent error. Testing the TDAFW pump at this maximum pressure would result in challenging the steam generator safety valves, and is not practical.

   The test was performed at a secondary system steam pressure of 900 psig.

b. Closing: As stated above, testing the FCV across the maximum differential pressure is not practical. Test steam pressure was 900 psig.

VII. As-Found Valve Operability

Although the test differential pressure was 900 psid, FCV 95 has previously demonstrated its capability to open across a differential pressure equivalent to no-load steam pressure (approximately 1000 psig). This is because any autostart of the TDAFW pump due to steam generator level shrinkage following a reactor trip from power tests the capability of this FCV to open at no-load steam pressure. Thus, the valve has previously demonstrated its ability to open across a 1000 psid pressure.

During periodic TDAFW pump operability tests, the TDAFW pump is secured by closing FCV 95. Thus, the capability of FCV 95 to close across a differential pressure up to 1000 psid has been previously demonstrated.

This testing has been performed prior to and subsequent to the receipt and implementation of the Bulletin.

I.	Valve	
	a. Valve ID No.	LCV 106, 107, 108, 109
	b. Valve function	Steam-driven auxiliary feedwater pump discharge to steam generator isolation
	c. Manufacturer	Control Components Incorporated
	d. Type	Drag
	e. Valve identifier	RD 924-32 SW
	f. Size (in.)	2
	g. ASME rating(lb.)	900
	h. Equipment spec (psid)	1673
II.	Valve Operator	
	a. Manufacturer	Limitorque
	b. Model No.	SMC-04
	c. Motor RPM	1800
III.	Maximum Differential Pressure	
	a. Opening (psid)	1586
	b. Closing (psid)	1586
IV.	Test Differential Pressure	
	a. Opening (psid)	605
	b. Closing (psid)	605
V.	Switch Settings (Load Cell Minimum Stem Thrust)	
	a. Prior to adjustment (ft-lbf)	2000
	b. Final switch setting (ft-lbf)	2710

VI. Justification for Lower Test Differential Pressure

a. Opening: These level control valves (LCVs) are the turbine driven auxiliary feedwater (TDAFW) pump discharge isolation to each steam generator (SG). The maximum differential pressure value represents the case where SG or auxiliary feedwater line integrity is lost. This configuration is not possible to test for, as the TDAFW pump turbine is powered by secondary steam pressure. The LCVs were tested during heatup following the first refueling outage. At the time that the test was conducted, secondary steam pressure was 865 psig. The TDAFW pump deveoped a discharge head of 1470 psig - thus, the 605 psid test value.

b. Closing: As explained above, the maximum differential pressure is not a possible test configuration.

VII. As-Found Valve Operability

During normal operations, these LCVs are maintained open and in standby. Periodic monthly testing of the TDAFW pump strokes the valves partially open across a 500 to 800 psid pressure range, depending on secondary steam pressure. It should be noted that the most limiting test configuration is where secondary steam pressure is as close as possible to the minimum acceptable value of 650 psig. During Mode 1 operation at full power, the secondary side pressure is typically 700 psig. The TDAFW pump is tested monthly in Modes 1, 2 and 3 (with steam pressure greater than 650 psig). During this testing, the LCVs are initially closed, the TDAFW pumps started, and the LCVs partially opened and then reclosed. Thus, the periodic testing represents a more limiting case than the test configuration.

This testing has been performed prior to and subsequent to the receipt and implementation of the Bulletin.

I.	Valve	
	a. Valve ID No.	LCV 112B and LCV 112C
	b. Valve function	Volume control tank outlet isolation valves to centrifugal charging pump suction
	c. Manufacturer	Anchor/Darling
	d. Type	Wedge gate
	e. Valve identifier	4GM42FB
	f. Size (in.)	4
	g. ASME rating(lb.)	150
	h. Equipment spec (psid)	200
II.	Valve Operator	
	a. Manufacturer	Limitorque
	b. Model No.	SMB-00
	c. Motor RPM	3600
III.	Maximum Differential Pressure	
	a. Opening (psid)	75
	b. Closing (psid)	75
IV.	Test Differential Pressure	
	a. Opening (psid)	0
	b. Closing (psid)	0
V.	Switch Settings (Load Cell Minimum Stem Thrust)	
	a. Prior to adjustment (ft-lbf)	1852
	b. Final switch setting (ft-lbf)	1852

VI. Justification for Lower Test Differential Pressure

a. Opening: The level control valves (LCVs) are the volume control tank (VCT) suction supply to the centrifugal charging pumps. No special testing was performed. The LCVs are routinely tested in a no-load (0 psid) configuration.

The principal reason why special testing was not performed is that the load cell minimum test value is approximately 25 percent higher than required for the 75 psid maximum differential pressure.

b. Closing: As stated above, the minimum load cell test value is significantly higher than required for the 75 psid maximum differential pressure value.

These valves reposition to the closed position on each safeguards actuation of the ECCS. No special testing was performed. The LCVs are routinely tested in a no-load (0 psid) configuration.

VII. As Found Valve Operability

No changes to the torque switch settings were necessary. The minimum load cell test value is higher than the value corresponding to the 75 psid maximum differential pressure. Valve operability is not affected.

I.	Valve	
	a. Valve ID No.	8805A and 8805B
	b. Valve function	Refueling water storage tank to centrifugal charging pump suction isolation
	c. Manufacturer	Anchor/Darling
	d. Type	Wedge gate
	e. Valve identifier	8GM42FB
	f. Size (in.)	8
	g. ASME rating(lb.)	150
	h. Equipment spec (psid)	200
II.	Valve Operator	
	a. Manufacturer	Limitorque
	b. Model No.	SMB-00
	c. Motor RPM	3600
III.	Maximum Differential Pressure	
	a. Opening (psid)	75
	b. Closing (psid)	175
IV.	Test Differential Pressure	
	a. Opening (psid)	0
	b. Closing (psid)	0
V.	Switch Settings (Load Cell Minimum Stem Thrust)	
	a. Prior to adjustment (ft-lbf)	4800
	b. Final switch setting (ft-lbf)	4800

VI. Justification for Lower Test Differential Pressure

a. Opening: These MOVs are the refueling water storage tank (RWST) suction supply to the centrifugal charging pumps. No special testing was performed. The MOVs are routinely tested in a no-load (0 psid) configuration.

Pressurization of the piping on either side of these MOVs is not possible due to a downstream check valve and the vented RWST upstream.

These valves reposition to the open position on each safeguards actuation of the ECCS.

b. Closing: The higher value for the maximum differential pressure in the closing direction reflects the pressurization of the charging pump suction piping with the residual heat removal pump discharge pressure in the recirculation mode of post-accident operation. Testing these MOVs with any differential pressure is not possible for reasons stated above. No special testing was performed. The MOVs are routinely tested in a no-load configuration.

VII. As-Found Valve Operability

No changes to the torque switch settings were necessary. The minimum load cell test value is higher than the value corresponding to the 175 psid maximum differential pressure. Valve operability is not affected.

I.	Valve	
	a. Valve ID No.	8976
	b. Valve function	Refueling water storage tank to safety injection pump suction isolation
	c. Manufacturer	Anchor/Darling
	d. Type	Wedge gate
	e. Valve identifier	8GM42FB
	f. Size (in.)	8
	g. ASME rating (lb.)	150
	h. Equipment spec (psid)	200
II.	Valve Operator	
	a. Manufacturer	Limitorque
	b. Model No.	SMB-00
	c. Motor RPM	3600
III.	Maximum Differential Pressure	
	a. Opening (psid)	50
	b. Closing (psid)	175
IV.	Test Differential Pressure	
	a. Opening (psid)	0
	b. Closing (psid)	0
V.	Switch Settings (Load Cell Minimum Stem Thrust)	
	a. Prior to adjustment (ft-lbf)	4800
	b. Final switch setting (ft-lbf)	4800

VI. Justification for Lower Test Differential Pressure

a. Opening: This MOV is the refueling water storage tank (RWST) suction supply to the safety injection pumps. No special testing was performed. The MOV is routinely tested in a no-load (0 psid) configuration.

Pressurization of the piping on either side of the MOV is not possible due to a downstream check valve and the vented RWST upstream.

b. Closing: The higher value for the maximum differential pressure in the closing direction reflects the pressurization of the safety injection pump suction piping with the residual heat removal pump discharge pressure in the recirculation mode of post-accident operation. Testing the MOV with any differential pressure is not possible for reasons stated above. No special testing was performed. The MOV is routinely tested in a no-load (0 psid) configuration.

VII. As-Found Valve Operability

No changes to the torque switch settings were necessary. The minimum load cell test value is higher than the value corresponding to the 175 psid maximum differential pressure. Valve operability is not affected.

I.	Valve	
	a. Valve ID No.	8923A and 8923B
	b. Valve function	Safety injection pump suction isolation
	c. Manufacturer	Aloyco
	d. Type	Wedge gate
	e. Valve identifier	6GM42FB
	f. Size (in.)	6
	g. ASME rating (lb.)	150
	h. Equipment spec (psid)	200
II.	Valve Operator	
	a. Manufacturer	Limitorque
	b. Model No.	SMB-00
	c. Motor RPM	1800
III.	Maximum Differential Pressure	
	a. Opening (psid)	175
	b. Closing (psid)	175
IV.	Test Differential Pressure	
	a. Opening (psid)	0
	b. Closing (psid)	0
V.	Switch Settings (Load Cell Minimum Stem Thrust)	
	a. Prior to adjustment (ft-lbf)	3200
	b. Final switch setting (ft-lbf)	3200

VI. Justification for Lower Test Differential Pressure

a. Opening: These MOVs are the safety injection pump suction isolation and are located downstream of 8976 and upstream of the recirculation suction supply piping. The differential test value is based on operation of the safety injection pumps in recirculation with the suction being supplied by the residual heat removal pumps. Imposition of a test differential pressure would involve system alignment in configurations using piping with line usage factors of less than 1 percent. Additionally, the safety injection pumps would have to be shut down to prevent damage. If the MOVs were opened across a differential pressure, the pump impellers would rotate due to the resultant flow through the lines. Pump lubrication is not assured.

The MOVs were tested in a no-load (0 psid) configuration. No special testing was performed.

b. Closing: Testing these MOVs with any differential pressure is not practical for reasons stated above. The MOVs are routinely tested in a no-load (0 psid) configuration. No special testing was performed.

VII. As-Found Valve Operability

No changes to the torque switch settings were necessary. The minimum load cell test value is higher than the value corresponding to the 175 psid maximum differential pressure. Valve operability is not affected.

ATTACHMENT 4

SIMPLIFIED DCPP PIPING SCHEMATICS FOR:

AUXILIARY FEEDWATER SYSTEM

SAFETY INJECTION SYSTEM

CHARGING AND BIT ONE LINE DIAGRAM

AUXILIARY FEEDWATER (AFW) SYSTEM

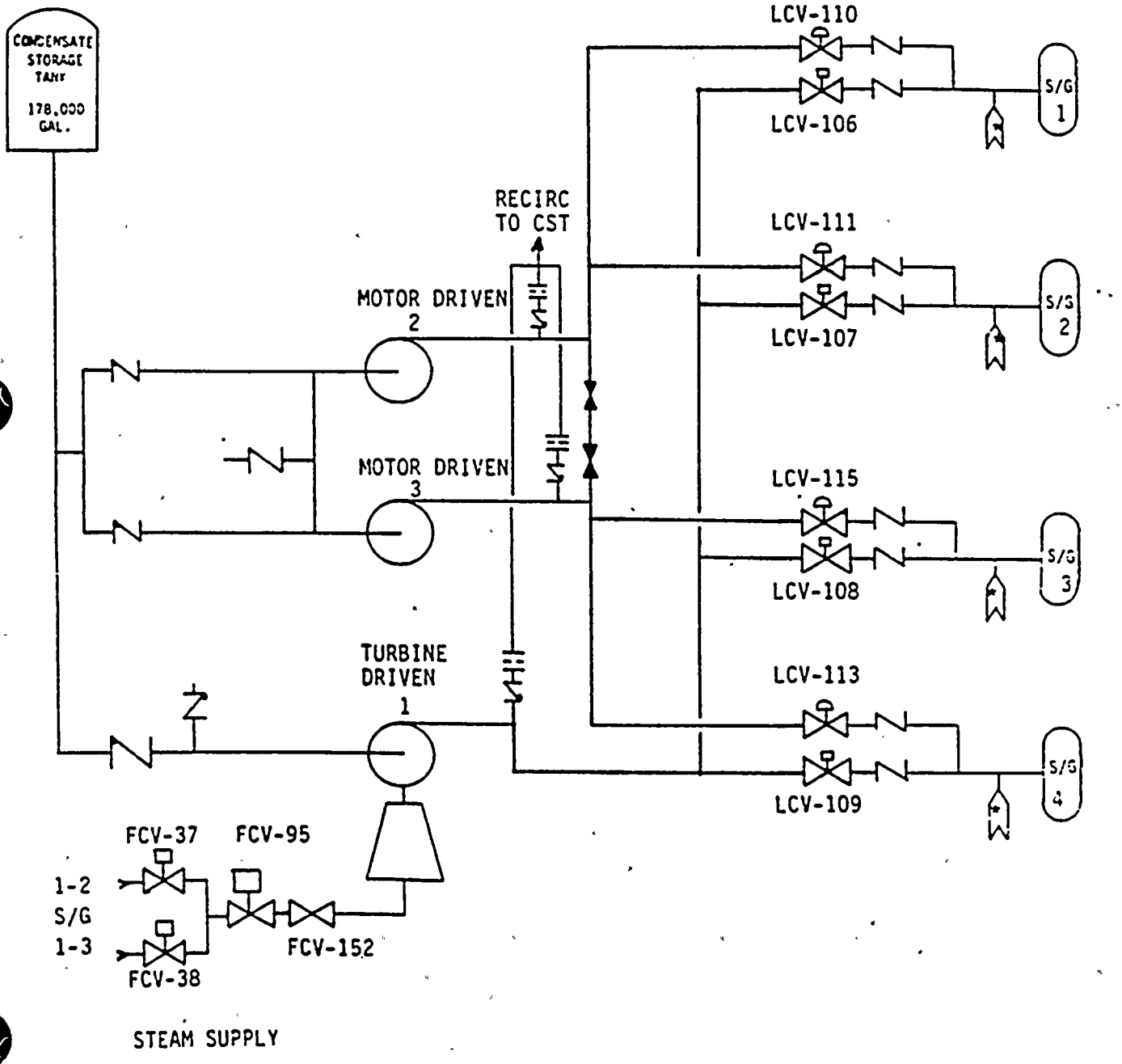

*FROM MAIN FEEDWATER SYSTEM

SAFETY INJECTION SYSTEM

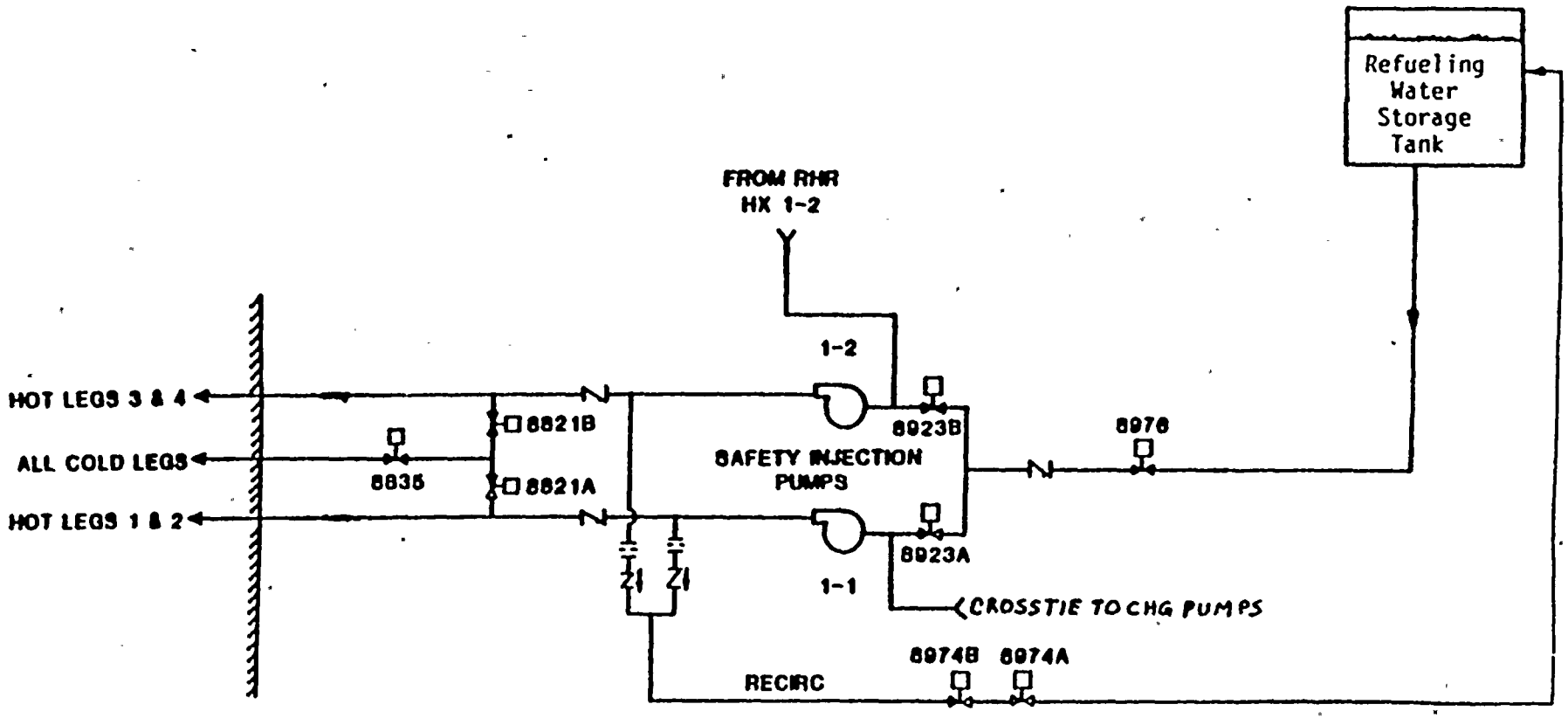

CHARGING and BIT ONE LINE DIAGRAM

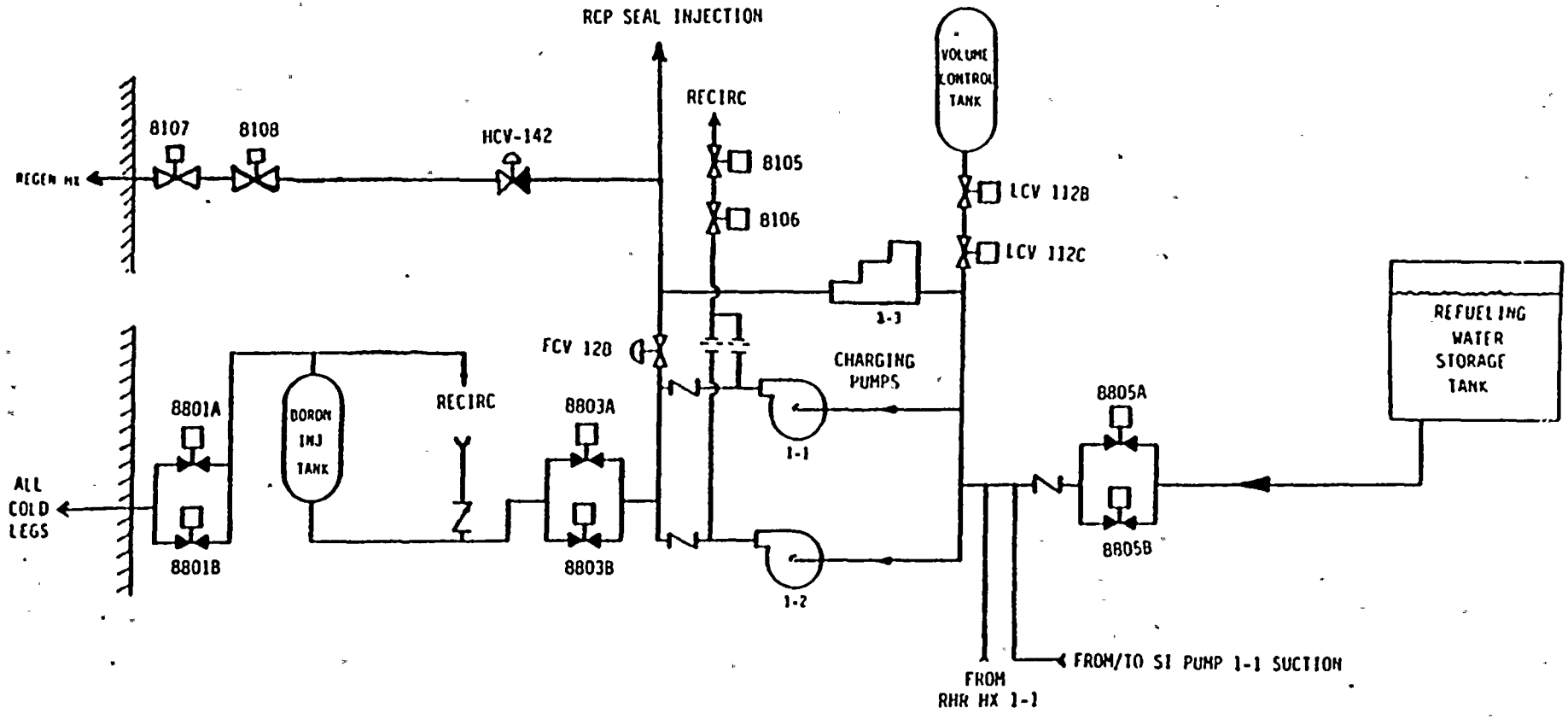

NOTE: Valve position shown is normal at-power lineup w/ ECCS in standby and one centrifugal charging pump in service.