REGULATORY INFORMATION DISTRIBUTION SYSTEM (RIDS)

ACCESSION NBR:8510160151 DOC.DATE: 85/10/11 NOTARIZED: NO DOCKET #
FACIL:50-275 Diablo Canyon Nuclear Power Plant, Unit 1, Pacific Ga 05000275
50-323 Diablo Canyon Nuclear Power Plant, Unit 2, Pacific Ga 05000323
AUTH.NAME AUTHOR AFFILIATION
SHIFFER,J.D. Pacific Gas & Electric Co.
RECIP.NAME RECIPIENT AFFILIATION
KNIGHTON,G.W. Licensing Branch 3

SUBJECT: Informs of review completion of inservice testing program documented in SSER 31.Further discussions required to clarify NRC evaluations of Items 3,4 & 13 in Section 5.2.8.1.Meeting requested for 851104-05 in Bethesda,MD.

DISTRIBUTION CODE: A047D COPIES RECEIVED:LTR 1 ENCL 1 SIZE: 7
TITLE: OR Submittal: Inservice Inspection/Testing

NOTES: 05000275
OL:09/22/81

	RECIPIENT ID CODE/NAME		COPIES LTTR	COPIES ENCL	RECIPIENT ID CODE/NAME		COPIES LTTR	COPIES ENCL
	NRR LB3 BC	01	7	7				
INTERNAL:	ACRS	16	10	10	ADM/LFMB		1	0
	ELD/HDS2		1	0	NRR/DE/MEB	15	1	1
	NRR/DE/MTEB	14	1	1	NRR/DL/TAPMG		1	1
	REG FILE	04	1	1	RGN5		1	1
EXTERNAL:	24X		1	1	LPDR	03	2	2
	NRC PDR	02	1	1	NSIC	05	1	1

TOTAL NUMBER OF COPIES REQUIRED: LTTR 29 ENCL 27

PACIFIC GAS AND ELECTRIC COMPANY

PG&E 77 BEALE STREET • SAN FRANCISCO, CALIFORNIA 94106 • (415) 781-4211 • TWX 910-372-6587

JAMES D. SHIFFER
VICE PRESIDENT
NUCLEAR POWER GENERATION

October 11, 1985

PGandE Letter No.: DCL-85-320

Mr. George W. Knighton, Chief
Licensing Branch No. 3
Division of Licensing
Office of Nuclear Reactor Regulation
U. S. Nuclear Regulatory Commission
Washington, D.C. 20555

Re: Docket No. 50-275, OL-DPR-80
Docket No. 50-323, OL-DPR-82
Diablo Canyon Units 1 and 2
Inservice Testing Program

Dear Mr. Knighton:

PGandE has reviewed the NRC Staff's evaluation of the Diablo Canyon Inservice Testing (IST) Program documented in SSER 31. As a result of our review, PGandE believes that further discussions are required to clarify the NRC Staff's evaluation of items 3, 4 and 13 in Section 5.2.8.1 of SSER 31 which address pump vibration measurement, pump flow measurement, and categorization of check valves in the emergency core cooling system. Regarding item 13, PGandE's basis for classifying certain check valves is provided in the enclosure.

As discussed with the NRC Project Manager, PGandE requests a meeting on items 3, 4 and 13 at Bethesda on November 4 and 5, 1985.

Kindly acknowledge receipt of this material on the enclosed copy of this letter and return it in the enclosed addressed envelope.

Sincerely,

J C Carroll for

J. D. Shiffer

Enclosure

cc: L. Chandler
J. B. Martin
B. Norton
H. E. Schierling
CPUC
Diablo Distribution

A047

0561S/0037K/JHA/469

ENCLOSURE

EMERGENCY CORE COOLING SYSTEM CHECK VALVES

The NRC Staff's evaluation of the Diablo Canyon Inservice Testing (IST) Program is documented in SSER 31. Item 13 in Section 5.2.8.1 of SSER 31 addresses the categorization of check valves in the emergency core cooling system (ECCS); specifically, (1) safety injection to hot legs second-off check valves 8905A, B, C and D, and (2) residual heat removal to hot legs second-off check valves 8740A and B. The NRC's evaluation of these check valves is provided below with PGandE's basis for not reclassifying the valves.

NRC Evaluation (Item 13: SSER 31, pp. 5-6, 5-7)

"PGandE has classified certain check valves in the safety injection system and the residual heat removal system, which perform a pressure boundary isolation function, as Category C valves. These systems, which are connected to the reactor coolant pressure boundary, have design pressures that are below the reactor coolant system operating pressure. The redundant isolation check valves are within the ASME Section III, Class 1 boundary forming an interface between the high and low pressure systems and protect the low pressure systems from pressures that exceed their design limit. In this role, the check valves perform a pressure isolation function. The staff considers the redundant isolation provided by these check valves to be an important safety function and therefore it is necessary to assure the condition of each check valve is adequate to maintain the redundant isolation capability.

Accordingly, the following check valves in the safety injection system and the residual heat removal system shall be reclassified valve category A/C and tested in accordance with Technical Specification 4.4.6.2.2 and included in Table 3.4-1 of the Technical Specifications. These check valves are:

Safety Injection System (SI)
8905A SI to hot leg-1, 8905B SI to hot leg-2,
8905C SI to hot leg-3, and 8905D SI to hot leg-4.

Residual Heat Removal System (RHR)
8740A RHR to hot leg-1, and 8740B RHR to hot leg-2."

PGandE Discussion

As clarified in discussions with the NRC Staff, the Diablo Canyon system design configuration shows that these check valves do not form an interface between high and low pressure systems. The attached FSAR Update figures provide the piping schematics for the safety injection system and the residual heat removal system. These schematics show that, in both cases, the upstream and downstream piping classification is S6, which is nominally rated at 2500 psia. The valves that form the interface between the high and low pressure systems are one valve further upstream in the systems' flow path, i.e., valves 8802A and B for the safety injection system and valve 8703 for the residual heat removal system.

During plant operation, routine performance of Technical Specification Surveillance Requirement 4.5.2 once per shift ensures that valves 8802A, 8802B, and 8703 are closed with the power to their valve operators removed. With power removed, inadvertant operation of these valves is not possible and accidental overpressurization of the safety injection and residual heat removal systems is prevented.

Since check valves 8905A, B, C and D and 8740A and B do not perform a pressure boundary isolation function, and administrative controls are in place to prevent overpressurization of the safety injection and residual heat removal systems, it is not necessary to reclassify these valves as Category A/C as stated in SSER 31. For the same reasons, these valves require neither testing in accordance with Technical Specification 4.4.6.2.2 nor inclusion into Table 3.4-1 of the Technical Specifications.

Attachments: FSAR Update Figure 3.2-09, Sheet 5 (Piping Schematic - Safety Injection System)
FSAR Update Figure 3.2-10, Sheet 1 (Piping Schematic - Residual Heat Removal System)

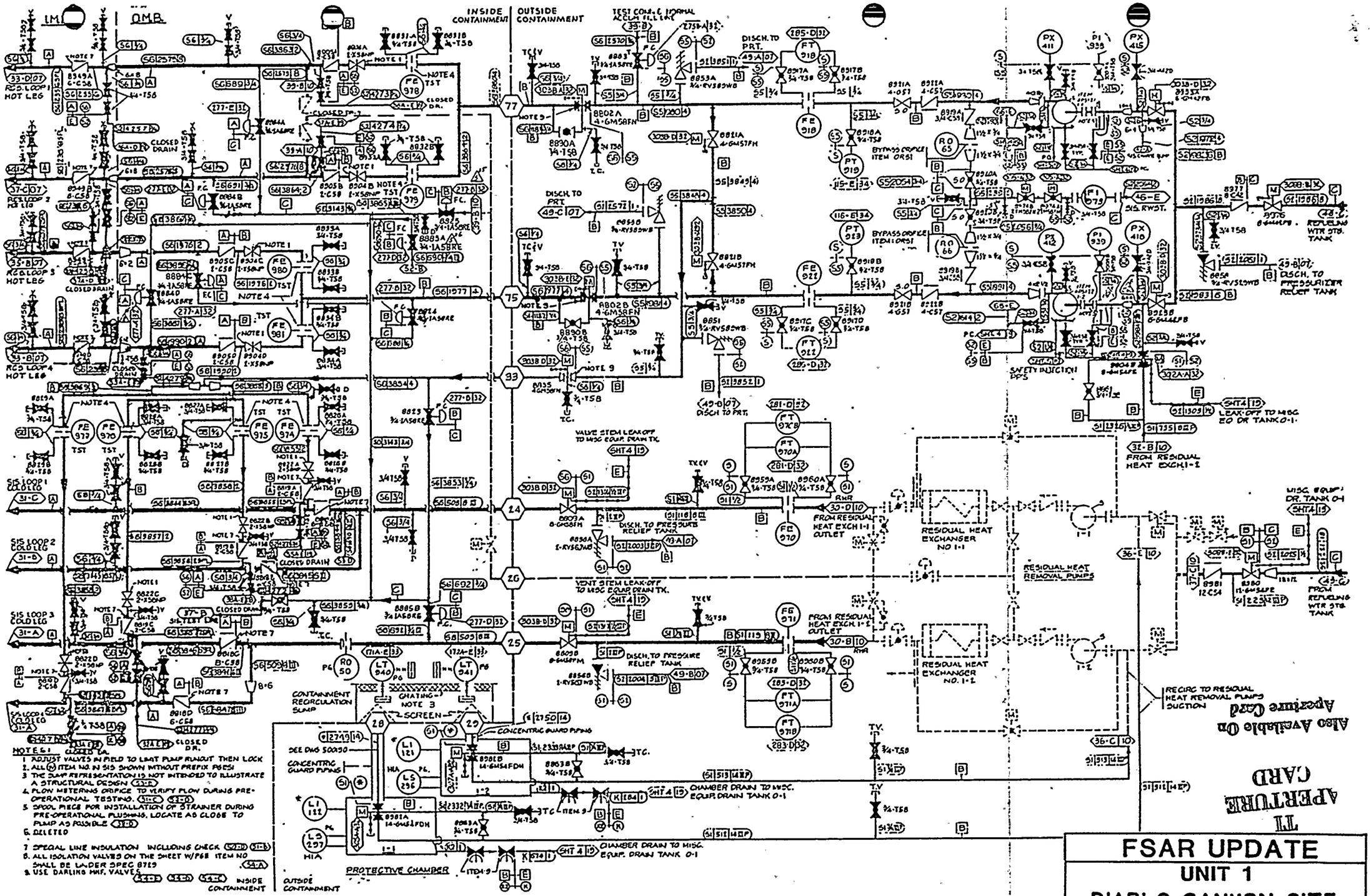

FSAR UPDATE

UNIT 1

DIABLO CANYON SITE

FIGURE 3.2-09 (Sheet 5 of 10)
PIPING SCHEMATIC
SAFETY INJECTION SYSTEM

8510160151-01

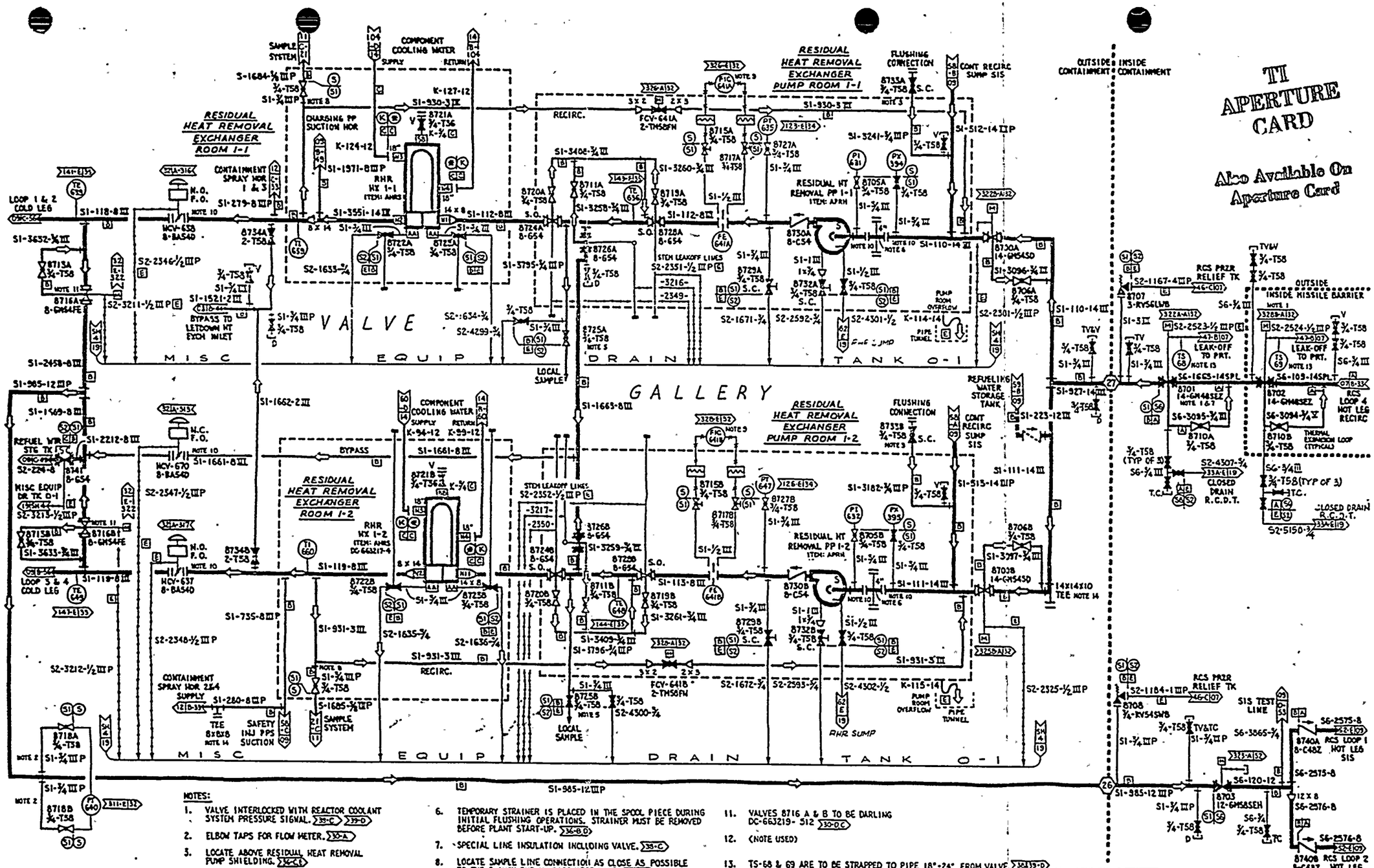

NOTES:

1. VALVE INTERLOCKED WITH REACTOR COOLANT SYSTEM PRESSURE SIGNAL. 35-C 35-D
2. ELBOW TAPS FOR FLOW METER. 30-A
3. LOCATE ABOVE RESIDUAL HEAT REMOVAL PUMP SHIELDING. 36-C,E
4. ALL (W) ITEM NOS ARE SHOWN WITHOUT PREFIX PGE-AC, REFER TO (W) STATUS REPORT
5. LOCATE VALVE OUTSIDE SHIELD WALL. SAMPLE LINE MUST BE AT A LOWER ELEVATION THAN THE 8 INCH PIPE BEING SAMPLED. 34-B,C
6. TEMPORARY STRAINER IS PLACED IN THE SPOOL PIECE DURING INITIAL FLUSHING OPERATIONS. STRAINER MUST BE REMOVED BEFORE PLANT START-UP. 36-B,D
7. SPECIAL LINE INSULATION INCLUDING VALVE. 35-C
8. LOCATE SAMPLE LINE CONNECTION AS CLOSE AS POSSIBLE TO THE 8 INCH RHR HX DISCHARGE LINE. 35-B,E
9. LOCATE ORIFICE FLOW METER INDICATION OUTSIDE OF SHIELD WALL. 35-C,E
10. 300# 316 SS FLANGES 31-B,D & 36-B,D AND 4 PCS FLUSHING SPOOLS FLANGES ON LINE NO 110 & 111.
11. VALVES 8716 A & B TO BE DARLING DC-663219- 512 30-D,C
12. (NOTE USED)
13. TS-68 & 69 ARE TO BE STRAPPED TO PIPE 18"-24" FROM VALVE. 36-39-D
14. PROVISIONS FOR SPENT FUEL POOL COOLING WATER SYSTEM INCREASED CAPACITY. 31-37-B

TI APERTURE CARD

Also Available On Aperture Card

8510160151-02

FSAR UPDATE

UNIT 1
DIABLO CANYON SITE

FIGURE 3.2-10 (Sheet 1 of 6)
PIPING SCHEMATIC
RESIDUAL HEAT REMOVAL SYSTEM

September 1985 Revision 1