REGULATORY INFORMATION DISTRIBUTION SYSTEM (RIDS)

ACCESSION NBR:8309260140 DOC.DATE: 83/09/09 NOTARIZED: NO DOCKET #
FACIL:50-275 Diablo Canyon Nuclear Power Plant, Unit 1, Pacific Ga 05000275
AUTH.NAME AUTHOR AFFILIATION
SCHUYLER,J.O. Pacific Gas & Electric Co.
RECIP.NAME RECIPIENT AFFILIATION
EISENHUT,D.G. Division of Licensing

SUBJECT: Forwards list of unresolved items & response to remaining items of Suppl 18 to SER,per request at 830901 meeting.Items include final verification & completion &/or documentation of some mods.

DISTRIBUTION CODE: B001S COPIES RECEIVED:LTR 1 ENCL 36 ON SHELF SIZE: 69
TITLE: Licensing Submittal: PSAR/FSAR Amdts & Related Correspondence

NOTES:J Hanchett 1cy PDR Documents. 05000275

	RECIPIENT ID CODE/NAME	COPIES LTTR	COPIES ENCL	RECIPIENT ID CODE/NAME	COPIES LTTR	COPIES ENCL
	NRR/DL/ADL	1	0	NRR LB3 BC	1	0
	NRR LB3 LA	1	0	SCHIERLING,H 01	1	1
INTERNAL:	ELD/HDS2	1	0	IE FILE	1	1
	IE/DEPER/EPB 36	3	3	IE/DEPER/IRB 35	1	1
	IE/DEQA/QAB 21	1	1	NRR/DE/AEAB	1	0
	NRR/DE/CEB 11	1	1	NRR/DE/EHEB	1	1
	NRR/DE/EQB 13	2	2	NRR/DE/GB 28	2	2
	NRR/DE/MEB 18	1	1	NRR/DE/MTEB 17	1	1
	NRR/DE/SAB 24	1	1	NRR/DE/SGEB 25	1	1
	NRR/DHFS/HFEB40	1	1	NRR/DHFS/LQB 32	1	1
	NRR/DHFS/PSRB	1	1	NRR/DL/SSPB	1	0
	NRR/DSI/AEB 26	1	1	NRR/DSI/ASB	1	1
	NRR/DSI/CPB 10	1	1	NRR/DSI/CSB 09	1	1
	NRR/DSI/ICSB 16	1	1	NRR/DSI/METB 12	1	1
	NRR/DSI/PSB 19	1	1	~~NRR/DSI/RAB~~ 22	1	1
	NRR/DSI/RSB 23	1	1	~~REG FILE~~ 04	1	1
	RGN5	3	3	RM/DDAMI/MIB	1	0
EXTERNAL:	ACRS 41	6	6	BNL(AMDTS ONLY)	1	1
	DMB/DSS (AMDTS)	1	1	FEMA-REP DIV 39	1	1
	LPDR 03	2	2	NRC PDR 02	1	1
	NSIC 05	1	1	NTIS	1	1
NOTES:		1	1			

TOTAL NUMBER OF COPIES REQUIRED: LTTR 55 ENCL ~~48~~ 12

PACIFIC GAS AND ELECTRIC COMPANY

PG&E 77 BEALE STREET • SAN FRANCISCO, CALIFORNIA 94106 • (415) 781-4211 • TWX 910-372-6587

J. O. SCHUYLER
VICE PRESIDENT
NUCLEAR POWER GENERATION

September 9, 1983

Mr. Darrell G. Eisenhut, Director
Division of Licensing
Office of Nuclear Reactor Regulation
U. S. Nuclear Regulatory Commission
Washington, D.C. 20555

Re: Docket No. 50-275, OL-DPR-76
Diablo Canyon Unit 1
Safety Evaluation Report, Supplement No. 18

Dear Mr. Eisenhut:

The Diablo Canyon Safety Evaluation Report, Supplement No. 18 (SSER 18), identified items which the Staff considered unresolved. Specifically, these items relate to final verification of certain matters including the completion and/or documentation of some modifications.

PGandE responded to most of the unresolved items in a letter to the Staff on August 30 and September 6, 1983. At the public meeting with the Staff in Bethesda on September 1, 1983, PGandE committed to provide closure or status information on the remaining unresolved issues by September 9, 1983.

A list of all unresolved items identified in SSER 18 is provided in Enclosure 1. Enclosure 2 contains PGandE's response to the remaining seven unresolved items.

Sincerely,

B Fleck
for J. O. Schuyler

Enclosures

cc: R. L. Cloud, RLCA
W. E. Cooper, TES
J. B. Martin, NRC
H. E. Schierling, NRC
F. Sestak, Jr., S&W
Service List

B001
1/36

ENCLOSURE 1

This enclosure contains a list of unresolved items identified in SSER No. 18. This list summarizes each item by the SSER section, SSER page location, and a closure or status reference.

ENCLOSURE 1
SAFETY EVALUATION REPORT
SUPPLEMENT NO. 18
STATUS OF UNRESOLVED ITEMS

SER SECTION	DESCRIPTION	PAGE NO./ COMMENTS	CLOSURE/STATUS DOCUMENT
3.2.1	Containment Annulus Structure		
	o Freehand averaging of spectra	C.3-9	Enclosure 2 Attachment 1 PGandE letter to NRC dated 8/30/83
	o 20 Hz cutoff frequency	C.3-9	Enclosure 2 Attachment 1
	o Documentation	C.3-9	ITR-51, Rev. 0 Issued 9/2/83
3.2.2	Containment Interior Structure		
	o Documentation	C.3-13	ITR-54 (Pending)
3.2.3	Containment Exterior Shell		
	o AISC code for containment penetration analysis	C.3-17	Enclosure 2 Attachment 2 PGandE letter to NRC dated 8/30/83
	o Equipment hatch local stress level	C.3-17	Enclosure 2 Attachment 3 PGandE letter to NRC dated 8/30/82
	o Documentation	C.3-17	ITR-54 (Pending)
3.2.4	Auxiliary Building		
	o Floor slab qualification	C.3-22	Enclosure 2 Attachment 4 PGandE letter to NRC dated 8/30/83
	o ACI code	C.3-22	Enclosure 2 Attachment 5 PGandE letter to NRC dated 8/30/83

ENCLOSURE 1
SAFETY EVALUATION REPORT
SUPPLEMENT NO. 18
STATUS OF UNRESOLVED ITEMS

SER SECTION	DESCRIPTION	PAGE NO./ COMMENTS	CLOSURE/STATUS DOCUMENT
3.2.4	Auxiliary Building (continued)		
	o Soil springs		Enclosure 2 Attachment 6 PGandE letter to NRC dated 8/30/83
	o Documentation	C.3-22	ITR-55 (Pending)
3.2.5	Fuel Handling Building		
	o Input from auxiliary building to base of fuel handling building	C.3-26	Enclosure 2 Attachment 7 PGandE letter to NRC dated 8/30/83
	o Degree-of-freedom reduction procedure	C.3-26	Enclosure 2 Attachment 8 PGandE letter to NRC dated 8/30/83
	o Documentation		ITR 57 Rev. 0 Issued 8/02/83 Rev. 1 (Pending)
3.2.6	Intake Structure		
	o Documentation	C.3-29	ITR 58 Rev. 0 Issued 8/10/83 Rev. 1 (Pending)
	o Verify slab modifications	C.3-28	Enclosure 2 Attachment 5

ENCLOSURE 1
SAFETY EVALUATION REPORT
SUPPLEMENT NO. 18
STATUS OF UNRESOLVED ITEMS

SER SECTION	DESCRIPTION	PAGE NO./ COMMENTS	CLOSURE/STATUS DOCUMENT
3.2.8	Turbine Building		
	o Modeling and analysis issues	C.3-36, 37	Enclosure 2 Attachments 9-15 PGandE letter to NRC dated 8/30/83
	o Documentation	C.3-37	ITR-56 (Pending)
3.3.1	Large Bore Piping and Supports		
	o Pipe supports	C.3-48	Enclosure 2 Attachment 16&22 PGandE letter to NRC dated 8/30/83 Enclosure 2 Attachment 2
	o High stress ratios support and nozzle loads	C.3-48	Enclosure 2 Attachment 22 PGandE letter to NRC dated 8/30/83
	o Documentation (Piping)	C.3-48	ITR-59, Rev. 0 Issued 8/20/83 Rev. 1 (Pending)
	o Documentation (Supports)	C.3-48	ITR-60, Rev. 0 Issued 8/18/83 Rev. 1 (Pending)
3.3.2	Small Bore Piping and Supports		
	o Documentation	C.3-57	Enclosure 2 Attachment 17 PGandE letter to NRC dated 8/30/83

ENCLOSURE 1
SAFETY EVALUATION REPORT
SUPPLEMENT NO. 18
STATUS OF UNRESOLVED ITEMS

SER SECTION	DESCRIPTION	PAGE NO./ COMMENTS	CLOSURE/STATUS DOCUMENT
3.3.2	Small Bore Piping and Supports (continued)		
	o Documentation (Small bore piping)	C.3-58	ITR-61 Rev. 0 (Pending)
	o Documentation (Supports)	C.3-58	ITR-60 Rev. 0 Issued 8/18/83 Rev. 1 (Pending)
3.4.1	Mechanical Equipment and Supports		
	o Qualification of equipment	C.3-59 C.3-70	Enclosure 2 Attachment 4
	o Nozzle-to-pipe interface	C.3-66	ITR-67
	o Pumps flanges	C.3-69	Enclosure 2 Attachment 24 PGandE letter to NRC dated 8/30/83
	o Documentation	C.3-70	ITR-67 Rev. 0 Issued 8/15/83 Rev. 1 (Pending)
3.4.2	HVAC Equipment		
	o Documentation	C.3-73	ITR-31 Rev. 1 Issued 8/4/83
	o Documentation (HVAC ducts/supports)	C.3-73	ITR-63 Rev. 0 Issued 8/23/83 Rev. 1 (Pending)

ENCLOSURE 1
SAFETY EVALUATION REPORT
SUPPLEMENT NO. 18
STATUS OF UNRESOLVED ITEMS

SER SECTION	DESCRIPTION	PAGE NO./ COMMENTS	CLOSURE/STATUS DOCUMENT
3.4.3	Electrical Raceways, Instrument Tubing and Supports		
	o Cable tray qualification	C.3-80	Enclosure 2 Attachment 18 PGandE letter to NRC dated 8/30/83
	o Superstrut welds	C.3-80	Enclosure 2 Attachment 19 PGandE letter to NRC dated 8/30/83
	o Documentation (Raceways/supports)	C.3-76	ITR-63 Rev. 0 Issued 8/23/83 Rev. 1 (Pending)
	o Documentation (Tubing/supports)	C.3-77	ITR-63 Rev. 0 Issued 8/23/83 Rev. 1 (Pending)
3.5.1	Soils and Foundations		
	o Documentation (Soils intake structure)	C.3-83	ITR-58, Rev. 1 (Pending)
	o Documentation (Soils intake structure - bearing capacity, etc.)	C.3-85	ITR-58, Rev. 1 (Pending)
	o Documentation (Soils intake structure - sliding)	C.3-86	ITR-58, Rev. 1 (Pending)
	o Documentation (HLA soils work)	C.3-83-86	ITR-68 (Pending)

ENCLOSURE 1
SAFETY EVALUATION REPORT
SUPPLEMENT NO. 18
STATUS OF UNRESOLVED ITEMS

SER SECTION	DESCRIPTION	PAGE NO./ COMMENTS	CLOSURE/STATUS DOCUMENT
3.5.2	Shake Table Testing		
	o Documentation (CAP - equipment)	C.3-89	ITR-67 Rev. 0 Issued 8/15/83 Rev. 1 (Pending)
3.5.3	Main Control Board		
	o Staff acceptance	C.3-91	Enclosure 2 Attachment 23 PGandE letter to NRC dated 8/30/83 and PGandE letter to NRC dated 9/6/83
3.6.6	Seismic and Stress Analysis of Buried Diesel Tanks		
	o DCP analysis	C.3-99	Enclosure 2 Attachment 20 Revised report sent to NRC; PGandE letter to NRC dated 8/19/83
4.2.3	Instrumentation and Controls Design		
	o EOI 8018 AFWS isolation valves	C.4-11	Enclosure 2 Attachment 21 PGandE letter to NRC dated 8/10/83
	o EOI 8047 - acceptability of single relay to isolate steam generator blowdown	C.4-12	Enclosure 2 Attachment 3

ENCLOSURE 1
SAFETY EVALUATION REPORT
SUPPLEMENT NO. 18
STATUS OF UNRESOLVED ITEMS

SER SECTION	DESCRIPTION	PAGE NO./ COMMENTS	CLOSURE/STATUS DOCUMENT
4.3.2	System Design Pressure/ Temperature and Differential Pressure Across Power-Operated Valves		
	o Modifications	C.4-26	Enclosure 2 Attachment 6
4.3.5	Jet Impingement Effects Inside Containment		
	o Documentation	C.4-29 Fuel load requirements have been satisfied	Enclosure 2 Attachment 7
4.3.6	Rupture Restraints		
	o Documentation (Outside containment)	C.4-32 Fuel load requirements have been satisfied	Enclosure 2 Attachment 25 PGandE letter to NRC dated 8/30/83
	o Documentation (Inside containment)	C.432 Fuel load requirements have been satisfied	Enclosure 2 Attachment 25 PGandE letter to NRC dated 8/30/83

ENCLOSURE 2

This enclosure contains information which addresses potential unresolved items extracted from SSER No. 18. The information provided is considered by PGandE to resolve these items and is provided for review, as appropriate. Information for each item is provided on an individual attachment. Each attachment contains a reference, the identification of the unresolved item, and a response to the identified item. No further action on these issues is contemplated by the Project at this time, with the exception of 1) revising or supplementing the Phase I and II Final Reports at a future date, if appropriate, or 2) completion of evaluations and/or modification work, and documentation of said work.

ENCLOSURE 2

Attachment 1

CONTAINMENT ANNULUS STRUCTURE

20 Hz cutoff frequency

A. REFERENCE

Containment Annulus Structure
SER Section 3.2.1.6, p. C.3-9

B. POTENTIAL UNRESOLVED ITEM

"It is noted, however, that a frequency of 20 Hz should not be considered as a frequency in the rigid range without verification. The Newmark Hosgri spectra approach ZPA at 33 Hz. It is the staff's position that use of the 20 Hz cutoff frequency for generation of floor response spectra should be verified and/or justified. With the exception noted, the results should lead to the acceptance of the annulus steel structure if the the program was carried out properly. The IDVP review will verify the accuracy of the DCP program."

"The staff considers the 20 Hz cutoff frequency for generation of floor response spectra an open issue and will require that the IDVP review verifications and/or justifications provided by the DCP and include the results of review in future reports."

C. DCP RESPONSE

Horizontal stiffness of the annulus steel being considered rigid by having a frequency beyond 20 Hz is based on the following rationale:

(1) At the time of the Hosgri evaluation, the NRC Staff and its consultants, and PGandE and their consultants agreed the evaluation would be based on the same mathematical models and analytical procedures as were used for the DDE with certain specific exceptions. Since no exception was given in the Hosgri report, the Hosgri evaluation of the annulus steel was performed to the same criteria and using the same mathematical models and analytical procedures as for the DDE evaluation. For the annulus structure, this DDE analysis, as described in the FSAR, was based on the motions of the interior concrete crane wall without additional amplification. Thus, the horizontal stiffness of the annulus was considered rigid, i.e., transmit motion without amplification. This degree of rigidity, as defined in the FSAR for pipe support structures, systems, and components is 20 Hz. This same set of assumptions and considerations was carried forward for the Hosgri evaluation as permitted by the Hosgri report.

C. DCP RESPONSE (continued)

(2) The annulus steel is a structure specifically designed to support piping. The stiffness requirements for pipe support structures for the DDE analysis as well as the Hosgri analysis is clearly defined in the FSAR and Hosgri Reports as 20 Hz.

This agreed upon criteria, i.e., being considered rigid by having a fundamental frequency greater than 20 Hz, is entirely reasonable and appropriate for the safety evaluation of the supported systems and components for the following reasons:

- Dominant modes of piping and raceways generally have frequencies in the 5 to 15 Hz range. These modes are dominant for either or both of the following reasons. First, the highest amplification in the horizontal floor response spectra occurs in this range. Second, the participation factor of the modes in the 5 to 15 Hz range are normally higher than those of the higher modes. In the cases where modes with frequencies greater than 15 Hz have larger participation factors than those of lower modes, the system is quite stiff which results in considerable inherent structural capacity.

- The strain associated with modes having frequencies higher than 20 Hz is quite small. For example, the natural frequency of a single mass oscillator is $f = 3.13/\sqrt{D}$, where D is the static deflection in inches of the mass subjected to a 1.0 g loading and f is in cycles per second. The deflection of a 20 Hz oscillator to a 1.0 g load is 0.0245 inches, which for the span and size of piping and raceways considered results is a small strain. A conservative estimate of the acceleration from a coupled analysis of the annulus steel and the piping or raceway for modes having a frequency greater than 20 Hz is 3.0 g. The deflection associated with a 20 Hz mode experiencing 3.0 g would be approximately 0.064 inches. Such a deflection could not cause serious problems for raceways or piping and these are the items supported by the annulus steel.

- For conduits or piping where the modes having frequencies greater than 20 Hz are combined with lower modes, the effects are combined by the SRSS. This tends to reduce the significance of a nondominant mode. If, for example, there is one dominant mode below 20 Hz which produces a stress of 20 ksi and a mode above 20 Hz which produces a stress of 5 ksi, the combined stress is 20.6 ksi. Further, if there are four modes below 20 Hz and all are producing 5 ksi individually, the combined stress, excluding the higher mode, would be 10 ksi. The combined stress, including the higher mode, would be 11.2 ksi. This indicates the increase in stress due to inclusion of the higher modes causes only a small increase in the combined seismic stress.

C. DCP RESPONSE (continued)

- Piping supports for Diablo Canyon have a stiffness of 20 Hz which results in a certain amount of toughness above that of supports designed on the basis of strength only. A number of plants designed in the late 60's and early 70's did not have any specific stiffness requirement for pipe supports. Thus, the design of Diablo Canyon's pipe supports is already more conservative than typical industry practice for this vintage plant.

- The piping and raceway analysis is based on an uncoupled linear elastic analysis. Tests have demonstrated behavior to be nonlinear and designs based on linear analysis with traditional low damping values to be quite conservative. For piping, if the actual behavior of the supports are taken into consideration, it is apparent that the linear elastic analysis is a conservative idealization of the actual behavior. The actual gaps that exist at some supports are neglected. This results in more of the actual building motion being transmitted to the pipe than actually takes place. In reality, the pipe will tend to have relative movement between the pipe and supports where the gaps exist, which tends to reduce the input motion into the piping system and also tends to prevent a resonant condition from developing. In addition, some supports allow sliding to take place between the support and the pipe. The frictional behavior is also neglected, which, if included, would tend to reduce resonant conditions. The uncoupled analysis using response spectra as input has been recognized as a conservative approach when the weight of the supported items is above a few percent of the supporting structure. In the case of the piping and raceway systems, the percentage is high, relative to the annulus steel. Therefore some unquantified margin exists.

When the Hosgri criteria were developed from many and lengthy discussions between the NRC Staff, PGandE and its respective consultants, the above considerations, and perhaps others not explicitly mentioned, influenced the collective engineering judgment. Engineering judgment is, in fact, necessary in such a process due to the nature of seismic design. Based on all of the considerations outlined above, it is concluded that the 20 Hz criteria for definitions of rigid range for the horizontal response of the annulus structure is a reasonable and appropriate basis for evaluation of the piping, systems, and components supported by the annulus steel.

ENCLOSURE 2

Attachment 2

LARGE BORE PIPING AND SUPPORTS

Buckling criteria (IDVP action)

A. REFERENCE

Large Bore Piping and Supports
SER Section 3.3.1.4, p. C.3-48

B. POTENTIAL UNRESOLVED ITEM

"The IDVP should evaluate and justify the buckling criteria specified for linear supports, specifically the rise of the Euler buckling equation for calculating the critical buckling load for all slenderness ratios."

C. DCP RESPONSE

The Project offers the following clarification of buckling criteria used for linear type supports.

Supplementary steel used in Diablo Canyon pipe supports has been designed to satisfy the requirements of the AISC Manual of Steel Construction, 7th Edition for the normal and DE load cases. For the DDE and Hosgri load cases, a 1/3 increase is permitted over normal allowables.

For columns with a slenderness ratio (Kl/r) less than C_c (column slenderness ratio separating elastic and inelastic buckling $\sqrt{2\pi^2E/F_y}$), the AISC assumes failure by inelastic buckling and limits the allowable stress to a value less than the value that would be permitted by factoring (2/3) the Euler formula.

By using AISC as a basis for design and review of pipe support supplementary steel, the Project has accounted for effects that may cause failure of columns at stress levels below the value predicted by the Euler formula. This approach is consistent with industry practice.

ENCLOSURE 2

Attachment 3

INSTRUMENTATION AND CONTROLS DESIGN

EOI 8047 - acceptability of single relay to isolate steam generator blowdown

A. REFERENCE

Auxiliary Feedwater System
SER Section 4.2.3.1, p. C.4-12

B. POTENTIAL UNRESOLVED ITEM

"The staff...finds that the use of a single relay to isolate steam generator blowdown on automatic initiation of the AFWS is in conflict with the design shown in FSAR Figure 7.2-1, Sheet 15. Further, the redundancy, as shown by this figure, typical for all Westinghouse plants, is consistent with the Westinghouse analysis noted above which assumes that steam generator blowdown is terminated for those events not associated with safety injection. The staff concludes that the concern identified does represent a deviation from the Westinghouse interface requirements to be implemented by the balance-of-plant design."

"The staff will pursue this concern with PGandE to obtain a resolution of this matter."

C. DCP RESPONSE

The Staff indicates a concern about "... a deviation from the Westinghouse interface requirements to be implemented by the balance of plant design" with respect to the use of a single relay to isolate steam generator blowdown on automatic initiation of the Auxiliary Feedwater System (AFWS). The specific issue is identified in the FSAR. Figure 7.3-47 (Attachment 1) indicates that a single relay (3AFWP) initiates steam generator blowdown isolation, while FSAR Figure 7.2-1 (Attachment 2) indicates that redundant relays initiate isolation.

The design criteria in the Westinghouse "Steam System Design Manual", Rev. 0, Subsection V-8 (Attachment 3), simply requires that, upon initiation of the AFWS, the blowdown valves will automatically close; redundant relays are not specified. The PGandE design fully conforms to the design criteria, using a single relay (3AFWP) to meet the requirement of automatic closure of the blowdown valves. Additionally, the PGandE design has been reviewed on various occasions by Westinghouse to ensure that the PGandE design conforms to the criteria. Attachments 4, 5, 6, 7 and 8 illustrate this review process. Attachments 7 and 8 specifically document that Westinghouse reviewed the PGandE design and concurred that the design with a single relay meets their steam generator blowdown isolation criteria.

C. DCP RESPONSE (continued)

This response provides documentation which demonstrates that the concern identified by the NRC staff clearly does not represent a deviation from the Westinghouse interface requirements to be implemented by the balance-of-plant design.

However, to close this issue in a timely manner, PGandE will install a redundant relay for steam generator blowdown isolation on auxiliary feedwater pump start as shown in FSAR Figure 7.2-1. FSAR Figure 7.3-47 will be updated to reflect the redundant relay.

SUBSECTION 8 - STEAM GENERATOR BLOWDOWN AND SAMPLE SYSTEM

PURPOSE

The steam generator blowdown and sample system is used in conjunction with the chemical feed system to control the chemical composition of the steam generator shell water within the specified limits (Section 4.1 of "General Design Criteria for Power Plant and Steam Systems Associated with Nuclear Steam Supply Systems"). The blowdown discharge is normally flashed in an atmosphere vented tank and the remaining liquid drained into the circulating water discharge. This constitutes a potential release path to the environment even though three barriers exist between the fission products and the blowdown, and so a means of monitoring and controlling the blowdown is an integral feature of the system design.

FUNCTIONAL REQUIREMENTS

To fulfill the two-fold monitor and control purpose, the system includes continuous radiological monitoring and chemical analyzing, manual sampling, and protective isolation valving. The usual analyzing devices consist of conductivity cells and manual sample points for each steam generator. These are associated with the control of the individual steam generator water chemistry. The monitoring function is provided by a radiation monitor which senses flow from all steam generators. If radioactivity is sensed, all discharge from this system is contained by closing the various valves and a control room alarm is sounded since this is an indication that radioactive material is present in the steam generator secondary side.

SAFETY REQUIREMENTS

The safety aspect mainly centers around the monitoring for radioactivity in the blowdown liquid. The monitor is to be in operation, with all steam generators being sampled, before any blowdown is performed.

The part of the system from the steam generators to the isolation valves, outside of the containment, comprises an extension of the steam generator boundary. This portion of the system therefore has a safety classification since it is necessary to the safe shutdown of the plant. The balance of the system, downstream of the isolation valves, does not have this higher classification since blowdown can be discontinued for an emergency cooldown. The blowdown and sample lines within the containment require reactor coolant system missile protection similar to the feed and steam lines to avoid any intereffect between a loss of coolant accident and a steam or feedwater break.

SYSTEM DESIGN DESCRIPTION

Figure V-34 shows a system design with one steam generator, although it is typical for whatever number exists. Additional steam generators would be in parallel, all feeding samples through a common radiation monitor. Individual coolers, manual samples, and conductivity reading would be used.

The isolation valve requirements on the lines penetrating the containment depend upon individual plant requirements; however, our interpretation of the usual containment isolation is shown in Figure V-34, where the blowdown and sample lines have a manual and an automatic isolation valve immediately outside the containment.

These automatic valves are of a fail close design, are normally open, and blowdown is manually regulated with the valve located near the flash tank, although through control room manual action the automatic valve can be used to provide an on-off blowdown operation mode with the regulation valve set for a given rate. The tank is vented to the atmosphere and the liquid drained to the discharge canal. A normally closed alternate route to the waste disposal system is also shown. If fission product release into the steam generators's secondary side were to occur, this connection provides the abiltiy to drain the steam generator contents after shutdown to enable corrective maintenance to be done. The blowdown tank and lines do not require special protective radiological shielding.

The sample lines are shown taken off the blowdown lines as close to the steam generator as practical and brought out through separate containment penetrations. This is considered necessary in order to provide representative chemical samples and satisfactory radioactivity control. For the same reasons, the sample tubing size is expected to be small in order to reduce lag time. Containment isolation valves are located in the lines immediately outside the containment. The sample is cooled and then has three parallel paths; one is available for manual sampling in the sample hood and sink inside the nuclear sample room, the second to a conductivity cell outside the sample room, and the third joins the other steam generator samples and goes through a radiation monitor. The temperature and pressure limits for the radiation monitor are 140°F and 150 pounds per square inch guage, respectively, and the fluid condition must be maintained below these levels. The constant flow from the conductivity cells and the radiation monitor is piped back to the blowdown tank.

A demineralized water line is shown for the purpose of flushing the radiation monitor. This will be useful in verifing monitor signals and for sensor calibration.

It should be noted that there are four valves per steam generator, two within the containment and the two immediately outside. If the latter require repair because of leaks, a plant cooldown and draining of the steam generator is required. We recommend that high quality seal welded bonnet valves be specified for these locations, rather than routine field-procurred valves, in order to minimize the possibility of this occurrence. These valves are marked with an asterisk in Figure V-34.

CONTROL

Blowdown rate is under the operator's control using the valves near the blowdown tank, although the isolation valves can be utilized from the control room for on-off blowdown control. The isolation valves on the blowdown tank discharge are controlled by various automatic signals as well, as shown in Figure V-35.

The blowdown isolation valves are closed automatically by one one of these signals: a signal from the radiation monitor, a containment isolation signal, and an initiating start signal of the auxiliary feedwater system.

The sample isolation valve is automatically closed upon the radiation monitor signal or by containment isolation. It has an additional feature, however, the ability to obtain a manual sample following a radiation monitor alarm. This ability is desirable since that means the responsible steam generator can be definitely identified. A manual switch shown is for this purpose. It would be located within the sample room and would override only the radiation signal and would not interfere with containment isolation.

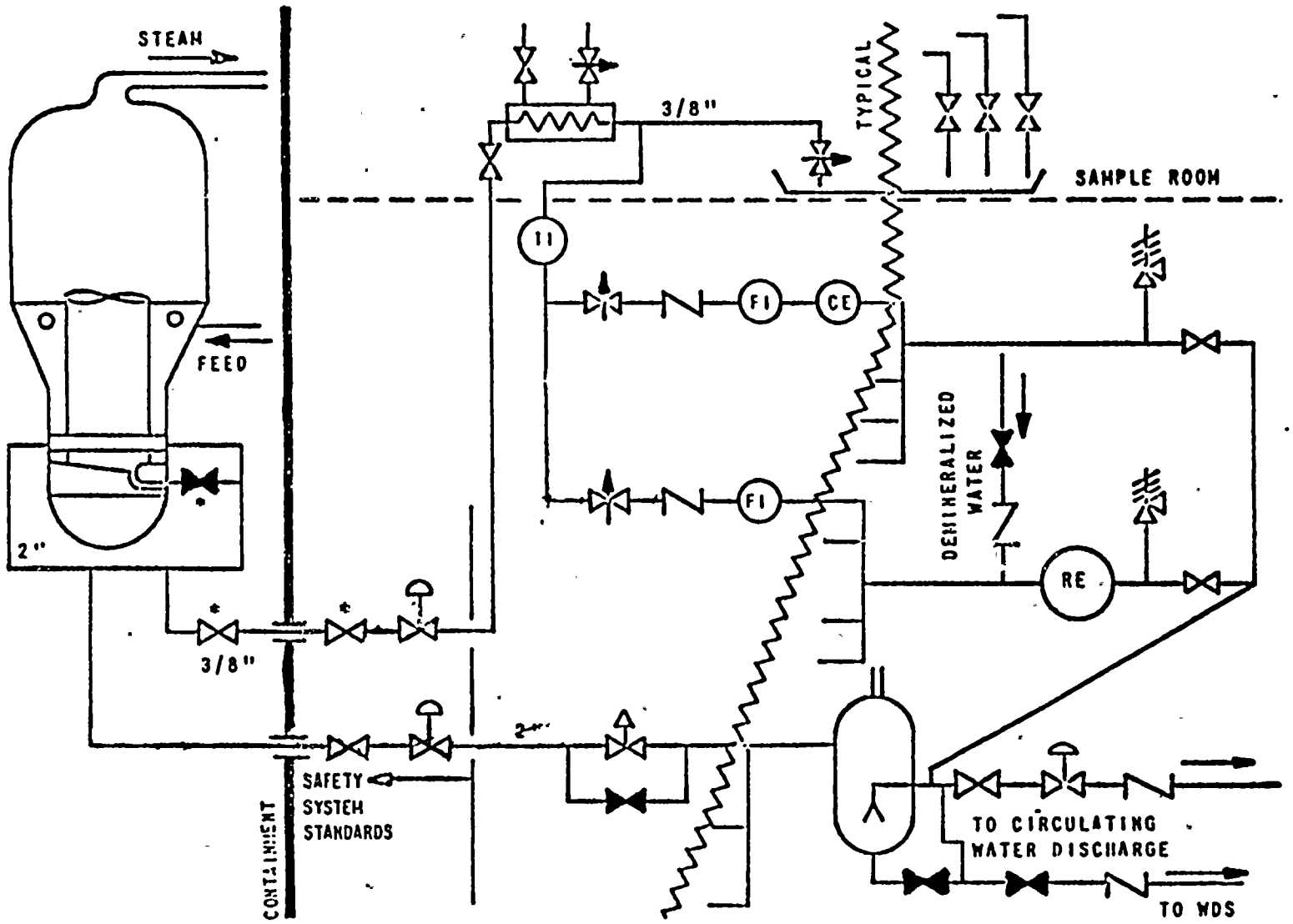

Figure V-34. Typical Blowdown and Sample System Design

1703-19

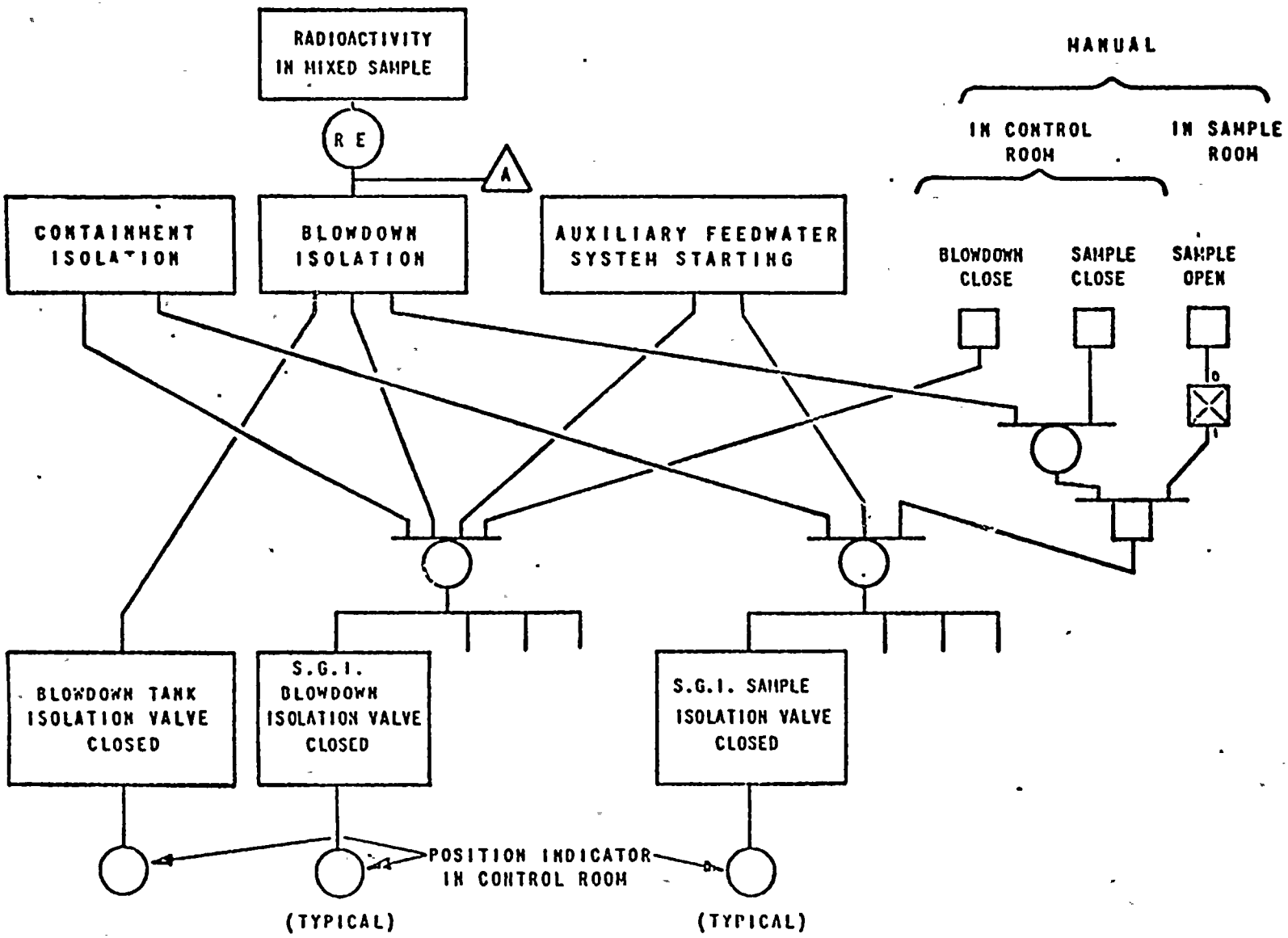

Figure V-35. Blowdown and Sample System Logic Diagram

ATTACHMENT 4

Westinghouse Electric Corporation Power Systems

PWR Systems Division
Box 355
Pittsburgh Pennsylvania 15230

2/27/73

PGE-2235
SSE-PGE-5075
S.O. PGE-500

Mr. D. V. Kelly
Chief Mechanical Engineer
PACIFIC GAS AND ELECTRIC COMPANY
77 Beale Street
San Francisco, CA 94106

Dear Mr. Kelly:

PACIFIC GAS AND ELECTRIC COMPANY
NUCLEAR PLANT, DIABLO CANYON SITE
UNITS NUMBER 1 AND 2
Criteria Evaluation

Attached is the Steam Systems Criteria Compliance document which is being submitted for your use and our information.

Basically, the tabulation states the latest criteria relating to the secondary plant design for the Westinghouse Nuclear Steam Supply System. The document also references applicable design manuals which you have in your possession. The references explain the criteria in greater detail.

We request that you check your plant design with the criteria listed for our information. If your design meets the criteria, would you please initial your verification. Our objective is to obtain a document for our information in which the column entitled "Verification of Compliance" is completed and we will be able to help you in this endeavor. For the equipment Westinghouse is supplying, we will sign the verification column.

The object of the exercise, as far as your plant is concerned, is to use this data to discover any areas which could be potentially troublesome and offer you our help in trying to resolve these difficulties.

Since this is the first issue we would appreciate any comments for improvement. For convenience, you may wish to insert this into your Steam Systems Design Manual. If we can be of any help in clarification of criteria, we are available for further discussion. When the document is completed please forward a copy for our use and files.

Very truly yours,

C Y Liang

C. Y. Liang
Steam Systems Engineering

APPROVED: A. J. Bjuegin p.p.
J. W. Dorrycott, Manager
Pacific Gas and Electric
Project

DTP/dj
Attachment

cc: D. V. Kelly - 6L, 5A
J. A. Hughes - 1L
R. L. Mellers - 1L

STEAM SYSTEMS CRITERIA COMPLIANCE

ITEM NUMBER	CRITERIA	DESIGN MANUAL REFERENCE	VERIFICATION OF COMPLIANCE
B.2.f	When any auxiliary feed pump starts, the blowdown and sample valves automatically close	SSDM - Section V-8 Page 31 of 45	
B.2.g	Local control is provided for all valves in the auxiliary feedwater system which are operable from the control room (with the exception of the recirculation valves)	SSDM - Section V-7 Page 7 of 13	
B.2.h	All valves and pumps in the auxiliary feedwater system which can be operated from the control room provide for local control to override remote control. When remote control is overridden, an annunciator alarms in the control room	SSDM - Section V-7 Page 7 of 13	
B.2.i	Sufficient instrumentation and controls (both local and remote) allow adequate monitoring of the auxiliary feedwater system state	SSDM - Section V-7 Page 7 of 13	

ATTACHMENT 5

October 17, 1973

W Steam System Design
Criteria Verification
File No. 140.000
PG&E P.O. 22-A-8700-8, Spec. 8700
Supplier Job No. 69000
Unit 1 - Diablo Canyon Site
Project Letter No. 1630

Mr. Joseph Dorrycott
Westinghouse Nuclear Energy Systems
PWR Systems Division
P.O.Box 355
Pittsburgh, Pennsylvania 15230

Dear Mr. Dorrycott:

Please find attached a copy of your SEE-SP-15 - "Steam Systems Criteria Compliance" sent to us with your letter PGE-2235. We find we meet most all of the Steam System Criteria but not all. Please review our replies and comment on the acceptability of our systems.

Very truly yours,

W. V. KELLY
Chief Mechanical & Nuclear Engineer

By: M.M. Laverty

TJDaly/sam
Attachment
cc: File 18.25
MLMeliers/W, SF

0 1 1 0 2 0 1 1 / 3 1

ATTACHMENT 6

Westinghouse Electric Corporation Power Systems

PGE Lakeside Drive
Box 355
Pittsburgh Pennsylvania 15230

DIABLO CANYON
Unit #1 & #2
☐ Original
File: 1/3.000

☑ Copy For:
☐ Eng. File
☑ File 1.13
☐ JEC ☐ 1/2
☐ PVB ☐ —
☐ MHC ☐ —

3/27/74
PGE-2622
FED-II-PGE-337
S.O. PGE-500
Ref: PGE Project Letter No. 1630

Mr. D. V. Kelly
Chief Mechanical Engineer
PACIFIC GAS AND ELECTRIC COMPANY
77 Beale Street
San Francisco, CA 94106

Dear Mr. Kelly:

PACIFIC GAS AND ELECTRIC COMPANY
NUCLEAR PLANT, DIABLO CANYON SITE
UNITS NUMBER 1 AND 2
Steam Systems Criteria Compliance

We have reviewed the subject document attached to the reference letter with following comments:

1. Items A.1.d, A.2.k and C.1.f are not responded in the document. Please send further information for these open items when they are available.

2. Item F.1.b requires a verification to the plant compressed air system electric power supply to ensure that it can be manually loaded on the emergency power supply (Diesels) during station blackout.

3. Item B.1.b indicates that the system design does not meet W criteria; please refer to W SSDM Section V-7, Page 3 of 13 for further consideration of the system design.

Very truly yours,

C. Y. Liang

C. Y. Liang, Engineer
Fluid Systems Design II

CYL/djs

cc: D. V. Kelly 6L
J. A. Hughes 1L
R. L. Mellers 1L

APPROVED: P. Blair for

J. W. Dorrycott, Manager
Pacific Gas and Electric Project

0001-2497

ATTACHMENT 7

PGE-5389

Westinghouse Electric Corporation

Water Reactor Divisions

Nuclear Operations Division

Box 355
Pittsburgh Pennsylvania 15230

August 3, 1983

J. V. Rocca
Chief Mechanical Engineer
Pacific Gas & Electric Company
c/o Bechtel Power Corporation
Diablo Canyon Project
45 Fremont Street, 10th Floor, Room D28
San Francisco, CA 94602

Ref: 1) W ltr. PGE-2235
2) PGE ltr. 1630
3) W ltr. PGE-2622

Attention: J. J. McCracken

PACIFIC GAS AND ELECTRIC COMPANY
NUCLEAR PLANT, DIABLO CANYON UNIT 1 and 2
Steam Generator Blowdown Isolation Design Criteria

Dear Mr. Rocca:

As requested by a telephone discussion, this letter is to summarize the documentation of the Westinghouse design criteria and PG&E implementation for Diablo Canyon steam generator blowdown isolation.

The design criteria for steam generator blowdown isolation is specified in the Westinghouse "Steam Systems Design Manual". The scope of design for this area is the responsibility of the customer/AE. Westinghouse, in our Functional Diagrams, identifies a preferred (by Westinghouse) method of implementing this criteria.

In order to verify implementation of this Westinghouse criteria and other steam systems criteria, Westinghouse in reference 1) forwarded "Steam Systems Criteria Compliance", SSE-SF-15 to PG&E. The verification sections of SSE-SF-15 were completed by PG&E. In particular, PG&E verified compliance with the Westinghouse steam generator blowdown isolation criteria in item B.2.f. The completed SSE-SF-15 was forwarded to Westinghouse in reference 2). Westinghouse documented its review of the completed SSE-SF-15 in reference 3). In particular, Westinghouse had three comments (later resolved) in reference 3), none of which related to steam generator blowdown isolation. Therefore, Westinghouse concurred that the PG&E implementation met the Westinghouse steam generator blowdown isolation criteria.

ATTACHMENT 8

PGE-5492

Westinghouse Electric Corporation

Water Reactor Divisions

Nuclear Operations Division

Box 355
Pittsburgh Pennsylvania 15230

September 6, 1983

Ref: PGE-5389

J. V. Rocca
Chief Mechanical Engineer
Pacific Gas & Electric Company
c/o Bechtel Power Corporation
Diablo Canyon Project
45 Fremont Street, 10th Floor, Room D28
San Francisco, CA 94602

Attention: J. J. McCracken

PACIFIC GAS AND ELECTRIC COMPANY
NUCLEAR PLANT, DIABLO CANYON UNITS 1 and 2
Steam Generator Blowdown Isolation

Dear Mr. Rocca:

The referenced letter described the documentation of the Westinghouse design criteria and the related Pacific Gas & Electric (PG&E) implementation for Diablo Canyon steam generator blowdown isolation. To provide further clarification, the Westinghouse criterion for steam generator blowdown isolation is "The blowdown isolation valves are closed automatically by one of these signals: a signal from the radiation monitor, a containment isolation signal and an initiating start signal of the auxiliary feedwater system" (Steam Systems Design Manual, WCAP 7451, February, 1970). The Westinghouse criterion does not require redundancy. The PG&E design for Diablo Canyon steam generator blowdown isolation, as shown in Figure 7.3-47 of the Diablo Canyon FSAR meets this criterion.

Very truly yours,

WESTINGHOUSE ELECTRIC CORPORATION

John C. Hoebel

John C. Hoebel, Manager
Pacific Gas and Electric Project

JH/rcc/2979D

cc: J. V. Rocca IL
J. E. Murphy (W San Francisco Office) IL
J. B. Hoch IL
B. S. Lew IL

ENCLOSURE 2

Attachment 4

MECHANICAL EQUIPMENT AND SUPPORTS

Qualification of equipment

A. REFERENCE

Mechanical Equipment and Supports
SER Section 3.4.1.1, p. C.3-59

B. POTENTIAL UNRESOLVED ITEM

"However, Table 2.3.1-1 of the DCP Phase I Final Report shows that the following equipment is not qualified for the nozzle loads:

(1) Boric acid tank
(2) CCW heat exchanger
(3) CCW pump lube oil cooler
(4) Diesel generator
(5) Diesel transfer filter
(6) Waste gas compressor"

C. DCP RESPONSE

The above components are qualified for the nozzle loads except for the boric acid tank and diesel generators which are currently being reviewed to determine the acceptability of current nozzle loads.

The Project is scheduled to complete all equipment modifications and qualify all equipment for final nozzle loads and seismic spectra by October 7, 1983.

ENCLOSURE 2

Attachment 5

INTAKE STRUCTURE

Verify slab modifications in the intake structure

A. REFERENCE

Intake Structure
SER Section 3.2.6.3, p. C.3-28

B. POTENTIAL UNRESOLVED ITEM

"No significant slam pressures were noted from these tests on either the curtain wall or the floor of the pump compartment, provided that the top deck slab was modified. The slab was modified by providing a nonstructural fillet between the front curtain wall and the underside of the top slab and modifying the forebay access manhole to prevent air leakage. These modifications will be verified by the IDVP."

C. DCP RESPONSE

The modifications to the deck slab and the access manholes are complete for Units 1 and 2. A field examination of the modifications was performed by Engineering. General Construction has inspected the modifications and is preparing as-built documentation in accordance with Project procedures.

ENCLOSURE 2

Attachment 6

SYSTEM DESIGN PRESSURE/TEMPERATURE AND DIFFERENTIAL PRESSURE ACROSS POWER-OPERATED VALVES

Modifications

A. REFERENCE

System Design Pressure/Temperature and Differential Pressure Across Power-Operated Valves
SER Section 4.3.2, p. C.4-26

B. POTENTIAL UNRESOLVED ITEM

"PGandE is to complete modifications to systems. The staff will confirm that any modifications required in safety-related systems to satisfy pressure/temperature rating and power-operated valve operability under proper differential pressure conditions are implemented."

C. DCP RESPONSE

Eleven modifications to safety-related systems are required to satisfy pressure-temperature rating and power-operated valve operability under differential pressure conditions. Of these eleven modifications, five are completed. Four more will be completed by September 23, 1983. One, concerning the auxiliary feedwater pump drive turbine overspeed trip setting, cannot be completed until steam is available during startup testing. The final modification concerns replacing operator gearing for FCV-37 and -38. The delivery date for the new gear sets is not known at this time.

ENCLOSURE 2

Attachment 7

JET IMPINGEMENT EFFECTS

Jet impingement effects

A. REFERENCE

Jet Impingement Effects
SER Section 4.3.5.3, p. C.4-29

B. POTENTIAL UNRESOLVED ITEM

"The staff finds that the DCP has not as yet demonstrated, nor has the IDVP verified, that possible jet impingement loads were considered in the design and qualification of safety-related piping and equipment inside containment. This is, therefore, considered an open safety issue whose resolution will be reported in a supplement to the SER. The staff, therefore, considers the DCP and IDVP efforts reported so far, acceptable only for meeting the requirements for fuel load authorization."

C. DCP RESPONSE

The DCP Response provides a discussion of the treatment of jet impingement and other pipe break dynamic effects in the Diablo Canyon plant design. Provided will be a discussion and explanation of the FSAR commitment as well as a discussion of those aspects of the plant design which provide protection against the potential effects of jet impingement. The specific areas include layout separation, pipe whip restraint design, concrete structure design, piping system quality considerations, and seismic design.

As discussed in Section 3.6 of the FSAR, separation, restraints, and the inherent barrier effect of containment structures were utilized in accounting for the dynamic effects, especially pipe whip, of postulated pipe breaks inside containment. However, the application of this methodology since 1970 did not, in all cases, lend itself to trackable, checkable criteria and implementation documentation, nor were they required. This resulted in a finding by Roger F. Reedy (EOI 7002) and, in response, the initiation by the Project of a rigorous analysis program. This program significantly exceeded FSAR and other licensing requirements for jet impingement considerations and was intended to verify and document compliance with these FSAR commitments on the treatment of design-basis, high-energy line breaks inside containment.

C. DCP RESPONSE (continued)

The criteria of this verification program exceeded the requirements of the FSAR as a result of a Project decision to use selected current NRC/industry guidelines on pipe break as screening criteria. This decision was based upon guidelines which were readily available and familiar to the people involved, thereby minimizing the need for extensive retraining. These criteria are set forth in DCM M-65, "Jet Impingement Analysis Criteria for Inside Containment," and the resulting findings have been documented in accordance with MEP-1, "Engineering Procedure for the Analysis of Jet Impingement Effects Inside Containment." These results have shown that the plant design fulfills the commitment made in the FSAR and generally satisfies the more recent requirements.

1.0 FSAR COMMITMENT ON JET IMPINGEMENT

The commitment made in the FSAR is primarily concerned with pipe whip and jet thrust reaction forces and limits the consideration of jet impingement effects other than by layout to only "containment internal structures" as defined in FSAR Section 3.8. This is consistent with contemporary Westinghouse guidance as set forth in the 1970 version of SS1.19, which, in Section 3.7, simply states:

> "The discharge of reactor coolant from a reactor coolant pipe rupture is accompanied by jet forces and pressurization associated with expansion of the steam-water mixture. The containment, containment systems, and engineered safeguards are provided to limit the consequence of such a rupture and must not be jeopardized by structural failures induced by these consequential jet and pressure loadings. This is assured by designing the walls and roof of the reactor compartments to withstand the resultant forces, thereby preventing their collapse and damage to the above mentioned essential systems."

This commitment is also consistent with the position taken by other plants built in the same period as Diablo Canyon and is supported by a number of statements made throughout FSAR Section 3.6. Section 3.6.1, in discussing the general criteria for piping inside containment, specifically states that the "fluid discharge from ruptured piping (will) produce reaction and thrust forces in the piping systems." These are the only "consequential effects of the pipe break itself" which are stated to "have been considered in assuring that the general criteria and performance of engineered safety systems are satisfied."

C. DCP RESPONSE (continued)

Similarly, the discussion, in FSAR Section 3.6.2, of the specific criteria applied when considering breaks in the primary reactor coolant loop piping generally limits itself to the manner in which these blowdown reaction forces have been accounted for in the analysis of the RCS piping, supports, and restraints. This is the only dynamic pipe break effect mentioned in the discussion of reactor coolant pressure boundary integrity in FSAR Section 5.2.1. Pipe whip is briefly mentioned in Section 3.6.2, but only as it affects equipment support structures. This is addressed simply by stating that the protection of these structures "is accomplished by separation of equipment and piping, or by providing pipe restraints to prevent the formation of a plastic hinge mechanism. . . . Small pipes are assumed to cause no significant damage to equipment supports." The FSAR has no requirement that jet impingement as a result of a loop break be considered in the design or analysis of the supports, restraints, or attached piping.

However, that such a "jet dynamic force will result from any of the" reactor coolant system pipe breaks postulated has been noted in Section 3.6.2, but it goes on to state that "structural barriers and physical separation by plant layout have been used in the design to limit the effects of impingement. Where necessary, the jet forces resulting from the pipe break . . . on structures are calculated . . . (and) were considered in the structural design." This is consistent with the discussion of FSAR Section 3.8 as it applies to containment internal structures only. The design loads and loading combinations given for these specifically-defined structures explicitly include jet loads; such loads are, however, not included among those to be considered for the exterior shell and base slab.

For other piping inside containment, Section 3.6.3 specifically states in the opening sentence that the "containment and all essential equipment within the containment . . . have been protected against the effects of pipe whip resulting from postulated rupture of piping." This is the only resultant effect considered for such breaks, and phrases such as "large piping must be restrained so that . . .," "in the unlikely event that one of the small pressurized lines should fail . . ., the piping is restrained or arranged to meet the following requirements . . .", "restraint(s) on the lines are necessary in order to prevent impact on and subsequent damage to the neighboring equipment or piping", and "where the requirements as outlined above cannot be satisfied by judicious routing of the piping, pipe whip restraints are designed and located as outlined below . . ." appear throughout this section. There is no indication that the protection of other piping systems from jet impingement is required. The statement "blowdown forces and

C. DCP RESPONSE (continued)

jet impingement forces due to the postulated piping breaks on lines in the containment (other than the reactor coolant loops) were calculated from the formula $F_B = 1.26\ PoA$," simply provides the thrust force from those lines postulated to break.

The only other reference to jet impingement occurs in FSAR Section 8.3.1.4.10.3, which states:

> "The protection of Class 1E equipment and cables from pipe whip and jet impingement has been studied (see Section 3.6A). All Class 1E cables and equipment are protected from damage caused by these hazards."

Although Section 3.6A is only applicable outside containment, the results of the recent jet impingement analysis indicate that the intent of this statement is also met inside the containment, based on the original scope and plant operating scheme.

2.0 DESIGN BASIS AT DIABLO CANYON

The following subsections provide information on the design bases utilized at the Diablo Canyon plant.

2.1 Layout Separation

As stated in FSAR Section 3.6.2 (p.3.6-10), jet dynamic forces will result from the postulated pipe breaks. Structural barriers and physical separation by plant layout have been used in the design to limit the effects of jet impingement. For example, the crane wall, operating floor, and refueling cavity walls serve as barriers between the reactor coolant loops and the containment liner. The primary means of providing separation is to locate each of the four reactor coolant loops in four distinct quadrants projecting from the biological shield. The piping and components associated with each loop are then arranged in a compact manner which results in a physical separation between loops. Where the loops converge into the reactor vessel and separation is at a minimum, the reactor shield wall provides a barrier. Engineered safety feature system components are located outside the crane wall, with emergency core cooling system piping only penetrating the crane wall in the vicinity of the loop to which they are attached.

C. DCP RESPONSE (continued)

As part of the Diablo Canyon design/layout process, when piping drawings were revised and reissued for construction, a mechanical and an electrical engineer who were cognizant of the separation criteria and affected plant systems were required to review and provide their concurrence with the physical layout. This review and concurrence was in addition to the various engineering discipline reviews. Furthermore, small pipe and instrumentation tubing routing was included in this review because these were routed by the Home Office engineering force rather than field routed. By utilizing this review process, critical systems (pipes, conduit, instruments) are separated from high-energy systems to the extent practical.

The recent plant assessment using DCM M-65 has shown that the layout of components within the containment conforms with this separation philosophy applied during the design/layout/construction of Diablo Canyon.

2.2 Pipe Whip Restraint Design

In addition to the physical separation philosophy used in the layout of Diablo Canyon, pipe restraints were added on high energy lines in order to prevent impact on and subsequent damage to neighboring equipment or piping required to mitigate the effects of the subject pipe break. The restraint type and spacing were chosen in such a manner that unrestrained motion will not occur. Not only do these restraints limit the motion but also limit the fluid discharge zone of influence to a localized area near the break. Pipe whip restraints are located in high-energy piping systems more than 1 inch in diameter that were originally intended for other than intermittent service where the formation of a plastic hinge would endanger a structure, system, or component vital to safety.

For all high-energy lines larger than 4 inches, the break locations were postulated at all fittings. A walkdown was performed to determine restraint locations to ensure that all FSAR commitments were met. For smaller pipes, because of the lower thrust force and the limited impact zone, the restraints are located for specific reasons, e.g., valve operability.

C. DCP RESPONSE (continued)

Due to the conservatively located pipe whip restraint and the stiffness of the restraint itself, the pipe movement will be limited and the jet effects will be minimized and localized.

These pipe whip restraints, designed by PGandE, have had their gaps verified by field hot functional test (with the exception of gaps in the feedwater lines, which have yet to be verified) and have been reverified by DCP as part of the IDVP program.

To account for the effects of pipe break on the reactor coolant loop/support system, a dynamic analysis was performed. The internal blowdown forces caused by the rupture of a primary loop pipe were combined with seismic and other loading as described in FSAR Section 5.2. Although the possibility of a main coolant loop failure was extremely low, pipe whip restraints were added to the loop to assure that, even in the case of a double-ended guillotine break, the pipe could not separate any significant distance. These pipe whip restraints substantially limit the energy release rate from the break and assure that the loads resulting from the loop breaks will be minimized.

2.3 Concrete Structures

Jet impingement loads were considered in the original concrete structure design inside containment. Concrete structures that may potentially be affected by jet impingement were evaluated for these loads. These structures include the reactor compartment wall, main steam pipe chase wall, and regenerative heat exchanger compartment. Consistent with the FSAR commitment of Section 3.8, the containment wall is not explicitly evaluated for the local jet impingement load, but is evaluated using the peak uniform internal containment pressure load from reactor coolant pipe break.

Due to the limited pipe break separation, the thickness of the crane wall, and the relatively long distance to the crane wall from the pipe break, the direct jet force on the crane wall is small and no formal calculation of jet effects was judged to be required. Our current analyses support this, as they show that, even if these jet impingement forces were considered, the concrete structural integrity will not be impaired. This further validates the original Diablo Canyon design.

C. DCP RESPONSE (continued)

2.4 Piping System Quality

The evaluation of the effects of pipe break at the Diablo Canyon plant is predicated upon the occurrence of a break in a high energy line. However, much work has been performed to demonstrate that such failures are highly unlikely. This piping is of a high quality, and work on the reactor coolant loop to demonstrate the unlikelihood of failure has been done specifically for Diablo Canyon. This work is summarized in Section 5.2 of the FSAR. On a generic basis, presentations have been made to the NRC and the ACRS proposing that, for the reactor coolant system (RCS), consideration of breaks be eliminated for structural considerations. These proposals have been based on fracture mechanics studies which conclude that cracking will lead to detectable leaks before any break occurs. These proposals have been favorably received by both the NRC and ACRS. The NRC is presently in the process of revising its position on RCS pipe break as delineated in Standard Review Plan Sections 3.6.1 and 3.6.2 and Regulatory Guide 1.46.

Application of the revised NRC position may also be extended to the other high-energy lines inside containment. This piping has been fabricated from high-strain capability materials which are similar in character to the reactor coolant loop material. These piping systems were then inspected, hydro-tested, and accepted for service using rigorous and detailed procedures. The seismic design of these piping systems has been thorough and analysis has demonstrated that failure of the piping will not occur in the case of an earthquake.

Thus, the quality and material properties of the piping, the extent of inspection, and the inherent margin introduced by design and analysis lead to the conclusion that postulated ruptures have a very low probability of occurrence.

C. DCP RESPONSE (continued)

2.5 Seismic Design of Piping and Systems

The ability of a piping system to withstand off-normal loads is dependent upon its design. Diablo Canyon piping systems are designed for seismic loads from the DE, DDE, and Hosgri event and have been repeatedly analyzed for these loadings. These design requirements have increased the inherent capability of the piping systems to withstand other off-normal events to several times greater than other "non-West Coast" plants. Thus, while jet impingement loads are not explicitly included in the piping system design, the seismic design of piping systems to the levels determined to be appropriate for the plant site provides inherent conservatism and has increased the piping capability to withstand jet effects from postulated pipe breaks.

3.0 SUMMARY

The Project has conducted an exhaustive analysis of the effects of jet impingement inside containment utilizing screening criteria based upon current NRC/industry guidelines. However, these criteria significantly exceed the FSAR commitment on pipe break dynamic effects, which generally limits itself to consideration of blowdown reactive forces and pipe whip. Jet impingement is only considered as it affects containment internal structures as defined in FSAR Section 3.8. Nonetheless, the recent verification analysis has shown that the design not only complies with the FSAR commitment, but also generally satisfies current criteria. In those instances where it does not, other aspects of the plant design have increased its inherent capability to withstand or serve to limit the effects of other off-normal events not explicitly included in the analysis. However, a design-basis pipe break has been shown to be an extremely low-probability event. The NRC is currently revising its position to eliminate consideration of breaks for RCS piping based on the low probability of the event and the undesirability of additional structures and barriers that adversely affect maintenance and inspection. The application of this revised position is expected to be extended to other high-energy piping systems inside containment. Thus, the older Diablo Canyon criteria is consistent with current trends in the industry in the area of jet impingement effects.

C. DCP RESPONSE (continued)

(2) The annulus steel is a structure specifically designed to support piping. The stiffness requirements for pipe support structures for the DDE analysis as well as the Hosgri analysis is clearly defined in the FSAR and Hosgri Reports as 20 Hz.

This agreed upon criteria, i.e., being considered rigid by having a fundamental frequency greater than 20 Hz, is entirely reasonable and appropriate for the safety evaluation of the supported systems and components for the following reasons:

- Dominant modes of piping and raceways generally have frequencies in the 5 to 15 Hz range. These modes are dominant for either or both of the following reasons. First, the highest amplification in the horizontal floor response spectra occurs in this range. Second, the participation factor of the modes in the 5 to 15 Hz range are normally higher than those of the higher modes. In the cases where modes with frequencies greater than 15 Hz have larger participation factors than those of lower modes, the system is quite stiff which results in considerable inherent structural capacity.

- The strain associated with modes having frequencies higher than 20 Hz is quite small. For example, the natural frequency of a single mass oscillator is $f = 3.13/\sqrt{D}$, where D is the static deflection in inches of the mass subjected to a 1.0 g loading and f is in cycles per second. The deflection of a 20 Hz oscillator to a 1.0 g load is 0.0245 inches, which for the span and size of piping and raceways considered results is a small strain. A conservative estimate of the acceleration from a coupled analysis of the annulus steel and the piping or raceway for modes having a frequency greater than 20 Hz is 3.0 g. The deflection associated with a 20 Hz mode experiencing 3.0 g would be approximately 0.064 inches. Such a deflection could not cause serious problems for raceways or piping and these are the items supported by the annulus steel.

- For conduits or piping where the modes having frequencies greater than 20 Hz are combined with lower modes, the effects are combined by the SRSS. This tends to reduce the significance of a nondominant mode. If, for example, there is one dominant mode below 20 Hz which produces a stress of 20 ksi and a mode above 20 Hz which produces a stress of 5 ksi, the combined stress is 20.6 ksi. Further, if there are four modes below 20 Hz and all are producing 5 ksi individually, the combined stress, excluding the higher mode, would be 10 ksi. The combined stress, including the higher mode, would be 11.2 ksi. This indicates the increase in stress due to inclusion of the higher modes causes only a small increase in the combined seismic stress.

C. DCP RESPONSE (continued)

- Piping supports for Diablo Canyon have a stiffness of 20 Hz which results in a certain amount of toughness above that of supports designed on the basis of strength only. A number of plants designed in the late 60's and early 70's did not have any specific stiffness requirement for pipe supports. Thus, the design of Diablo Canyon's pipe supports is already more conservative than typical industry practice for this vintage plant.

- The piping and raceway analysis is based on an uncoupled linear elastic analysis. Tests have demonstrated behavior to be nonlinear and designs based on linear analysis with traditional low damping values to be quite conservative. For piping, if the actual behavior of the supports are taken into consideration, it is apparent that the linear elastic analysis is a conservative idealization of the actual behavior. The actual gaps that exist at some supports are neglected. This results in more of the actual building motion being transmitted to the pipe than actually takes place. In reality, the pipe will tend to have relative movement between the pipe and supports where the gaps exist, which tends to reduce the input motion into the piping system and also tends to prevent a resonant condition from developing. In addition, some supports allow sliding to take place between the support and the pipe. The frictional behavior is also neglected, which, if included, would tend to reduce resonant conditions. The uncoupled analysis using response spectra as input has been recognized as a conservative approach when the weight of the supported items is above a few percent of the supporting structure. In the case of the piping and raceway systems, the percentage is high, relative to the annulus steel. Therefore some unquantified margin exists.

When the Hosgri criteria were developed from many and lengthy discussions between the NRC Staff, PGandE and its respective consultants, the above considerations, and perhaps others not explicitly mentioned, influenced the collective engineering judgment. Engineering judgment is, in fact, necessary in such a process due to the nature of seismic design. Based on all of the considerations outlined above, it is concluded that the 20 Hz criteria for definitions of rigid range for the horizontal response of the annulus structure is a reasonable and appropriate basis for evaluation of the piping, systems, and components supported by the annulus steel.

ENCLOSURE 2

Attachment 2

LARGE BORE PIPING AND SUPPORTS

Buckling criteria (IDVP action)

A. REFERENCE

Large Bore Piping and Supports
SER Section 3.3.1.4, p. C.3-48

B. POTENTIAL UNRESOLVED ITEM

"The IDVP should evaluate and justify the buckling criteria specified for linear supports, specifically the rise of the Euler buckling equation for calculating the critical buckling load for all slenderness ratios."

C. DCP RESPONSE

The Project offers the following clarification of buckling criteria used for linear type supports.

Supplementary steel used in Diablo Canyon pipe supports has been designed to satisfy the requirements of the AISC Manual of Steel Construction, 7th Edition for the normal and DE load cases. For the DDE and Hosgri load cases, a 1/3 increase is permitted over normal allowables.

For columns with a slenderness ratio (Kl/r) less than C_c (column slenderness ratio separating elastic and inelastic buckling $\sqrt{2\pi^2 E/F_y}$), the AISC assumes failure by inelastic buckling and limits the allowable stress to a value less than the value that would be permitted by factoring (2/3) the Euler formula.

By using AISC as a basis for design and review of pipe support supplementary steel, the Project has accounted for effects that may cause failure of columns at stress levels below the value predicted by the Euler formula. This approach is consistent with industry practice.

ENCLOSURE 2

Attachment 3

INSTRUMENTATION AND CONTROLS DESIGN

EOI 8047 - acceptability of single relay to isolate steam generator blowdown

A. REFERENCE

Auxiliary Feedwater System
SER Section 4.2.3.1, p. C.4-12

B. POTENTIAL UNRESOLVED ITEM

"The staff...finds that the use of a single relay to isolate steam generator blowdown on automatic initiation of the AFWS is in conflict with the design shown in FSAR Figure 7.2-1, Sheet 15. Further, the redundancy, as shown by this figure, typical for all Westinghouse plants, is consistent with the Westinghouse analysis noted above which assumes that steam generator blowdown is terminated for those events not associated with safety injection. The staff concludes that the concern identified does represent a deviation from the Westinghouse interface requirements to be implemented by the balance-of-plant design."

"The staff will pursue this concern with PGandE to obtain a resolution of this matter."

C. DCP RESPONSE

The Staff indicates a concern about "... a deviation from the Westinghouse interface requirements to be implemented by the balance of plant design" with respect to the use of a single relay to isolate steam generator blowdown on automatic initiation of the Auxiliary Feedwater System (AFWS). The specific issue is identified in the FSAR. Figure 7.3-47 (Attachment 1) indicates that a single relay (3AFWP) initiates steam generator blowdown isolation, while FSAR Figure 7.2-1 (Attachment 2) indicates that redundant relays initiate isolation.

The design criteria in the Westinghouse "Steam System Design Manual", Rev. 0, Subsection V-8 (Attachment 3), simply requires that, upon initiation of the AFWS, the blowdown valves will automatically close; redundant relays are not specified. The PGandE design fully conforms to the design criteria, using a single relay (3AFWP) to meet the requirement of automatic closure of the blowdown valves. Additionally, the PGandE design has been reviewed on various occasions by Westinghouse to ensure that the PGandE design conforms to the criteria. Attachments 4, 5, 6, 7 and 8 illustrate this review process. Attachments 7 and 8 specifically document that Westinghouse reviewed the PGandE design and concurred that the design with a single relay meets their steam generator blowdown isolation criteria.

C. DCP RESPONSE (continued)

This response provides documentation which demonstrates that the concern identified by the NRC staff clearly does not represent a deviation from the Westinghouse interface requirements to be implemented by the balance-of-plant design.

However, to close this issue in a timely manner, PGandE will install a redundant relay for steam generator blowdown isolation on auxiliary feedwater pump start as shown in FSAR Figure 7.2-1. FSAR Figure 7.3-47 will be updated to reflect the redundant relay.

SUBSECTION 8 - STEAM GENERATOR BLOWDOWN AND SAMPLE SYSTEM

PURPOSE

The steam generator blowdown and sample system is used in conjunction with the chemical feed system to control the chemical composition of the steam generator shell water within the specified limits (Section 4.1 of "General Design Criteria for Power Plant and Steam Systems Associated with Nuclear Steam Supply Systems"). The blowdown discharge is normally flashed in an atmosphere vented tank and the remaining liquid drained into the circulating water discharge. This constitutes a potential release path to the environment even though three barriers exist between the fission products and the blowdown, and so a means of monitoring and controlling the blowdown is an integral feature of the system design.

FUNCTIONAL REQUIREMENTS

To fulfill the two-fold monitor and control purpose, the system includes continuous radiological monitoring and chemical analyzing, manual sampling, and protective isolation valving. The usual analyzing devices consist of conductivity cells and manual sample points for each steam generator. These are associated with the control of the individual steam generator water chemistry. The monitoring function is provided by a radiation monitor which senses flow from all steam generators. If radioactivity is sensed, all discharge from this system is contained by closing the various valves and a control room alarm is sounded since this is an indication that radioactive material is present in the steam generator secondary side.

SAFETY REQUIREMENTS

The safety aspect mainly centers around the monitoring for radioactivity in the blowdown liquid. The monitor is to be in operation, with all steam generators being sampled, before any blowdown is performed.

The part of the system from the steam generators to the isolation valves, outside of the containment, comprises an extension of the steam generator boundary. This portion of the system therefore has a safety classification since it is necessary to the safe shutdown of the plant. The balance of the system, downstream of the isolation valves, does not have this higher classification since blowdown can be discontinued for an emergency cooldown. The blowdown and sample lines within the containment require reactor coolant system missile protection similar to the feed and steam lines to avoid any intereffect between a loss of coolant accident and a steam or feedwater break.

SYSTEM DESIGN DESCRIPTION

Figure V-34 shows a system design with one steam generator, although it is typical for whatever number exists. Additional steam generators would be in parallel, all feeding samples through a common radiation monitor. Individual coolers, manual samples, and conductivity reading would be used.

The isolation valve requirements on the lines penetrating the containment depend upon individual plant requirements; however, our interpretation of the usual containment isolation is shown in Figure V-34, where the blowdown and sample lines have a manual and an automatic isolation valve immediately outside the containment.

These automatic valves are of a fail close design, are normally open, and blowdown is manually regulated with the valve located near the flash tank, although through control room manual action the automatic valve can be used to provide an on-off blowdown operation mode with the regulation valve set for a given rate. The tank is vented to the atmosphere and the liquid drained to the discharge canal. A normally closed alternate route to the waste disposal system is also shown. If fission product release into the steam generators's secondary side were to occur, this connection provides the abiltiy to drain the steam generator contents after shutdown to enable corrective maintenance to be done. The blowdown tank and lines do not require special protective radiological shielding.

The sample lines are shown taken off the blowdown lines as close to the steam generator as practical and brought out through separate containment penetrations. This is considered necessary in order to provide representative chemical samples and satisfactory radioactivity control. For the same reasons, the sample tubing size is expected to be small in order to reduce lag time. Containment isolation valves are located in the lines immediately outside the containment. The sample is cooled and then has three parallel paths; one is available for manual sampling in the sample hood and sink inside the nuclear sample room, the second to a conductivity cell outside the sample room, and the third joins the other steam generator samples and goes through a radiation monitor. The temperature and pressure limits for the radiation monitor are 140°F and 150 pounds per square inch guage, respectively, and the fluid condition must be maintained below these levels. The constant flow from the conductivity cells and the radiation monitor is piped back to the blowdown tank.

A demineralized water line is shown for the purpose of flushing the radiation monitor. This will be useful in verifing monitor signals and for sensor calibration.

It should be noted that there are four valves per steam generator, two within the containment and the two immediately outside. If the latter require repair because of leaks, a plant cooldown and draining of the steam generator is required. We recommend that high quality seal welded bonnet valves be specified for these locations, rather than routine field-procurred valves, in order to minimize the possibility of this occurrence. These valves are marked with an asterisk in Figure V-34.

CONTROL

Blowdown rate is under the operator's control using the valves near the blowdown tank, although the isolation valves can be utilized from the control room for on-off blowdown control. The isolation valves on the blowdown tank discharge are controlled by various automatic signals as well, as shown in Figure V-35.

The blowdown isolation valves are closed automatically by one one of these signals: a signal from the radiation monitor, a containment isolation signal, and an initiating start signal of the auxiliary feedwater system.

The sample isolation valve is automatically closed upon the radiation monitor signal or by containment isolation. It has an additional feature, however, the ability to obtain a manual sample following a radiation monitor alarm. This ability is desirable since that means the responsible steam generator can be definitely identified. A manual switch shown is for this purpose. It would be located within the sample room and would override only the radiation signal and would not interfere with containment isolation.

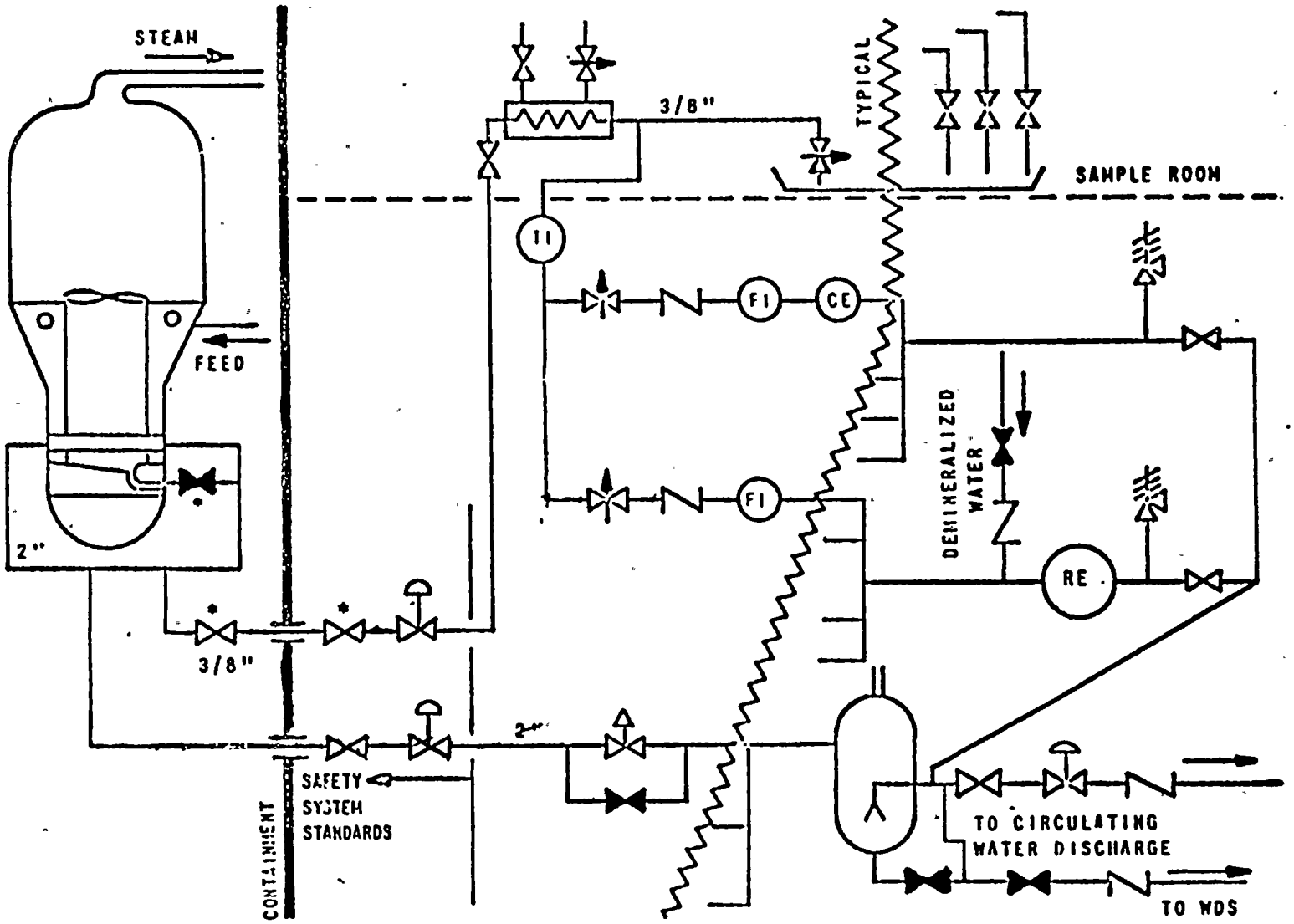

Figure V-34. Typical Blowdown and Sample System Design

1703-19

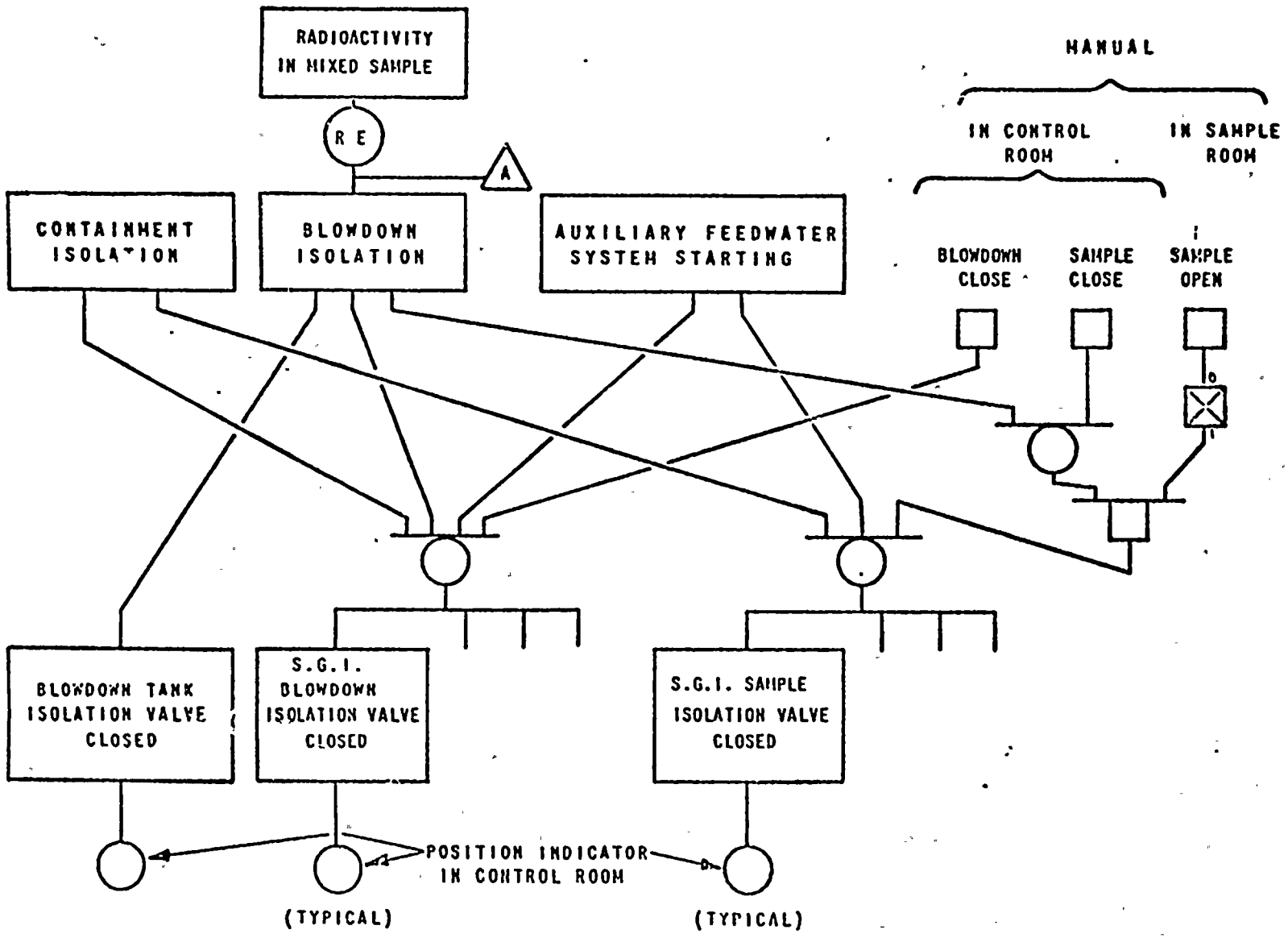

Figure V-35. Blowdown and Sample System Logic Diagram

ATTACHMENT 4

Westinghouse Electric Corporation Power Systems

PWR Systems Division
Box 355
Pittsburgh Pennsylvania 15230

2/27/73

PGE-2235
SSE-PGE-5075
S.O. PGE-500

Mr. D. V. Kelly
Chief Mechanical Engineer
PACIFIC GAS AND ELECTRIC COMPANY
77 Beale Street
San Francisco, CA 94106

Dear Mr. Kelly:

PACIFIC GAS AND ELECTRIC COMPANY
NUCLEAR PLANT, DIABLO CANYON SITE
UNITS NUMBER 1 AND 2
Criteria Evaluation

Attached is the Steam Systems Criteria Compliance document which is being submitted for your use and our information.

Basically, the tabulation states the latest criteria relating to the secondary plant design for the Westinghouse Nuclear Steam Supply System. The document also references applicable design manuals which you have in your possession. The references explain the criteria in greater detail.

We request that you check your plant design with the criteria listed for our information. If your design meets the criteria, would you please initial your verification. Our objective is to obtain a document for our information in which the column entitled "Verification of Compliance" is completed and we will be able to help you in this endeavor. For the equipment Westinghouse is supplying, we will sign the verification column.

The object of the exercise, as far as your plant is concerned, is to use this data to discover any areas which could be potentially troublesome and offer you our help in trying to resolve these difficulties.

Since this is the first issue we would appreciate any comments for improvement. For convenience, you may wish to insert this into your Steam Systems Design Manual. If we can be of any help in clarification of criteria, we are available for further discussion. When the document is completed please forward a copy for our use and files.

Very truly yours,

C. Y. Liang

C. Y. Liang
Steam Systems Engineering

APPROVED: A. J. Bjuggen

J. W. Dorrycott, Manager
Pacific Gas and Electric
Project

DTP/dj
Attachment

cc: D. V. Kelly - 6L, 5A
J. A. Hughes - 1L
R. L. Mellers - 1L

STEAM SYSTEMS CRITERIA COMPLIANCE

ITEM NUMBER	CRITERIA	DESIGN MANUAL REFERENCE	VERIFICATION OF COMPLIANCE
B.2.f	When any auxiliary feed pump starts, the blowdown and sample valves automatically close	SSDM - Section V-8 Page 3 of 5	
B.2.g	Local control is provided for all valves in the auxiliary feedwater system which are operable from the control room (with the exception of the recirculation valves)	SSDM - Section V-7 Page 7 of 13	
B.2.h	All valves and pumps in the auxiliary feedwater system which can be operated from the control room provide for local control to override remote control. When remote control is overridden, an annunciator alarms in the control room	SSDM - Section V-7 Page 7 of 13	
B.2.i	Sufficient instrumentation and controls (both local and remote) allow adequate monitoring of the auxiliary feedwater system state	SSDM - Section V-7 Page 7 of 13	

ATTACHMENT 5

October 17, 1973

W Steam System Design
Criteria Verification
File No. 140.000
PG&E P.O. 22-A-8700-8, Spec. 8700
Supplier Job No. 69000
Unit 1 - Diablo Canyon Site
Project Letter No. 1630

Mr. Joseph Dorrycott
Westinghouse Nuclear Energy Systems
PWR Systems Division
P.O.Box 355
Pittsburgh, Pennsylvania 15230

Dear Mr. Dorrycott:

Please find attached a copy of your SKE-SP-15 - "Steam Systems Criteria Compliance" sent to us with your letter PGE-2235. We find we meet most all of the Steam System Criteria but not all. Please review our replies and comment on the acceptability of our systems.

Very truly yours,

B. V. KELLY
Chief Mechanical & Nuclear Engineer

By: R.M. Laverty

TJDaly/sam
Attachment
cc: File 18.25
KLMellars/W, SF

0012001/3

ATTACHMENT 6

Westinghouse Electric Corporation Power Systems

PWR Systems Division
Box 355
Pittsburgh Pennsylvania 15230

3/27/74
PGE-2622
PED-II-PGE-337
S.O. PGE-500
Ref: PGE Project Letter No. 1630

DIABLO CANYON
Unit #1 & #2
☐ Original
File: 143.000

☑ Copy For:
☐ Reg. File
☑ File 1.13
☐ JEC ☐ IPR
☐ PVB ☐ —
☐ MHC ☐ —

Mr. D. V. Kelly
Chief Mechanical Engineer
PACIFIC GAS AND ELECTRIC COMPANY
77 Beale Street
San Francisco, CA 94106

Dear Mr. Kelly:

PACIFIC GAS AND ELECTRIC COMPANY
NUCLEAR PLANT, DIABLO CANYON SITE
UNITS NUMBER 1 AND 2
Steam Systems Criteria Compliance

We have reviewed the subject document attached to the reference letter with following comments:

1. Items A.1.d, A.2.k and C.1.f are not responded in the document. Please send further information for these open items when they are available.

2. Item F.1.b requires a verification to the plant compressed air system electric power supply to ensure that it can be manually loaded on the emergency power supply (Diesels) during station blackout.

3. Item B.1.b indicates that the system design does not meet W criteria; please refer to W SSDM Section V-7, Page 3 of 13 for further consideration of the system design.

Very truly yours,

C. Y. Liang

C. Y. Liang, Engineer
Fluid Systems Design II

CYL/djs

cc: D. V. Kelly 6L
J. A. Hughes 1L
R. L. Mellers 1L

APPROVED: P. Blair for

J. W. Dorrycott, Manager
Pacific Gas and Electric Project

0 0 0 3 4 - 2 4 9 7

ATTACHMENT 7

PGE-5389

Westinghouse Electric Corporation

Water Reactor Divisions

Nuclear Operations Division

Box 355
Pittsburgh Pennsylvania 15230

August 3, 1983

J. V. Rocca
Chief Mechanical Engineer
Pacific Gas & Electric Company
c/o Bechtel Power Corporation
Diablo Canyon Project
45 Fremont Street, 10th Floor, Room D28
San Francisco, CA 94602

Ref: 1) W ltr. PGE-2235
2) PGE ltr. 1630
3) W ltr. PGE-2622

Attention: J. J. McCracken

PACIFIC GAS AND ELECTRIC COMPANY
NUCLEAR PLANT, DIABLO CANYON UNIT 1 and 2
Steam Generator Blowdown Isolation Design Criteria

Dear Mr. Rocca:

As requested by a telephone discussion, this letter is to summarize the documentation of the Westinghouse design criteria and PG&E implementation for Diablo Canyon steam generator blowdown isolation.

The design criteria for steam generator blowdown isolation is specified in the Westinghouse "Steam Systems Design Manual". The scope of design for this area is the responsibility of the customer/AE. Westinghouse, in our Functional Diagrams, identifies a preferred (by Westinghouse) method of implementing this criteria.

In order to verify implementation of this Westinghouse criteria and other steam systems criteria, Westinghouse in reference 1) forwarded "Steam Systems Criteria Compliance", SSE-SF-15 to PG&E. The verification sections of SSE-SF-15 were completed by PG&E. In particular, PG&E verified compliance with the Westinghouse steam generator blowdown isolation criteria in item B.2.f. The completed SSE-SF-15 was forwarded to Westinghouse in reference 2). Westinghouse documented its review of the completed SSE-SF-15 in reference 3). In particular, Westinghouse had three comments (later resolved) in reference 3), none of which related to steam generator blowdown isolation. Therefore, Westinghouse concurred that the PG&E implementation met the Westinghouse steam generator blowdown isolation criteria.

ATTACHMENT 8

PGE-5492

Westinghouse Electric Corporation
Water Reactor Divisions

Nuclear Operations Division
Box 355
Pittsburgh Pennsylvania 15230

September 6, 1983

Ref: PGE-5389

J. V. Rocca
Chief Mechanical Engineer
Pacific Gas & Electric Company
c/o Bechtel Power Corporation
Diablo Canyon Project
45 Fremont Street, 10th Floor, Room D28
San Francisco, CA 94602

Attention: J. J. McCracken

PACIFIC GAS AND ELECTRIC COMPANY
NUCLEAR PLANT, DIABLO CANYON UNITS 1 and 2
Steam Generator Blowdown Isolation

Dear Mr. Rocca:

The referenced letter described the documentation of the Westinghouse design criteria and the related Pacific Gas & Electric (PG&E) implementation for Diablo Canyon steam generator blowdown isolation. To provide further clarification, the Westinghouse criterion for steam generator blowdown isolation is "The blowdown isolation valves are closed automatically by one of these signals: a signal from the radiation monitor, a containment isolation signal and an initiating start signal of the auxiliary feedwater system" (Steam Systems Design Manual, WCAP 7451, February, 1970). The Westinghouse criterion does not require redundancy. The PG&E design for Diablo Canyon steam generator blowdown isolation, as shown in Figure 7.3-47 of the Diablo Canyon FSAR meets this criterion.

Very truly yours,

WESTINGHOUSE ELECTRIC CORPORATION

John C. Hoebel

John C. Hoebel, Manager
Pacific Gas and Electric Project

JH/rcc/2979D

cc: J. V. Rocca IL
J. E. Murphy (W San Francisco Office) IL
J. B. Hoch IL
B. S. Lew IL

ENCLOSURE 2

Attachment 4

MECHANICAL EQUIPMENT AND SUPPORTS

Qualification of equipment

A. REFERENCE

Mechanical Equipment and Supports
SER Section 3.4.1.1, p. C.3-59

B. POTENTIAL UNRESOLVED ITEM

"However, Table 2.3.1-1 of the DCP Phase I Final Report shows that the following equipment is not qualified for the nozzle loads:

(1) Boric acid tank
(2) CCW heat exchanger
(3) CCW pump lube oil cooler
(4) Diesel generator
(5) Diesel transfer filter
(6) Waste gas compressor"

C. DCP RESPONSE

The above components are qualified for the nozzle loads except for the boric acid tank and diesel generators which are currently being reviewed to determine the acceptability of current nozzle loads.

The Project is scheduled to complete all equipment modifications and qualify all equipment for final nozzle loads and seismic spectra by October 7, 1983.

ENCLOSURE 2

Attachment 5

INTAKE STRUCTURE

Verify slab modifications in the intake structure

A. REFERENCE

Intake Structure
SER Section 3.2.6.3, p. C.3-28

B. POTENTIAL UNRESOLVED ITEM

"No significant slam pressures were noted from these tests on either the curtain wall or the floor of the pump compartment, provided that the top deck slab was modified. The slab was modified by providing a nonstructural fillet between the front curtain wall and the underside of the top slab and modifying the forebay access manhole to prevent air leakage. These modifications will be verified by the IDVP."

C. DCP RESPONSE

The modifications to the deck slab and the access manholes are complete for Units 1 and 2. A field examination of the modifications was performed by Engineering. General Construction has inspected the modifications and is preparing as-built documentation in accordance with Project procedures.

ENCLOSURE 2

Attachment 6

SYSTEM DESIGN PRESSURE/TEMPERATURE AND DIFFERENTIAL PRESSURE ACROSS POWER-OPERATED VALVES

Modifications

A. REFERENCE

System Design Pressure/Temperature and Differential Pressure Across Power-Operated Valves
SER Section 4.3.2, p. C.4-26

B. POTENTIAL UNRESOLVED ITEM

"PGandE is to complete modifications to systems. The staff will confirm that any modifications required in safety-related systems to satisfy pressure/temperature rating and power-operated valve operability under proper differential pressure conditions are implemented."

C. DCP RESPONSE

Eleven modifications to safety-related systems are required to satisfy pressure-temperature rating and power-operated valve operability under differential pressure conditions. Of these eleven modifications, five are completed. Four more will be completed by September 23, 1983. One, concerning the auxiliary feedwater pump drive turbine overspeed trip setting, cannot be completed until steam is available during startup testing. The final modification concerns replacing operator gearing for FCV-37 and -38. The delivery date for the new gear sets is not known at this time.

ENCLOSURE 2

Attachment 7

JET IMPINGEMENT EFFECTS

Jet impingement effects

A. REFERENCE

Jet Impingement Effects
SER Section 4.3.5.3, p. C.4-29

B. POTENTIAL UNRESOLVED ITEM

"The staff finds that the DCP has not as yet demonstrated, nor has the IDVP verified, that possible jet impingement loads were considered in the design and qualification of safety-related piping and equipment inside containment. This is, therefore, considered an open safety issue whose resolution will be reported in a supplement to the SER. The staff, therefore, considers the DCP and IDVP efforts reported so far, acceptable only for meeting the requirements for fuel load authorization."

C. DCP RESPONSE

The DCP Response provides a discussion of the treatment of jet impingement and other pipe break dynamic effects in the Diablo Canyon plant design. Provided will be a discussion and explanation of the FSAR commitment as well as a discussion of those aspects of the plant design which provide protection against the potential effects of jet impingement. The specific areas include layout separation, pipe whip restraint design, concrete structure design, piping system quality considerations, and seismic design.

As discussed in Section 3.6 of the FSAR, separation, restraints, and the inherent barrier effect of containment structures were utilized in accounting for the dynamic effects, especially pipe whip, of postulated pipe breaks inside containment. However, the application of this methodology since 1970 did not, in all cases, lend itself to trackable, checkable criteria and implementation documentation, nor were they required. This resulted in a finding by Roger F. Reedy (EOI 7002) and, in response, the initiation by the Project of a rigorous analysis program. This program significantly exceeded FSAR and other licensing requirements for jet impingement considerations and was intended to verify and document compliance with these FSAR commitments on the treatment of design-basis, high-energy line breaks inside containment.

C. DCP RESPONSE (continued)

The criteria of this verification program exceeded the requirements of the FSAR as a result of a Project decision to use selected current NRC/industry guidelines on pipe break as screening criteria. This decision was based upon guidelines which were readily available and familiar to the people involved, thereby minimizing the need for extensive retraining. These criteria are set forth in DCM M-65, "Jet Impingement Analysis Criteria for Inside Containment," and the resulting findings have been documented in accordance with MEP-1, "Engineering Procedure for the Analysis of Jet Impingement Effects Inside Containment." These results have shown that the plant design fulfills the commitment made in the FSAR and generally satisfies the more recent requirements.

1.0 FSAR COMMITMENT ON JET IMPINGEMENT.

The commitment made in the FSAR is primarily concerned with pipe whip and jet thrust reaction forces and limits the consideration of jet impingement effects other than by layout to only "containment internal structures" as defined in FSAR Section 3.8. This is consistent with contemporary Westinghouse guidance as set forth in the 1970 version of SS1.19, which, in Section 3.7, simply states:

> "The discharge of reactor coolant from a reactor coolant pipe rupture is accompanied by jet forces and pressurization associated with expansion of the steam-water mixture. The containment, containment systems, and engineered safeguards are provided to limit the consequence of such a rupture and must not be jeopardized by structural failures induced by these consequential jet and pressure loadings. This is assured by designing the walls and roof of the reactor compartments to withstand the resultant forces, thereby preventing their collapse and damage to the above mentioned essential systems."

This commitment is also consistent with the position taken by other plants built in the same period as Diablo Canyon and is supported by a number of statements made throughout FSAR Section 3.6. Section 3.6.1, in discussing the general criteria for piping inside containment, specifically states that the "fluid discharge from ruptured piping (will) produce reaction and thrust forces in the piping systems." These are the only "consequential effects of the pipe break itself" which are stated to "have been considered in assuring that the general criteria and performance of engineered safety systems are satisfied."

C. DCP RESPONSE (continued)

Similarly, the discussion, in FSAR Section 3.6.2, of the specific criteria applied when considering breaks in the primary reactor coolant loop piping generally limits itself to the manner in which these blowdown reaction forces have been accounted for in the analysis of the RCS piping, supports, and restraints. This is the only dynamic pipe break effect mentioned in the discussion of reactor coolant pressure boundary integrity in FSAR Section 5.2.1. Pipe whip is briefly mentioned in Section 3.6.2, but only as it affects equipment support structures. This is addressed simply by stating that the protection of these structures "is accomplished by separation of equipment and piping, or by providing pipe restraints to prevent the formation of a plastic hinge mechanism. . . . Small pipes are assumed to cause no significant damage to equipment supports." The FSAR has no requirement that jet impingement as a result of a loop break be considered in the design or analysis of the supports, restraints, or attached piping.

However, that such a "jet dynamic force will result from any of the" reactor coolant system pipe breaks postulated has been noted in Section 3.6.2, but it goes on to state that "structural barriers and physical separation by plant layout have been used in the design to limit the effects of impingement. Where necessary, the jet forces resulting from the pipe break . . . on structures are calculated . . . (and) were considered in the structural design." This is consistent with the discussion of FSAR Section 3.8 as it applies to containment internal structures only. The design loads and loading combinations given for these specifically-defined structures explicitly include jet loads; such loads are, however, not included among those to be considered for the exterior shell and base slab.

For other piping inside containment, Section 3.6.3 specifically states in the opening sentence that the "containment and all essential equipment within the containment . . . have been protected against the effects of pipe whip resulting from postulated rupture of piping." This is the only resultant effect considered for such breaks, and phrases such as "large piping must be restrained so that . . .," "in the unlikely event that one of the small pressurized lines should fail . . ., the piping is restrained or arranged to meet the following requirements . . .", "restraint(s) on the lines are necessary in order to prevent impact on and subsequent damage to the neighboring equipment or piping", and "where the requirements as outlined above cannot be satisfied by judicious routing of the piping, pipe whip restraints are designed and located as outlined below . . ." appear throughout this section. There is no indication that the protection of other piping systems from jet impingement is required. The statement "blowdown forces and

C. DCP RESPONSE (continued)

jet impingement forces due to the postulated piping breaks on lines in the containment (other than the reactor coolant loops) were calculated from the formula $F_B = 1.26\ PoA$," simply provides the thrust force from those lines postulated to break.

The only other reference to jet impingement occurs in FSAR Section 8.3.1.4.10.3, which states:

> "The protection of Class 1E equipment and cables from pipe whip and jet impingement has been studied (see Section 3.6A). All Class 1E cables and equipment are protected from damage caused by these hazards."

Although Section 3.6A is only applicable outside containment, the results of the recent jet impingement analysis indicate that the intent of this statement is also met inside the containment, based on the original scope and plant operating scheme.

2.0 DESIGN BASIS AT DIABLO CANYON

The following subsections provide information on the design bases utilized at the Diablo Canyon plant.

2.1 Layout Separation

As stated in FSAR Section 3.6.2 (p.3.6-10), jet dynamic forces will result from the postulated pipe breaks. Structural barriers and physical separation by plant layout have been used in the design to limit the effects of jet impingement. For example, the crane wall, operating floor, and refueling cavity walls serve as barriers between the reactor coolant loops and the containment liner. The primary means of providing separation is to locate each of the four reactor coolant loops in four distinct quadrants projecting from the biological shield. The piping and components associated with each loop are then arranged in a compact manner which results in a physical separation between loops. Where the loops converge into the reactor vessel and separation is at a minimum, the reactor shield wall provides a barrier. Engineered safety feature system components are located outside the crane wall, with emergency core cooling system piping only penetrating the crane wall in the vicinity of the loop to which they are attached.

C. DCP RESPONSE (continued)

As part of the Diablo Canyon design/layout process, when piping drawings were revised and reissued for construction, a mechanical and an electrical engineer who were cognizant of the separation criteria and affected plant systems were required to review and provide their concurrence with the physical layout. This review and concurrence was in addition to the various engineering discipline reviews. Furthermore, small pipe and instrumentation tubing routing was included in this review because these were routed by the Home Office engineering force rather than field routed. By utilizing this review process, critical systems (pipes, conduit, instruments) are separated from high-energy systems to the extent practical.

The recent plant assessment using DCM M-65 has shown that the layout of components within the containment conforms with this separation philosophy applied during the design/layout/construction of Diablo Canyon.

2.2 Pipe Whip Restraint Design

In addition to the physical separation philosophy used in the layout of Diablo Canyon, pipe restraints were added on high energy lines in order to prevent impact on and subsequent damage to neighboring equipment or piping required to mitigate the effects of the subject pipe break. The restraint type and spacing were chosen in such a manner that unrestrained motion will not occur. Not only do these restraints limit the motion but also limit the fluid discharge zone of influence to a localized area near the break. Pipe whip restraints are located in high-energy piping systems more than 1 inch in diameter that were originally intended for other than intermittent service where the formation of a plastic hinge would endanger a structure, system, or component vital to safety.

For all high-energy lines larger than 4 inches, the break locations were postulated at all fittings. A walkdown was performed to determine restraint locations to ensure that all FSAR commitments were met. For smaller pipes, because of the lower thrust force and the limited impact zone, the restraints are located for specific reasons, e.g., valve operability.

C. DCP RESPONSE (continued)

Due to the conservatively located pipe whip restraint and the stiffness of the restraint itself, the pipe movement will be limited and the jet effects will be minimized and localized.

These pipe whip restraints, designed by PGandE, have had their gaps verified by field hot functional test (with the exception of gaps in the feedwater lines, which have yet to be verified) and have been reverified by DCP as part of the IDVP program.

To account for the effects of pipe break on the reactor coolant loop/support system, a dynamic analysis was performed. The internal blowdown forces caused by the rupture of a primary loop pipe were combined with seismic and other loading as described in FSAR Section 5.2. Although the possibility of a main coolant loop failure was extremely low, pipe whip restraints were added to the loop to assure that, even in the case of a double-ended guillotine break, the pipe could not separate any significant distance. These pipe whip restraints substantially limit the energy release rate from the break and assure that the loads resulting from the loop breaks will be minimized.

2.3 Concrete Structures

Jet impingement loads were considered in the original concrete structure design inside containment. Concrete structures that may potentially be affected by jet impingement were evaluated for these loads. These structures include the reactor compartment wall, main steam pipe chase wall, and regenerative heat exchanger compartment. Consistent with the FSAR commitment of Section 3.8, the containment wall is not explicitly evaluated for the local jet impingement load, but is evaluated using the peak uniform internal containment pressure load from reactor coolant pipe break.

Due to the limited pipe break separation, the thickness of the crane wall, and the relatively long distance to the crane wall from the pipe break, the direct jet force on the crane wall is small and no formal calculation of jet effects was judged to be required. Our current analyses support this, as they show that, even if these jet impingement forces were considered, the concrete structural integrity will not be impaired. This further validates the original Diablo Canyon design.

C. DCP RESPONSE (continued)

2.4 Piping System Quality

The evaluation of the effects of pipe break at the Diablo Canyon plant is predicated upon the occurrence of a break in a high energy line. However, much work has been performed to demonstrate that such failures are highly unlikely. This piping is of a high quality, and work on the reactor coolant loop to demonstrate the unlikelihood of failure has been done specifically for Diablo Canyon. This work is summarized in Section 5.2 of the FSAR. On a generic basis, presentations have been made to the NRC and the ACRS proposing that, for the reactor coolant system (RCS), consideration of breaks be eliminated for structural considerations. These proposals have been based on fracture mechanics studies which conclude that cracking will lead to detectable leaks before any break occurs. These proposals have been favorably received by both the NRC and ACRS. The NRC is presently in the process of revising its position on RCS pipe break as delineated in Standard Review Plan Sections 3.6.1 and 3.6.2 and Regulatory Guide 1.46.

Application of the revised NRC position may also be extended to the other high-energy lines inside containment. This piping has been fabricated from high-strain capability materials which are similar in character to the reactor coolant loop material. These piping systems were then inspected, hydro-tested, and accepted for service using rigorous and detailed procedures. The seismic design of these piping systems has been thorough and analysis has demonstrated that failure of the piping will not occur in the case of an earthquake.

Thus, the quality and material properties of the piping, the extent of inspection, and the inherent margin introduced by design and analysis lead to the conclusion that postulated ruptures have a very low probability of occurrence.

C. DCP RESPONSE (continued)

2.5 Seismic Design of Piping and Systems

The ability of a piping system to withstand off-normal loads is dependent upon its design. Diablo Canyon piping systems are designed for seismic loads from the DE, DDE, and Hosgri event and have been repeatedly analyzed for these loadings. These design requirements have increased the inherent capability of the piping systems to withstand other off-normal events to several times greater than other "non-West Coast" plants. Thus, while jet impingement loads are not explicitly included in the piping system design, the seismic design of piping systems to the levels determined to be appropriate for the plant site provides inherent conservatism and has increased the piping capability to withstand jet effects from postulated pipe breaks.

3.0 SUMMARY

The Project has conducted an exhaustive analysis of the effects of jet impingement inside containment utilizing screening criteria based upon current NRC/industry guidelines. However, these criteria significantly exceed the FSAR commitment on pipe break dynamic effects, which generally limits itself to consideration of blowdown reactive forces and pipe whip. Jet impingement is only considered as it affects containment internal structures as defined in FSAR Section 3.8. Nonetheless, the recent verification analysis has shown that the design not only complies with the FSAR commitment, but also generally satisfies current criteria. In those instances where it does not, other aspects of the plant design have increased its inherent capability to withstand or serve to limit the effects of other off-normal events not explicitly included in the analysis. However, a design-basis pipe break has been shown to be an extremely low-probability event. The NRC is currently revising its position to eliminate consideration of breaks for RCS piping based on the low probability of the event and the undesirability of additional structures and barriers that adversely affect maintenance and inspection. The application of this revised position is expected to be extended to other high-energy piping systems inside containment. Thus, the older Diablo Canyon criteria is consistent with current trends in the industry in the area of jet impingement effects.

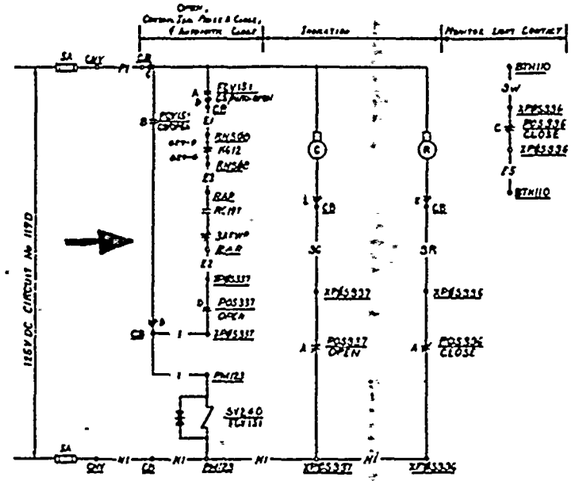

FCV151 STEAM GEN. 1-1 BLOWDOWN TANK INLET - CKT. 10240SV01

OTHER VALVES SIMILAR AS SHOWN BELOW

VALVE NO	DESCRIPTION	DC CKT NO	CKT NO	VALVE LOC	SOL. VLV NO	SOL VLV LOC	VLV POS SW CONTACTS CLOSE	OPEN	DEVICE	LOC	CONTACT	DEVICE	LOC	CONT	AUX PMP START DEVICE	LOC	CONT
FCV151	STM GEN 1-1 BLOWDN TK. IN	195D	2PM5337	FCV151	240	PM123	336	337	EG17	RK500		RC197	RAR		3APMP	RAR	
FCV154	1-2	190D	2PM5337	FCV154	239	PM123	334	335	EG2	RK500		RC197	RAR		3APMP	RAR	
FCV157	1-3	360D	2PM5337	FCV157	238	PM123	331	333	EG7	RK500		RC197	RAR		3APMP	RAR	
FCV160	1-4	380D	2PM5337	FCV160	237	PM123	330	331	EG7	RK500		RC197	RAR		3APMP	RAR	

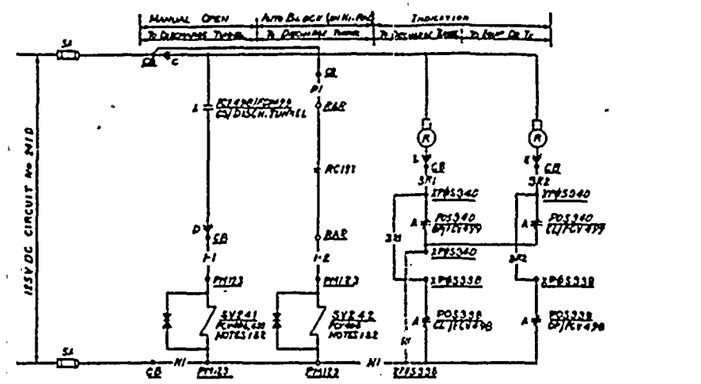

FCV498, 499 BLOWDOWN TANK OUTLET VALVES - CKT. 10241SV01

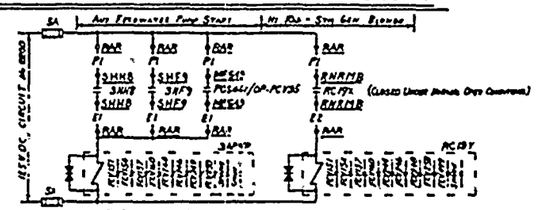

AUXILIARY RELAYS - ASSOCIATED CKT NOS SHOWN IN TABLE

DEVICE CONTACT	3HH8	3HF9	POS441/OP-PCV135	RC19
CIRCUIT NO	HOBH14	POBH14	543P07	2DO13PM3

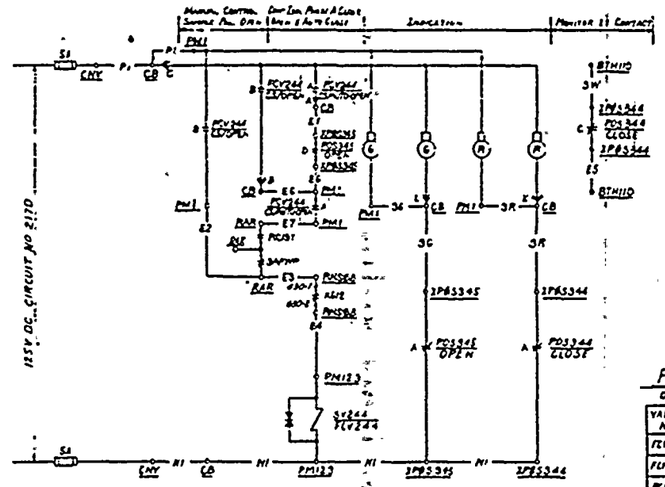

FCV244 STEAM GEN. 1-4 BLOWDOWN SAMPLE - CKT 10244SV01

OTHER VALVES SIMILAR EXCEPT AS SHOWN BELOW

VALVE NO	DESCRIPTION	DC CKT NO	CKT NO	VALVE LOC	SOL. VLV NO	SOL VLV LOC	VLV POS SW CONTACTS CLOSE	OPEN	DEVICE	LOC	CONTACT	DEVICE	LOC	CONT	AUX PMP START DEVICE	LOC	CONT
FCV244	STM GEN 1-4 BLOWDN SAMPLE	217D	2PM5337	FCV244	244	PM123	344	345	EG2	RK500		RC197	RAR		3APMP	RAR	
FCV246	1-3	217D	2PM5337	FCV246	246	PM123	348	349	EG2	RK500		RC197	RAR		3APMP	RAR	
FCV243	1-2	119D	2PM5337	FCV243	247	PM123	352	353	EG2	RK500		RC197	RAR		3APMP	RAR	
FCV245	1-1	117D	2PM5337	FCV245	250	PM123	356	357	EG2	RK500		RC197	RAR		3APMP	RAR	

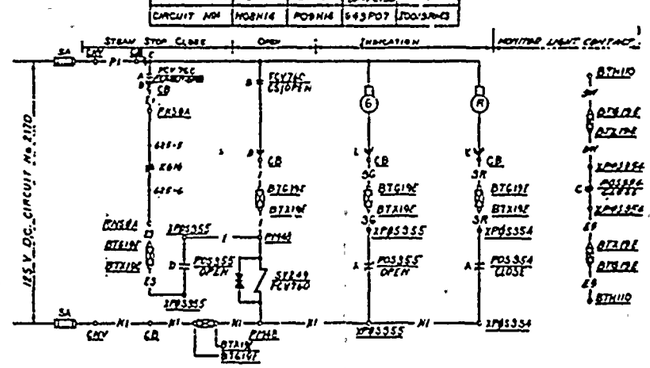

FCV760 - STEAM GEN. 1-1 BLOWDOWN ISOL. VLV - CKT. 10249SV01

OTHER VALVES SIMILAR EXCEPT AS SHOWN BELOW

VALVE NO	DESCRIPTION	DC CKT NO	CKT NO	VALVE LOC	SOL. VLV NO	SOL VLV LOC	PEN NO	VLV POS SW STEAM STOP CLOSE	OPEN	DEVICE	LOC	ALARM CKT NO CONTACT	BLOWDOWN ISO.
FCV760	STM. GEN 1-1 BLOWDN ISOL	217D	2PM5341	FCV760	249	PM123	198	354	355	EG16	RK500		
FCV761	1-2	217D	2PM5341	FCV761	247	PM123	198	200	199	EG16	RK500		
FCV762	1-3	360D	2PM5341	FCV762	245	PM123	128	196	197	EG26	RK500		
FCV763	1-4	380D	2PM5341	FCV763	243	PM123	128	192	193	EG22	RK500		

CONTROL SWITCH FCV151, FCV154, FCV157, FCV160 CS, CS, CS, CS; FCV244, FCV246, FCV243, FCV250 CS, CS, CS, CS

USED AT LOCATION CR
SPRING RETURN TO AUTO FROM OPEN

CONTACT	POSITION CLOSE	AUTO	OPEN	REMARKS
A		X	X	THIS DWG
B			X	THIS DWG

CONTROL SWITCH FCV498/FCV499 CS

USED AT LOCATION CR
NO SPRING RETURN

CONTACT	POSITION		REMARKS
A	X		THIS DWG
B		X	SPARE

CONTROL SWITCH FCV244, FCV246, FCV243, FCV250 CS, CS, CS, CS

USED AT LOCATION PM1
SPRING RETURN TO AUTO

CONTACT	POSITION CLOSE	AUTO	OPEN	REMARKS
A		X	X	THIS DWG
B			X	THIS DWG

CONTROL SWITCH FCV762, FCV761, FCV763, FCV763 CS, CS, CS, CS

USED AT LOCATION CR
SPRING RETURN TO NEUTRAL FROM OPEN

CONTACT	POSITION CLOSE	NEUTRAL	OPEN	REMARKS	REMARKS FOR RC19 RELAY
A			X	RED LIGHT	RED LIGHT
B	X			SPARE	ALARM
C			X	MONITOR L?	MONITOR L?
D	X			SPARE	SPARE

VALVE CLOSE POSITION SWITCH

Typical

CONTACT	POSITION CLOSE	OPEN	REMARKS
A	X		GREEN LIGHT
B		X	SPARE
C	X		SPARE
D		X	SEAL IN

VALVE OPEN POSITION SWITCH

Typical

CONTACT	POSITION CLOSE	OPEN	REMARKS
A		X	RED LIGHT
B	X		SPARE

FCV 498 499 CLOSE POSITION SWITCH
POS 338, POS 340

CONTACT	POSITION CLOSE	OPEN	REMARKS
A	X		GREEN LIGHT
B		X	SPARE

FCV498 499 OPEN POSITION SWITCH
POS 338 POS 340

TABLE OF DEVICES

DEVICE NO	FUNCTION	RATING	MFR	TYPE	DWG	REMARKS
3APMP	Aux Feedwater Pp Start Aux Rly	125VDC	GE Co	[illegible]	[illegible]	[illegible]
RK500	Containment Sol. Phase A Aux Rly	—	—	—		
RK16, RK23	Steam Stop Auxiliary Relay	—	—	—		
RC197	Sys Gen Blowdown Auxiliary Rly	125V DC	GE Co	[illegible]	[illegible]	
SV237, 238, 239, 240, 241, 242, 243, 244, 245, 246, 247, 248, 249, 250	Solenoid Valve	125V DC	ASCO		[illegible]	Ref. [illegible]
3HH8, 3HF9	Aux Relays to Aux Start Relay	—	—	—		
POS 338 / 340	FCV 95 Open Position Switch	—	—	—		
FCV....	Flow Control Valves					See Table for Valve Nos
POS....	FCV Position Switch					See Table for Switch Nos
RC 171	Sys Gen Blowdown Rad Aux Rly	—	—	—		Contact CV Under Control Room Door

NOTES:

1. WHEN SV241 IS ENERGIZED, FCV499 (BLOWDN TK TO EQUIP DRAIN TK) CLOSES WHILE FCV498 (BLOWDN TK TO DISCHARGE TUNNEL) OPENS IF THERE IS NO HIGH RADIATION PRESENT.
2. HIGH RADIATION SIGNAL DE-ENERGIZES SV242 WHICH WILL AUTOMATICALLY CLOSE FCV498 EVEN IF SV 241 IS HELD ENERGIZED

PRC APERTURE CARD

EQUIPMENT LOCATION NUMBERS

CHY - Control Room - Chemical & Volume Control System
CB - Control Room - Compartment C (Reactor) (@ 115ft)
RAR - Rack Auxiliary Relay (By PG&E)
RK500 - Rack Nuclear Safeguards Outlet
BTH110 - Terminal Box H110
PM123 - Mechanical Penet. No 123 Blowdown Tank
PM1 - Mechanical Penet. No 1 Sample
2PM5336 - Equipment POS336 (Local Mounted)
SA1 - Sub CHY Bus Cub B
CB649 - FCV95 - Aux Feed Turbin Steam Supply
RK498 - Rack Nuclear Position Monitor Cab B

Also Available On Aperture Card

UNITS 1 AND 2
DIABLO CANYON SITE

FIGURE 7.3-47
SCHEMATIC DIAGRAM
STEAM GENERATOR BLOW DOWN
SOLENOID VALVES

Amendment 8 May 1974

8309260140-01

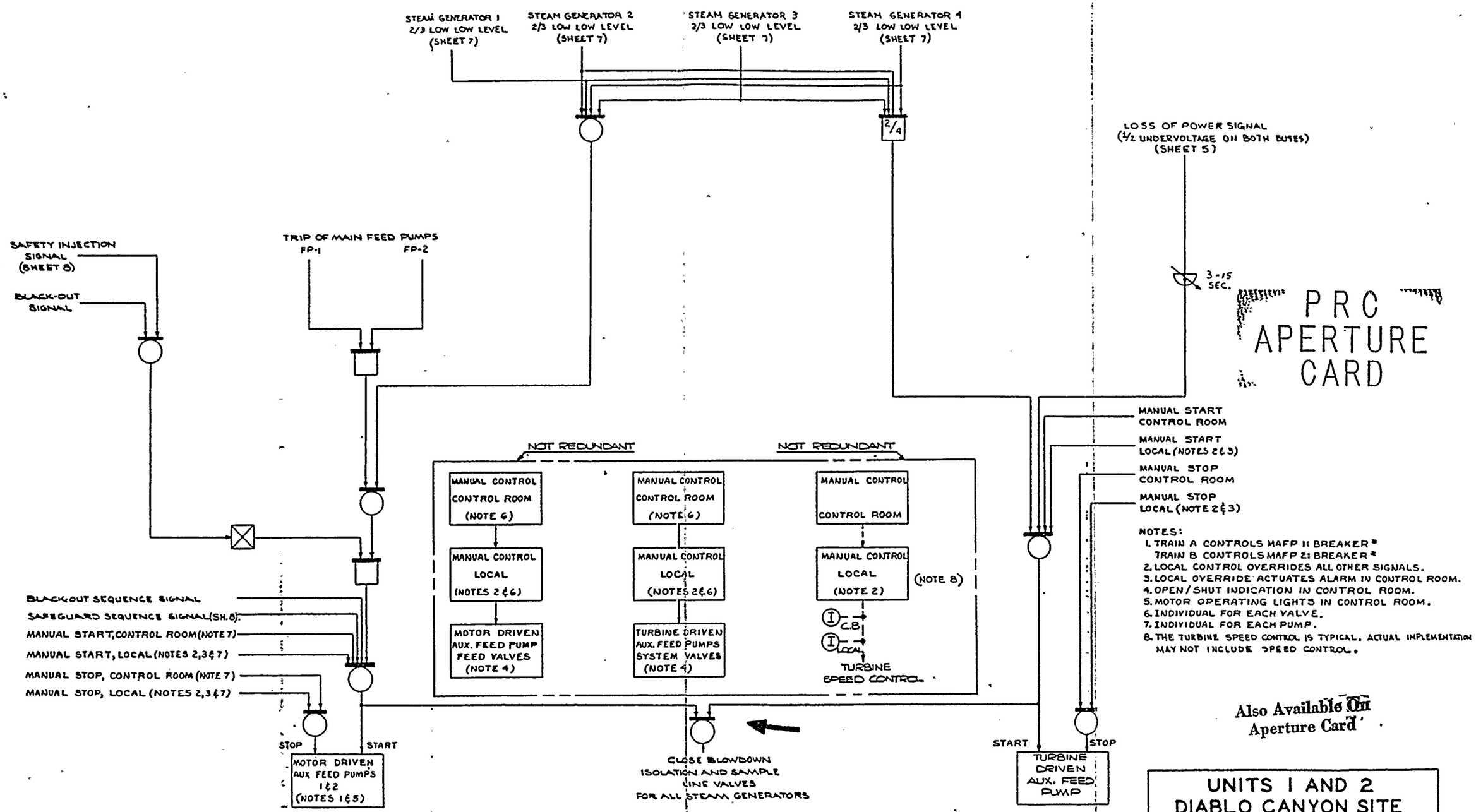

NOTES:

1. TRAIN A CONTROLS MAFP 1: BREAKER *
   TRAIN B CONTROLS MAFP 2: BREAKER *
2. LOCAL CONTROL OVERRIDES ALL OTHER SIGNALS.
3. LOCAL OVERRIDE ACTUATES ALARM IN CONTROL ROOM.
4. OPEN / SHUT INDICATION IN CONTROL ROOM.
5. MOTOR OPERATING LIGHTS IN CONTROL ROOM.
6. INDIVIDUAL FOR EACH VALVE.
7. INDIVIDUAL FOR EACH PUMP.
8. THE TURBINE SPEED CONTROL IS TYPICAL. ACTUAL IMPLEMENTATION MAY NOT INCLUDE SPEED CONTROL.

UNITS 1 AND 2
DIABLO CANYON SITE

FIGURE 7.2-1
INSTRUMENTATION AND CONTROL SYSTEM LOGIC DIAGRAM
(SHEET 15 OF 16)