REGULATORY INFORMATION DISTRIBUTION SYSTEM (RIDS)

ACCESSION NBR:8308010470 DOC.DATE: 83/07/29 NOTARIZED: NO DOCKET #
FACIL:50-323 Diablo Canyon Nuclear Power Plant, Unit 2, Pacific Ga 05000323
AUTH.NAME AUTHOR AFFILIATION
SCHUYLER,J.O. Pacific Gas & Electric Co.
RECIP.NAME RECIPIENT AFFILIATION
KNIGHTON,G.W. Licensing Branch 3

SUBJECT: Forwards response to 801222 ltr re NUREG-0612, "Control of Heavy Loads at Nuclear Power Plants." Substantive differences between Unit 1 & 2 rept marked to facilitate review.Fold-out pages encl. "All repts"

DISTRIBUTION CODE: B030S COPIES RECEIVED:LTR 2 ENCL 40 SIZE: 150
TITLE: Licensing Submittal: Control of Heavy Loads Near Spent Fuel (USI A-36

NOTES:J Hanchett icy PDR Documents. 05000323

	RECIPIENT ID CODE/NAME		COPIES LTTR	COPIES ENCL	RECIPIENT ID CODE/NAME		COPIES LTTR	COPIES ENCL
	NRR/DL/ADL		1	0	NRR LB3 BC		1	0
	NRR LB3 LA		1	0	BUCKLEY,B.		1	1
INTERNAL:	ELD/HDS2		1	0	NRR REQUA,G		1	1
	NRR SINGH,A	01	4	4	NRR/DL/SSPB		1	1
	NRR/DSI/AEB	26	1	1	NRR/DSI/CPB	10	1	1
	NRR/DSI/METB	12	1	1	NRR/DSI/RSB	23	1	1
	REG FILE	04	1	1	RGN5		1	1
	RM/DDAMI/MIB		1	0				
EXTERNAL:	ACRS	41	6	6	LPDR	03	2	2
	NRC PDR	02	1	1	NSIC	05	1	1
	NTIS		1	1				
NOTES:			1	1				

All Extras to B. Buckley

TOTAL NUMBER OF COPIES REQUIRED: LTTR 30 ENCL 25

PACIFIC GAS AND ELECTRIC COMPANY

PG&E 77 BEALE STREET • SAN FRANCISCO, CALIFORNIA 94106 • (415) 781-4211 • TWX 910-372-6587

J. O. SCHUYLER
VICE PRESIDENT
NUCLEAR POWER GENERATION

July 29, 1983

Mr. George W. Knighton
Licensing Branch No. 3
Division of Licensing
Office of Nuclear Reactor Regulation
U. S. Nuclear Regulatory Commission
Washington, D.C. 20555

Re: Docket No. 50-323
Diablo Canyon Unit 2
Control of Heavy Loads (NUREG-0612)

Dear Mr. Knighton:

The enclosed report contains PGandE's response to NUREG-0612, "Control of Heavy Loads at Nuclear Power Plants" for Diablo Canyon Unit 2. It provides the information required to complete the response to Mr. D. G. Eisenhut's letter of December 22, 1980. This report is similar to PGandE's response to NUREG-0612 for Unit 1 which was submitted to the NRC on May 9, 1983 and amended on July 28, 1983.

To facilitate your review, substantive differences between the Unit 1 and Unit 2 reports are marked with a sidebar in the left margin. Changed references from "Unit 1" to "Unit 2" and changed identification numbers between equivalent lifting systems in the two units were not considered substantive. The differences between the Unit 1 and Unit 2 reports are as follows:

1. The Unit 1 report contains an analysis of shared buildings and areas. These include the Auxiliary Building, the Intake Structure, the Radwaste Storage Building, the Hot Shop in the Fuel Handling area, and the Cold Shop in the Turbine Building. That analysis is not repeated in this report. As a result, the crane lists, crane description section, procedures list, heavy loads table, and the load/impact matrix are shorter, since most of the Category 1 monorails are in the previously analyzed Auxiliary Building. The discussions of Mechanical Stops and Load Scheduling on page 2.4-18 were also simplified by omitting references to the Auxiliary Building. Finally, the reliability analysis of the Intake Structure load block load was eliminated.

2. The Unit 1 and Unit 2 Load/Impact Matrices (Table 2.4.2-1) have changed substantially because of different routings of safe shutdown pipes, conduits, and tubing.

B030
1/40

3. Because of the changes as noted above, the number of required floor penetration analyses was reduced from nine in the Unit 1 report to one in the attached Unit 2 report. This reduction eliminated the need in this submittal for Table 2.4.2-2, "Load Drops Requiring Floor Structural Evaluations". The one remaining floor penetration analysis for the Turbine Building is described, along with the Turbine Building generic floor penetration analysis for loads weighing less than 5.5 tons, in Section 2.4.2.d and Appendix C.

Kindly acknowledge receipt of this material on the enclosed copy of this letter and return it in the enclosed addressed envelope.

Sincerely,

J O Schuyler

Enclosures

cc: Service List

DIABLO CANYON UNIT 2
NUREG-0612 SUBMITTAL

TABLE OF CONTENTS

8308010470

LIST OF TABLES

LIST OF FIGURES

NRC Request (Enclosure 3)

2.1 GENERAL REQUIREMENTS FOR OVERHEAD HANDLING SYSTEMS

"NUREG-0612, Section 5.1.1, identifies several general guidelines related to the design and operation of overhead load-handling systems in the areas where spent fuel is stored, in the vicinity of the reactor core, and in other areas of the plant where a load drop could result in damage to equipment required for safe shutdown or decay heat removal. Information provided in response to this section should identify the extent of potentially hazardous load-handling operations at a site and the extent of conformance to appropriate load-handling guidance."

PGandE Response

2.1

Through a letter from D. G. Eisenhut dated December 22, 1980, the NRC requested all licensees and applicants to provide information on load handling operations at nuclear power plants. Enclosure 1 to that letter, NUREG-0612 (Control of Heavy Loads at Nuclear Power Plants), included guidelines for implementation by licensees and applicants to ensure the safe handling of heavy loads. Enclosure 3, "Request for Additional Information, Control of Heavy Loads", requested further information from licensees and applicants on how they will comply with the NUREG-0612 guidelines.

This is PGandE's point-by-point response to Enclosure 3, for the Diablo Canyon Power Plant (DCPP), Unit 2. In it, PGandE has identified the extent of potentially hazardous load-handling operations at DCPP and has determined the extent of conformance to the appropriate load-handling guidelines. This report is presented in the same format as the Staff's request, and has been prepared with minimal reference to other materials.

The auxiliary building, intake structure and solid radwaste storage building are common to the two units at Diablo Canyon, and were covered in their entirety in PGandE's Unit 1 response; therefore, they will not be covered here. The turbine building will be covered from column 19 south.

NRC Request (Enclosure 3)

2.1.1

"Report the results of your review of plant arrangements to identify all overhead handling systems from which a load drop may result in damage to any system required for plant shutdown or decay heat removal (taking no credit for any interlocks, technical specifications, operating procedures, or detailed structural analysis)."

PGandE Response

2.1.1

An extensive review and analysis of the Unit 2 equipment location drawings, and subsequent comprehensive plant walkdowns, have identified the overhead load handling systems which carry heavy loads over components required for plant shutdown or decay heat removal, or over irradiated fuel in the reactor vessel or the spent fuel pool. These are called Category 1 handling systems; they are listed in Table 2.1.1-1, and described below.

The review also identified the overhead load handling systems which could not affect plant safety, either due to sufficient physical separation or where the lift weight is less than the defined heavy load (1813 pounds for DCPP). These are called Category 2 handling systems; they are discussed in Section 2.1.2, along with a detailed discussion of the criteria by which they are placed in that category.

The major Category 1 overhead load handling systems at Diablo Canyon are:

C-140-07 Containment Structure Polar Crane - The containment structure polar crane is an overhead gantry crane located on top of the circular crane wall at elevation 140' (top of rail). This polar crane has a main hook capacity of 200 tons and an auxiliary hook capacity of 35 tons. Its arrangement is shown in Figure 2.1.1-1.

It is not anticipated that the polar crane will be used to lift heavy loads during operational modes 1 (power operation), 2 (start-up), 3 (hot standby), or 4 (hot shutdown). In the unlikely event that it becomes necessary to lift a heavy load with the polar crane during any of these operational modes, the specific lift will be approved by the Plant Staff Review Committee (PSRC) as complying with the guidelines of NUREG-0612, before performing it.

AF-140-08 Fuel Handling Area Crane - The fuel handling area crane, shown in Figure 2.1.1-2, has a 125-ton capacity main hook, and a 15-ton capacity auxiliary hook. The crane is located in the fuel handling area of the auxiliary building. This crane provides service to both Unit 1 and Unit 2 fuel handling areas and also to the hot machine shop area. The bridge crane spans the width of the fuel handling area, about 30 feet above the operating deck (top of rail at elevation 170').

The crane can be used for movement of new or spent fuel in the fuel handling areas and for movement of equipment in the hot shop area. The fuel handling area crane can be used during any operating mode of the plant.

T-140-01 & T-140-02 Turbine Building Bridge Cranes - There are two turbine building bridge cranes which serve the Unit 1 and Unit 2 turbine generators. Their arrangement is shown in Figure 2.1.1-3. The cranes span the width of the turbine building, approximately 40 feet above the operating deck (top of rail at elevation 180'-2"). They have a rated capacity of 115 tons each. T-140-01 has a 15-ton capacity auxiliary hook and T-140-02 has a 50-ton capacity auxiliary hook. T-140-01 also has a 5-ton auxiliary monorail on its south girder.

These cranes are used for moving equipment during inspection and maintenance, and may be used during plant operation.

Monorails

Various Category 1 monorails are utilized throughout the turbine and fuel handling buildings for overhead handling of heavy loads. These monorails are single purpose lifting devices, with trolley hoists mounted on fixed structural shapes.

Systems Identification

The following identification system is used in this report:

AF - 100 - 07

Building Identification — AF
Building Floor Elevation — 100
Sequential Crane Number — 07

Building identifications are as follows:

C - Containment Structure
AF - (Auxiliary Building and) Fuel Handling Building
T - Turbine Building

TABLE 2.1.1-1
CATEGORY 1 OVERHEAD HANDLING SYSTEMS

CRANE	DESCRIPTION
C-140-07	200T Containment Structure Polar Crane
C-140-12	2T Reactor Head Stud Tensioner Monorail
C-140-14	15T Missile Shield Hoist
AF-140-08	125T Fuel Handling Area Crane
AF-100-14	3T Monorail for Motor Driven Aux. Feedwater Pump 2-2
T-140-01	115T Turbine Building Bridge Crane
T-140-02	115T Turbine Building Bridge Crane
T-119-13	20T Monorail for Moisture Separator Reheater 2-2A

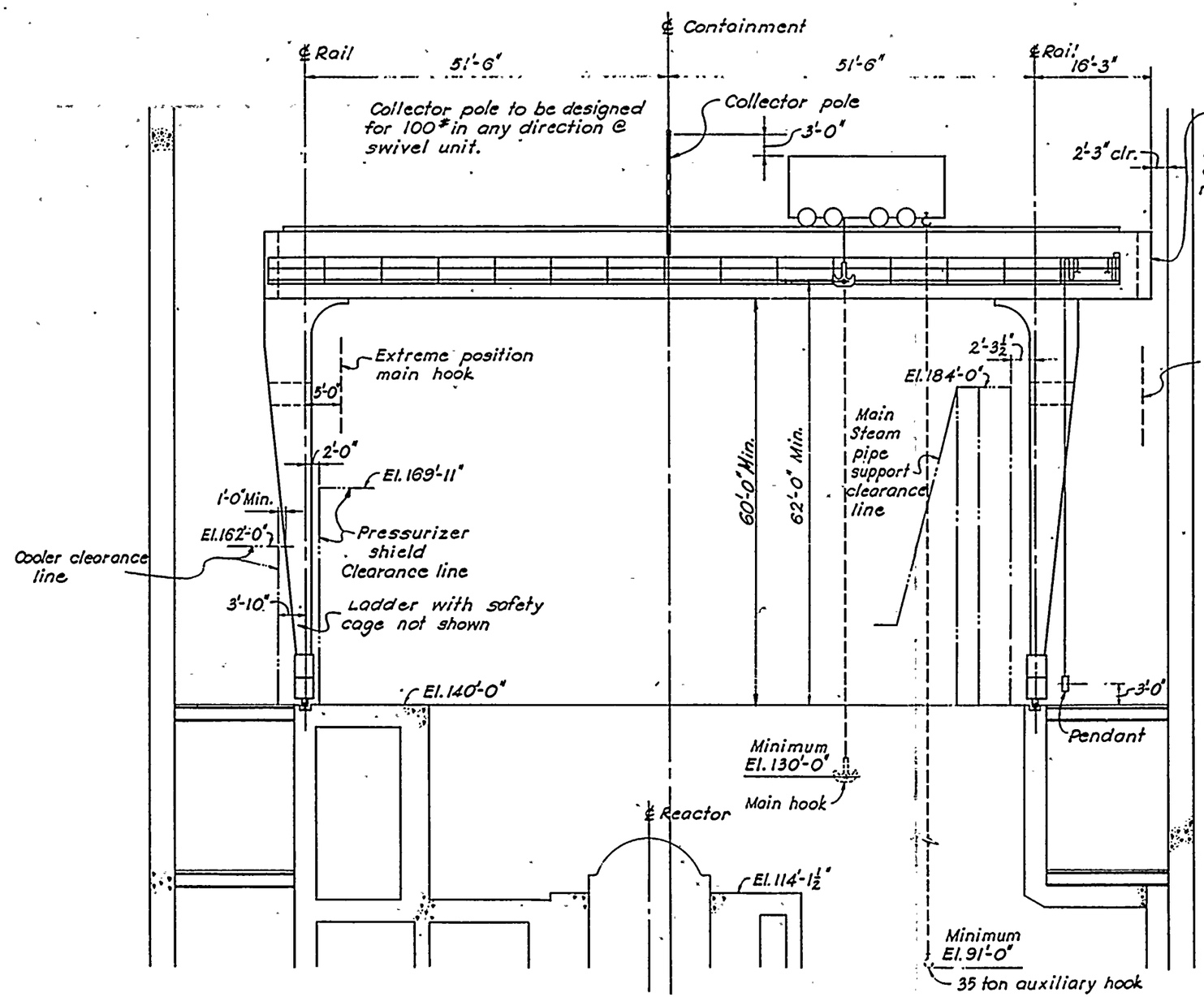

ELEVATION

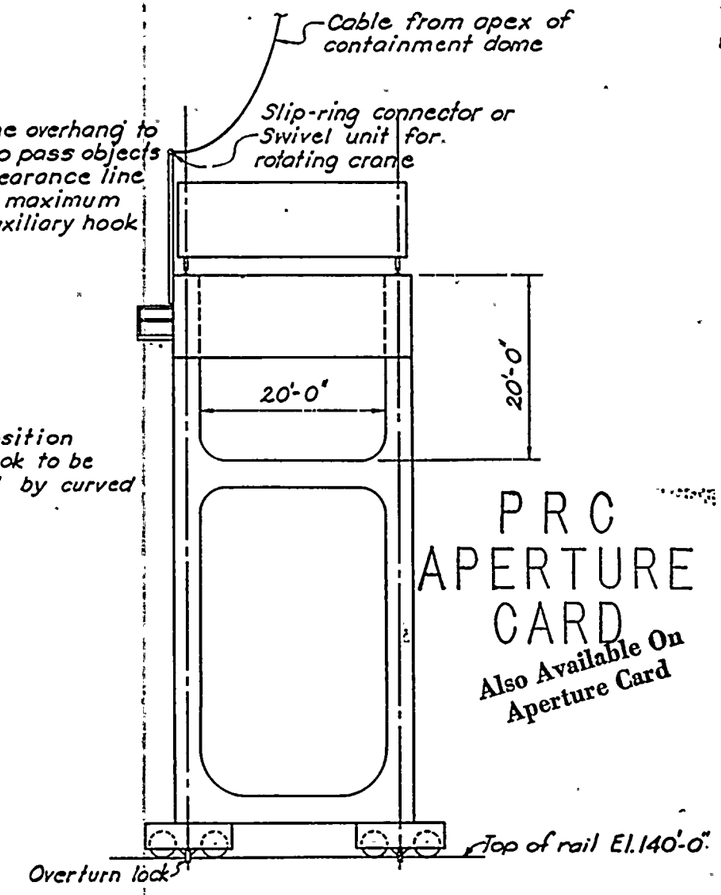

END VIEW

UNIT 2
DIABLO CANYON SITE

FIGURE 2.1.1-1
CONTAINMENT STRUCTURE
POLAR CRANE

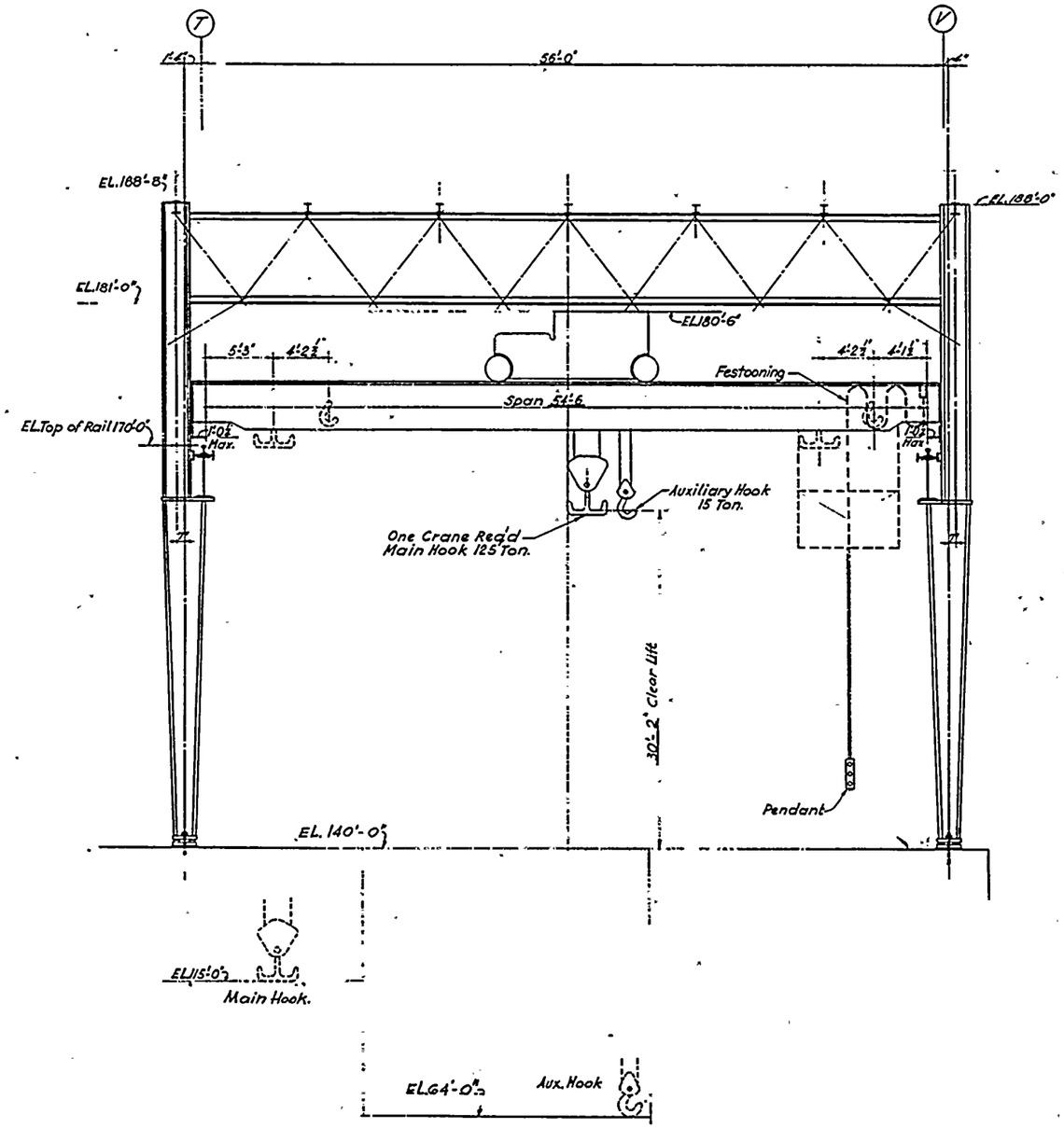

TYPICAL CROSS SECTION

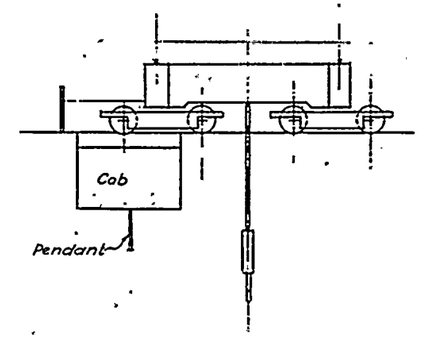

SIDE VIEW

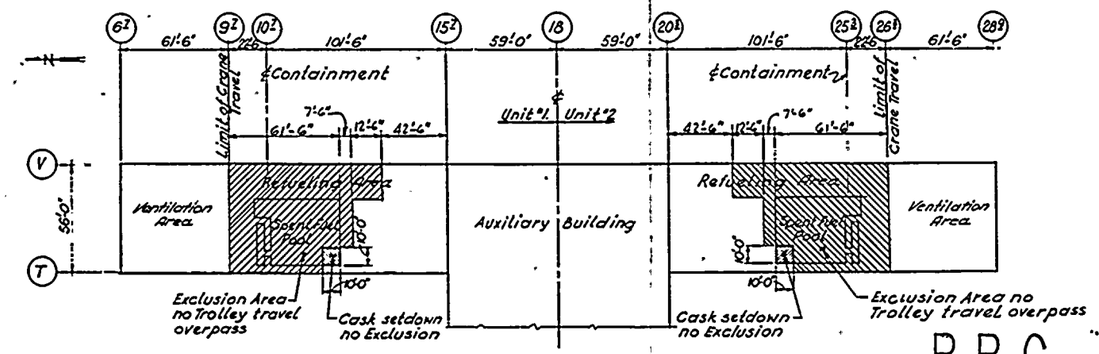

PLAN- TRAVEL LIMITS & EXCLUSION AREA
No Scale

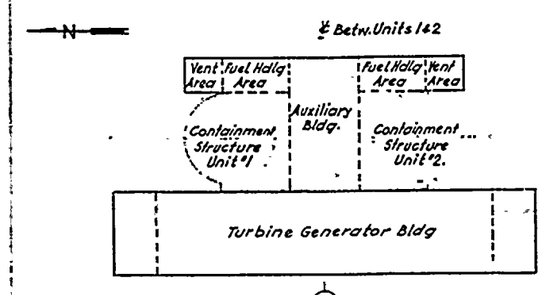

KEY-PLAN

PRC APERTURE CARD

Also Available On Aperture Card

UNIT 2
DIABLO CANYON SITE

FIGURE 2.1.1-2
FUEL HANDLING AREA CRANE

8308010470-02

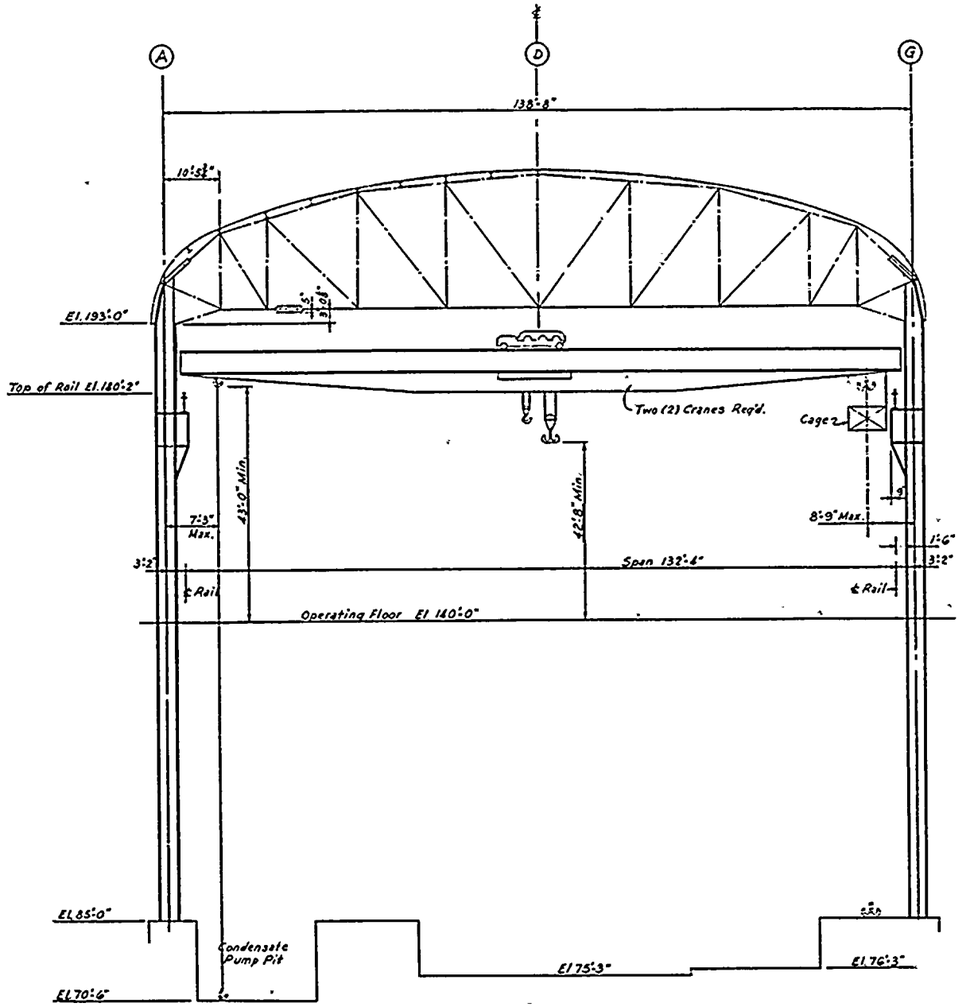

TURBINE BUILDING 115^{T} BRIDGE CRANES

TYPICAL SECTION

Scale: 3/32"=1'-0"

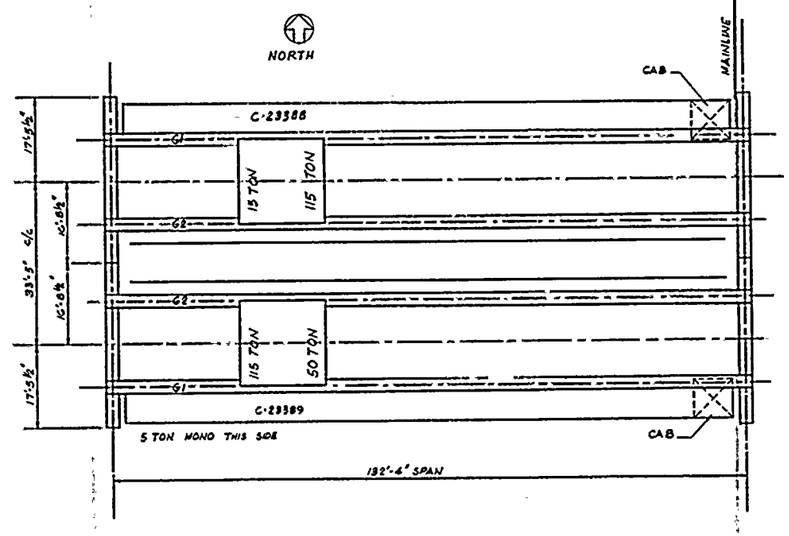

PLAN : BRIDGE CRANE LAYOUT
N.T.S.

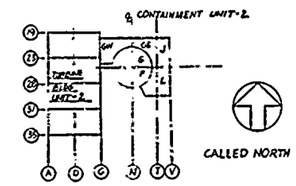

UNIT 2
DIABLO CANYON SITE

FIGURE 24.1-3
TURBINE BUILDING BRIDGE CRANE

NRC Request (Enclosure 3)

2.1.2

"Justify the exclusion of any overhead handling system from the above category by verifying that there is sufficient physical separation from any load-impact point and any safety-related component to permit a determination by inspection that no heavy load drop can result in damage to any system or component required for plant shutdown or decay heat removal."

PGandE Response

2.1.2

As discussed in the response to 2.1.1, comprehensive review and analysis of equipment location drawings in conjunction with subsequent plant walkdown identified overhead load handling systems and separated them into Categories 1 and 2. The systems in Category 2 have no impact on plant shutdown or decay heat removal, and therefore will not receive further consideration in this submittal.

Table 2.1.2-1 lists Category 2 systems that were determined to be "remote", and not potentially hazardous, based upon their physical separation from components required for plant shutdown or decay heat removal. "Physical separation" is defined as horizontal offset between the load path and any target component at any elevation underneath the load, accounting for the widths of the load and the target. In addition, handling systems are included in this category if the only component which could be damaged by the load drop would already be out of service for repair or maintenance.

The remaining systems in Category 2 carry loads that are less than or equal to the heavy load as defined in Section 2.1.1, and therefore are not considered potentially hazardous devices. These "underweight" cranes are listed in Table 2.1.2-2, along with their maximum loads.

TABLE 2.1.2-1
"REMOTE" CATEGORY 2 SYSTEMS

CRANE	DESCRIPTION
AF-100-12	4T Monorail for Spent Fuel Pool Filters
AF-100-13	3T Monorail for Motor Driven Aux. Feedwater Pump 2-3*
AF-100-15	3T Monorail for Motor Driven Aux. Feedwater Pump 2-1*
T-140-05	3T Monorail for Moisture Separator Reheater (MSR) Reheat Safety Valves
T-140-06	3T Jib Boom for MSR Safety Valves
T-119-10	20T Monorail for MSR 2-1A
T-119-11	20T Monorail for MSR 2-1B
T-119-12	20T Monorail for MSR 2-1C
T-119-14	20T Monorail for MSR 2-2B
T-119-15	20T Monorail for MSR 2-2A
T-104-09	20T Monorail for Feedwater Heater 2-4B
T-104-10	20T Monorail for Feedwater Heater 2-3A
T-104-11	20T Monorail for Feedwater Heater 2-4A
T-104-12	20T Monorail for Feedwater Heater 2-3B
T-104-13	20T Monorail for Feedwater Heater 2-3C
T-104-14	20T Monorail for Feedwater Heater 2-4C
T-104-08	5T Monorail for Main Turbine Lube Oil Coolers 2-1, 2-2
T-85-18	Dual 6T Monorail for Diesel Gen. 2-1*
T-85-19	Dual 6T Monorail for Diesel Gen. 2-2*
T-85-20	6T Monorail for Condensate Booster Pump 2-1
T-85-21	6T Monorail for Condensate Booster Pump 2-2
T-85-22	6T Monorail for Condensate Booster Pump 2-3

TABLE 2.1.2-1 (Cont'd)

CRANE	DESCRIPTION
T-85-25	2T Monorail for Component Cooling Water Heat Exchanger 2-2* (Outlet)
T-85-26	2T Monorail for CCW Heat Exchanger 2-1 (Outlet)*
T-85-27	2T Monorail for CCW Heat Exchanger 2-2 (Inlet)*
T-85-28	2T Monorail for CCW Heat Exchanger 2-1 (Inlet)*
T-85-29	1T Monorail for Feedwater Pump 2-1
T-85-30	1T Monorail for Feedwater Pump 2-2
T-85-31	5T Monorail for Htr. No. 2 Drain Tank Pump 2-1

*Note: These monorails are used only after the safe shutdown components under them are out of service.

TABLE 2.1.2-2
"UNDERWEIGHT" CATEGORY 2 SYSTEMS

CRANE	DESCRIPTION	LOAD WEIGHT, LBS
C-140-08	Manipulator Crane	1,813
C-140-09	½T Containment Dome Service Crane	1,000
C-140-10	1T Reactor Cavity Service Crane	1,500
C-140-11	1T Containment Equipment Crane	1,000
C-140-12	1T Rotating Jib for Misc. Equipment	1,600
C-140-13	1T Rotating Jib for Misc. Equipment	1,600
AF-140-10	1/8T Monorail for Roughing Filters	40
AF-140-11	1/8T Monorail for HEPA Filters	40
AF-140-12	1/8T Monorail for HEPA Filters	40
AF-140-13	1/8T Monorail for Carbon Filters	40
AF-140-14	1/8T Monorail for HEPA Filters	40
AF-140-15	1/8T Monorail for Carbon Filters	40
AF-140-18	1T Rotating Jib for Misc. Equipment	1,000
AF-140-16	1T Spent Fuel Bridge Crane	1,813
AF-140-18	1T New Fuel Davit Crane	1,800
AF-115-14	1/8T Monorail for HEPA and Roughing Filters	40
AF-115-15	1/8T Monorail for HEPA Filters	40
AF-115-16	1/8T Monorail for Carbon Filters	40
AF-100-09	1T Monorail for Spent Fuel Pool Pump 2-1	905
AF-100-10	1T Monorail for Refueling Water Purifier Pump 2-1	268
AF-100-11	1T Monorail for Spent Fuel Pool Skim Pump 2-1	186
AF-100-17	1T Monorail for Spent Fuel Pool HX 2-1	1,600

TABLE 2.1.2-2 (Cont'd)

CRANE	DESCRIPTION	LOAD WEIGHT, LBS
T-85-23	1T Monorail for Service Cooling Water Pump 2-1	1,175
T-85-24	1T Monorail for Service Cooling Water Pump 2-2	1,175

NRC Requests (Enclosure 3)

2.1.3

"With respect to the design and operation of heavy-load-handling systems in the reactor building and those load-handling systems identified in 2.1-1, above, provide your evaluation concerning compliance with the guidelines of NUREG-0612, Section 5.1.1. The following specific information should be included in your reply:

2.1.3.a

Drawings or sketches sufficient to clearly identify the location of safe load paths, spent fuel, and safety-related equipment."

PGandE Response

2.1.3.a

Figures 2.1.3.a-1 through 2.1.3.a-7 are equipment layout drawings for Diablo Canyon Unit 2, on which the locations of safe load paths and safe shutdown equipment are clearly identified. Equipment required for safe shutdown" is described in Enclosure 3, Section 1.3. This equipment is highlighted by cross-hatching. Spent fuel is present only in the reactor and the spent fuel pool, which are shown in the layout drawings.

The load paths are identified as follows:

Safe load path for load (general-purpose crane) X ——→ x ——→ x ——→ x

Monorail ▬▬▬▬▬

Safe load paths were developed with the objective of avoiding the spent fuel pool, the reactor cavity, and other safety related equipment where possible. In addition, the structural arrangements beneath the load paths were taken into account so that beams and structural floor members were followed to the extent possible and practical.

Drawings showing the safe load paths for each Category 1 overhead handling system, except for monorails, will be included in the appropriate load handling procedures. The monorails provide their own load path, so administrative control is not needed. "Exclusion area drawings" will also be included or referenced in the procedures, to assure that deviations from the load paths provide level of safety. These drawings are used to define the areas of the floors under general-purpose cranes where safe shutdown capability from the plant operating mode could be lost after a load drop. The procedures will allow deviations from the safe load paths, but will not allow movements over the exclusion areas without prior written approval of the PSRC.

The lifting procedure(s) will require that the rigger-in-charge provide visual aid to the crane operator whenever appropriate, by walking down the load path in advance to assure it is clear, and by directing the lift along the load path with the aid of the detailed drawings in the procedure.

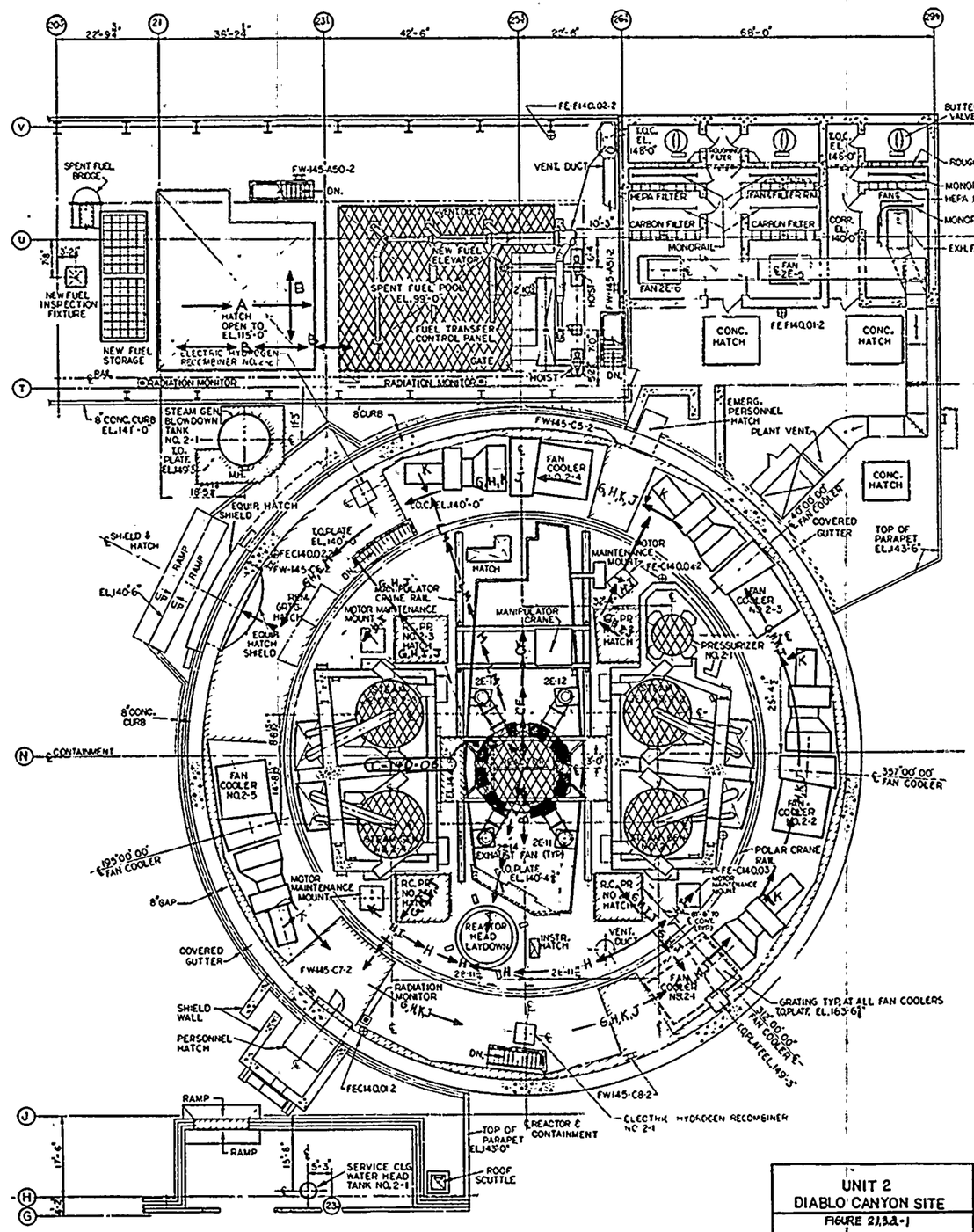

PRC APERTURE CARD

POLAR CRANE C-140-07	
A	REACTOR HEAD W/CRDM
B	UPPER INTERNALS
C	LOWER INTERNALS
E	INTERNAL LIFTING DEVICE
F	HEAD LIFTING DEVICE
G	RCP INTERNALS
H	RCP MOTOR
I	RCP FLYWHEEL
J	RCP HATCH
K	FAN COOLER MOTOR
L	HEAD STUDS IN BASKET
M	REACTOR VESSEL INSPECTION TOOL

FUEL HANDLING CRANE AF-140-08	
A	NEW FUEL IN CANISTER
B	SPENT FUEL IN CASK

Also Available On Aperture Card

10 5 0 10 20 30 40 50

SCALE IN FT.

UNIT 2
DIABLO CANYON SITE
FIGURE 2.1.3.2-1
CONTAINMENT AND FUEL HANDLING BUILDING SAFE LOAD PATHS ELEV. 140'-0"

8308010470-04

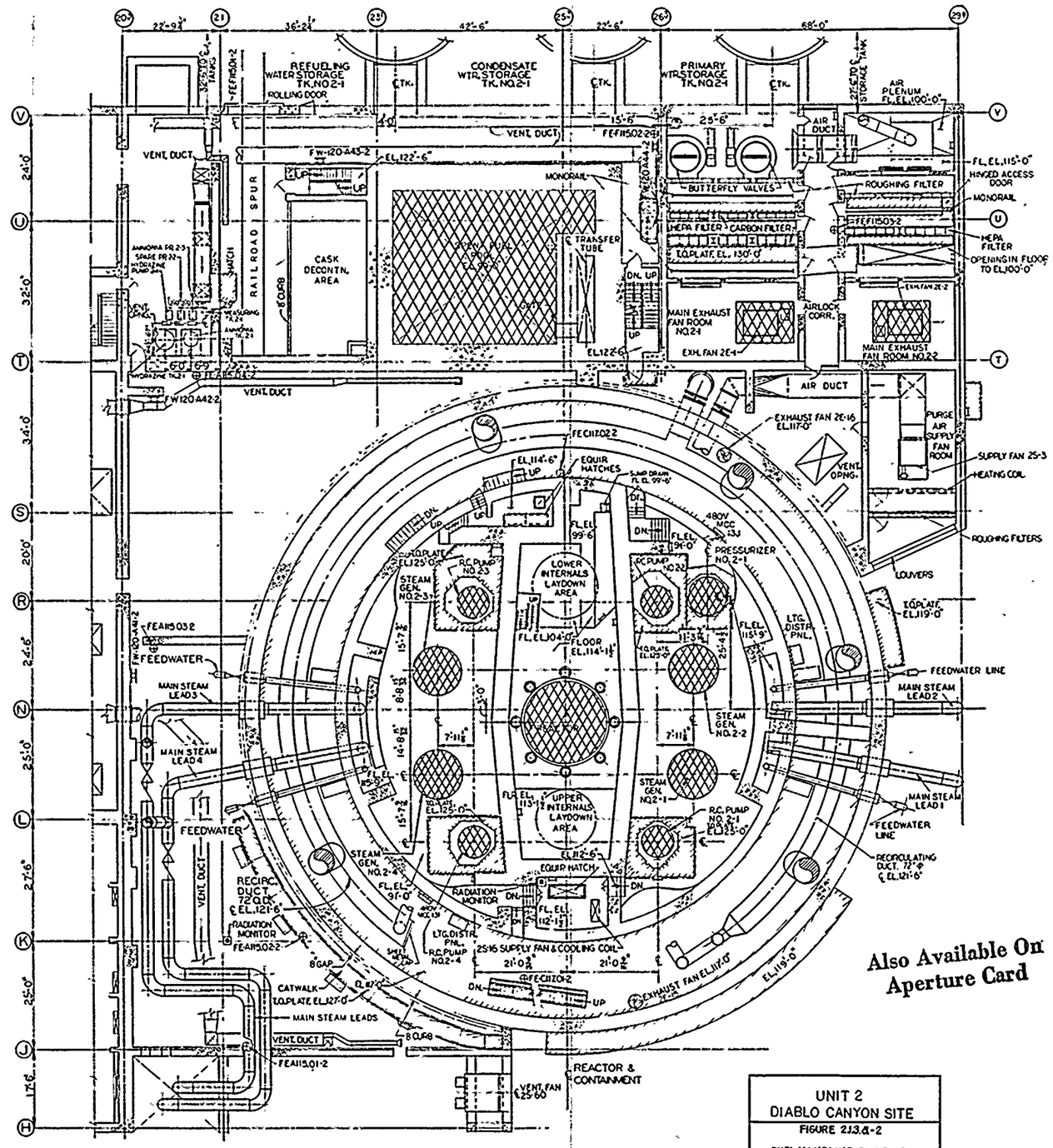

Also Available On Aperture Card

UNIT 2
DIABLO CANYON SITE
FIGURE 2.1.3.d-2
FUEL HANDLING BUILDING MONORAILS ELEV. 115'-0"

PLANT NORTH

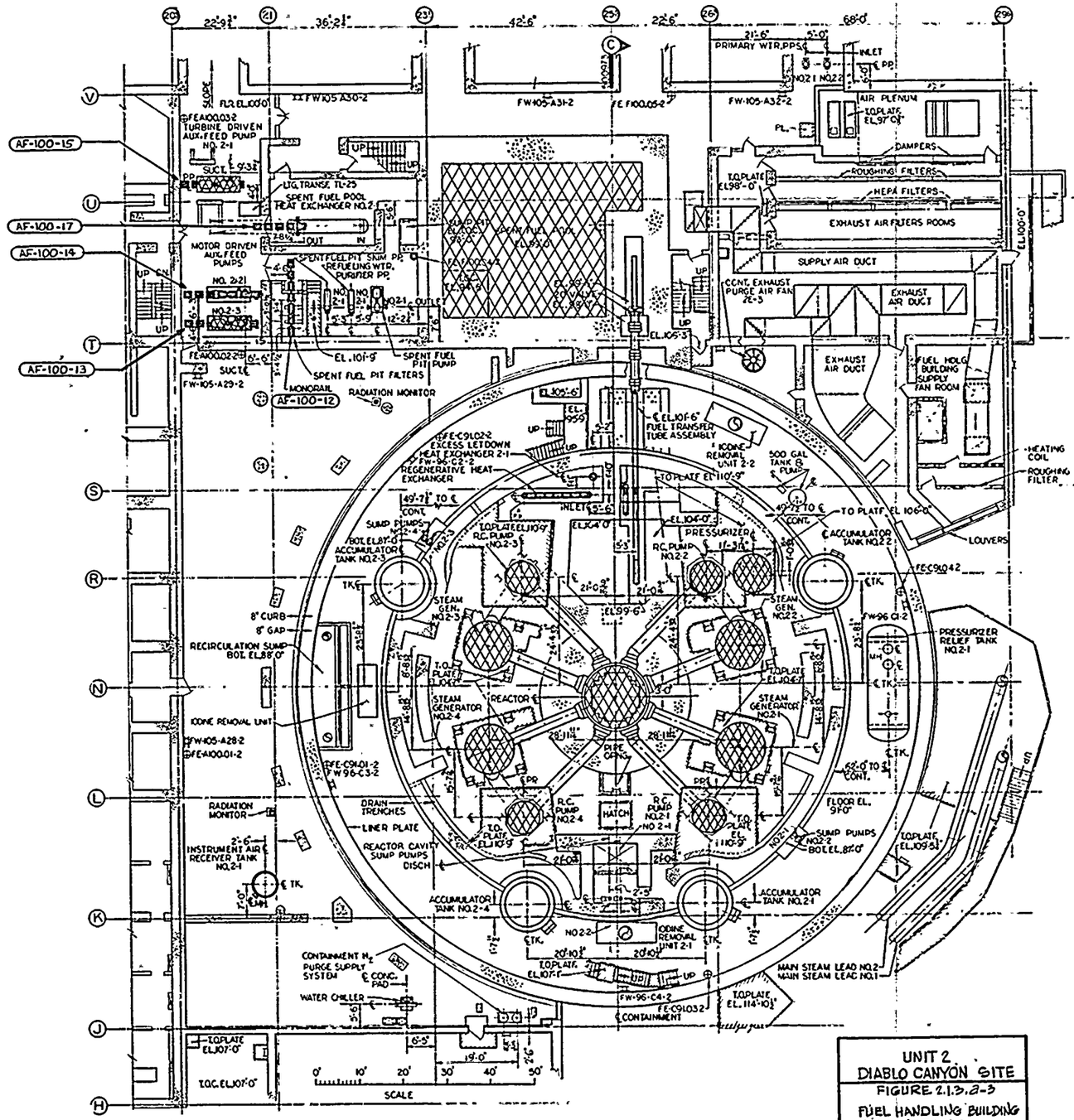

PRC APERTURE CARD

Also Available On Aperture Card

UNIT 2
DIABLO CANYON SITE
FIGURE 2.1.3.2-3
FUEL HANDLING BUILDING MONORAILS ELEV. 100'-0"

10 5 0 10 20 30 40 50
SCALE IN FT.

8308010470-06

TURBINE BUILDING BRIDGE CRANES
T-140-01 & -02

HEAVY LOADS - TURBINE BUILDING	
	ITEM
A	GENERATOR ROTOR
B	EXCITER
C	EXCITER HOUSING
D	REHEAT PIPE ASSEMBLIES
E	L.P. ROTORS
F	H.P. ROTORS
G	CONDENSATE PUMP CASING
H	FEEDWATER PUMP TURBINE
I	L.P. OUTER COVERS
J	L.P. INNER COVERS #1
K	L.P. INNER COVERS #2
L	H.P. COVER
M	H.P. CONTROL VALVES
N	MOBILE CRANE

CALLED NORTH

NOTE: RECTANGULAR AREAS SHOWN IN PHANTOM LINES MARK EQUIPMENT LAYDOWN AREAS.

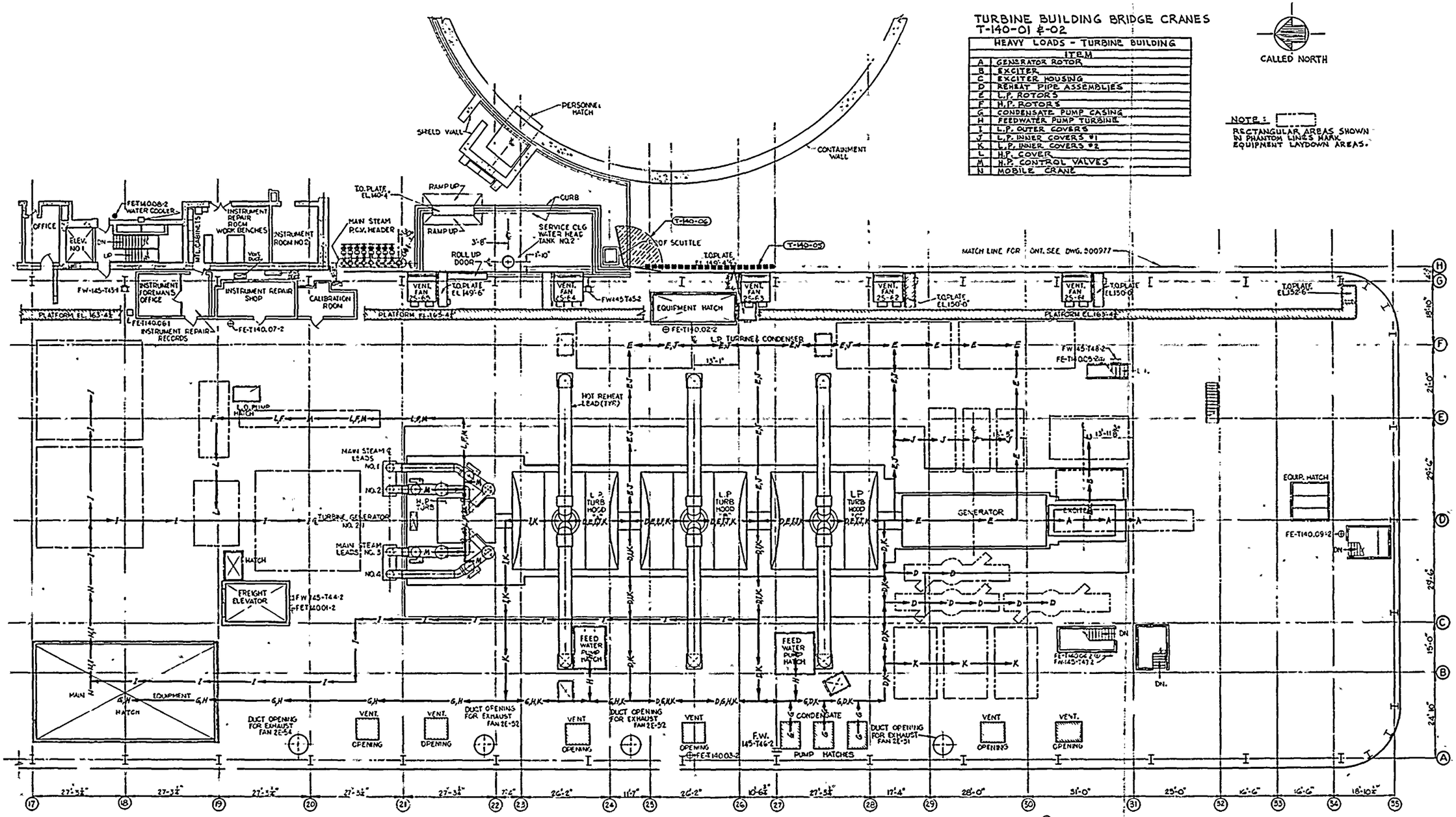

UNIT 2
DIABLO CANYON SITE
FIGURE 2.1.3.4-4
TURBINE BUILDING SAFE LOAD PATHS ELEV. 140'-0"

Also Available On Aperture Card

8308010470-07

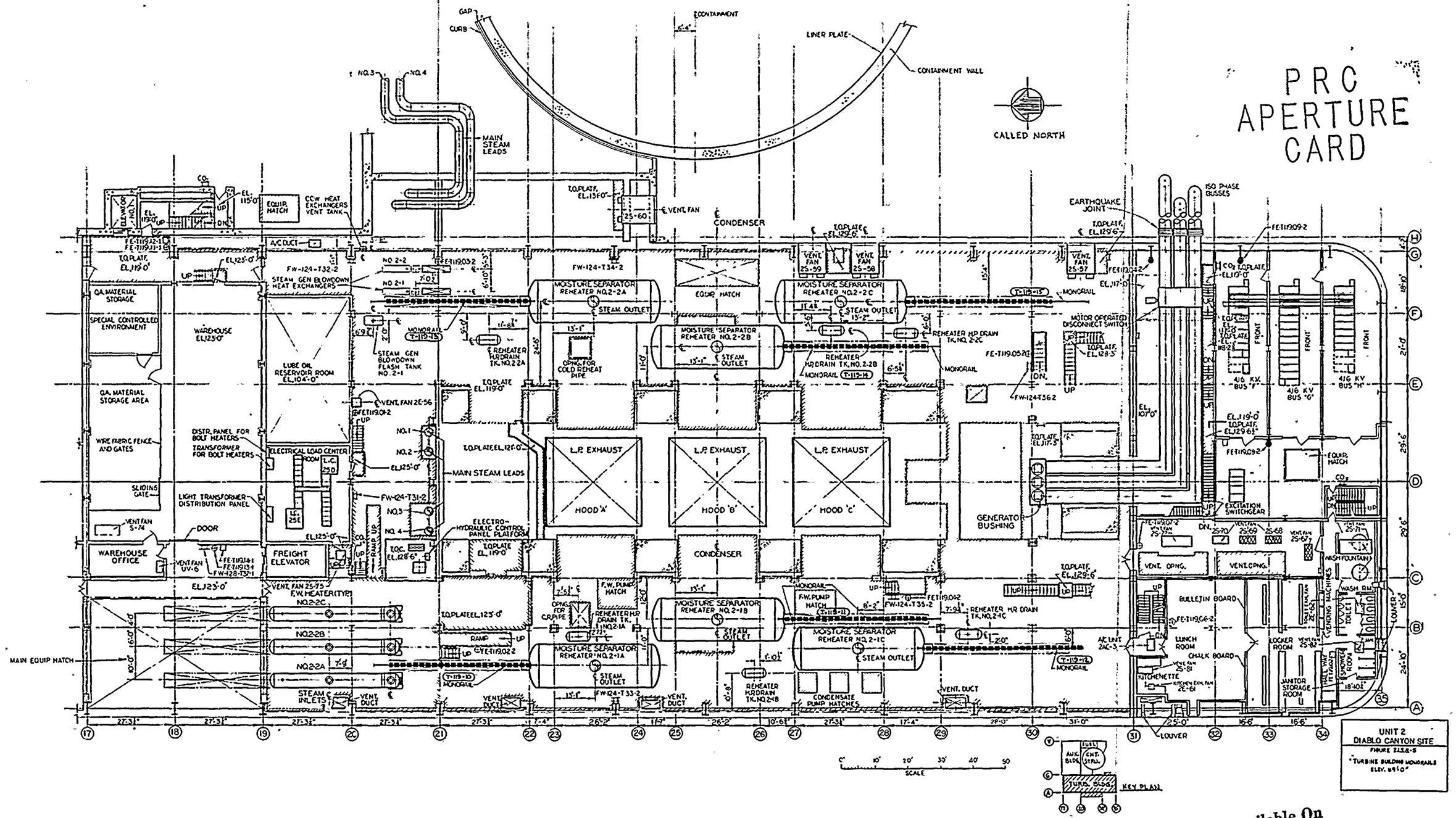

Also Available On Aperture Card

8308010470-08

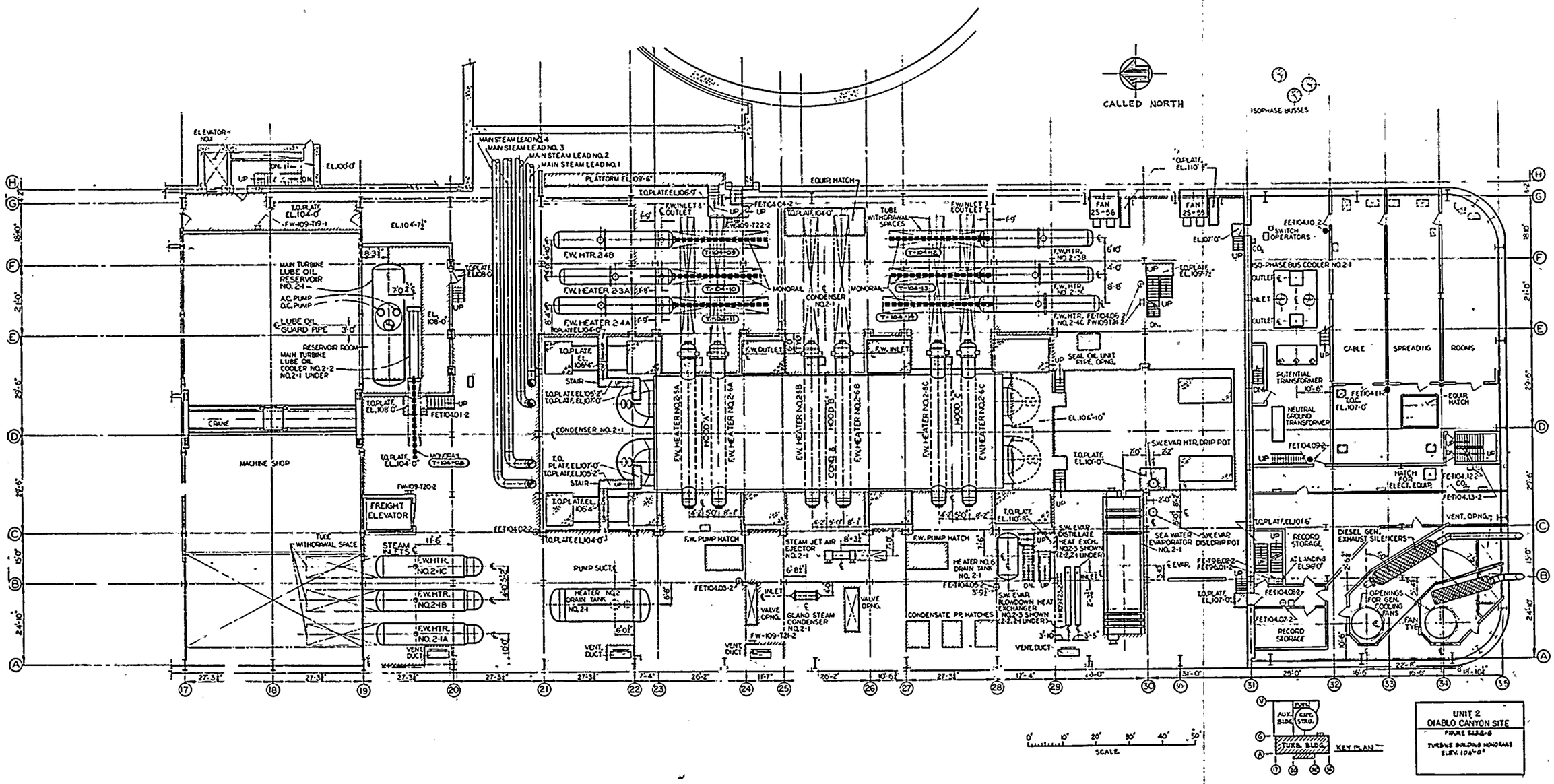

PRC

Also Available On Aperture Card

8308010470-09

PRC APERTURE CARD

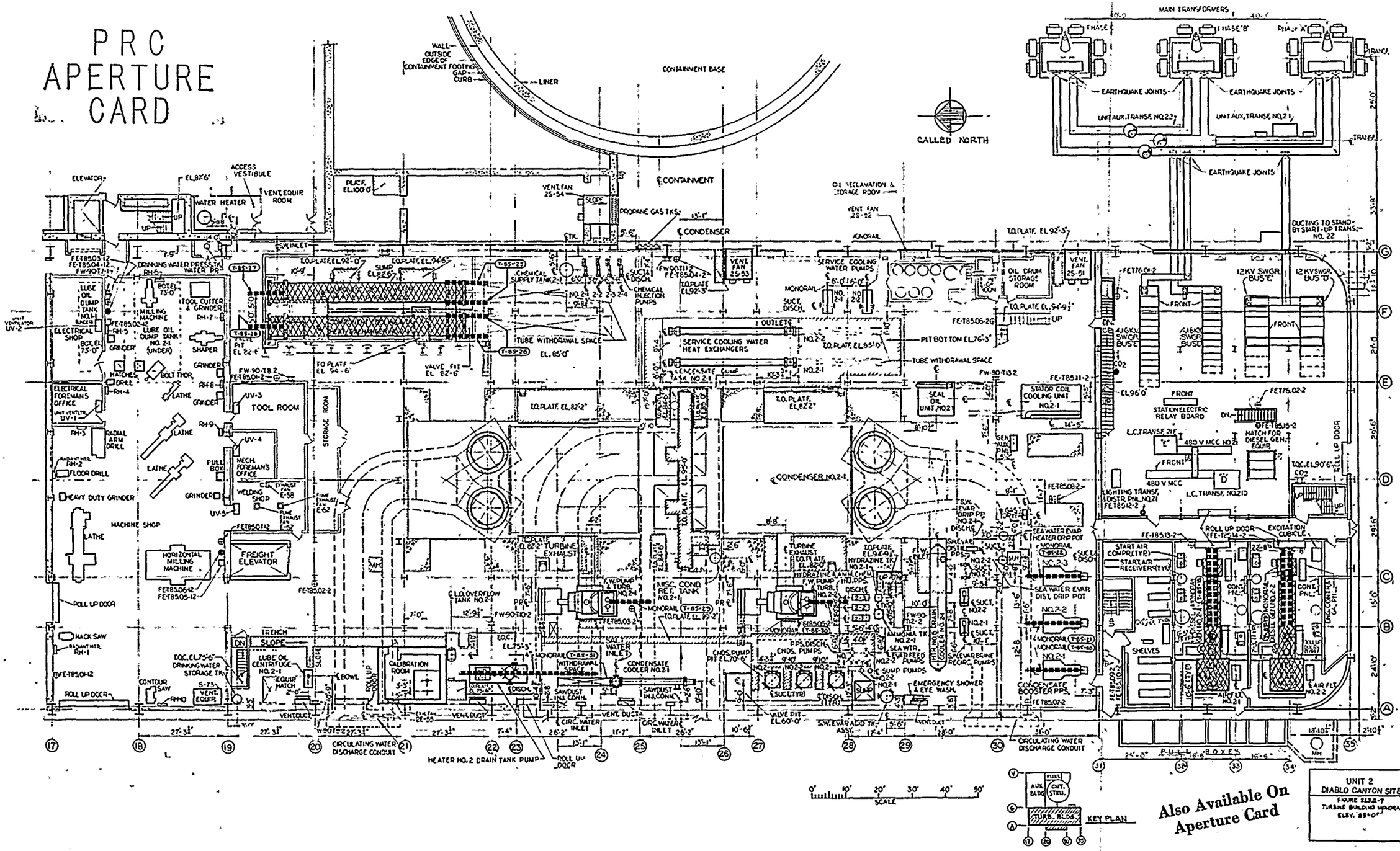

Also Available On Aperture Card

UNIT 2
DIABLO CANYON SITE
FIGURE 2.2.2-7
TURBINE BUILDING MONORAILS
ELEV. 85'-0"

8308010470-10

NRC Request (Enclosure 3)

2.1.3.b

"A discussion of measures taken to ensure that load-handling operations remain within safe load paths, including procedures, if any, for deviation from these paths."

PGandE Response

2.1.3.b

PGandE Nuclear Plant Administrative Procedure C-702 discusses the requirements to be followed when handling heavy loads in all areas of the plant. It will contain or reference the safe load path drawings and exclusion area drawings discussed in Section 2.1.3.a. As noted in that section, Procedure C-702 will require that heavy load movements over exclusion areas be approved by the PSRC.

The titles of other current procedures are listed in Table 2.1.3.b-1; these procedures are available for inspection at the site. They identify major lifts, steps for handling, interlocks, and administrative requirements.

In the future, procedures may be consolidated for similar handling operations, but their substance will maintain equivalent assurance of safe load handling.

TABLE 2.1.3.b-1

MECHANICAL MAINTENANCE PROCEDURES
FOR HEAVY LOADS ON CATEGORY 1 CRANES

NUMBER	TITLE
M- 2.1	Condensate Pump & Motor Removal
3.3	FW Pump Turb Cylinder Cover & Rotor Removal
3.5	Motor Driven AFW Pump & Motor Removal
4.1	HP and LP Turbine Rotor Removal
4.2	HP and LP Turbine Blade Rings Removal
4.3	Turbine Bearing Cover Removal
4.4	HP Turbine Outer Cover Removal
4.5	LP Turbine Outer Cover, Cylinder Covers Removal
4.6	LP Turbine Crossover Tee Removal
4.7	MSR HP & LP Tube Bundle Removal
4.14	HP Turbine Enclosure Handling
4.15	HP Control Valve Handling
6.1	Bldg Heating Reboiler Bundle & Casing Removal
7.2	Install Reactor Closure Head
7.3	Remove Reactor Closure Head
7.6	Reactor Vessel Upper Internals Removal & Installation
7.7	Reactor Vessel Lower Internals Removal & Installation
7.28	Handling Reactor Head Studs & Nuts with Lifting Basket
7.29	RCP Hatch Cover Handling
7.30	RCP Internals Removal
7.31	RCP Motor Removal & Installation
7.33	RCP Flywheel Removal & Installation
7.34	Reactor Stud Tensioner Handling
17.1	Screen Wash Pump & Motor Removal
17.2	ASW Pump & Motor Removal
17.3	Circulating Water Pump, Motor, Etc. Removal
17.4	Circulating Water Discharge Valve Removal
17.5	Bar Racks Removal
17.6	Traveling Water Screens Removal
17.7	Circulating & ASW Screen Gate Removal
17.8	ASW Pumps Intake Bay Gate Removal
22.1	Generator Rotor Removal
22.2	Exciter Housing Removal
22.3	Exciter Removal
23.2	Containment Fan Cooler Motor Removal
50.1	Rigging Equipment Inspection
50.3	Overhd, Gantry, & Mobile Crane Insp Testing and Maint
50.5	Handling New Fuel in Shipping Containers
50.7	Hoisting & Storage of Head Handling Tool
50.8	Hoisting & Storage of Internals Handling Tool
50.9	Reactor Missile Shield Handling
50.10	Spent Fuel Shipping Cask Handling
50.11	Spent Filter Xfr Cask Handling & Hoisting

NRC Request (Enclosure 3)

2.1.3.c

"A tabulation of heavy loads to be handled by each crane which includes the load identification, load weight, its designated lifting device, and verification that the handling of such load is governed by a written procedure containing, as a minimum, the information identified in NUREG-0612, Section 5.1.1(2)."

PGandE Response

2.1.3.c

The following table identifies the heavy loads that are handled by each Category 1 overhead load handling system, along with load weights and lifting equipment used. The heavy loads carried by the four general purpose cranes are keyed to the load path drawings by alphabetic labels. Where the lifting equipment includes a special lifting device, and the device is not analyzed in Section 2.1.3.d under ANSI N14.6, a note is referenced to justify the exclusion. The notes are at the end of the table.

Procedures for the handling of heavy loads are discussed in section 2.1.3.b, including the titles of the general procedure and the specific procedures for each load. The last column in the table is a cross-reference to the applicable procedure.

TABLE 2.1.3.c-1
HEAVY LOADS, THEIR WEIGHTS AND THEIR LIFTING DEVICES

CRANE	LOAD	WEIGHT [tons]	LIFTING DEVICE	PROCEDURE
C-140-07 Containment Polar Crane (200T Gantry)	A. Reactor Head w/CRDM & lifting device	172.5	Special lifting device, pinned directly to main hook[1]	7.2, 7.3
	B. Upper internals w/lifting device	77.5	Special lifting device, pinned directly to main hook[1]	7.6
	C. Lower internals w/lifting device	142.5	Special lifting device, pinned directly to main hook[1]	7.7
	D. Missile shield	17	Slings	50.9
	E. Internals lifting device	7.5	Pinned directly to main hook[1]	50.8
	F. Reactor head lifting device	12.5	Pinned directly to main hook[1]	50.7
	G. Reactor coolant pump internals	3.8	Slings	7.30
	H. Reactor coolant pump motor	43.8	Special lifting device[2], pinned to hook	7.31
	I. Reactor coolant pump flywheel	6.4	Special lifting device[2], pinned to hook	7.33
	J. Reactor coolant pump hatch	1.5	4 slings	7.29
	K. Containment fan cooler motor	2	Slings	23.2
	L. Head studs in basket	5.4	4 slings	7.28
	M. Reactor vessel inspection tool	5.25	Special lifting device, pinned directly to main hook	by contractor
	Main hoist load block	7.3	-	-

TABLE 2.1.3.c-1
HEAVY LOADS, THEIR WEIGHTS AND THEIR LIFTING DEVICES

CRANE	LOAD	WEIGHT [tons]	LIFTING DEVICE	PROCEDURE
C-140-12 Head Stud Tensioner (2T Monorail)	Tensioner	1.3	Hooked directly to hoist	7.34
AF-140-08 Fuel Handling Area Crane (125T Bridge)	A. New fuel in shipping containers	3.2	4 slings	50.5
	B. Spent fuel shipping cask	67.5	Pinned to main hook	50.10
	Main hoist load block	2.5	-	-
AF-100-14 Motor Driven Aux. Feed Pump 2-2 (3T Monorail)	Pump	2.0	Slings	3.5
	Motor	2.3	Slings	3.5

TABLE 2.1.3.c-1
HEAVY LOADS, THEIR WEIGHTS AND THEIR LIFTING DEVICES

CRANE	LOAD	WEIGHT [tons]	LIFTING DEVICE	PROCEDURE
T-140-01 & -02 2-115T Turbine Bldg. Bridge Cranes	A. Generator rotor	192 (96 Per Crane)	Slings; hooks spaced 17' apart by cable loops	22.1
	B. Exciter	40	Special lifting device[2], with 4 slings	22.3
	C. Exciter housing	8.5	Slings	22.2
	D. LP turbine crossover tee	22	2 turnbuckles to main hook	4.6
	E. LP turbine rotor	100	Special lifting device[2], with adjustable slings, basket configuration	4.1
	F. HP turbine rotor	55	Same as LP rotor	4.1
	G. Condensate pump casing	13	Slings	2.1
	H. FW pump turbine cover	9	Slings to auxiliary hook	3.3
	I. LP turbine outer cover	70	2 slings in basket configuration	4.5
	J. LP turbine inner cover #1	28	Special lifting device[2] and slings	4.5
	K. LP turbine inner cover #2	57.5	Same as LP turbine outer cover	4.5
	L. HP turbine cover	85	Same as LP turbine outer cover	4.4
	M. HP throttle valves	6	2 slings	4.15
	N. Mobile crane	20	4 slings	50.2
	Turbine blade ring half	4.25 max.	Fixed sling and 2 chainfalls	4.2

TABLE 2.1.3.c-1
HEAVY LOADS, THEIR WEIGHTS AND THEIR LIFTING DEVICES

CRANE	LOAD	WEIGHT [tons]	LIFTING DEVICE	PROCEDURE
T-140-01 & -02 (Continued)	Turbine bearing cover	2 max.	2 slings, or special lifting device[2]	4.3
	FW pump hatch cover	3.4	4 slings	3.3
	FW pump turbine rotor	1.9	Slings	3.3
	Condensate pump motor	5.5	Slings	2.1
	Condensate pump hatch cover	1	2 slings	2.1
	HP turbine enclosure roof section	2.95	4 slings	4.14
	Turbine rotor lifting beam	5	2 slings	4.1
	Main hoist load block	3	-	-
T-119-13 Moisture Separator Reheater No. 2-2A (20T Monorail)	High pressure tube bundle	14.5	Slings	4.7
	Low pressure tube bundle	9.85	Slings	

Notes: [1]Load cells attached for monitoring loads.

[2]Not analyzed in Section 2.1.3.d, because no unacceptable consequences from lifting-device failure at any point on load path (see Table 2.4.2-1).

NRC Request (Enclosure 3)

2.1.3.d

"Verification that lifting devices identified in 2.1.3-c, above, comply with the requirements of ANSI N14.6-1978, or ANSI B30.9-1971 as appropriate. For lifting devices where these standards, as supplemented by NUREG-0612, Section 5.1.1(4) or 5.1.1(5), are not met, describe any proposed alternatives and demonstrate their equivalency in terms of load-handling reliability."

PGandE Response

2.1.3.d

The following lifting devices are shown to have an equivalent degree of safe load handling ability to that required by ANSI B30.9-1971 and ANSI N14.6-1978. The reasons for this statement are detailed below.

1. General Purpose Lifting Devices

Wire rope and synthetic webbing are the only types of general purpose slings used to handle heavy loads around safety-related equipment. Supplement 1 to Nuclear Plant Administrative Procedure C-702 will prohibit the use of alloy steel chain, metal mesh, natural and synthetic fiber rope, and general purpose slings around safety related equipment.

All general purpose wire rope and synthetic webbing slings comply with or exceed the provisions of both ANSI B30.9-1971 (slings) and CAL-OSHA's Title 8, General Industry Safety Orders parallel standard Article 101 (slings), with the exception of proof test validation on some slings, as discussed below.

Approximately half of the general purpose wire rope slings have been proof tested by the manufacturer in accordance with the optional provisions of Section 9-2.3 of ANSI B30.9-1971 (slings). A permanent metal identification tag will be securely affixed to each of these slings attesting to the proof test. This ID tag also includes the following information:

- Sling manufacturer
- Wire rope size and construction
- Rated Capacity: Vertical, choker and basket

The remainder of these general purpose slings which have no ID tags confirming a proof test were load tested to 200% of their safe working load in accordance with the provisions of ANSI Standard B30.9. The safe working load of each sling will be clearly stamped on one of the compression fittings, and a permanent stainless steel ID tag attached. These ID tags, as shown in Figure 2.1.3.d-1, will contain the following information:

- Wire rope size and construction
- Rated Capacity: Vertical, choker and basket
- Date of load test

Supplement 1 to Nuclear Plant Administrative Procedure C-702 will require that all general purpose slings be inspected annually and prior to use. Slings not meeting the above requirements shall be destroyed.

Dynamic loading of slings is limited by design speed limitations of the heavy load carrying cranes, and is further limited by restricting the hoist speed to 20 feet per minute (fpm) in Administrative Procedure C-702. This loading

is conservatively accounted for by derating the slings by ½% per fpm of hoisting speed; further conservatism is introduced by setting the hoist speed for derating to the administrative maximum of 20 fpm, regardless of the lower maximum speeds of most of the hoists. Thus, the load rating marked on the sling ID tags will be 10% less than the rating allowed by ANSI B30.9-1971.

2. Special Lifting Devices

The term "special lifting device" is defined broadly, for this submittal, as anything used for rigging a heavy load that is not generically available commercially, but rather is designed and fabricated for one or more particular loads.

There are three special lifting devices that must conform with ANSI N14.6-1978:

- Reactor Vessel Head Lifting Device
- Reactor Internals Lifting Device
- Reactor Vessel Inspection Tool (RVIT) Lifting Device

All three have been shown to satisfy the intent of all applicable ANSI N14.6-1978 requirements.

The reactor vessel head lifting device, shown in Figure 2.1.3.d-2, consists of a welded and bolted structural steel frame, with suitable rigging for lifting and storing the head during refueling operations. It is evaluated in detail against ANSI N14.6 in Appendix A.

The reactor internals lifting device, shown in Figure 2.1.3.d-3, is another structural steel frame suspended from the Containment Polar Crane. When used to remove the upper internals, it is lowered onto the guide tube support plate and manually bolted to the plate with three bolts. The lower internals are removed and installed in a similar fashion, with three bolts into the support flange. Bushings on the lifting device frame engage guide studs in the vessel flange to provide lateral guidance during removal and replacement of the internals packages. The device's adequacy while lifting the upper internals is evaluated in detail against ANSI N14.6 in Appendix A. The lifting device is not evaluated for the lower internals lift, since there is no fuel in the reactor during this lift.

PGandE plans to contract out the reactor vessel inspection to specialized contractors, and to require the contractor's RVIT lifting device to comply with all applicable portions of ANSI N14.6. PGandE's present reactor vessel inspection contractor is Westinghouse Nuclear Services Division (WNSD). The Westinghouse RVIT and its lifting device are shown in Figure 2.1.3.d-4. The lifting device consists of a double tripod of structural steel with a central hook. Once the hook engages the eye at the top center of the RVIT, the feet of the lower tripod are forced down onto three steadying pads by the hydraulically-actuated upper tripod, forming a rigid unit. WNSD has qualified this lifting device under

ANSI N14.6. The calculations are filed at the WNSD offices in Pittsburgh, PA, in file 95041-9, with reference number PDC-TSST-C-80-157. They are available on request.

It is seen in Table 2.1.3.c-1 that the remaining special lifting devices are not important to safety. Either they do not carry loads over safe-shutdown components or spent fuel, or it is shown in Section 2.4 of this submittal that no load drop caused by their failure could adversely affect safe-shutdown capability or the integrity of exposed fuel. These lifting devices are thus excluded from the ANSI N14.6 evaluation.

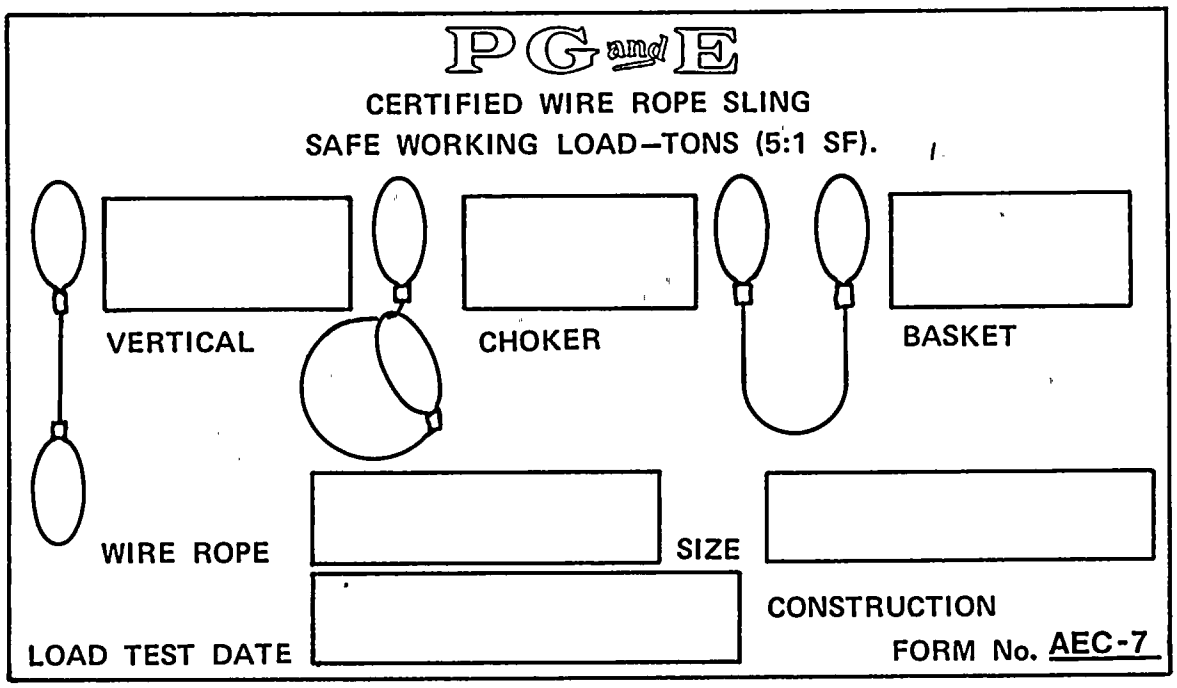

UNIT 2
DIABLO CANYON SITE

FIGURE 2.1.3.d-1
SLING IDENTIFICATION TAG

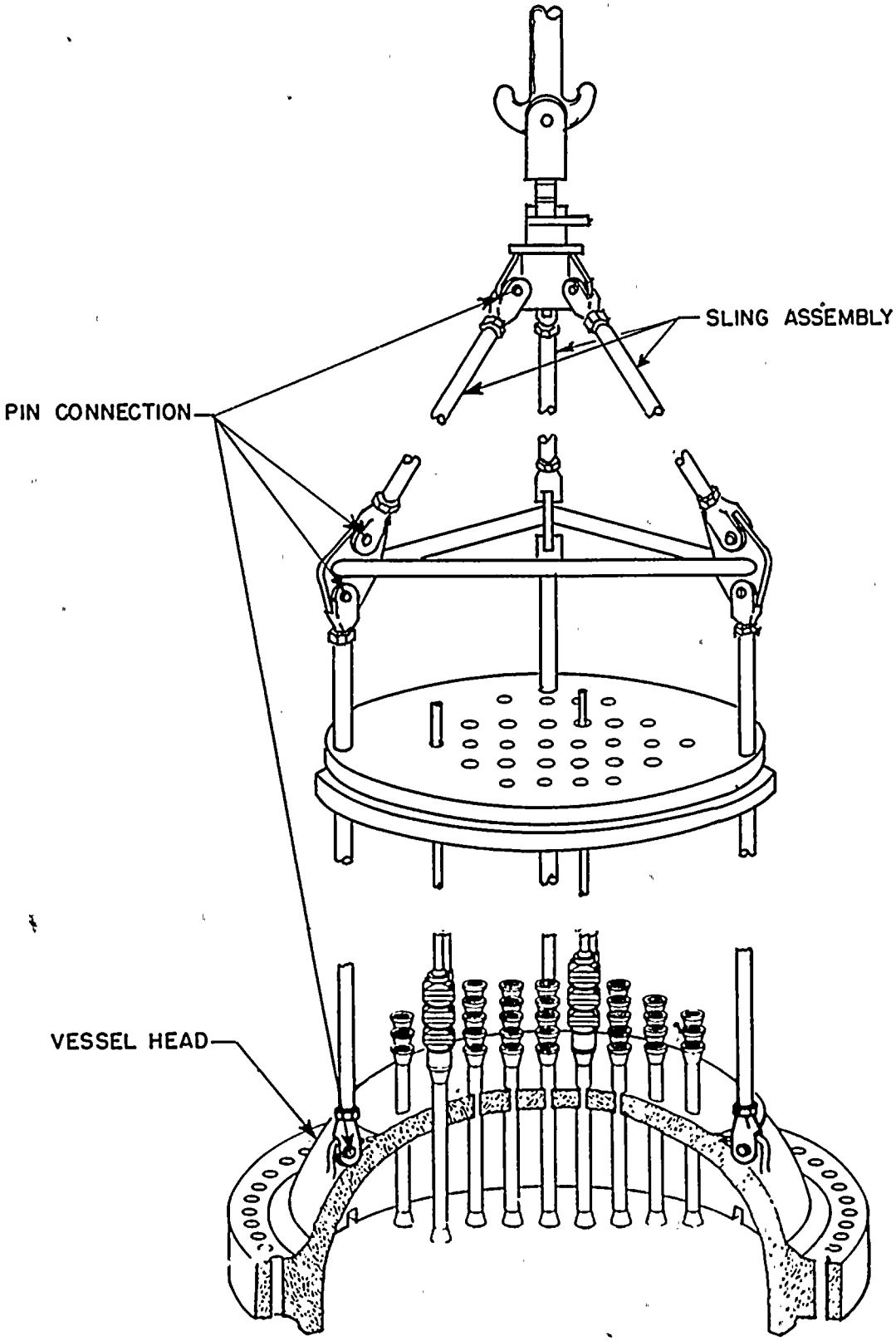

UNIT 2
DIABLO CANYON SITE

FIGURE 2.1.3.d-2
REACTOR VESSEL HEAD
LIFTING DEVICE

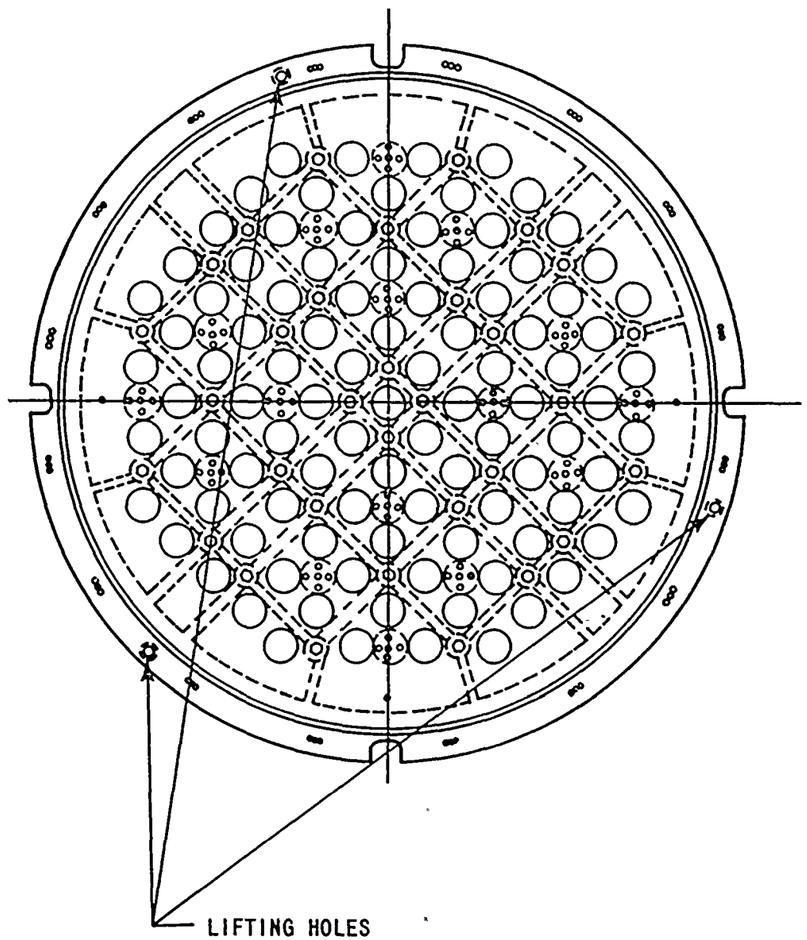

PLAN VIEW OF UPPER CORE SUPPORT STRUCTURE

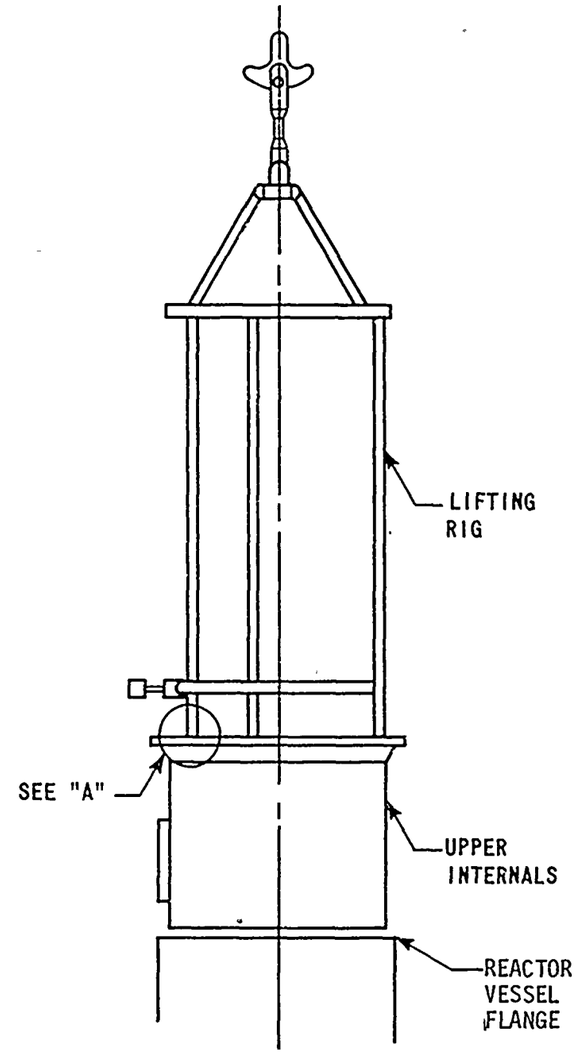

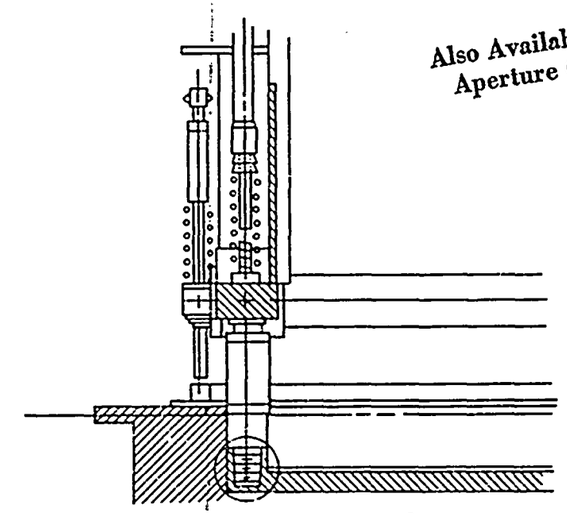

UNIT 2
DIABLO CANYON SITE

FIGURE 2.1.3.d-3
REACTOR INTERNALS
LIFTING DEVICE

NRC Request (Enclosure 3)

2.1.3.e

"Verification that ANSI B30.2-1976, Chapter 2-2, has been invoked with respect to crane inspection, testing, and maintenance. Where any exception is taken to this standard, sufficient information should be provided to demonstrate the equivalency of proposed alternatives."

PGandE Response

2.1.3.e

Crane inspection, testing, and maintenance comply with ANSI B30.2-1976, as supplemented by CAL-OSHA requirements. Details of their compliance are given in the following paragraphs. All records involving the inspection, testing, and maintenance of cranes are available for review at the plant site.

1. General Purpose CAL-OSHA Certified Cranes

The inspections, proof load testing and maintenance of the major cranes, are governed by two safety codes. The first titled "General Industry Safety Orders," articles 92 (Cranes), 99 (Testing), 100 (Inspection and Maintenance) is published by the Department of Industrial Safety of the California State Occupational Safety and Health Administration (CAL-OSHA). The second governing code is ANSI B30.2-1976, "Overhead and Gantry Cranes." The current annual inspection and quadrennial proof load test dates are shown in the table below.

I.D. No.	Location	Proof Test Date	Latest Annual Inspection Date
C-140-07	Containment	1-28-75	9-10-82
AF-140-08	Fuel Handling Area	10-28-80	9-28-82
T-140-01	Turbine Building	2-25-83	2-25-83
T-140-02	Turbine Building	2-25-83	2-25-83

Each crane was inspected and proof load tested prior to acceptance and being placed into initial service. Annually, prior to the proof load test anniversary, each crane is inspected and a certificate issued to authorize continuing use of the crane. Every four years after the initial proof load test, each crane is again proof load tested at 125% of its rated capacity and a certificate issued. CAL-OSHA substituted an alternate inspection and proof test procedure for the containment structure polar cranes, because they are not accessible for inspection during power operation. This procedure is in accordance with Section 5.1.1(6) (Page 5-3) of NUREG-0612. During shutdown, these cranes will be thoroughly inspected and operationally tested prior to use. A load cell is used to monitor lifting forces to ensure a clean lift of the reactor head, upper internals and lower internals.

PGandE owns and operates 65 hydroelectric power plants, 17 geothermal power plants and 7 multi-unit fossil-fueled power plants. Recognizing the need for an internal authority to certify its many cranes, an independent section was established within PGandE whose primary responsibility is to administer a comprehensive ongoing crane certifying program. CAL-OSHA has registered PGandE as an approved certificating agency and authorized the establishment of a crane certifying program. This program is directed by a registered professional engineer.

2. Small single purpose monorail and hoist. The following monorail and hoist serve only the equipment with which they are associated.

System	Equipment Served	Hoist	Proof Test Date
C-140-12 (monorail)	Head Stud Tensioners	Electric	by 8-1-83
C-140-14 (fixed hoist)	Missile Shield	Electric	(not installed yet)

They have been or will be inspected and load tested in accordance with ANSI B30.2-1976. They are best classified for "special or infrequent service" as defined in ANSI B30.2-1976. They will be inspected prior to each use to conform with the ANSI recommended inspection schedule and provisions of NUREG-0612, Section 5.1.1(6). Preventive and scheduled maintenance will be performed as required. Permanent records of inspection and maintenance will be kept at the plant.

3. Overhead crane support structures. The remaining cranes contained in Table 2.1.3.c-1 are single purpose monorails consisting of a support structure but no permanently installed hoist. Portable hoists and chainfalls from the rigging loft are used in conjunction with these monorails. These monorails serve a single purpose and are used in the same way as those monorails in Section 2 above. Therefore, they also will be inspected prior to usage.

The monorail structure consists of an I-Beam securely fastened to the building with a multi-wheeled trolley running on the lower flange of the beam. The portable hoist is suspended from the trolley. Permanent written records will not be maintained on monorail structures.

The following equipment is permanently stored in the rigging loft at the present time.

Chainfalls	Comealongs
2 - 10 ton	2 - 3 ton
2 - 6 ton	6 - 1½ ton
6 - 5 ton	2 - 1 ton
1 - 4 ton	
2 - 3 ton	
8 - 2 ton	
6 - 1½ ton	
6 - 1 ton	

Chainfalls and comealongs that are used with Category 1 handling systems are inspected prior to use and annually. Permanent inspection and maintenance records are kept at the plant for each chainfall and comealong that is used with Category 1 handling systems.

NRC Request (Enclosure 3)

2.1.3.f

"Verification that crane design complies with the guidelines of CMAA Specification 70 and Chapter 2-1 of ANSI B30.2-1976, including the demonstration of equivalency of actual design requirements for instances where specific compliance with these standards is not provided."

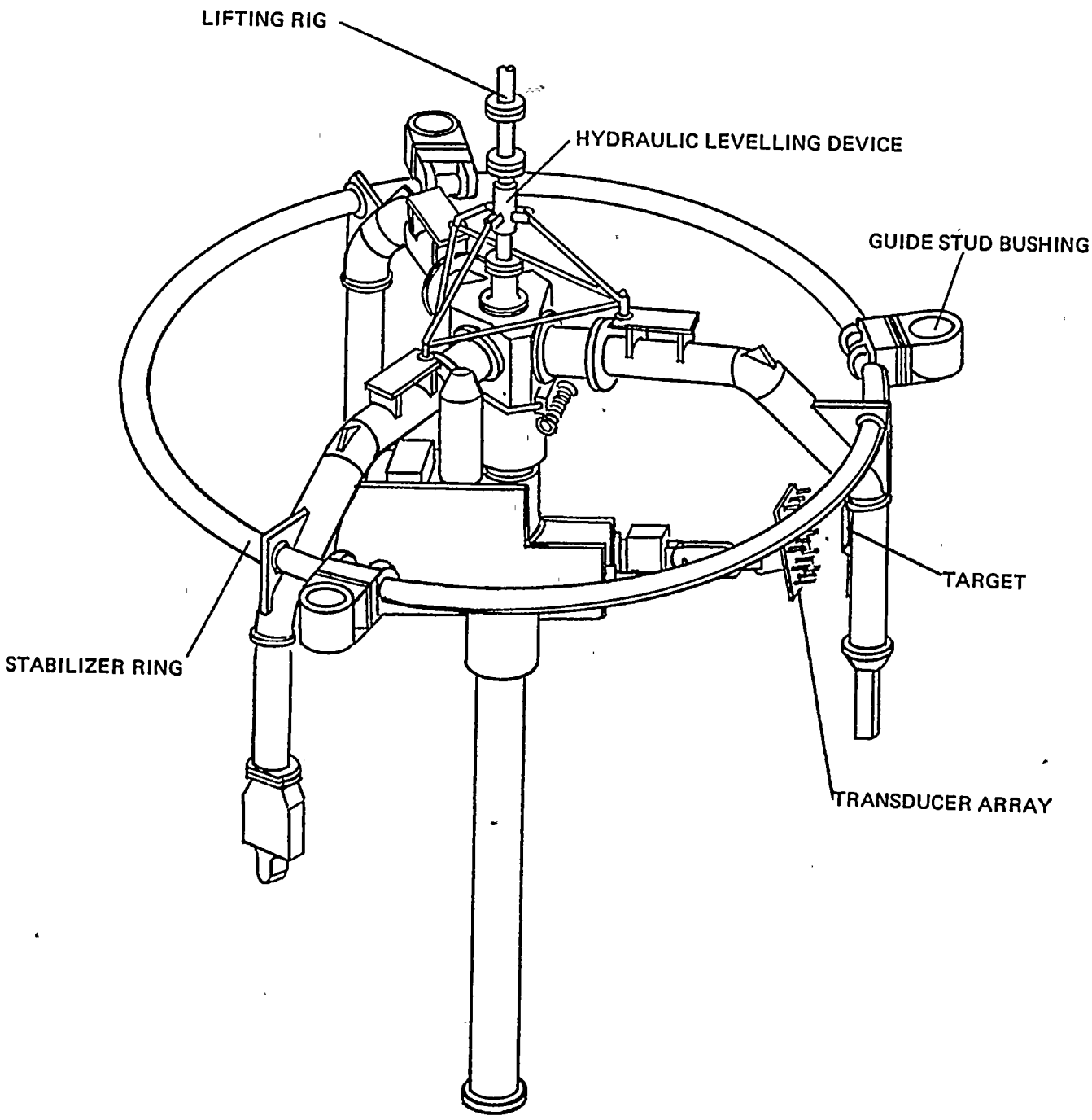

UNIT 2
DIABLO CANYON SITE

FIGURE 2.1.3.d-4
REACTOR VESSEL INSPECTION TOOL
AND ITS LIFTING DEVICE

PGandE Response

2.1.3.f

All of the major cranes at Diablo Canyon were designed and constructed before CMAA Specification 70 and Chapter 2-1 of ANSI B30.2-1976 were published. However, each of the major cranes listed below, by virtue of the codes used for fabrication, and subsequent analysis for earthquake qualification, has been shown to possess an equivalent degree of safety in design.

Most of the Category 1 monorails were likewise installed before the publication of CMAA 70 and ANSI B30.2-1976. In addition, the standards were specifically written for overhead bridge and gantry cranes, so their specific provisions are essentially inapplicable to monorail design. The monorails were evaluated against industry standards that are equivalent to CMAA 70 and ANSI B30.2 in scope but applicable to monorails. All four monorails satisfy these standard requirements, after minor design modifications to one of them.

General Purpose Cranes

There are four cranes in Diablo Canyon Unit 2 that are overhead bridge or gantry cranes, and thus can be analyzed against CMAA 70 and ANSI B30.2. They are:

1. C-140-07: 200T Containment Polar Gantry Crane
2. AF-140-08: 125T Fuel Handling Area Crane
3. T-140-01: 115T Turbine Building Bridge Crane
4. T-140-02: 115T Turbine Building Bridge Crane

All of these cranes were constructed using the same codes for design and fabrication.

Structural design is in accordance with the "Specification for Electrical Overhead Traveling Cranes for Steel Mill Service," Association of Iron and Steel Engineers Standard No. 6 (tentative) dated May 1, 1969, which is recognized by CMAA Specification No. 70 as the appropriate code for class F cranes. (Class F has the most stringent duty requirements.) All structural members not covered by the standard are designed and fabricated in accordance with the "Specification for the Design, Fabrication and Erection of Structural Steel for Buildings" by the American Institute of Steel Construction (AISC), dated April 17, 1963, except that stresses do not exceed 90 percent of the allowable values stated in the AISC Specification.

Structural joints using high strength bolts are in accordance with AISC "Specifications for Structural Joints Using ASTM A325 Bolts", dated March 1962. Welding is in accordance with the American Welding Society "Specification for Welded Highway and Railway Bridges", AWS D2.0-66.

The electrical installation and all electrical equipment are in accordance with the National Electrical Code Article 610, dated 1968, California Administrative Code Title 24, Part 3 and the applicable standards of the National Electrical Manufacturers Association.

Design, fabrication, and erection of the crane rails and crane support structures are in accordance with the AISC code.

The material, structural, mechanical and electrical provisions of CMAA 70 and Chapter 2-1 of ANSI B30.2-1976 are specifically met by the codes used for fabricating the Diablo Canyon cranes or by their as-built conditions, with the following exceptions in the structural and mechanical areas.

Structural Exceptions:

1. Paragraph 3.2 of CMAA 70 requires conformance with AWS D.14.1, "Specification for Welding Industrial and Mill Cranes."

   The Diablo Canyon cranes were built to AWS D2.0, "Specification for Welded Highway and Railway Bridges". These two codes are similar in that all of the applicable requirements in AWS D14.1 are met or exceeded by the requirements in AWS D2.0.

2. For the design loading of the cranes Paragraph 3.3.2.1.1.3 of CMAA 70 requires an impact load equal to the greater of 15% of the load or ½% per foot per minute of hoisting speed. The cranes were designed to AISE Standard No. 6, which requires a minimum impact loading of 30% of the load. This criterion, combined with the hoist speed restriction in Administrative Procedure C-702 of 20 fpm or less for all heavy load lifts, results in a greater total design load (static and impact) than the CMAA 70 criterion. The hoist speed limit alone results in an impact load adder of:

   $$(\tfrac{1}{2})\%/\text{fpm} \times 20\text{fpm} = 10\%$$

   Since 10% is less than 15%, CMAA 70 requires the greater 15% impact load for the Turbine Building cranes, but the cranes were designed to the even more conservative 30%.

3. The CMAA 70 values for nominal allowable stresses in box girders vary slightly from those specified in the AISE Standard No. 6. In most cases the configuration of the girders is such that they require the use of the slightly lower allowable stresses specified in CMAA 70. In all cases, however, the actual stresses indicate that adequate margins of safety are maintained.

   It should be noted that all the cranes have been tested successfully at 125% of their rated capacities and, in particular, that the containment structure polar crane has a maximum lift of only 83% of its rated capacity. Inspection and maintenance procedures for the cranes provide assurance that no latent deficiencies are present up to the maximum

anticipated stress levels to which the cranes will be subjected. In addition, all lifts are subject to detailed handling requirements which, consequently, minimizes the possibility of overloading any of the crane components.

Thus, the fact that some allowable stresses of CMAA 70 are slightly lower than those of AISE Standard No. 6 is judged to have no significant effect on the current load handling reliability of the cranes.

4. Paragraph 3.4.3 of CMAA 70 lists the following allowable vertical stresses in the end trucks of the bridge, not including impact loading:

Tension = 14.4 ksi
Compression = 14.4 ksi
Shear = 10.8 ksi

The AISE Standard No. 6 as specified for Diablo Canyon, on the other hand, makes no special provisions for any stresses in the end trucks, other than basic stress allowances for structural steel. For A36 steel including impact loading, they are:

Tension = 20 ksi
Compression = 20 ksi
(For members with full lateral support)
Shear = 12 ksi

The impact loading as listed in the AISE Standard No. 6 is 30% of the static load. Therefore, when the AISE allowable stresses are divided by 1.3 to compare the two code values, the following results are obtained:

	CMAA 70	AISE 6 ÷ 1.30
Tension	14.4 ksi	15.4 ksi
Compression	14.4 ksi	15.4 ksi
Shear	10.8 ksi	9.2 ksi

It is evident that the two codes are close in their requirements for structural design of end trucks when impact loading is considered.

Mechanical Exceptions:

1. Paragraph 4.11.1 of CMAA 70 requires crane drive wheel diameters to match within .01". The bridge drive wheels of the Turbine Building Bridge Cranes (T-140-01, -02) are specified to match only to ± .015". The Fuel Handling Area Bridge Crane drive wheels cannot be measured bacause of construction scaffolding.

The purpose of this wheel-diameter tolerance specification is to protect against wheel binding on the tracks. This concern is moot, since all three of these cranes have been used extensively over the 11 years of plant construction (probably more than they will be used during the plant's operating life) and no wheel binding has occurred. Thus the design has been proven by experience.

Monorails

The monorail design review started with a search for applicable industry standards, since CMAA 70-1976 and Chapter 2-1 of ANSI B30.2-1976 were inapplicable to monorails. The standards were selected on the basis of equivalency to CMAA 70 and ANSI B30.2 in scope, and wide use in the industry during the time the Diablo Canyon monorails were designed, purchased, and installed.

The structural evaluation of the tracks and track supports was based on ANSI B30.11-1973, "Monorails and Underhung Cranes", which is equivalent to ANSI B30.2-1976, and in fact grew out of the same standard (ASA B30.2-1943). ANSI B30.11 in turn refers to The American Institute of Steel Construction's The Manual of Steel Construction, 7th edition (AISC Manual). Welding procedures and welder qualification are governed by reference to the American Welding Society's "Specification for Welding Industrial and Mill Cranes" (D14.1-1970).

The mechanical requirements of the hoists are treated in another standard in ANSI B30.2-1976's family: "Overhead Hoists" (ANSI B30.16-1973). Other requirements are set forth in Section 1.7 (Guards) and 1.8 (Brakes) of ANSI B30.11-1973, "Monorails and Underhung Cranes".

The electrical requirements of the three Category 1 monorails with electric hoists are also specified by ANSI B30.16-1973, by reference to the National Electric Code (ANSI C1-1971). CMAA 70 and ANSI B30.2-1976 reference the same standard.

All of the monorails and hoists satisfy the technical requirements of the standards listed above, with the following structural exception:

One monorail (AF-100-14) will require design modifications to satisfy AISC allowable stress requirements. These changes have been identified, and will be made within the time specified in Enclosure 3. The consequences of a heavy load drop resulting from the failure of this monorail has been evaluated; they are reported in Table 2.4.2-1. The evaluation has shown that this load drop would not result in loss of safe shutdown or decay heat removal capability. Therefore, the continued use of this monorail in the interim does not constitute a hazard.

NRC Request (Enclosure 3)

2.1.3.g

"Exceptions, if any, taken to ANSI B30.2-1976 with respect to operator training, qualification, and conduct."

PGandE Response

2.1.3.g

Training courses, operator certification, and procedures to control operator conduct all meet the requirements of ANSI B30.2-1976 without exception.

A training course for qualifying crane operators, "Maintenance Training Course M-21", has been developed in accordance with Nuclear Plant Administrative Procedure B-750. Training programs covering both mechanical and electrical maintenance activities are also being developed.

The qualification of each operator is supervised by training engineers in the Maintenance Department, who ensure compliance to ANSI B30.2-1976 by formal documented training.

Administrative Procedure C-702, "Handling of Large Equipment", currently regulates the conduct of crane operators. A new general plant rigging procedure is now being developed, that will provide a thorough guide to all plant rigging operations. Both B-750 and C-702 are available for inspection at the plant site, as will the new rigging procedure when it is finished.

NRC Request (Enclosure 3)

2.2 SPECIFIC REQUIREMENTS FOR OVERHEAD HANDLING SYSTEMS OPERATING IN THE VICINITY OF FUEL STORAGE POOLS

"NUREG 0612, Section 5.1.2, provides guidelines concerning the design and operation of load-handling systems in the vicinity of stored, spent fuel. Information provided in response to this section should demonstrate that adequate measures have been taken to ensure that in this area, either the likelihood of a load drop which might damage spent fuel is extremely small, or that the estimated consequences of such a drop will not exceed the limits set by the evaluation criteria of NUREG 0612, Section 5.1, Criteria I through III."

PGandE Response

2.2

Only two heavy loads are carried in the vicinity of the spent fuel pool - the fuel handling area bridge crane load block (2.5 tons) and a spent fuel shipping cask (assumed 67.5 tons). Section 2.2.3 shows that the load block is adequately protected against dropping, by redundant limit switches to eliminate two-blocking, and by extremely high design safety factors. Administrative procedures further protect the spent fuel by restricting movement of the load block over the spent fuel pool. Section 2.2.4 shows that the spent fuel cask is protected against falling onto "hot" spent fuel by redundant bridge and trolley travel limit switches that keep the cask well away from this fuel, and thus the consequences of a cask drop will not violate NUREG-0612 criteria.

NRC Request (Enclosure 3)

2.2.1

"Identify by name, type, capacity, and equipment designator, any cranes physically capable (i.e., ignoring interlocks, moveable mechanical stops, or operating procedures) of carrying loads which could, if dropped, land or fall into the spent fuel pool."

PGandE Response

2.2.1

There are two cranes physically capable of carrying loads over the Spent Fuel Pool (SFP). They are:

1. The fuel handling area bridge crane (AF-140-08). This is a 125-ton capacity crane for general use.

2. The spent fuel bridge crane (AF-140-16). This is a one-ton capacity special-purpose bridge crane, used only for maneuvering fuel assemblies.

NRC Request (Enclosure 3)

2.2.2

"Justify the exclusion of any cranes in this area from the above category by verifying that they are incapable of carrying heavy loads or are permanently prevented from movement of the hook centerline closer than 15 feet to the pool boundary, or by providing a suitable analysis demonstrating that for any failure mode, no heavy load can fall into the fuel-storage pool."

PGandE Response

2.2.2

The spent fuel bridge crane (AF-140-16) is excluded from the above category because it can be used only for moving fuel assemblies. Since its largest load is a spent fuel assembly (weighing 1,813 pounds, including its handling tool), and since a "heavy load" is defined in NUREG-0612 as weighing more than a spent fuel assembly and its handling tool, this crane is incapable of carrying a heavy load over the spent fuel pool.

NRC Request (Enclosure 3)

2.2.3

"Identify any cranes listed in 2.2.1, above, which you have evaluated as having sufficient design features to make the likelihood of a load drop extremely small for all loads to be carried and the basis for this evaluation (i.e., complete compliance with NUREG 0612, Section 5.1.6 or partial compliance supplemented by suitable alternative or additional design features). For each crane so evaluated, provide the load-handling-system (i.e., crane-load-combination) information specified in Attachment 1."

PGandE Response

2.2.3

The only crane listed in Section 2.2.1 which is not excluded in Section 2.2.2 is the fuel handling area bridge crane (AF-140-08). This crane carries two heavy loads in the Spent Fuel Pool area: the spent fuel cask (assumed 67.5 tons), and the unloaded load block (2.5 tons).

This crane has been upgraded to meet the reliability criteria of Section 5.1.6 and Appendix C of NUREG-0612, for the load block load.

The reliability analysis in Appendix B of NUREG-0612 shows four possible causes for a load drop:

- rigging failure,
- crane component failure,
- load hangup, and
- two-blocking.

The AF-140-08/load block load system is protected against all four, to a high degree of reliability.

- Rigging failure -- The load block is attached to the hoist by wire rope reeving whose tensile strength was specified as at least six times the design load. Thus the safety factor of the "rigging" is 6 * 125 tons / 2.5 tons = 300.

- Crane component failure -- The crane's structural components were designed with the normal industrial stress safety factor of 5, based on the design load. But the load block weighs only 2% of the design load, so the safety factor is raised to 250 when the crane is carrying only the load block. Electrical failures would result in setting the emergency brakes.

- Load hangup - Hangups occur when some protrusion of a load is caught under a stationary object, or when a protruding stationary object catches on the hook of the load block or sticks into the space over it. Aside from the improbability of such an accident, there are no protruding objects in the Spent Fuel Pool area within the limits of motion for the load block.

- Two-blocking -- This is the major generic cause of load block drops. Accordingly, the design of the dual travel-limit switches on the Fuel Handling Area Bridge Crane main hoist has been modified to comply with the provisions of NUREG-0554, Section 4.5. The modifications will be installed within the time specified in NUREG-0612, and tested by the alternate method described in Paragraph 8 of NUREG-0612, Appendix C.

NRC Request (Enclosure 3)

2.2.4

"For cranes identified in 2.2.1, above, not categorized according to 2.2.3, demonstrate that the criteria of NUREG 0612, Section 5.1, are satisfied. Compliance with Criterion IV will be demonstrated in response to Section 2.4 of this request. With respect to Criteria I through III, provide a discussion of your evaluation of crane operation in the spent fuel area and your determination of compliance. This response should include the following information for each crane:

a. Which alternatives (e.g., 2, 3, or 4) from those identified in NUREG 0612, Section 5.1.2, have been selected.

b. If Alternative 2 or 3 is selected, discuss the crane motion limitation imposed by electrical interlocks or mechanical stops and indicate the circumstances, if any, under which these protective devices may be bypassed or removed. Discuss any administrative procedures invoked to ensure proper authorization of bypass or removal, and provide any related or proposed technical specification (operational and surveillance) provided to ensure the operability of such electrical interlocks or mechanical stops.

c. Where reliance is placed on crane operational limitations with respect to the time of the storage of certain quantities of spent fuel at specific post-irradiation decay times, provide present and/or proposed technical specifications and discuss administrative or physical controls provided to ensure that these assumptions remain valid.

d. Where reliance is placed on the physical location of specific fuel modules at certain post-irradiation decay times, provide present and/or proposed technical specifications and discuss administrative or physical controls provided to ensure that these assumptions remain valid.

e. Analyses performed to demonstrate compliance with Criteria I through III should conform to the guidelines of NUREG 0612, Appendix A. Justify any exception taken to these guidelines, and provide the specific information requested in Attachment 2, 3, or 4, as appropriate, for each analysis performed."

PGandE Response

2.2.4

The only remaining crane-load combination is the fuel handling area bridge crane, AF-140-08, carrying the spent fuel cask into and out of the cask-loading area of the spent fuel pool. The hazard of a cask load drop onto fuel in the spent fuel pool is mitigated by isolating the cask from "hot" spent fuel (alternative 3), as described below.

Definitions and Assumptions

PGandE does not expect to ship any spent fuel offsite for a long time, and therefore has not decided on a design for the spent fuel cask. A generic cask design is assumed for this analysis, the same in the Diablo Canyon FSAR. The cask and its design assumptions are shown in Figure 2.2.4-1.

"Hot" spent fuel is defined as spent fuel that is less than 1,000 hours subcritical, or whose reactivity in cold, 2000-ppm borated water can be made greater than 0.95 for any fuel/water ratio. The calculations presented below will show the adequacy of the first criterion for minimizing radioactive releases from a postulated cask drop, and will relate the second criterion to specific minimum-burnup levels for fuel of various initial enrichments.

Cask Exclusion

As described in Figure 9.1-3 of FSAR Amendment 28, electrical interlocks on the fuel handling area bridge crane trolley and bridge prevent motion of the crane hook over the spent fuel pool. These partitions are not heavy loads, since they are not lifted by the crane. This exclusion area will be enlarged by moving the interlock switches. The new exclusion area is shown in Figure 2.2.4-2. The design change is already approved, and the physical modification will be completed within the time specified by NUREG-0612.

The interlocks will occasionally have to be bypassed, for pulling the movable partition walls across the spent fuel pool. These partitions are not heavy loads, since they are not lifted by the crane. On these occasions, the only "load" allowed is the load block, which is protected from falling by the measures described in Section 2.2.3. In addition, Maintenance Procedure 50.4, "FHB 125-ton Crane Operation", requires the trolley to be at the eastern end of the bridge before the interlock can be bypassed. This keeps the load block 7'1" east of the pool edge. The same maintenance procedure requires the written approval of the Shift Maintenance Supervisor before the interlocks can be bypassed.

In addition to restricting the movement of the spent fuel cask to the northwest corner of the spent fuel pool, further restrictions have been placed on the times when the spent fuel cask can be moved near the pool. Diablo Canyon Technical Specification 3.9.13 forbids moving the cask near the pool unless there is no spent fuel anywhere in storage racks 5 or 6 that is less than 1,000 hours subcritical. Maintenance Procedure 50.4 implements this restriction, and further requires that no fuel with a crushed-rack reactivity greater than 0.95 be present in racks 5 or 6 as a prerequisite to moving the cask into

the cask-loading area. The reactivity criterion is expressed as a function of initial enrichment and burnup achieved - first-cycle-discharge fuel (initial enrichment = 2.15 w/o U-235) must be exposed to 10.25 MWd/kg, and other fuel (initial enrichment up to 3.5 w/o U-235) must be exposed to 28 MWd/kg.

The alternative 3 separation requirement of 25 feet is based on preventing the cask from dropping, or dropping and tipping, onto any "hot" spent fuel. The distance between the dropped cask and the nearest "hot" spent fuel is minimized when the cask drops onto the pool edge and topples over toward cell 13Q. Tipping after a straight drop into the cask-loading area is prevented by a stainless-steel restraint around the area, and recent analyses have shown that the "tip-drop" accident postulated in the FSAR is less damaging than the above "drop-tip" accident. Based on the generic cask design described in Table 2.2.4-1, the minimum distance between the dropped cask and the nearest "hot" spent fuel is 5'8". Thus the intent of the alternative 3 separation distance is achieved. This analysis will be amended if the dimensions of the actual spent fuel cask used at Diablo Canyon turn out to be greater than those assumed here.

Cask Drop Accident

Damage to SFP walls and floor: As stated in the FSAR, the walls and floor of the spent fuel pool are 6 feet and 5 feet thick, respectively. The floor is poured directly on bedrock. Damage from a cask impact (which was assumed in the FSAR to fall from 4'2" above the 140' elevation, rather than 6" as specified in Procedure 50.4) would be limited to minor local crushing of the concrete and possible rupturing of the liner. Any resulting leakage through the liner would be detected at the spent fuel pool sump and terminated by valve closure of the leak detection line.

Damage to spent fuel racks or spent fuel: As many as thirteen spent fuel assemblies could be hit by a dropped and tipped spent fuel cask. (The FSAR had reported twenty.) It is assumed that the spent fuel racks fail completely and that every rod in the thirteen assemblies is rearranged to its most reactive configuration. The limited damage to the walls and floor described above allows credit to be taken for the 2000 ppm boron concentration in the spent fuel pool water.

The effect of this damage on site-boundary radiological consequences were reported in the FSAR, based on twenty failed assemblies, and Reg. Guide 1.25 assumptions and numerical values. The results were a thyroid dose of 19 rem and a whole body dose of 1.8 rem. Ratioing these results down by 13/20 reduces the doses to 12.4 and 1.2 rem, respectively. These are well below the 10CFR100 limits of 300 rem thyroid and 25 rem whole body.

The reactivity effect of this damage is limited by the administrative restrictions on the location of low-burnup fuel, away from racks 5 and 6. The burnup levels required for a crushed-rack reactivity less than 0.95 were calculated for Diablo Canyon fuel of two initial enrichments - 2.1 w/o U-235 for the Region 1 fuel that is removed at the first refueling outage, and 3.5 w/o U-235, the maximum allowed in the new fuel storage racks. For each of these initial enrichments, and for a series of burnup steps, the reactivity of an infinite array of crushed (i.e., fuel/water ratio optimized) fuel rods in

cold, 2000-ppm borated water was calculated. The code used was CASMO-2, maintained on the UCC computer system by Studsvik of America, and extensively benchmarked against critical experiments. The minimum safe burnup level was the burnup at which the 95/95 upper tolerance limit of crushed-rack reactivity went below 0.95. The limits were determined from benchmarks against critical experiments. The calculations are detailed in Appendix B, which follows the format of Attachment 3 to Enclosure 3. No exceptions are taken to the guidelines of NUREG-0612, Appendix A.

Damage to safety related components beneath the cask path: This is discussed in Section 2.4.4.

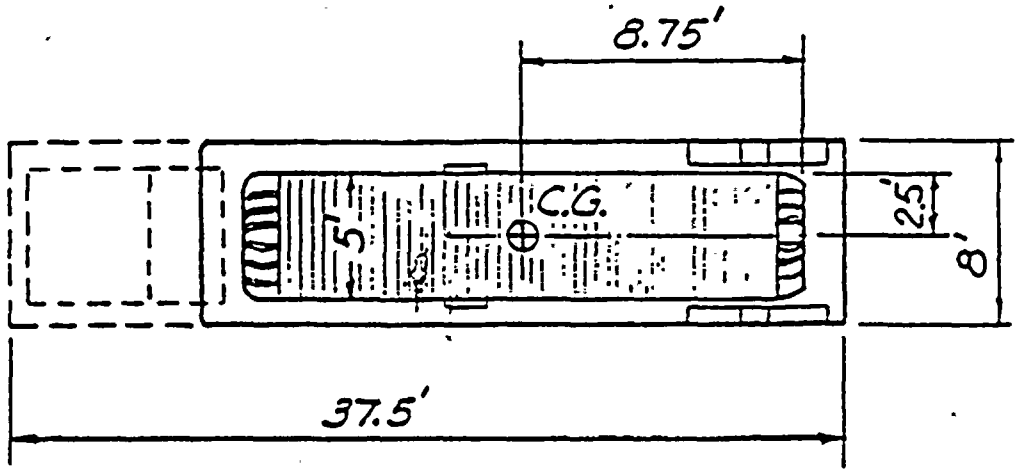

PLAN

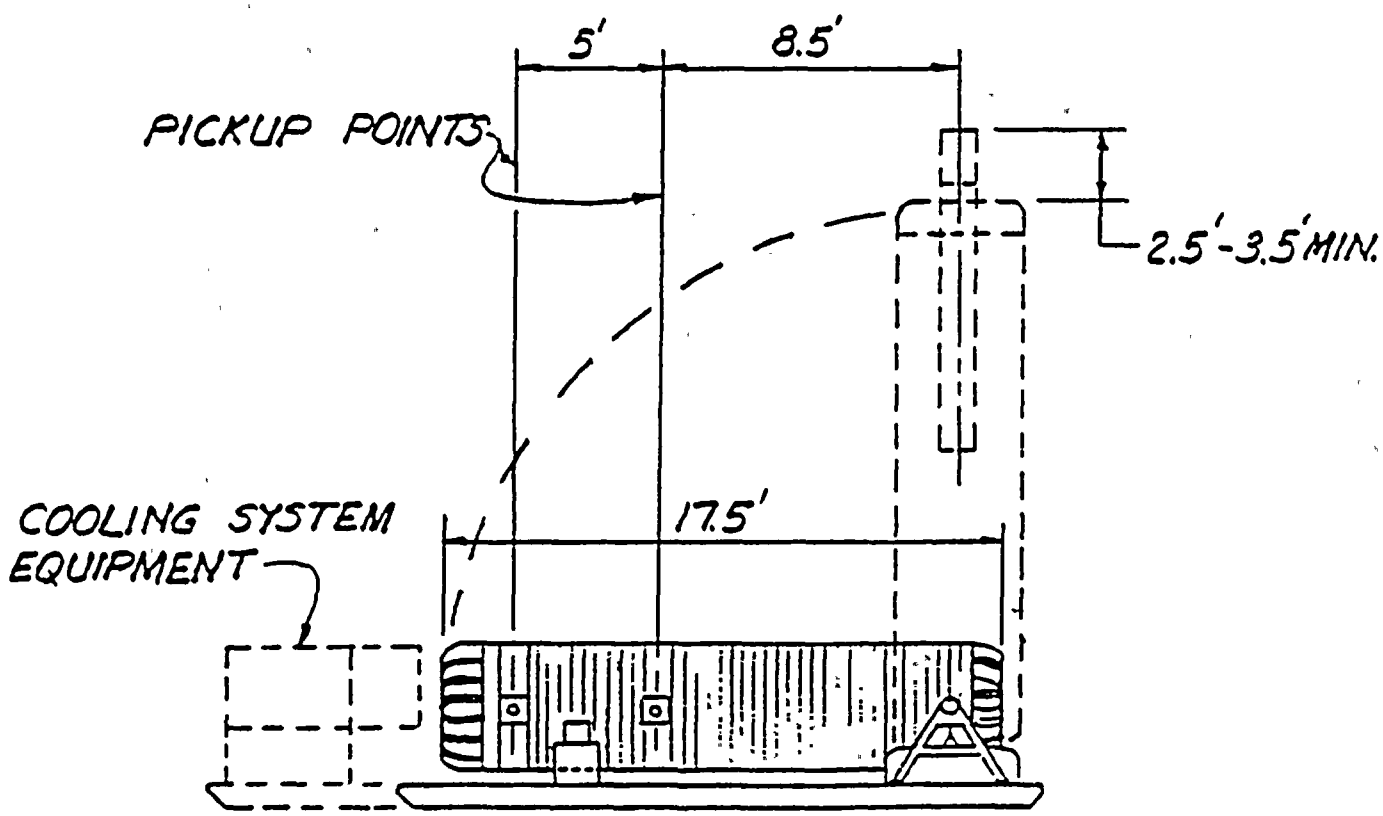

ELEVATION

TYPICAL SPENT FUEL CASK

WEIGHT 135 KIPS

UNIT 2
DIABLO CANYON SITE

FIGURE 2.2.4-1
TYPICAL SPENT FUEL CASK

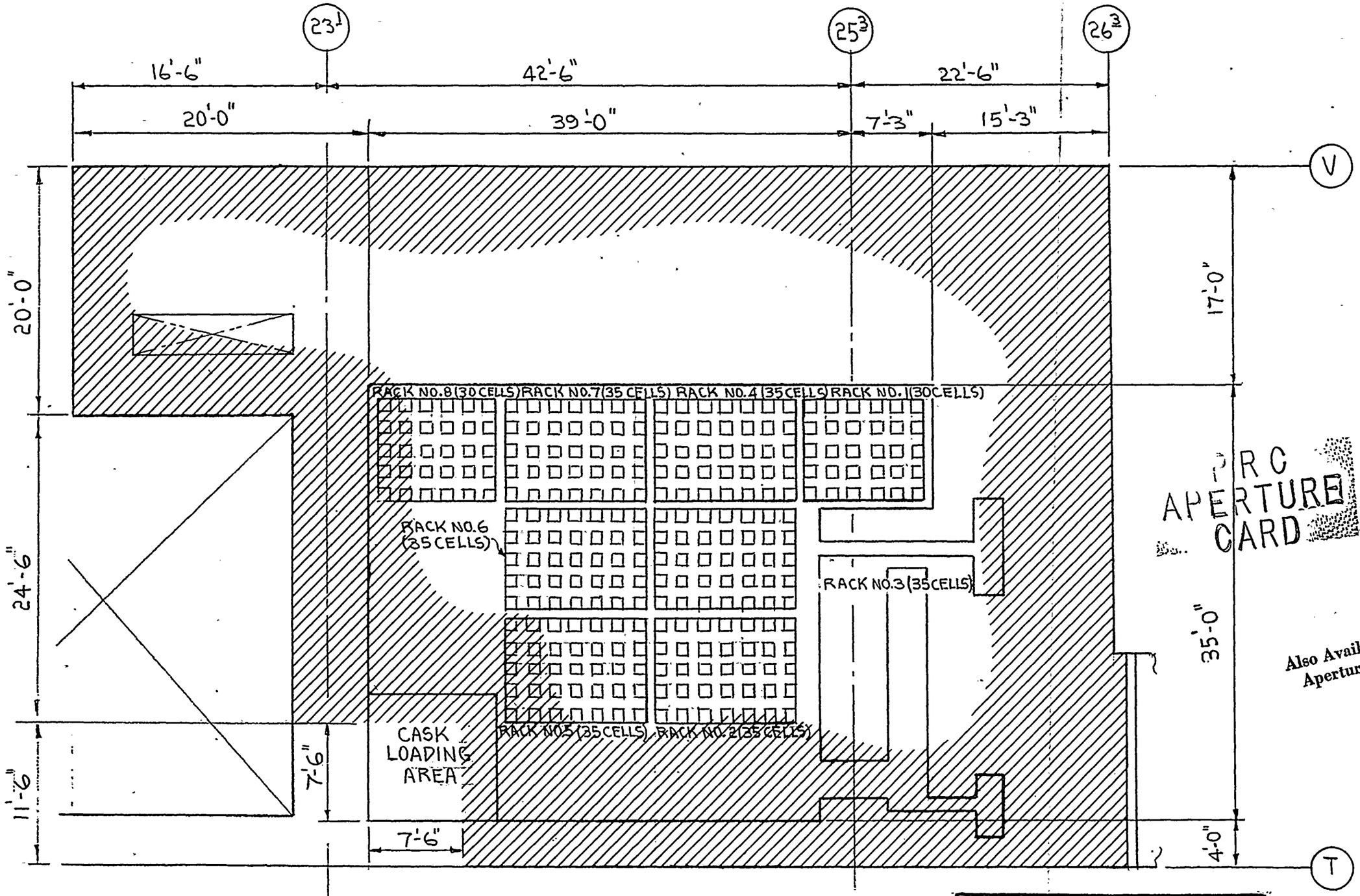

NORTH

NOT TO SCALE

UNIT 2
DIABLO CANYON SITE

FIGURE 2.2.4-2
NEW SPENT FUEL POOL
EXCLUSION AREA

NRC Request (Enclosure 3)

2.3 SPECIFIC REQUIREMENTS OF OVERHEAD HANDLING SYSTEMS OPERATING IN THE CONTAINMENT

"NUREG 0612, Section 5.1.3, provides guidelines concerning the design and operation of load-handling systems in the vicinity of the reactor core. Information provided in response to this section should be sufficient to demonstrate that adequate measures have been taken to ensure that in this area, either the likelihood of a load drop which might damage spent fuel is extremely small, or that the estimated consequences of such a drop will not exceed the limits set by the evaluation criteria of NUREG 0612, Section 5.1, Criteria I through III."

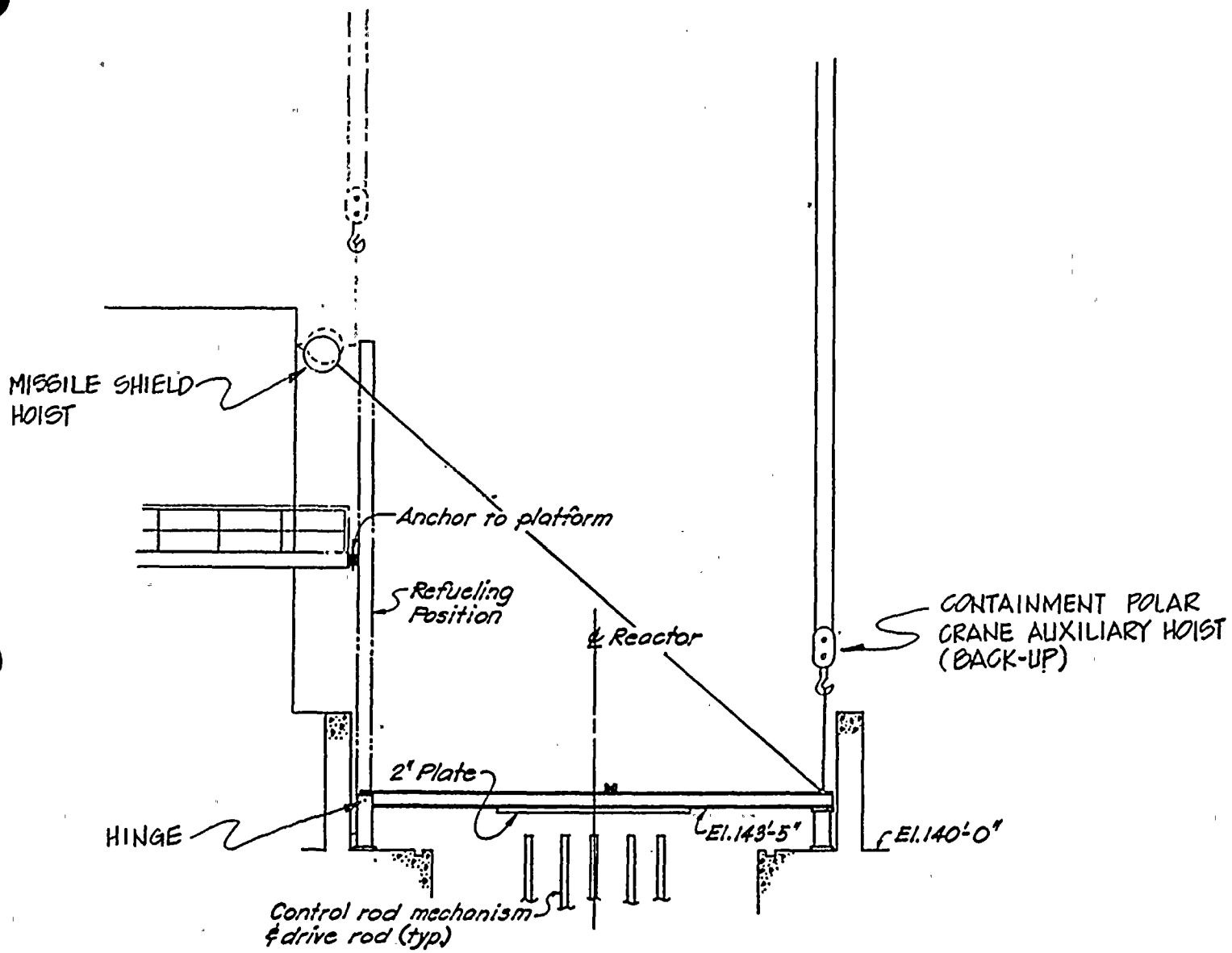

UNIT 2
DIABLO CANYON SITE

FIGURE 2.3.3-1
REACTOR MISSILE SHIELD
REDUNDANT HANDLING

PGandE Response

2.3

There are seven load-handling systems in the Diablo Canyon containment. Section 2.3.1 describes the five that operate in the vicinity of the reactor. Section 2.3.2 shows that only three carry heavy loads over or in the reactor vessel -- the containment polar crane (C-140-07), the head stud tensioner monorail (C-140-12), and the missile shield hoist (C-140-14). Section 2.3.3 shows that, with the exception of the lower internals and the reactor head stud tensioner, all of the heavy loads are carried with such extremely high levels of reliability that the intent of the NUREG-0612, Section 5.1.6 guidelines are satisfied. Section 2.3.4 analyzes the consequences of the remaining postulated drops, and demonstrates that the drops would have no effect on fuel integrity in the reactor, or on core uncovering.

NRC Request (Enclosure 3)

2.3.1

"Identify by name, type, capacity, and equipment designator, any cranes physically capable (i.e., taking no credit for any interlocks or operating procedures) of carrying heavy loads over the reactor vessel."

PGandE Response

2.3.1

There are five cranes that are physically capable of carrying heavy loads over the reactor vessel:

C-140-07	200T Containment Polar Crane (polar gantry type)
C-140-08	1T Manipulator Crane (bridge type)
C-140-10	1T Reactor Cavity Service Crane (jib boom type)
C-140-12	2T Reactor Stud Tensioner Monorail
C-140-14	15T Missile Shield Hoist

The other two cranes in the containment, C-140-09 (the ½-ton containment dome service crane) and C-140-11 (the 1-ton containment equipment hatch jib boom) can be eliminated from further consideration. The first is incapable of carrying heavy loads, and the second is located approximately forty feet from the reactor.

NRC Request (Enclosure 3)

2.3.2

"Justify the exclusion of any cranes in this area from the above category by verifying that they are incapable of carrying heavy loads, or are permanently prevented from the movement of any load either directly over the reactor vessel or to such a location where in the event of any load-handling-system failure, the load may land in or on the reactor vessel."

PGandE Response

2.3.2

The following two cranes are excluded because they are used only for carrying nonheavy loads:

C-140-08	1T	Manipulator Crane
C-140-10	1T	Reactor Cavity Service Crane

The manipulator crane is a special purpose crane for removing spent fuel from the reactor, inserting new fuel, and rearranging fuel assemblies in the reactor during refueling operations. Its load-handling device is specially designed for carrying only fuel assemblies, which are by definition not heavy loads.

The reactor cavity service crane is for miscellaneous tool handling in the reactor cavity of the containment. It carries the tool boxes for the head stud tensioners, supports the hydraulic hoses and electric cables for powering these tools, and moves the head studs between the reactor and the transfer crate. The heaviest load is a 1500-pound tool box, and this load limitation is reinforced by a permanently mounted sign on the boom, forbidding the handling of heavier loads.

NRC Request (Enclosure 3)

2.3.3

"Identify any cranes listed in 2.3.1, above, which you have evaluated as having sufficient design features to make the likelihood of a load drop extremely small for all loads to be carried and the basis for this evaluation (i.e., complete compliance with NUREG 0612, Section 5.1.6, or partial compliance supplemented by suitable alternative or additional design features). For each crane so evaluated, provide the load-handling-system (i.e., crane-load-combination) information specified in Attachment 1."

PGandE Response

2.3.3

The following heavy loads are carried with sufficient design features to make the likelihood of a load drop extremely small:

Crane	Load	Weight
C-140-07	Reactor Head with CRDMs and Head Lifting Device	172.5T
C-140-07	Upper Internals with Internals Lifting Device	77.5T
C-140-07	Unloaded Internals Lifting Device	7.5T
C-140-07	Unloaded Head Lifting Device	12.5T
C-140-07	Reactor Vessel Inspection Tool (RVIT)	5.25T
C-140-07	Unloaded Load Block	7.3T
C-140-07,-14	Missile Shield	17T

The next two subsections analyze the likelihood of dropping the reactor head and the reactor upper internals, on a probabilistic basis. The third subsection shows that, as presently modified, the containment polar crane can carry the four lightest heavy loads at a level of reliability that satisfies the NUREG-0612 requirements. The last subsection describes modifications to the missile shield load handling system that provides complete redundancy of all functional parts.

C-140-07/Reactor Head

Lifts of the reactor vessel head by the containment polar crane have been analyzed on a probablistic basis. The study identified and quantitatively analyzed, using fault tree methods, the annual probability of drop of the reactor vessel head onto the open vessel. A summary of the method used and the results are presented here.

The crane and its associated controls, the head removal and installation procedures, the testing and inspection procedures, and the training procedures were reviewed. Basic events were identified, and a fault tree constructed. The combinations of basic events (i.e., minimal cut sets) that would result in the drop of the vessel head were determined. Using estimated and published basic event probability data, the annual probability of head drop during refueling was computed.

The top event for the analysis was defined as two individual events: drop during removal and drop during installation. However, the procedures in use at Diablo Canyon require that during removal from the vessel the head be checked for level at one inch above the vessel flange. This is followed by a test of the crane brakes at six inches above the flange. To account for the additional human error and equipment failure that may occur during the initial lift, the top event (i.e., the head drop event) during removal was segmented into two individual events: drop during initial lift, and drop after initial lift.

From a careful review of the crane control systems and operating procedures, a large number of basic events were identified. The basic events contributing to the head drop were grouped under the following major descriptor events:

- Load Hangup: Results from operator attempting to lift the head before the removal of all studs. Basic events include both human errors and equipment malfunction.

- Overspeed: Results primarily from equipment failure or malfunction. Basic events include both human errors and equipment malfunction.

- Structural Failure: Results from inadequate structural strength.

Other descriptor events, such two-blocking and load-binding (from catching the head on the alignment pins), were also considered. However, the contribution from these events is insignificant.

The basic event probability data and the associated uncertainties (defined by error factors) were obtained from the following sources:

- "Control of Heavy Loads at Nuclear Power Plants" (NUREG-0612), USNRC, 1980;

- Rasmussen et al., "Reactor Safety Study" (WASH-1400), USNRC, 1975;

- Swain and Guttman, "Handbook of Human Reliability Analysis With Emphasis on Nuclear Power Plant Applications" (NUREG/CR-1278), Sandia National Laboratories, 1980;

- "System Reliability Service Data Bank" (SYREL), UKAEA.

The structural failure data taken from the above sources include the effects of design/fabrication and other human errors in addition to the effects of inadequate structural strength. These structural failure data were used for computing the load drop probability during the initial lift. The probability of structural failure after the initial lift was computed by performing structural reliability analyses for crane loads associated with the events. These structural reliability analyses were based on the very conservative assumption that ten independent elements, each with the minimum specified design strength, are present in series. Other conservatisms in the PRA analysis are:

- In most cases, the occurrence of first operator error in a minimal cut set was set to be 10^{-2}/event with an error factor of 10.

- In many cases, a crane operator error subsequent to the first operator error was assumed to be completely coupled (i.e., dependent in a statistical sense). For example, in a load hangup event or a two-blocking event, it was assumed that the operator would fail, with probability one, to press the stop pushbutton, <u>given</u> that he failed to place the master switch in the off position.

- No credit was taken for corrective action by the operator during overspeed events.

A total of 77 minimal cut sets for the Vessel Head drop were considered. The results are given in Table 2.3.3-1. The table shows that the probability of this event is sufficiently small that no specific analysis of the consequences is necessary.

C-140-07/Upper Internals

Lifts of the upper internals were analyzed using the same general method as for the reactor vessel head drop analysis. Specific modifications were made to account for differences in the structural failure probability, since failure is less likely given the successful lift of the heavier reactor vessel head. As with the head lift, the drops during the initial lift, after initial lift, and during installation were treated as individual events. The data sources and assumptions used for the quantitative analysis were the same as for the head drop analysis.

A total of 78 minimal cut sets were considered in the Upper Internals drop analysis. The results of the analysis is presented in Table 2.3.3-1 along with those for the Vessel head Drop analysis. The table shows that the probability of this event is sufficiently small that no specific analysis of the consequences is necessary.

C-140-07/Small Loads

The reliability analysis in Appendix B of NUREG-0612 shows four possible causes for a load drop:

- rigging failure
- crane component failure
- load hangup
- two-blocking

The system of C-140-07 and the four lightest heavy loads is protected against all four failure modes, with a high degree of reliability.

- Rigging failure -- For the load block load the only rigging component is the reeving. For the other three loads, the load block and the pin connecting the load to the load block are added. Thus the least reliable rigging system is the reeving-load block-pin-head lifting device system, where the weight and the number of components are maximized.

  The weight of this load system on the reeving is 12.5 + 7.3 = 19.8 tons. The design load for the reeving is 200 + 7.3 = 207.3 tons. The tensile strength of the reeving is specified in the crane purchase specification to exceed six times the design load. So the internals lifting device load system stresses the wire rope to 19.8/(207.3 * 6) = 1.59% of its yield strength, for a safety factor of 63.

  The weight of the load system on the load block is the same as on the reeving, minus the weight of the sheaves (conservatively ignored). The load block structure and hook are designed to support 207.3 tons, plus an impact adder of 30% with a stress safety factor (to yield) of no less than 1.8, according to AISE 6-1969, Table S.2.L.1.I. Thus the head lifting device load system, with the CMAA 70 maximum impact adder of 15%, stresses the load block to less than (19.8 * 1.15)/(207.3 * 1.3 * 1.8) = 4.69% of the yield strength of its components, for a safety factor of 21.3.

The connecting pin is part of the lifting device, which is analyzed in Section 2.1.3.d and Appendix A for qualification under ANSI N14.6-1978. This standard is considered in NUREG-0612 to be sufficient evidence in itselfof single-failure-proof levels of reliability. The design safety factors for the head and internals lifting device pins are shown in Tables A-3.1 and A-3.2. Their minimum values (in bending) are 4.6 and 7.6, respectively. These values are further improved by design/actual load ratios of 172.5/12.5 = 13.8 (head) and 142.5/7.5 = 19.0 (internals). So the design safety factors (to yield) for the lifting rig pins are 4.6 * 13.8 = 63.5 and 7.6 * 19.0 = 144.4, respectively.

- Crane component failure -- As mentioned above in the discussion of load block safety factors, the crane structure, rails, and supports were designed in accordance with AISE 6-1969 or the AISC standard "Specification for the Design, Fabrication, and Erection of Structural Steel for Buildings," as appropriate. The AISE design load, including the load block weight and the 30% impact adder, is 1.3 * (200 + 7.3) = 269.5 tons. This design load must not stress the components to more than 55.6% of yield. The AISC standard limits design stresses to no more than 66.7% of yield. Thus the yield-stress safety factor, while carrying the head lifting device load system, is (269.5/.556)/(19.8 * 1.15) = 21.3 for the parts built under AISE 6, and (269.5/.667)/(19.8 * 1.15) = 17.7 for the parts built under the AISC standard.

- Load hangup -- There are two ways a load can hang up on a stationary object. Either a protrusion of the load could catch on a looped or overhanging stationary object, or a protruding stationary object could catch on a hook or a loop in the load. The only overhanging or protruding stationary objects in the reactor cavity area are the reactor missile shield, the reactor cavity service crane, and the manipulator crane. The missile shield is well away from any of the load paths that go over the reactor; it is north, and the load paths are all in the east-west direction. The two cranes must be stowed away - the reactor cavity service crane latched to the reactor cavity wall, and the manipulator crane moved to the east end of its rails - as a Prerequisite to moving any load over the reactor cavity. This Prerequisite is in the Maintenance Procedure for every load whose load path is over the reactor cavity.

  One additional conceivable source of load hangups is if the RVIT guide bushings were to bind on the vessel guide studs during tool removal. This is prevented by the design of the tool; the guide bushings have a nominal radial clearance of 3/8", and a hydraulic leveling arrangement on the RVIT lifting rig keeps the RVIT firmly levelled. The RVIT is discussed further in Section 2.4.2(c)(4), and Figure 2.4.2-3 shows the RVIT and its lifting rig.

- Two-blocking -- This is the major cause of load drops when the load is much lighter than the crane capacity. Accordingly, the design of the dual travel-limit switches on the Containment Polar Crane hoists have been modified to comply with the provisions of NUREG-0554, Section 4.5. The modifications will be installed within the time specified in NUREG-0612, and tested by the alternate method described in paragraph 8 of NUREG-0612, Appendix C.

C-140-07, -14/Missile Shield

The reliability of the missile shield load handling system has been raised to a very high level by using two completely separate hoists and rigging arrangements. The rigging is shown in Figure 2.3.3-1. A new "tugger hoist" (C-140-14), mounted on the steam generator shield wall and sized to carry the maximum weight of the lift, carries most of the weight, while the auxiliary hoist is kept cinched but unloaded, as a "spring line." The design change to install this tugger hoist has been initiated, and installation will be complete within the time specified by Enclosure 3.

The arrangement provides redundancy of all mechanical, electrical, control, and rigging functions, thus satisfying the intent of the "single-failure-proof" criterion of NUREG-0612.

Conclusion

Based on the evaluations presented here, the following crane-load combinations have an extremely small probability of load drop:

Crane(s)	Load	Justification
C-140-07	Reactor Head with Lifting Device	PRA
C-140-07	Reactor Upper Internals with Lifting Device	PRA
C-140-07	Unloaded Head Lifting Device	High Safety Factor
C-140-07	Unloaded Internals Lifting Device	High Safety Factor
C-140-07	RVIT with Lifting Device	High Safety Factor
C-140-07	Unloaded Load Block	High Safety Factor
C-140-07, -14	Missile Shield	Redundancy

TABLE 2.3.3-1

MEAN PROBABILITIES OF LOAD DROPS
(PROBABILITY PER YEAR)

	Reactor Vessel Head Drop	Upper Internals Drop
During Initial Lift	4.5×10^{-5}	6.3×10^{-5}
After Initial Lift (Rest of Removal and Installation)	2.9×10^{-5}	2.9×10^{-5}
Total Probability	7.4×10^{-5}	9.2×10^{-5}

NRC Request (Enclosure 3)

2.3.4

"For cranes identified in 2.3.1, above, not categorized according to 2.3.3, demonstrate that the evaluation criteria of NUREG 0612, Section 5.1, are satisfied. Compliance with Criterion IV will be demonstrated in your response to Section 2.4 of this request. With respect to Criteria I through III, provide a discussion of your evaluation of crane operation in the containment and your determination of compliance. This response should include the following information for each crane:

a. Where reliance is placed on the installation and use of electrical interlocks or mechanical stops, indicate the circumstances under which these protective devices can be removed or bypassed and the administrative procedures invoked to ensure proper authorization of such action. Discuss any related or proposed technical specification concerning the bypassing of such interlocks.

b. Where reliance is placed on other, site-specific considerations (e.g., refueling sequencing), provide present or proposed technical specifications and discuss administrative or physical controls provided to ensure the continued validity of such considerations.

c. "Analyses performed to demonstrate compliance with Criteria I through III should conform with the guidelines of NUREG 0612, Appendix A. Justify any exception taken to these guidelines, and provide the specific information requested in Attachment 2, 3, or 4, as appropriate, for each analysis performed."

PGandE Response

2.3.4

Two heavy loads are analyzed in this section, for post-drop compliance with Criteria I through III of Section 5.1. These loads are:

Crane	Loads	Weight
C-140-07	Lower Internals, with Lifting Device	142.5T
C-140-12	Reactor Head Stud Tensioner	1.3T

Criteria I through III are satisfied, no matter which load is dropped, if the drop occurs anywhere but over the reactor vessel. Criteria I and II limit the allowable radioactive releases and neutron multiplication factor resulting from a drop onto fuel; outside the reactor, fuel assemblies must be handled one at a time, due to the design of the manipulator crane. Sections 2.1 and 2.2 of NUREG-0612 show that damage to a single 100-hour-cooled PWR fuel assembly have acceptable consequences, even in an unfiltered containment. Criterion III requires assurance that the core will not be uncovered as a result of a drop; the Diablo Canyon reactor vessel penetrations are several feet above the top of the core, so nothing short of a reactor vessel failure or failure of the residual heat removal system (covered in Section 2.4, below) could cause core uncovering. Therefore, only drops onto or into the reactor vessel will be considered.

The containment polar crane may carry other heavy loads besides those listed above, but the load paths for other loads are outwards to the annulus region. These loads are kept from moving over the reactor by administrative means.

Lower Internals Drop

The lower internals are lifted only after all the fuel is out of the reactor, so no radioactive release, criticality, or core uncovering is possible.

Reactor Head Stud Tensioner

The reactor head stud tensioner is handled by a single-purpose monorail (C-140-12), which is permanently attached to the reactor head lifting device. Furthermore, the tensioner is mounted and used only while the head is installed on the reactor vessel, and it travels only over the vessel flange. Therefore, the stud tensioner presents no threat to the fuel, since it will not penetrate the six-inch thick reactor head at a location where only a glancing impact is possible.

NRC Request (Enclosure 3)

2.4 SPECIFIC REQUIREMENTS FOR OVERHEAD HANDLING SYSTEMS OPERATING IN PLANT AREAS CONTAINING EQUIPMENT REQUIRED FOR REACTOR SHUTDOWN, CORE DECAY HEAT REMOVAL, OR SPENT FUEL POOL COOLING

"NUREG 0612, Section 5.1.5, provides guidelines concerning the design and operation of load-handling systems in the vicinity of equipment or components required for safe reactor shutdown and decay heat removal. Information provided in response to this section should be sufficient to demonstrate that adequate measures have been taken to ensure that in these areas, either the likelihood of a load drop which might prevent safe reactor shutdown or prohibit continued decay heat removal is extremely small, or that damage to such equipment from load drops will be limited in order not to result in the loss of these safety-related functions. Cranes which must be evaluated in this section have been previously identified in your response to 2.1.1, and their loads in your response to 2.1.3.c."

PGandE Response

2.4

This section demonstrates that no heavy load drop from any load path would result in loss of safe shutdown or decay heat removal capability. This conclusion is based on the Load/Impact Matrix, Table 2.4.2-1. Section 2.4.1 treats the question of very-high-reliability cranes at Diablo Canyon. All of the cranes at Diablo Canyon are designed for high reliability, though none completely satisfies the requirements in NUREG-0612, Section 5.1.6 for single-failure-proofness. Section 2.4.2.a presents and explains the Load/Impact Matrix. Section 2.4.2.b discusses the hazard elimination categories "b" (redundancy of impacted components), "a" (crane stops), and "c" (scheduling). Section 2.4.2.c discusses the seven crane/load combinations for which the probability of a load drop is extremely small (hazard elimination category "d"). Section 2.4.2.d lists the load/impacts for which structural evaluation of floors have shown continued safe-shutdown capability after a postulated drop (hazard elimination category "e").

NRC Request (Enclosure 3)

2.4.1

"Identify any cranes listed in 2.1.1, above, which you have evaluated as having sufficient design features to make the likelihood of a load drop extremely small for all loads to be carried and the basis for this evaluation (i.e., complete compliance with NUREG-0612, Section 5.1.6, or partial compliance supplemented by suitable alternative or additional design features). For each crane so evaluated, provide the load-handling-system (i.e., crane-load-combination) information specified in Attachment 1."

PGandE Response

2.4.1

While the cranes at Diablo Canyon were not designed to satisfy the criteria of NUREG-0612, Section 5.1.6, for all loads to be carried, they are nevertheless designed for high operating reliability. For example, the Containment Polar Crane has been shown in Section 2.3.3 above, to have a reliability of 99.99% per lift. Moreover, in some cases the heavy loads are very light in relation to the crane's design capacity, and all of the major cranes have been modified with fully redundant hoist travel limit switches, so the probability of dropping these "light" heavy loads is negligible. These crane/load combinations are discussed in Section 2.4.2.c.

NRC Request (Enclosure 3)

2.4.2.a

"For any cranes identified not designated as single-failure-proof in 2.4.1, a comprehensive hazard evaluation should be provided which includes the following information:

The presentation in a matrix format of all heavy loads and potential impact areas where damage might occur to safety-related equipment. Heavy loads identification should include designation and weight or cross-reference to information provided in 2.1.3.c. Impact areas should be identified by construction zones and elevations or by some other method such that the impact area can be located on the plant general arrangement drawings. Figure 1 provides a typical matrix."

PGandE Response

2.4.2.a

Table 2.4.2-1 is the load/impact matrix requested. It is the result of studies performed by PGandE, related to the plant components needed for safe shutdown, including active equipment, pipes, instrument tubing, electrical cables, and HVAC ducts. The following paragraphs discuss each column of the matrix.

(1) Load. The impacts are grouped according to the "scoping load". The scoping load is the largest load in plan area that moves along a particular section of load path. This load requires the greatest separation of redundant components, so if the damage from that load drop is acceptable, then the damage from dropping smaller loads at the same location is also acceptable. Smaller loads are not shown. Floor structural evaluations include consideration of drop height, impact area, and deformability. The weight of the scoping load is in parentheses after the load name.

(2) Elevation. This is the elevation level of the floor where the impact occurs, not the actual elevation of the impact. Most pipes, tubes, cables, and ducts are run under the ceiling of the next higher floor. For example, line 48 passes under the load path of RHR heat exchanger 1-1 at elevation 112', so it is listed as an impact on the floor below 112', which is 100'. The impact elevation is used for finding which plant area drawing shows the impacted component.

(3) Floor Coordinates. This is for finding the impact on the plant area drawings, and for determining whether the impact is less than a load length away from other impacts (and therefore to be considered a common effect of a single drop). The coordinate system is the standard one for all Diablo Canyon drawings. Containment coordinates are azimuthal angle from plant north and radius from containment center. The coordinates in the other buildings are Cartesian. East-west distances are measured in feet east of the lettered north-south column lines (e.g., V+6 feet), and north-south distances are measured in feet south of the numbered east-west column lines (e.g., 15'+10 feet). Thus, V+6, 15'+10 is 6 feet east and 10 feet south of column line intersection V-15'.

(4) Component Impacted. The components are listed according to the Diablo Canyon numbering scheme used in the FSAR. In particular, pipes are called "line xxxx," tubing is named by the active component it serves (e.g., "FCV-602 tubing"), and conduits are called "conduit yyyy." The safe shutdown equipment served by each tubing or conduit run is described in parentheses after the name of the run.

The pipe lengths are followed by a code in parentheses describing the safe shutdown flow path (or paths) that would be lost by the loss of the pipe. The safe shutdown functions considered are:

Function	Flow Path 1	Flow Path 2	Flow Path 3
Core Depressurization	B1	B2	
Charging and Boration	C1	C2	
High Pressure Cooling (steam dump)	D1	D2	
Low Pressure Cooling (RHR)	E1	E2	E3

The redundant flow paths for each function are designated as shown. These flow path symbols are shown in the load/impact matrix following the line number. Flow Path A, the reactor coolant pressure boundary, is not listed because it is part of a class of pipes inside the containment that is excluded bodily from the load/impact matrix, as described in Section 2.4.2.b.

Most of the equipment connected to the safe shutdown flow paths has cross-ties to redundant paths, so redundancy of equipment and redundancy of flow paths can generally be considered independently. The pieces of equipment that cannot be switched between flow paths and the tubing, cabling, and ventilation ducting that serve them, are identified by their flow paths in parentheses.

5. Hazard Elimination Category. This column is filled with one of five letters, paralleling the hazard elimination categories of Figure 1 of Enclosure 3. They are listed below, with a short description and a reference to the section of this submittal where they are discussed in detail.

Code	Description	Reference Section
a	Mechanical Stops or Electrical Interlocks	2.4.2.b(2)
b	Safe Shutdown Preserved by Redundancy/Diversity	2.4.2.b(1)
c	Site-specific Considerations (Load Scheduling)	2.4.2.b(3)
d	Probability of Drop Extremely Small	2.4.2.c
e	Damage Prevented by Intervening Floor(s)	2.4.2.d

6. Notes. This section amplifies the hazard elimination justification keyed in Column 5. Only the specific information needed for the particular impact is provided in this column (e.g., the name of the redundant equipment or flow path, or the nature and location of the physical restraint). The general description of the hazard elimination justification is in the referenced section.

Figure 2.4.2-1 LOAD/IMPACT MATRIX (sheet 1 of 8)

PART I. CONTAINMENT POLAR GANTRY CRANE (C-140-07)

LOAD	ELEVATION	FLOOR COORDINATES	COMPONENT IMPACTED	HAZARD ELIM. CATEGORY	NOTES
A. Reactor Head (172.5T)	117'	230° → 240°, 25	Conduit KX511 (TE-443B, Reactor Coolant Temperature)	b	Redundant TE-413B, -423A, -423B, -433A, -433B, -443A, -443B
	100'	120° → 240°, 34' → 50'	Line 24 (E1, E2)	d	See Reliability Analysis, Section 2.3.3
	100'	211° → 230°, 22' → 47'	Line 109 (E2)	b	Redundant RHR Path E1
	100'	225°, 8' → 50°	Line 12 (E2, E3)	b	Redundant RHR Path E1
	100'	230° → 251°, 27' → 50°	Line 1991 (E2)	b	Redundant RHR Path E1
	100'	233° → 257°, 23' → 57'	Line 1994 (E2)	b	Redundant RHR Path E1
	100'	234°, 26'	Line 246 (E2, E3)	b	Redundant RHR Path E1
	100'	239° → 245°, 28' → 30'	Line 1159 (E2)	b	Redundant RHR Path E1
	100'	270° → 290°, 21' → 26'	Line 1991 (E2)	b	Redundant RHR Path E1
	100'	270° → 325°, 53' → 38'	Line 24 (E1, E2)	d	See Reliability Analysis, Section 2.3.3
	100'	315°, 37'	Line 9 (E1, E2)	d	See Reliability Analysis, Section 2.3.3

Figure 2.4.2-1 LOAD/IMPACT MATRIX (sheet 2 of 8)

PART I. CONTAINMENT POLAR GANTRY CRANE (C-140-07) (Cont'd)

LOAD/IMPACT	ELEVATION	FLOOR COORDINATES	COMPONENT IMPACTED	HAZARD ELIM. CATEGORY	NOTES
F. Head Lifting Device (4.5T)	100'	45°, 33'	Line 10 (E1, E2)	d	See Reliability Analysis, Section 2.3.3
	100'	135°, 8' → 30'	Line 11 (E2, E3)	d	See Reliability Analysis, Section 2.3.3
H. RCP Motor (43.8T)	140'	238°, 25'4" → 36'9"	PT-403, PT-405 Tubing (Reactor Coolant Pressure)	b	Tubing for One P.T. Will Be Rerouted Away From the Load Path
	117'	6° → 48°, 64' - 67'	Line 3845 (E1)	b	Redundant RHR Path E3
	117'	6° → 298°, 56' → 67'	Line 508 (E1)	b	Redundant RHR Paths E2, E3
	117'	317° → 5°, 48' → 87'	Line 3844 (E1)	b	Redundant RHR Paths E2, E3
	107' 6"	40° → 50°, 36' → 42'	Line 24 (E1, E2)	b	Redundant RHR Path E3
	100'	40° → 45°, 26' → 57'	Line 254 (E1, E2)	b	Redundant RHR Path E3
	100'	45° → 52° 40' → 50'	Line 2000 (E1)	b	Redundant RHR Paths E2, E3
	100'	45° → 55°, 21' → 28'	Line 1146 (E1, E2)	b	Redundant RHR Path E3

Figure 2.4.2-1 LOAD/IMPACT MATRIX (sheet 3 of 8)

PART I. CONTAINMENT POLAR GANTRY CRANE (C-140-07) (Cont'd)

LOAD	ELEVATION	FLOOR COORDINATES	COMPONENT IMPACTED	HAZARD ELIM. CATEGORY	NOTES
H. RCP Motor (43.8T) (Cont'd)	100'	103° → 107°, 37' → 51'	Line 2000 (E1)	b	Redundant RHR Path E3
	100'	120°, 48'	Line 50 (E2, E3)	b	Redundant RHR Path E1
	100'	211° → 240°, 59'	Line 508 (E1)	b	Redundant RHR Paths E2, E3
	100'	224°, 35' → 39'	Line 1158 (E2, E3)	b	Redundant RHR Path E1
	100'	224°, 42' → 55'	Line 238 (E2)	b	Redundant RHR Path E1
	100'	311° → 314°, 37' → 49'	Line 1999 (E1)	b	Redundant RHR Path E3
	100'	315°, 37' → 55'	Line 253 (E1, E2)	b	Redundant RHR Path E3
	100'	325°, 45'	Line 13 (E1, E2)	b	Redundant RHR Path E3
	91'	40°, 57'	Line 254 (E1, E2)	b	Redundant RHR Path E3
	91'	45°, 32'	Line 6 (E1, E2)	b	Redundant RHR Path E3
	91'	135°, 32'	Line 7 (E2, E3)	b	Redundant RHR Path E1
	91'	145°, 33'	Line 1153 (E2, E3)	b	Redundant RHR Path E1
	91'	224°, 38'	Line 1158 (E2, E3)	b	Redundant RHR Path E3

Figure 2.4.2-1 LOAD/IMPACT MATRIX (sheet 4 of 8)

PART I. CONTAINMENT POLAR GANTRY CRANE (C-140-07) (Cont'd)

LOAD	ELEVATION	FLOOR COORDINATES	COMPONENT IMPACTED	HAZARD ELIM. CATEGORY	NOTES
H. RCP Motor (43.8T) (Cont'd)	91'	225°, 36'	Line 961 (E2, E3)	b	Redundant RHR Path E1
	91'	230°, 36'	Line 8 (E2, E3)	b	Redundant RHR Path E1
	91'	236°, 55'	Line 256 (E2, E3)	b	Redundant RHR Path E1
	91'	293° → 315°, 55'	Line 253 (E1, E2)	b	Redundant RHR Path E3
	91'	310°, 36'	Line 5 (E1, E2)	b	Redundant RHR Path E3
	91'	311°, 49'	Line 1999 (E1)	b	Redundant RHR Path E3
	91'	314° → 320°, 40'	Line 958 (E1, E2)	b	Redundant RHR Path E3
M. Reactor Vessel Inspection Tool (5.2T)	117'	181°, 15'	Conduit KX513 (TE-433A and TE-433B, Reactor Coolant Temperature)	b	Redundant TE-413A, -413B, -423A, -423B, -443A, and -443B
	117'	155°, 15'	Conduit KX515 (TE-433B, Reactor Coolant Temperature)	b	Redundant TE-413A, -413B, -423A, -423B, -433A, -443A, and -443B
	100'	105°, 55'	Valve 8148 Tubing (Charging & Boration)	c	Load Lifted Only After Cold Shutdown
	100'	116°, 55'	Valve 8145, 8146, 8147 Tubing (Charging & Boration)	c	Load Lifted Only After Cold Shutdown

Figure 2.4.2-1 LOAD/IMPACT MATRIX (sheet 5 of 8)

PART I. CONTAINMENT POLAR GANTRY CRANE (C-140-07) (Cont'd)

LOAD	ELEVATION	FLOOR COORDINATES	COMPONENT IMPACTED	HAZARD ELIM. CATEGORY	NOTES
M. Reactor Vessel Inspection Tool (5.2T) (cont'd)	100'	114° → 161°, 54' → 68'	Line 50 (E2, E3)	b	Redundant RHR Path E1
	100'	123° → 146°, 68'	Line 24 (E1, E2)	b	Redundant RHR Path E3
	100'	129°, 24'	Line 1152 (E2, E3)	b	Redundant RHR Path E1
	100'	130° → 182°, 26' → 55'	Line 255 (E2, E3)	b	Redundant RHR Path E1
	100'	131° → 187°, 16' → 28'	Line 1993 (E2)	b	Redundant RHR Path E1
	100'	135°, 8' → 30'	Line 11 (E2, E3)	b	Redundant RHR Path E1
	100'	158°, 8' → 20'	Line 3 (E2)	b	Redundant RHR Path E1

Figure 2.4.2-1 LOAD/IMPACT MATRIX (sheet 6 of 8)

PART II. SPENT FUEL AREA BRIDGE CRANE (AF-140-08)

LOAD	ELEVATION	FLOOR COORDINATES	COMPONENT IMPACTED	HAZARD ELIM. CATEGORY	NOTES
A. New Fuel Cask (3T)	100'	T + 19', 21 + 1' → 16'	Line 222 (B2, C2)	b	Redundant Depressurization and Charging Paths (B1, C1)
B. Spent Fuel Cask (67.5T)	100'	T + 4' → 12', 21 + 16'	Line 222 (B2, C2)	b	Redundant Depressurization and Charging Paths (B1, C1)

Figure 2.4.2-1 LOAD/IMPACT MATRIX (sheet 7 of 8)

PART III. FUEL HANDLING BUILDING MONORAILS

LOAD	ELEVATION	FLOOR COORDINATES	COMPONENT IMPACTED	HAZARD ELIM. CATEGORY	NOTES
AF-100-14. AFW Pump 2-2 Motor (2.15T)	85'	20^3, T-U	Conduit K6993 (AFW Pump 2-3)	b	Redundant AFW Pump 1-1

Figure 2.4.2-1 LOAD/IMPACT MATRIX (sheet 8 of 8)

PART IV. TURBINE BUILDING MONORAILS

LOAD	ELEVATION	FLOOR COORDINATES	COMPONENT IMPACTED	HAZARD ELIM. CATEGORY	NOTES
T-119-12. MSR 2-2A HP Tube Bundle (14.5T)	85'	F + 3, 22 → 20[3]	CCW HX 2-2	e	Will Not Penetrate Floor at Elevation 119'
	85'	F+5, 20 + 12	Line 104 (B2, C2, E2, E3)	e	Will Not Penetrate Floor at Elevation 119'
	85'	F + 3, 20 + 19	Line 103 (B1, C1, E1)	e	Will Not Penetrate Floor at Elevation 119'
	85'	F + 3, 20 + 25	Line 95 (B1, C1, E1)	e	Will Not Penetrate Floor at Elevation 119'
	85'	F + 3, 21	FCV-602 Tubing (CCW HX 2-1 ASW Inlet)	e	Will Not Penetrate Floor at Elevation 119'
	85'	F + 5, 21 + 8	Line 96 (B2, C2, E2, E3)	e	Will Not Penetrate Floor at Elevation 119'
	85'	F + 5, 21 + 16	Line 714 (B2, C2, E2, E3)	e	Will Not Penetrate Floor at Elevation 119'

NRC Request (Enclosure 3)

2.4.2.b

"For each interaction identified, indicate which of the load and impact area combinations can be eliminated because of separation and redundancy of safety-related equipment, mechanical stops and/or electrical interlocks, or other site-specific considerations. Elimination on the basis of the aforementioned considerations should be supplemented by the following specific information:

(1) For load/target combinations eliminated because of separation and redundancy of safety-related equipment, discuss the basis for determining that load drops will not affect continued system operation (i.e., the ability of the system to perform its safety-related function).

(2) Where mechanical stops or electrical interlocks are to be provided, present details showing the areas where crane travel will be prohibited. Additionally, provide a discussion concerning the procedures that are to be used for authorizing the bypassing of interlocks or removable stops, for verifying that interlocks are functional prior to crane use, and for verifying that interlocks are restored to operability after operations which require bypassing have been completed.

(3) Where load/target combinations are eliminated on the basis of other, site-specific considerations (e.g., maintenance sequencing), provide present and/or proposed technical specifications and discuss administrative procedures or physical constraints invoked to ensure the continued validity of such considerations.

PGandE Response

2.4.2.b

This section discusses three of the five hazard elimination categories that are used in the Load/Impact Matrix to show that no postulated load drop would impair the ability to safely shut down Diablo Canyon. The three categories are: (1) separation and redundancy, (2) mechanical stops or electrical interlocks, and (3) load scheduling. Because there are more than five hundred load/impacts listed, a separate analysis of each impact would make this report unnecessarily large and unwieldy. Therefore, the general points of each type of analysis used to develop the matrix are given here and in the following two sections. The information needed to fill out the analysis for each particular load/impact is given in the "Notes" column of Table 2.4.2-1.

(1) Redundancy. Diablo Canyon's safe shutdown systems were designed on the principle of redundancy of all active components, in order to meet the single failure criterion. The extensive equipment redundancy resulted in considerable redundancy of pipes, tubing, and ventilation ducts as well.

Electric circuits and instrument tubing runs are all designed to serve only one piece of active equipment each, so equipment redundancy implies redundancy of these auxiliaries. Thus, electrical cabling and instrument tubing redundancy is treated by the effect of their failure on the redundant active components.

The redundancy of a piping system cannot be analyzed by individual piping segments (lines), but by the ability of the system as a whole to maintain flow and retain pressure after a failure. The piping system at Diablo Canyon provides flow paths for five safe shutdown functions:

A = reactor coolant circulation
B = core depressurization (pressurizer spray)
C = charging and boration
D = high-pressure cooling (steam dump)
E = low-pressure cooling (RHR)

The flow path for Function A is not redundant; the hazard from load drops onto the reactor coolant pressure boundary is eliminated by load scheduling, as discussed in Section 2.4.2.b(3). Two flow paths were chosen for each of the other functions (three for Function E). The individual lines were then listed for each flow path. Of the total of 277 lines, only fifteen are common to all redundant flow paths for any function.

In the load/impact matrix, redundancy based on physical separation eliminates the hazard unless a single drop of the largest load carried along a load path impacts all redundant active components or their attendant electric circuits or tubing runs, or unless a single drop hits enough pipes to eliminate all redundant flow paths for any function.

One final consideration is the loss of an active component, such as a valve or its control wiring or tubing, that could eliminate a flow path. Then the flow path could be lost even if no lines for that flow path were lost. Because of extensive use of cross-ties, most safe shutdown equipment can be valved into either of the redundant flow paths. But when the equipment loss also causes the loss of a flow path, the equipment is listed in the "Component Impacted" column as part of a flow path as well, and its postulated loss is analyzed for its effect on both equipment redundancy and flow path redundancy.

(2) Mechanical stops. None of the Unit 2 cranes or monorails has mechanical stops, so this hazard elimination category was not used in the Unit 2 analysis.

(3) Load Scheduling. Once cold shutdown is achieved, the components needed only to achieve it (not maintain it) can be impacted without creating a hazard.

An entire class of load/impacts in the Containment was left out of the load/impact matrix because of load scheduling, for clarity's sake. Examples of systems in the containment that are needed only to achieve cold shutdown are:

- reactor pressure boundary
- pressurizer spray
- charging and boration
- high-pressure core cooling (steam dump)

The only safe shutdown function that is needed in the Containment during Operating Modes 5 (cold shutdown) and 6 (refueling) is the continuity and pressure boundary of at least one RHR flow path.

On the other hand, the Containment Polar Crane is the only crane in the containment that carries heavy loads over safe shutdown components, and it is used as such only during operating modes 5 and 6. So the only heavy load in the containment during non-cold-shutdown periods is the Containment Polar Crane load block. This crane/load combination was shown in Section 2.3.3 to be held with extremely high levels of reliability.

NRC Request (Enclosure 3)

2.4.2.c

"For interactions not eliminated by the analysis of 2.4.2.b, above, identify any handling systems for specific loads which you have evaluated as having sufficient design features to make the likelihood of a load drop extremely small and the basis for this evaluation (i.e., complete compliance with NUREG 0612, Section 5.1.6, or partial compliance supplemented by suitable alternative or additional design features). For each crane so evaluated, provide the load-handling-system (i.e., crane-load-combination) information specified in Attachment 1."

PGandE Response

2.4.2.c

Section 2.3.3 above showed that the conservative design of the Containment Polar Crane, combined with lifting procedures designed to catch any problems before they cause a drop, results in a highly reliable lifting system for the reactor head and upper internals. Nevertheless, because of their importance to safety, these load drops were analyzed both into the reactor (Section 2.3.4) and along their load paths to their laydown areas (Table 2.4.2-1). The following heavy loads are very light in relation to their cranes' capacity, and safety modifications have been made to the cranes, so the probability of dropping these particular loads is extremely small.

Crane	Load	Weight [tons]
C-140-07	Main Hoist Load Block	7.3
C-140-07	Load Block + Internals Lifting Device	14.8
C-140-07	Load Block + Head Lifting Device	19.8
C-140-07	Load Block + RVIT	12.55
AF-140-08	Main Hoist Load Block	2.5
T-140-01(-02)	Main Hoist Load Block	3

The following subsections detail why dropping these loads is considered incredible. The analysis for each load addresses the four main causes of load drops as stated in Appendix B of NUREG-0612:

- rigging failure,
- crane component failure,
- load hangup, and
- two-blocking,

and shows that the load is protected against each type of failure to a high degree of reliability.

C-140-07/Main Hoist Load Block

This crane/load combination is inside the envelope analyzed in Section 2.3.3, except that the area for investigation of possible load hangups is the entire containment instead of the reactor cavity area, since the load block has no specific load path. Figure 2.4.2-1 shows that the load block has no protrusions to catch on a stationary object (such as the crane's gantry leg cross brace), since the hook is protected from above by the sheaves. Inspection of the containment between Elevations 140 feet and 202 feet has revealed no protruding stationary object that would fit through the reeving or catch on the hook. The lack of suitable objects for load hangup within the range of the load block, plus the very high safety factors and redundant limit switches, make a load block drop extremely improbable.

C-140-07/Load Block + Internals Lifting Device

This crane/load combination is entirely inside the envelope analyzed in Section 2.3.3, because the internals lifting device load path (C-140-07E) lies entirely within the reactor cavity.

C-140-07/Load Block + Head Lifting Device

This crane/load combination is also entirely inside the envelope analyzed in Section 2.3.3, for the same reason as the paragraph above.

C-140-07/Load Block + Reactor Vessel Inspection Tool (RVIT)

This crane/load combination is inside the envelope analyzed in Section 2.3.3, except for the possibility of load hangups outside the reactor cavity area. The RVIT is assembled inside the crane rail, near the RCP 1-3 motor maintenance mount area, then carried into the reactor along the same load path as the head studs basket (C-140-07L). The RVIT support legs stick out from their lifting device, but not in such a way as to engage in a looped or overhanging stationary object, unless the overhang is hooked downward or 8 feet deep. There are no such overhangs on the RVIT load path. The transducer arm is fully retracted and positioned under one of the support legs during the installation and removal of the RVIT, so the support leg protects the transducer arm from hangups. Finally, an inspection of the load path has revealed no protruding stationary objects that could catch in the RVIT or the crane reeving.

AF-140-08/Main Hoist Load Block

This crane/load combination was shown, in Section 2.2.3, to be protected against failure by redundant limit switches and redundantly high design safety factors.

T-140-01(-02)/Main Hoist Load Block

The load block weighs 3 tons, and the crane is rated at 115 tons.

- Rigging failure -- For the load block the only rigging component is the reeving, which was specified at purchase to have a tensile strength at least six times the design load. So the safety factor with the load block only is 6 * (115 + 3)/3 = 236.

- Crane component failure -- The crane structure, rails, and supports were designed in accordance with AISE 6-1969, "Specification for Electric Overhead Travelling Cranes for Steel Mill Service," or the AISC standard "Specification for the Design, Fabrication, and Erection of Structural Steel for Buildings", as appropriate. The AISE standard calculates the design load from the rated load by adding the weight of the load block, then adding 30 percent of the total for impact. For the turbine building bridge crane, this amounts to (115 + 3) * 1.3 = 153.4 tons. This design load must not stress any component to more than 55.6 percent of its yield strength. The AISC standard limits design stresses to 66.7 percent or less of

yield. The actual load, including the maximum CMAA 70 impact adder of 15 percent, is 3 * 1.15 = 3.45 tons. So the actual safety factor for this crane/load combination is (153.4/3.45)/.556 = 80 or more for the parts designed to AISE 6-1969, and (153.4/3.45)/.667 = 66.7 or more for the parts designed to the AISC standard.

- Load hangup -- Hangups occur when some protrusion of a load is caught in or under a looped or overhanging stationary object, or when a protruding stationary object is caught in a loop of the load. The load block has no protrusions outside the reeving, and there are no protruding objects anywhere in the traveling range of the load block that would fit over the hook of the load block or into the loops of the reeving.

- Two-blocking -- This is historically the dominant cause of load block drops. Accordingly, the design of the dual travel-limit switches on the turbine building bridge crane main hoist has been modified to comply with the provisions of NUREG-0554, Section 4.5. The modification will be installed within the time specified by NURE-0612, and tested by the alternate method described in paragraph 8 of NUREG-0612, Appendix C.

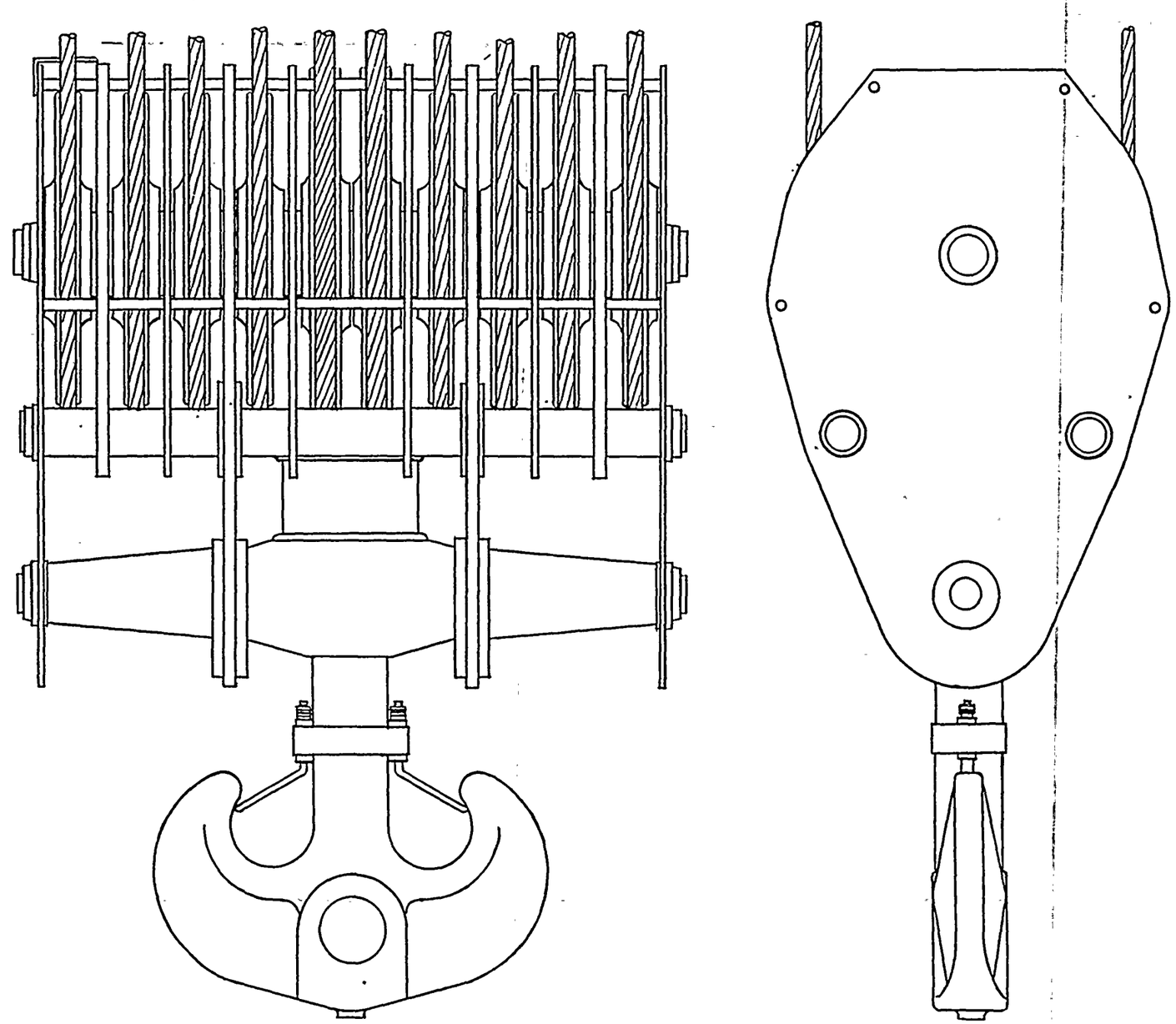

Also Available On
Aperture Card

UNIT 2
DIABLO CANYON SITE

FIGURE 2.4.2-1
CONTAINMENT POLAR CRANE
LOAD BLOCK

NRC Request (Enclosure 3)

2.4.2.d

"For interactions not eliminated in 2.4.2.b or 2.4.2.c, above, demonstrate using appropriate analysis that damage would not preclude operation of sufficient equipment to allow the system to perform its safety function following a load drop (NUREG-0612, Section 5.1, Criterion IV). For each analysis so conducted, the following information should be provided:

(1) An indication of whether or not, for the specific load being investigated, the overhead crane-handling system is designed and constructed such that the hoisting system will retain its load in the event of seismic accelerations equivalent to those of a safe shutdown earthquake (SSE).

(2) The basis for any exceptions taken to the analytical guidelines of NUREG 0612, Appendix A.

(3) The information requested in Attachment 4."

PGandE Response

2.4.2.d

There is one location where a load drop could cause a loss of safe shutdown capability if the load continued through all intervening floors. The tube bundles of moisture separator reheater (MSR) 2-2A are pulled from their shell directly over the CCW heat exchanger but two floors above. The hazard from this postulated drop is not eliminated by considerations of separation and redundancy, physical restraints on crane movement, load scheduling, or extremely small load drop probability.

In addition, a number of heavy loads weighting 5.5 tons or less, of varying shapes and sizes, are carried over the turbine building operating deck. Their lift height is generally limited to twelve inches over the deck by operating procedure. This section shows that these loads need no load paths, because dropping them could not have unacceptable consequences.

Section 2.4.2.d of Enclosure 3 requests information on the postulated impacts in three areas:

(1) The ability of a handling system to retain its load during a safe shutdown earthquake does not apply to this analysis. Hoist failure is assumed, and the direction of PGandE's response throughout is that the resulting postulated load drop would not endanger safe- shutdown capability. The initiating event for a crane failure could be an earthquake or any other cause. It has been PGandE's approach not to prove that a postulated accident is impossible if its consequences can be shown to be acceptable.

(2) No exception is taken to the guidelines of NUREG-0612, Appendix A.

(3) The format provided in Attachment 4 of Enclosure 3 has been used to report the structural evaluation of plant structures subjected to the postulated the heavy load drops. The details of the assumptions, methodology used and conclusions for each drop case are presented in Appendix C. A summary is provided in the following paragraphs.

Attachment 4 of Enclosure 3 requires that the consequences of any postulated load drop be evaluated to demonstrate compliance with Criteria III and IV of NUREG-0612, Section 5.1. This was done using the following basic approach:

> If there is an intervening floor or floors between the heavy load and its postulated target, and if it can be shown that the drop of the heavy load does not 1) result in structural collapse of the floor structure, or 2) result in the perforation of the floor slab, or 3) does not generate destructive secondary missiles that could hit the target, then the functioning of the safe-shutdown component is assured in spite of the load drop.

Using this basic approach, the consequences of the postulated load drop were evaluated in terms of local damage and overall structural collapse. Local damage was assessed in terms of perforation and spalling using semi-empirical equations based on published test results. Actual floor thicknesses were compared to the minimum thicknesses required to preclude perforation and spalling. Overall structural ability to prevent collapse was evaluated using

an energy balance technique. Accordingly, the strain energy capacity of the structure at the lower-bound collapse load and at its deformation limit (based on permissible ductility ratio) was equated to the kinetic energy of the postulated drop. In computing the strain energy capacity, all appropriate failure modes (such as shear, bending, membrane action, etc.) were considered.

Using the results of local damage and overall structural response evaluation, the lift heights were modified so that the postulated load drop would not result in any of the following unacceptable consequences:

a. Perforation (i.e., complete penetration) of the floor slab,
b. Collapse of the floor structure, and
c. Generation of secondary missile that can cause unacceptable damage to essential components.

The lift height limitations have been incorporated into the applicable operating procedures. Thus, Criteria III and IV are satisfied.

APPENDIX A

EVALUATION OF RPV HEAD AND INTERNALS LIFTING DEVICES AGAINST ANSI N14.6-1978 AND NUREG-0612 REQUIREMENTS

A1.0 INTRODUCTION

The RPV head lift rig and the reactor internals lift rig were designed and built by Westinghouse for Diablo Canyon Nuclear Power Plant before 1971, i.e., prior to the issuance of ANSI N14.6-1978. Hence, these two devices were not designed to comply with the requirements of ANSI N14.6-1978. However, a detailed item-by-item comparison of these requirements and those used for the design, manufacture, inspection, maintenance, and testing of these two devices were performed by Westinghouse. A summary of this comparison is presented in Section A2.0 of this appendix. This section also identifies the areas where the ANSI requirements are not directly satisfied or are not directly applicable. For these areas either justifications have been provided in support of taking exceptions to ANSI N14.6 requirements or equivalent alternatives have been proposed.

In addition to the item-by-item comparison of requirements, a detailed stress evaluation of the major load carrying components of the two lifting rigs and the load cell linkage was performed to determine the actual margins of safety. The computed stresses and the margins of safety were examined in the light of applicable ANSI N14.6-1978 and NUREG-0612 requirements. These results are presented in Section A3.0 of this appendix. The computed stresses were always found to be well below the material yield strengths, or applicable AISC allowables, thereby demonstrating a reasonable degree of safety against structural failure. A few of the components, however, do not satisfy the ANSI N14.6-1978 margin of safety criteria when supplemented by NUREG-0612. The available stress design factors for these components were examined critically, and justifications have been provided to demonstrate that these components are structurally adequate.

A2.0 COMPARISON OF THE REQUIREMENTS

ANSI N14.6-1978 contains detailed requirements for the design, fabrication, testing, maintenance, and quality assurance of special lifting devices. This document was not in existence when Westinghouse designed, fabricated, and tested the RPV head and internals lift rigs. Westinghouse had defined the design, fabrication, and quality assurance requirements on detailed manufacturing drawings and purchase order documents. Westinghouse also issued field assembly instructions for these two rigs which included an initial load test followed by nondestructive surface examinations of critical welds. These requirements have been compared to ANSI N14.6-1978 requirements. A summary of the comparison of those requirements which are considered important in demonstrating the continued load handling reliability of the lifting devices is presented in this section. This comparison identified a few

areas in which the devices are not in strict compliance with the applicable ANSI N14.6 requirements. These incompatibilities are also discussed in this section, along with their resolutions.

A2.1 ANSI N14.6-1978, Section 3.1: Designer's Responsibilities

a. Preparation of Design Specification and a Stress Report

Assembly drawings, detailed manufacturing drawings, and purchasing documents contain the following requirements, which are considered to be equivalent to a design specification:

(i) ASTM or ASME specifications or specially listed requirements for the critical load path items;

(ii) Welding, weld procedures, and welds to be in accordance with ASME Boiler and Pressure Vessel Code - Section IX;

(iii) Special nondestructive testing for specific critical load path items to be performed to written and approved procedures in accordance with ASTM or specified requirements;

(iv) Letters of compliance for materials and specifications were required for verification with original specifications.

A stress report was not originally required. However, a detailed stress report has since been prepared. A summary of this report is presented in Section A3.0.

b. Specification for Repair Procedures and Acceptance Criteria

Repair procedures and acceptance criteria for repair procedures were not specified originally.

Weld repairs and inspections will be performed in accordance with the applicable requirements of ANSI N14.6-1978 and ASME Section XI. Should pins, bolts, or other fasteners need repair, they will be replaced in lieu of repair. The replacement parts will be procured in accordance with the original or equivalent requirements for material and nondestructive testing.

c. Preparation of a Critical Items List

The preparation of a critical items list was not originally required. However, two such lists have since been prepared for each of the two lift rigs. These lists include the material identification, and the applicable volumetric and surface inspections that were performed in the fabrication of these special lifting devices. In some instances, nondestructive testing was not specified since the actual stresses are low compared to the strength of the material.

The material selection for most critical load path items was made to ASTM, ASME, or special material requirements. The material requirements were supplemented by Westinghouse-imposed nondestructive testing and/or special heat treatment requirements for almost all of the critical items. Westinghouse required all welding, welders, and weld procedures to be in accordance with ASME Boiler and Pressure Vessel Code, Section IX, for carbon steel welds. Westinghouse required a certificate or letter of compliance that the materials and processes used by the manufacturer were in accordance with the purchase order and drawing requirements. Westinghouse also performed final inspections on these devices and, in some instances, issued quality releases for the internals and head lifting rigs.

A2.2 ANSI N14.6-1978, Section 3.2: Design Criteria

a. Stress Design Factor

This section requires a stress design margin or factor of 3 when compared to yield strength, and 5 when compared to ultimate strength.

The devices were originally designed to the requirement that the stress design factors, when compared to the ultimate strength, would be at least 5. Thus, the ANSI requirements were not strictly satisfied, especially when these requirements are modified by NUREG-0612, Section 5.1.1(4).

A new stress evaluation of the two devices has been performed. The results of this evaluation and a discussion on the structural adequacy of the critical components have been presented in Section A3.0.

b. Fracture Toughness Design Basis for High Yield-to-Ultimate-Ratio Materials

Fracture toughness requirements for materials with high yield to ultimate strength ratio were not originally specified in the design. However, very few components (a few pins and adaptors) fall into the special category specified in the ANSI standard. Although the fracture toughness was not determined for these components, the material selection was based on excellent fracture toughness characteristics. Also, it can be observed from Table A-3.1 (Item 1 only) and A-3.2 (Items 4, 5, 6, and 27) that the calculated stresses in these items are only a small fraction of their strength. Hence, these components are considered structurally satisfactory and reliable.

c. Drop Weight or Charpy Impact Tests for Load Bearing Members

Although drop weight or Charpy impact tests were not performed for the load bearing members (except for the upper and lower clevises on the Internals Lift Rig), the material selection was based on

excellent fracture toughness. Also, the calculated stresses in the load bearing members are only a small fraction of the ultimate strength of the material, and the rigs are used very infrequently. Thus, the components are considered to be safe against failure resulting from the lack of fracture toughness.

A2.3 ANSI N14.6-1978, Section 3.3: Design Considerations

a. Lamellar Tearing

Lamellar tearing was considered in the design of both rigs. To reduce the possibility of lamellar tearing, a stiffener bolt was added to the sling block body, and nondestructive tests (ultrasonic, magnetic particle, and radiograph) of the base material and assembly welds were required.

b. Corrosion by Decontamination

Corrosion due to decontamination was not specifically addressed since no significant contamination is likely to occur during the life of the plant.

c. Even Distribution of Loads to All Load Bearing Attachments

Even distribution of loads is evident from the design of these rigs. Locking plates, pins, etc., are used throughout these lifting devices to assure even distribution of loads.

d. Position Indicator for Remote Actuating Mechanisms

Remote actuation is used only when engaging the internals rig with the internals, which uses a long-handled tool. The tool depresses a spring-loaded tube and turns the engaging screw into the internals. No specific position indicator was considered necessary; visual differences in the top of the spring-loaded tube would indicate that the internals are engaged.

A2.4 ANSI N14.6-1978, Section 3.4: Design Considerations to Minimize Decontamination Efforts

The configuration of the lifting devices was based on functional requirements and no specific consideration was given to minimize decontamination efforts. However, minimization of decontamination efforts is not considered essential for reliable load handling by the lifting rigs.

A2.5 ANSI N14.6-1978, Sections 3.5 and 3.6: Coatings and Lubricants

Compliance with the requirements listed in Sections 3.5 and 3.6 of ANSI N14.6-1978 are not considered essential for reliable load handling by the lifting rigs.

A2.6 ANSI N14.6-1978, Section 4.1: Fabricator's Responsibilities

This section of the ANSI standard contains specific fabrication requirements for proper quality assurance, document control, deviation control, procedure control, material identification, and certification of compliance. It requires that welding procedures, welders, and welding operators be qualified under ASME Boiler and Pressure Vessel Code, Section IX or AWS Structural Welding Code D1.1.

At the time the lifting rigs were fabricated, a formal fabricator quality assurance program was not required for all items. However, the fabricator's welding procedures and nondestructive testing procedures were reviewed by Westinghouse prior to use. Most of the critical load carrying members required letters of compliance for material requirements. Westinghouse performed certain checks and inspections during various steps of fabrication. Final Westinghouse review included visual, dimensional, procedural, cleanliness, personnel qualification, etc., and in most cases, issuance of a quality release to ensure conformance with drawing requirements. Thus, even though a formal quality assurance program was not required per ANSI requirements, checks and inspections by Westinghouse during fabrication and subsequent load testing assure reliable load handling capability of the devices.

A2.7 ANSI N14.6-1978, Section 4.2: Fabrication Inspector's Responsibilities

Westinghouse Quality Assurance personnel performed in-process and final inspections similar to those required in Section 4.2 of ANSI N14.6-1978.

A2.8 ANSI N14.6-1978, Section 4.3: Fabrication Considerations to Minimize Decontamination and Corrosion

In fabricating the devices, no specific consideration was given to minimize future decontamination and corrosion. However, good fabrication procedures and processes comparable to general industry practice were used, which assures reliable load handling by the devices.

A2.9 ANSI N14.6-1978, Section 5.1: Owners Responsibilities Towards Acceptance Testing, Maintenance, and Assurance of Continued Compliance

a. Verification of the Performance Criteria and, Functional Testing

The ANSI standard requires the owner to verify that the performance criteria have been met by the design specification and functional testing.

Since there was no design specification for these rigs, load testing was performed on the reactor vessel head lift and internals rigs at field assembly. The rigs were 100 percent load tested, and nondestructive testing was conducted on critical welds following the test. The Westinghouse Quality Release is considered an acceptable

alternate to verifying that the criteria for letters of compliance for materials and specifications (required by the Westinghouse drawings and purchasing document) were satisfied.

b. Scheduled Periodic Testing Against Performance Criteria

Maintenance and inspection procedures will require a visual check of critical welds and parts after lifting the load to a limited height, from which an accidental drop would not cause any unacceptable damage. (See also the response to Item 2.3.4.)

c. Procedures

Procedures are being developed for the control of the special lifting devices, outlining their proper use and maintenance and noting any limitations to their use. They will be available for inspection at the site.

d. Load Limit Marking

The load limits and other limitations on the use of the RPV head and internals lift rigs will be specified in their procedures. Since these devices are obviously unique, there is no need to mark them with the weight of the few loads they carry.

e. Record of Required Testing, Maintenance, and Repair

Maintenance procedures will require keeping a detailed history of each rig, including instances of damage, distortion, replacement, and repairs.

A2.10 ANSI N14.6-1978, Section 5.2: Acceptance Testing

This section contains requirements for:

a. An initial load test equal to 150 percent of the maximum load followed by nondestructive testing of critical load bearing parts and welds.

b. The qualification of replacement parts.

After the field assembly, the rigs were subjected to a load test equal to 100 percent of the load, followed by nondestructive testing of the critical welds. This load test, plus the large design margins found in the detailed stress analysis (see Section A3), assure that the rigs are capable of handling the design loads safely.

Replacement parts meeting the original or equivalent requirements will be used.

A2.11 ANSI N14.6-1978, Section 5.3: Testing to Verify Continuing Compliance

This section primarily requires that the lifting rigs be subjected annually either to a load test equal to 150 percent of the maximum load or to dimensional testing, visual inspection, and nondestructive testing of load-carrying welds.

For the reasons indicated below, neither an annual load testing nor a nondestructive testing is considered practical or necessary for the RPV head and internals lift rigs:

- These special lifting devices are used during plant refueling, which is approximately once per year. During plant operation, these special lifting devices are inaccessible since they are permanently installed in the containment. They cannot be removed from the containment unless they are disassembled, and no known purposes exist for disassembly. Load testing to 150 percent of the total weight before each use would require special fixtures, and is impractical to perform.

- Annual load testing to 150 percent load inside containment would increase the probability of the hazard which NUREG-0612 intends to reduce, because the load test would subject the rig to a load higher than it would be subjected during actual load handling. Also, the ANSI specified load test will almost double the number of lifts and the risks associated with them.

- The ANSI requirement of annual load testing is primarily intended to reduce the probability of fatigue failure resulting from yielding and damage during heavy usage, which is common to most devices. Since the RPV head and internals lift rigs are used only once a year, and since the actual stress levels in the critical load bearing members (see Section A3) are low compared to their yield strength, fatigue failure is not considered realistic.

- PGandE is implementing an alternate program for continued testing and maintenance, which meets the intent of NUREG-0612 and ANSI N14.6-1978. At the start of each outage requiring the lifting devices, the program will require a comprehensive visual examination by qualified personnel. This inspection will check all critical load-bearing welds and components for evidence of degradation or cracking. Qualified personnel will also inspect the devices for obvious deformation or cracking before each use of the lifting devices. Finally, the major load-bearing welds and critical areas will be non-destructively examined when the lifting devices are repainted every ten years. This testing interval is justified by the lifting devices' low usage over the ten-year period (only 20 to 30 times).

A2.12 ANSI N14.6-1978, Section 5.4: Maintenance and Repair

This section requires that the repairs and alterations, if needed, be done in accordance with the original requirements and that the defective bolts, studs, and nuts be replaced rather than repaired.

The maintenance procedures will be updated to incorporate the above requirements.

A2.13 ANSI N14.6-1978, Section 5.5: Nondestructive Testing Procedures, Personnel Qualifications, and Acceptance Criteria

This section requires that nondestructive testing and inspection be performed in accordance with the applicable sections of ASME Boiler and Pressure Vessel Code, Section V (Articles 1, 6, 7, 24, and 25) and Section III, Division 1 (paragraphs NF-5340 and NF-5350).

Liquid penetrant, magnetic particle, ultrasonic and radiograph inspections were performed on critical welds in accordance with Westinghouse specifications, or as noted on detailed drawings. The requirements in these specifications and drawing notes meet with the intent of the applicable ASME code requirements.

Additional nondestructive testing is not considered necessary for reasons listed in Section A2.11 above. Should repair of any load bearing weld become necessary, the repaired weld will be tested in accordance with the original or equivalent requirements.

A2.14 ANSI N14.6-1978, Section 6: Special Lifting Devices for Critical Loads

This section requires that lifting devices handling critical loads be designed either as a single-failure-proof system, or have twice the normally required stress design factor.

The RPV head and internals lift rigs were not designed as single-failure-proof systems. However, the computed stress design factors for almost all the critical items are high (see Section B3.0 of this appendix), demonstrating the ability of these two rigs to handle the designated loads safely and reliably.

A3.0 STRESS EVALUATION

Detailed stress analyses of the RPV head lift rig and the internals lift rig were performed, to evaluate the compliance of these two rigs with ANSI N14.6-1978 and NUREG-0612, Section 5.1.1(4). This section presents the method of evaluation, the results, and a discussion on the structural adequacy of the rigs.

A3.1 Evaluation Method

Section 5.1.1(4) of NUREG-0612 requires that the lifting devices be designed to meet the stress design factors (SDF) specified in ANSI N14.6-1978. The NUREG also requires that the computation of SDF be based on the combined maximum static and dynamic loads rather than on the static load alone as required by ANSI.

The dynamic load on the lifting rigs resulting from sudden stopping of the crane hook while lowering the load depends on the hoisting speed, combined stiffness of the crane, wire ropes, lifting devices, and the

static weight of the load. Because of the flexibility of the wire ropes, the applicable dynamic load factor (DLF) is not likely to be much larger than 1.0, especially since the hoisting speed is very low (only 3.8 feet per minute). Based on CMAA 70 criteria, the dynamic load would be 1/2 percent of the load per foot per minute of hoisting speed, but not less than 15 percent of the load. This criterion was used to compute the DLF. Accordingly, a DLF of 1.15 was used.

The stresses in the lifting rig components subjected to combined static and dynamic loads were computed using a conventional structural analysis and strength of materials approach. For the purpose of evaluation against ANSI & NUREG requirements, design margins of safety or stress design factors were computed for each rig component. For shear and tensile stresses, in accordance with Section 3.2.1 of ANSI N14.6-1978, two stress design factors were computed:

$$SDF_y = \frac{S_y}{S} \qquad \text{(Eq. A-3.1)}$$

$$\text{and } SDF_u = \frac{S_u}{S} \qquad \text{(Eq. A-3.2)}$$

where SDF_y = stress design factor corresponding to yield strength;

SDF_u = stress design factor corresponding to ultimate strength;

S_y = yield strength of the material;

S_u = ultimate strength of the material; and

S = computed shear or tensile stress based on combined static and dynamic loads.

For some of the rig components, the critical stress types were bending, bearing, combined tension and bending, or compression, and not shear or tension. For these components, stress design factors were computed on the basis of AISC allowable stress as shown below:

$$SDF_y = C \times \frac{S_a}{S} \text{ or } C \times SI \qquad \text{(Eq. A-3.3)}$$

$$SDF_u = SDF_y \times \frac{S_u}{S_y} \qquad \text{(Eq. A-3.4)}$$

where C = margin of safety inherent in AISC code allowables (a value of $C = 1.6$ was used);

S_a = AISC allowable stress;

S = computed stress;

SI = stress index computed for combined tension and bending based on AISC allowable stresses.

SDF_y, SDF_u, S_y, and S_u are as defined earlier.

For rig components subjected to bearing, combined tension and bending, and axial compression, Equations A-3.3 and A-3.4 present an appropriate method of computing the margin of safety or stress design factor.

A3.2 Results and Discussion

The computed stresses (for combined static and dynamic loads) and the stress index factors for the RPV head and internals lift rigs are presented in Tables A-3.1 and A-3.2, respectively. The allowable stresses based on AISC specification are also listed in these tables. It is observed from these tables that:

a. For every component of the two rigs, the stresses resulting from the combined static and dynamic loads are less than the AISC allowable stresses.

b. Except in very few components, the computed stresses are only a small fraction of the yield or ultimate strength of the material.

c. For most of the components, the stress design factor requirements of ANSI N14.6-1978, Section 3.2.1 are satisfied. For a few of the components, the stiffer requirements of Section 6.0 are also satisfied.

Even though not all of the rig components are in complete compliance with the stress design factor requirements of ANSI N14.6-1978, the rigs are considered structurally safe and reliable, for the following reasons:

(i) The computed stresses are, in general, well within AISC allowable stresses.

(ii) After the field assembly, the rigs were fully load-tested. Subsequent visual and nondestructive examination did not reveal any signs of cracking, damage, or yielding in any component or weld.

(iii) No significant deterioration of the load carrying capacity of the rigs is anticipated with continued use, since the stresses are, in general, only a small fraction of the ultimate strength, and the rigs are very infrequently used. This eliminates the concern about the fatigue failure observed in heavily used rigs.

(iv) The requirement of thorough visual inspection following the initial lift before moving to the full lift height reduces significantly the probability of large, unacceptable drops.

(v) The very high design margins required by the ANSI standard (as high as 10) are not considered essential for safe load handling. In fact, providing a uniform design margin in excess of, say, 2.0 (the AISC code is based on a design margin of approximately 1.6) does not reduce the structural failure risk significantly, unless abnormal uncertainty exists in the material properties, DLF computation method, or stress analysis method. In the case of these two rigs, none of these parameters are considered to have abnormal uncertainties.

A4.0 CONCLUSION

Item-by-item evaluation of the RPV head and internals lifting devices shows that, in general, the rigs meet the intent of the ANSI N14.6-1978 standard. Some of the operation and maintenance procedures will be modified to comply with ANSI requirements.

The results of the detailed stress evaluation showed that the computed stresses are, in general, well within the AISC allowable stresses, and in many cases, these are only a fraction of the ultimate strength of the material. The stress design factor requirements of ANSI N14.6-1978 are not completely satisfied; nevertheless, for the reasons listed in Section A3.2, the rigs are considered to have safe load handling capability.

TABLE A-3.1
STRESS EVALUATION RESULTS
HEAD LIFT RIG

PART NAME	CRITICAL STRESS TYPE	CALCULATED STRESS S (ksi)	AISC ALLOWABLE STRESS Sa (ksi)	STRESS DESIGN FACTOR WHEN COMPARED TO YIELD	ULTIMATE
6" Dia. Pin	SHEAR	6.6	48.0	18.2	20.5
	BEARING	10.4	108.0	16.6	18.7
	BENDING	27.5	79.2	4.6	5.2
Top Lug	SHEAR	10.4	15.2	3.7	6.7
	BEARING	10.4	34.2	5.3	9.7
	TENSION	10.4	17.1	3.7	6.7
Sling Block Body	TENSION	4.1	18.0	7.3	11.7
Side Lug	SHEAR	6.8	15.2	5.6	10.3
	BEARING	6.8	34.2	8.1	14.8
	TENSION	6.8	17.1	5.6	10.3
5" Dia. Pin	SHEAR	3.5	42.0	30.0	38.6
	BEARING	7.3	94.5	20.7	26.6
	BENDING	12.1	69.3	9.2	11.3
Clevis	SHEAR	6.9	14.4	5.2	10.1
	BEARING	7.3	32.4	7.1	13.8
	TENSION	6.9	16.2	5.2	10.1
Sling Lifting Leg	SHEAR	2.5	14.0	14.0	28.0
	TENSION	7.6	21.0	4.6	9.2
Clevis	SHEAR	6.9	14.4	5.2	10.1
	BEARING	7.3	32.4	7.1	13.8
	TENSION	6.9	16.2	5.2	10.1
5" Dia. Pin	SHEAR	3.5	42.0	30.0	38.6
	BEARING	7.3	94.5	20.7	26.6
	BENDING	12.1	69.3	9.2	11.8
Lug	SHEAR	6.9	15.2	5.5	10.1
	BEARING	6.8	34.2	8.0	14.8
	BENSION	6.9	17.1	5.5	10.1
Arm	COMPRESSION	2.4	19.5	13.0	22.3
	WELD SHEAR	2.2	18.0	13.1	27.3

TABLE A-3.1
STRESS EVALUATION RESULTS
HEAD LIFT RIG

PART NAME	CRITICAL STRESS TYPE	CALCULATED STRESS S (ksi)	AISC ALLOWABLE STRESS Sa (ksi)	STRESS DESIGN FACTOR WHEN COMPARED TO YIELD	ULTIMATE
5" Dia. Pin	SHEAR	3.1	42.0	33.9	43.5
	BEARING	6.7	94.5	22.6	29.0
	BENDING	11.0	69.3	10.1	13.0
Clevis	SHEAR	6.3	14.4	5.7	11.1
	BEARING	6.7	32.4	7.7	15.0
	TENSION	6.3	16.2	5.7	11.1
Lifting Leg	SHEAR	2.7	14.0	13.0	25.9
	TENSION	6.9	21.0	5.1	10.1
Clevis	SHEAR	5.2	14.4	6.9	13.5
	BEARING	8.4	32.4	6.2	12.0
	TENSION	5.2	16.2	6.9	13.5
4" Dia. Pin	SHEAR	5.1	42.0	20.6	26.5
	BEARING	8.4	94.5	18.0	23.1
	BENDING	22.5	69.3	4.9	6.3

TABLE A-3.2
STRESS EVALUATION RESULTS
INTERNALS LIFT RIG

PART NAME	CRITICAL STRESS TYPE	CALCULATED STRESS S (ksi)	AISC ALLOWABLE STRESS Sa (ksi)	STRESS DESIGN FACTOR WHEN COMPARED TO YIELD	ULTIMATE
7-1/2" Dia. Hook Pin	SHEAR	4.2	40.0	23.8	31.0
	BEARING	12.5	90.0	11.5	15.0
	BENDING	13.9	66.0	7.6	9.9
Side Plate	SHEAR	16.1	17.2	2.7	4.5
	BEARING	15.7	38.7	3.9	6.7
	TENSION	12.7	19.4	3.4	5.7
6" Dia. Adaptor Pin	SHEAR	6.7	42.0	15.7	20.1
	BEARING	15.7	94.5	9.6	12.4
	BENDING	27.2	69.3	4.1	5.2
Upper Adaptor	SHEAR	15.8	48.0	7.6	8.5
	BEARING	7.5	108.0	23.0	25.9
	TENSION	17.0	54.0	7.1	7.9
Load Cell	SHEAR	15.8	46.0	7.3	8.9
	TENSION	27.5	69.0	4.2	5.1
Bottom Adaptor	SHEAR	15.8	48.0	7.6	8.5
	BEARING	9.8	108.0	17.6	19.8
	TENSION	18.3	54.0	6.6	7.4
6" Dia. Removable Pin	SHEAR	5.8	42.0	18.1	23.3
	BEARING	9.1	94.5	16.6	21.4
	BENDING	24.4	69.3	4.5	5.8
Top Lug	SHEAR	9.2	15.2	4.1	7.6
	BEARING	9.1	34.2	6.0	11.1
	TENSION	9.2	17.1	4.1	7.6
Support Pipe	TENSION	3.7	21.0	9.5	16.2
Support Plate	TENSION	0.8	22.8	47.5	87.5
Side Lug	SHEAR	2.3	15.2	16.5	30.4
	BEARING	8.6	34.2	6.4	11.7
	TENSION	5.9	17.1	6.4	11.9
4" Dia. Clevis Pin	SHEAR	5.4	44.0	20.4	25.9
	BEARING	8.9	99.0	17.8	22.7
	BENDING	22.3	72.6	5.2	6.6

TABLE A-3.2
STRESS EVALUATION RESULTS
INTERNALS LIFT RIG

PART NAME	CRITICAL STRESS TYPE	CALCULATED STRESS S (ksi)	AISC ALLOWABLE STRESS Sa (ksi)	STRESS DESIGN FACTOR WHEN COMPARED TO YIELD	ULTIMATE
Upper Clevis	SHEAR	8.9	20.0	5.6	9.0
	BEARING	8.6	45.0	8.4	13.4
	TENSION	8.9	22.5	5.6	9.0
Sling Leg	SHEAR	3.8	12.8	8.4	15.8
	TENSION	12.3	19.2	2.6	4.9
Lower Clevis	SHEAR	3.8	20.0	13.2	21.1
	INTERACTION RATIO FOR COMBINED BENDING AND TENSION	0.88	1.0	1.8	2.9
4" Dia. Clevis Bolt	SHEAR	6.4	42.0	16.4	21.1
	BEARING	17.1	94.5	8.8	11.4
	BENDING	9.1	69.3	12.2	15.7
Spreader Leg Assembly	BEARING	13.5	32.4	3.8	6.2
	COMPRESSION	7.5	18.9	4.0	6.5
Backing Block	BEARING	13.5	27.0	3.2	8.0
	COMPRESSION	9.2	18.0	3.1	7.8
End Plate	BEARING	7.5	32.4	6.9	11.1
Spacer	BEARING	17.1	45.0	4.2	5.9
	INTERACTION RATIO FOR COMBINED BENDING AND TENSION	9.995	1.0	1.6	2.3
	WELD SHEAR	2.1	18.0	23.8	33.3
Leg Channels	TENSION	9.9	21.6	3.6	5.9
Brace Plate	WELD SHEAR	5.5	18.0	5.2	10.9
Leg Support Block	SHEAR	6.6	16.0	6.1	9.8
Adaptor	SHEAR	2.6	12.0	11.5	28.8
	TENSION	9.6	18.0	3.1	7.8

TABLE A-3.2
STRESS EVALUATION RESULTS
INTERNALS LIFT RIG

PART NAME	CRITICAL STRESS TYPE	CALCULATED STRESS S (ksi)	AISC ALLOWABLE STRESS Sa (ksi)	STRESS DESIGN FACTOR WHEN COMPARED TO YIELD	ULTIMATE
Outer Tube	SHEAR	6.6	12.0	4.5	11.4
	TENSION	11.0	18.0	2.7	6.8
Guide Sleeve	SHEAR	6.6	12.0	4.5	11.4
	BEARING	19.6	27.0	2.2	5.5
Engaging Screw	SHEAR	7.6	46.0	15.1	18.4
	BEARING	19.6	103.5	8.4	10.3
	TENSION	14.5	69.0	7.9	9.7

APPENDIX B

MINIMUM BURNUPS TO PREVENT CASK DROP CRITICALITY

B1.0 INTRODUCTION

PGandE has conducted neutronic analyses to determine the minimum burnup level at which the multiplication constant (k) of an infinite array of irradiated fuel from DCPP Unit 1 or Unit 2 stored in 2000-ppm borated water at an optimum W/U volume ratio would be less than 0.95. By assuming that the W/U volume ratio is at its optimum value, one demonstrates that accidental dropping of a heavy load does not result in a configuration of the fuel such that k is larger than 0.95.

Two fuel types were analyzed -- one with a 3.5 w/o U-235 enrichment at Beginning-of-Life (BOL) in the reactor, and another with a 2.123 w/o BOL enrichment. The first was chosen to be conservative and to coordinate the analysis with other PGandE licensing activities. The second was chosen to bound the initial enrichment of DCPP Region 1 fuel.

The purpose of the analysis was to determine a burnup level adequate to demonstrate compliance with Criterion II of NUREG 0612, Section 5.1; "Damage to fuel and fuel storage racks based on calculations involving accidental dropping of a postulated heavy load does not result in a configuration of the fuel such that k_{eff} is larger than 0.95."

The conclusions are:

(1) A discharge burnup of 27.9 MWd/kgU or more will ensure compliance with Criterion II of NUREG 0612, Section 5.1 in 2000 ppm borated water at 68°F, provided initial enrichment does not exceed 3.5 w/o U235.

(2) A discharge burnup of 9.2 MWd/kgU or more will ensure compliance with Criterion II of NUREG 0612, Section 5.1 in 2000 ppm borated water at 68°F, provided initial enrichment does not exceed 2.123 w/o U235.

Since the Region 1 fuel for DCPP Unit 1 has a BOL enrichment of 2.097 w/o U235 and a projected (Reference 1) nominal discharge burnup greater than 9.2 MWd/kgU for all assemblies, the analysis demonstrates that there is no chance of a heavy load drop criticality accident with Unit 1 Region 1 discharged fuel assemblies provided the spent fuel pool boration level is maintained at or above 2000 ppm and provided the first cycle of DCPP Unit 1 approaches its nominal burnup.

Since the Region 1 fuel for DCPP Unit 2 has a BOL enrichment of 2.123 w/o U235, and its projected nominal discharge burnups are very close to the Unit 1 burnups, the above conclusion applies equally to Unit 2.

The analysis supporting these conclusions is documented in detail in the following three sections. Section B2 sets forth the initial conditions and assumptions, Section B3 describes the method of analysis, and Section B4 evaluates the analysis results against Criterion II of NUREG 0612, Section 5.1.

B2.0 INITIAL CONDITIONS AND ASSUMPTIONS

- Water/UO_2 (W/U) Volume Ratios: The "as-built" W/U volume ratio for a DCPP 17 x 17 fuel assembly is 1.9249. Other W/U volume ratios that were used during the criticality analysis were 0.55, 0.70, 1.0, 1.35, 2.0 and 4.0.

- Soluble Boron Concentration: The soluble boron concentration for the refueling water and spent fuel pool is 2000 ppm, as specified in Operating Procedure OP-B-7.

- Neutron Poisons in the Fuel: Fission products with a half-life shorter than that of Pm149 (53.1 hours) were assumed to be gone. All others were assumed to remain in the fuel at their shutdown concentrations. Table B-1 lists the fission products in the CASMO library, and their treatment in the reactivity calculations (removed or retained).

- Fuel Enrichment: Two initial fuel enrichments was assumed -- 3.5 and 2.123 w/o U235. The fuel was depleted until the depleted fuel met Criterion II of NUREG 0612, Section 5.1. Table B-2 gives the fissile enrichments at the depletion levels used for the cask drop criticality calculations.

- Reactivity Insertion from Crushing the Fuel in the Spent Fuel Pool: Table B-3 shows the calculated k's due to crushing of the fuel in the spent fuel pool, as a function of the crushed W/U ratio and burnup. For 3.5 w/o U235 fuel the maximum increase in reactivity is .026 at both 25 and 30 MWd/kgU. For 2.123 w/o U235 fuel the maximum increase is .063 at 10 MWd/kgU and .059 at 12.5 MWd/kgU.

- Refueling k_{eff} Value Allowed by Technical Specifications: During refueling, Technical Specification 3.9.1 requires that the more restrictive of the two following reactivity conditions be met in both the reactor and the refueling canal:

  1. $k_{eff} \leq 0.95$, including a 1% delta k/k conservative allowance for uncertainties, or

  2. Boron concentration $\geq$ 2000 ppm, including a 50 ppm conservative allowance for uncertainties.

- Depletion Conditions: Table B-4 specifies the core conditions assumed in the depletion portion of this study. The boron letdown follows Unit 1 projections down to 400 ppm, where it levels off. The coolant temperature is from Unit 2, and the fuel temperature is based on the Unit 2 coolant temperature and thermal power.

B3.0 METHOD OF ANALYSIS

The analysis is based on an infinite array of irradiated fuel assemblies. Fuel assemblies with an initial U235 enrichment of 3.5 w/o were exposed to burnups of 25 and 30 MWd/kgU, and fuel assemblies with an initial U235 enrichment of 2.123 w/o were exposed to burnups of 10 and 12.5 MWd/kgU. Criticality calculations were performed on the burned assemblies at a temperature of 68°F and a boron concentration of 2000 ppm. The water/fuel volume ratio for the assembly was varied by changing the lattice pitch, to simulate fuel rearrangement due to a heavy load drop. Figures B-1 and B-2 plot reactivity versus water/fuel volume ratio at different burnups. The maximum reactivities were read from these figures.

B3.1 Computer Code Employed

All burnup and reactivity calculations were performed with the CASMO-2 (hereafter CASMO) code. CASMO (Cell and Assembly Module) is a multigroup two-dimensional deterministic transport theory code for burnup and reactivity calculations on LWR assemblies or simple pin cells. The code handles a geometry consisting of cylindrical fuel rods of varying composition in a square pitch array, with allowance for burnable absorber rods, water holes, and other features. The code is described thoroughly in Reference 2.

The particular code configuration used for this study (version 03.05.06) was created on September 21, 1982, and is maintained on the UCC computer system by Studsvik of America.

B3.2 Allowance for Calculational Uncertainties

Calculational uncertainties are concentrated in the following areas:

- The infinite array multiplication constant for a specified geometry and composition;
- The isotopic composition of the irradiated fuel;
- The buildup of fission product poisons during depletion;
- The decay of fission product poisons during shutdown.

Physical uncertainties include the fuel's initial enrichment, its density, and its irradiation history. They are treated in Section B3.3.

The CASMO code has been benchmarked (References 3-6) by Studsvik against experimental results from critical facilities and power reactors. The most useful benchmarks for this calculation are the TRX and ESADA cold criticals on uniform lattices, the CX-10 cold criticals simulating close-packed storage of LWR bundles, the post irradiation investigations of burnt fuel from the Yankee and Saxton reactors, and the core follow data for the first three cycles of Ringhals 2 (820 MW(e) Westinghouse PWR) with the CASMO-POLCA code package.

The comparisons included:

- fission rate distributions in the fuel assemblies of different composition and dimensions;
- reactivities for various lattices;
- heavy element isotopic concentrations as a function of burnup;
- boron letdown for an operating PWR.

B3.2.1 Statistical Analysis of CASMO Reactivity Predictions

CASMO predictions for eight TRX (Reference 3), four ESADA (Reference 3), and sixteen CX-10 (Reference 4) criticals were investigated for compatibility with the Diablo Canyon situation. The TRX and CX-10 criticals are fueled with low enrichment UO_2, and the ESADA criticals are fueled with PuO_2 in natural UO_2. All were moderated with light water at 68°F. Additional information about these criticals can be found in References 7 through 10. After careful consideration, the preliminary data base of 28 criticals was shortened to the final data base of 11 criticals shown in Table B-5. The reasons for the eliminations are as follows:

1. The ESADA 20 and 21 experiments were eliminated because they are two region configurations in contrast to the single region model of this analysis. The ESADA configurations were partly UO_2 - 2 w/o PuO_2 with 8 w/o Pu240, and partly UO_2 - 2 w/o PuO_2 with 24 w/o Pu240. There is no obviously correct way to average these compositions to come up with an equivalent one-region composition.

2. All but two of the CX-10 experiments were eliminated because they have wide (one or more pin pitches) gaps between assemblies. Some of these gaps contain only borated water while others contain stainless steel or aluminium sheets spiked with boron. This is incompatible with our analytical model of an infinite array of fuel assemblies separated by narrow gaps.

3. In addition, Core I of the CX-10 series was eliminated because it is identical with Core II but much smaller. Core I had 438 fuel rods arranged as a cylinder, while Core II had nine 14 x 14 assemblies arranged in a 3 x 3 matrix with no gaps between the assemblies. Since Core I is much smaller, the neutron leakage is much greater, so it does not represent the infinite-array, zero-leakage analytical model of this study.

Table B-5 lists the eleven criticals in the final data base, in order of increasing water-to-fissile mass ratio, which was calculated from the reported pin cell parameters. It is seen that k-predicted decreases as WM/FFM increases. In particular, k-predicted is less than one for water-to-fissile mass ratios of 11.74 or less, but greater than or equal to one for all mass ratios of 12.33 or more. Of course, k-measured is almost exactly one in these critical experiments.

Table B-6 lists the water-to-fissile mass ratios used in the DCPP spent fuel pool criticality calculations. They range from 2.81 to 27.03. The mass ratios of the CASMO benchmark experiments range from 5.26 to 20.21, so part of the mass ratio range in Table C-6 is uncovered. The most important part of the water-to-fissile mass ratio range is between that corresponding to the uncrushed W/U value (1.9249), and the area around the maximum k. Figures B-1 and B-2 show that this latter value corresponds to a W/U value of approximately 1.0 for the 3.5 w/o and the 2.123 w/o fuel. Table B-6 can be used to translate this 1.0-1.9249 W/U ratio range to a range of mass ratios; the most important part is then between 5.11 and 13.01. This part of the range is well covered by the experimental data.

To maximize the data base for the uncertainty analysis, all 11 criticals were included in a conservative calculation of a one sided 95/95 upper tolerance limit (UTL) for k-measured minus k-predicted. This was done by calculating eight different UTLs (based on the first 3, 4, ..., 10, 11 data points in the data base) and taking the largest. The results are given in Table B-7. The maximum 95/95 UTL, .012, occurs for the five-point data base. Thus, 0.012 is a conservative one-sided 95/95 upper tolerance limit for the uncertainty in the CASMO reactivity calculations with a known geometry and composition.

B3.2.2 Benchmarks of CASMO Spent Fuel Isotopics

If the analysis were being done with fresh fuel, the tolerance factor calculated in Section B3.2.1 would be adequate. However, because we are employing depleted fuel, we must estimate the uncertainty in the isotopic composition of the fuel at the time of the reactivity calculation.

The depletion model in CASMO has been benchmarked against spent fuel isotopic data obtained from the Yankee Rowe and Saxton reactors. The results are given in Reference 3, Figures 5.1 through 5.3. The overall agreement is good; the calculated Pu239/Pu240 and Pu240/Pu241 ratios are within the range of the experimental results, and the Pu241/Pu242 ratio is slightly overpredicted. This overprediction amounts to about 3 percent at 30 MWd/kgU and results in a small conservatism in k-predicted.

Differences between calculation and experiment in the Saxton benchmarks are within experimental error for U234, U235, and U236. Overall, the agreement is very good for the more important isotopes but not so good for the less important isotopes. The most significant disagreement is the 16% underprediction of Pu242, which is conservative for the SFP

reactivity calculations. The Saxton benchmarks are of limited relevance to Diablo Canyon because the neutron spectrum was much harder than at Diablo Canyon (Reference 12).

The CASMO predictions of Yankee Rowe and Saxton heavy metal isotopics engender confidence in the CASMO depletion calculations, but they do not permit a direct calculation of the uncertainty in our K predictions due to burnup. This is because the results are presented as ratios, so they cannot be used for estimating directly the uncertainty in fissile masses; also, no data were presented on fission product production.

To estimate the uncertainty in CASMO predictions of k due to the combined uncertainties in CASMO predictions of heavy metal isotopics and fission product poisons, we have recourse to Studsvik's benchmark against operating data for Ringhals 2, an 820 MW(e) operating Westinghouse PWR.

Studsvik followed three cycles of operation at Ringhals 2 with the CASMO-POLCA code package. Table B-8 summarizes the boron letdown curve comparisons (Reference 13) for each of the cycles. The maximum difference between measured and predicted critical boron concentrations, from a total of 195 measurements taken over three cycles, is 55 ppm.

Using the rule of thumb that 1 ppm of boron concentration is equivalent to -.01% of reactivity, it follows that 0.0055 bounds the uncertainty in k for the CASMO-POLCA predictions of Ringhals 2. Since core follow codes are normalized at the beginning of each cycle, 0.0055 bounds the uncertainty in k due to the burnup of Ringhals 2. We take this as an estimate of the uncertainty in k due to burnup.

B3.2.3 Uncertainties in the CASMO Predictions of the Decay of Fission Product Poisons After Shutdown

The CASMO code has a fission product chain model with 12 explicit chains and two non-decaying lumped fission products called the slowly saturating lumped fission product and the non-saturating lumped fission product. Fission product decay after shutdown was treated conservatively by ignoring all explicitly represented fission product poisons whose half-lives are shorter than that of Pm149 (53.1 hours), as shown in Table B-1.

By removing all fission products with half-lives shorter than that of Pm149, the reactivity gain produced by the decay of the remaining fission products will be more than offset by the reactivity loss from the decay of Pm149 into Sm149, so the predicted reactivity will not start to increase at some future date.

In summary, the CASMO fission product decay model has been treated in a conservative fashion and no additional allowances for uncertainties are necessary.

B3.3 Physical Uncertainties

Physical uncertainties come from differences between the computer model and what is actually taking place in the core. The major physical uncertainties are the fuel's initial enrichment, its initial density, and its irradiation history; the last includes boron letdown, moderator temperature, fuel temperature, and burnable poison history. They are discussed in the three subsections below.

B3.3.1 Initial Fuel Enrichment

The table below shows the nominal and as-built fuel enrichments for the first three regions of Units 1 and 2.

DCPP Cycle 1 Fuel Enrichments (w/o U-235)

Region	Nominal	Unit 1 As-Built	Unit 2 As-Built
1	2.1	2.097	2.123
2	2.6	2.615	2.605
3	3.1	3.115	3.091

The nominal values are from the Nuclear Design Report (Reference 1), and the as-built values are from the Nuclear Material Transaction Reports for DCPP Units 1 and 2, Cycle 1.

The enrichments selected for this study are 2.123 and 3.50 w/o U-235. 2.123 w/o is the highest as-built enrichment for Region 1 fuel, and 3.50 w/o is the highest enrichment for which PGandE is seeking a license, so the values chosen yield conservative results.

B3.3.2 Initial Fuel Density

The table below shows the nominal and as-built fuel densities for the first three regions of DCPP Units 1 and 2. The standard deviations are based on assemblywise variations within a region.

Assembly Fuel Densities (% of Theoretical)

Region	Nominal	Unit 1 As-Built	Unit 2 As-Built
1	95	94.9 ±0.2	94.7 ±0.1
2	95	94.7 ±0.2	94.7 ±0.3
3	95	94.7 ±0.2	94.6 ±0.2

The nominal value is from the Nuclear Design Report (Reference 1), and the as-built values were calculated from the uranium masses in the Nuclear Material Transaction Reports for DCPP Units 1 and 2, Cycle 1 by assuming nominal dimensions and a U to UO_2 mass ratio of 0.8815. The nominal fuel density of 95 percent of theoretical was used in this study.

This table shows that the average fuel density for each region is within 0.4% of nominal, and that the two-sigma limit for the assembly-wise fuel density is within 0.9% of nominal.

To estimate the effect of fuel density variations on the maximum reactivity of the crushed spent fuel, a fuel density perturbation calculation was performed for 2.15 w/o U-235 fuel at a burnup of 10 MWd/kgU. The perturbation was two percent of 95 percent = 1.9 percent. This perturbation changes the maximum reactivity of the crushed spent fuel less than .001. Since the perturbation used was more than twice the largest observed two-sigma value for DCPP, we conclude that the effect of uncertainty in the as-built fuel density on the uncertainty in the maximum reactivity of the crushed spent fuel is safely bounded by 0.001.

B3.3.3 Irradiation History

The nominal operating conditions for depletion are given in the Nuclear Design Report (Reference 1) for Unit 1, and also in the FSAR. The only irradiation-history uncertainties with a significant effect on the reactivity of spent fuel come from uncertain variations in the boron letdown, the moderator temperature, the fuel temperature, and the amount of burnable poisons. These are discussed in the following paragraphs.

- Uncertainties Due to Boron Letdown History

  Boron letdown history causes uncertainties because the amount of boron in the water affects the flux spectrum, which in turn results in different isotopics due to a change in resonance absorption. More boron in the water leads to a harder spectrum, more plutonium production during depletion, and more reactivity when placed in spent fuel storage.

  To test the effect of boron history on reactivity and isotopics, two CASMO depletion runs were made, with initial enrichment of 2.10 w/o U235. The first run followed the boron letdown curve in the Nuclear Design Report for Diablo Canyon to 12.5 MWd/kgU, then kept the boron level constant at 400 ppm. The second run kept the boron level at a constant 600 ppm. In this second run, branch cases to the boron letdown curve were performed at each time step.

  Table B-9 shows that a constant boron assumption is non-conservative during the early stages of depletion, when the actual boron concentration is higher than the constant level chosen. On the other hand, the constant-level assumption is conservative during the

later stages of depletion, when the actual boron concentration has dropped lower. Therefore, using a boron concentration higher than the actual level is conservative.

The boron letdown curve for this study was taken from Unit 1, which is higher than the Unit 2 letdown curve because its coolant temperature and thermal power are lower. Therefore, the results are realistic for Unit 1 and conservative for Unit 2.

- Uncertainties Due to Moderator Temperature History

The moderator temperature varies axially along the core during normal operation, but this study used the core average temperature to perform the depletion. This is justified because the reactivity differences between average-to-inlet and average-to-outlet core temperatures tend to cancel.

To test the effect of moderator temperature history on reactivity, three CASMO cases were depleted out to 30 MWd/kgU at the inlet (526.9°F), average (577.9°F) and outlet (651.5°F) moderator temperatures. Branch cases to the average moderator temperature from the inlet and outlet were performed at 10.0 and 30.0 MWd/kgU. The k values from the branch cases are compared with the average moderator temperature history case in the following table.

The table shows that the moderator temperature history effect will always be conservative if the hot full power average moderator temperature is less than the value used in the calculations.

Moderator Temperature History Sensitivity
(k_x = reactivity at x MWD/kg)

MDT [°F]	k_{10}	k_{30}
526.9	1.0183	0.8607
577.9(avg.)	1.0202	0.8709
651.5	1.0288	0.9038

The average coolant temperature used in this study is from Unit 2, which is slightly higher than the Unit 1 average coolant temperature (580.6°F vs. 577.9°F). Therefore, the calculations are realistic for Unit 2 and conservative for Unit 1.

- Uncertainties Due to Fuel Temperature History

The fuel temperature varies not only along the assembly but across it, and also changes during depletion due to pellet-clad interaction. Again, this study used the core average fuel temperature for Unit 2, as estimated from the FSAR and Reference 14.

To test the effect of fuel temperature history on reactivity, two CASMO cases were depleted out to 30 MWD/kgU. One case started at a fuel resonance temperature of 1340°F at Beginning of Life (BOL), dropping linearly to 1040°F at 3.0 MWd/kgU, and constant thereafter. The second case kept the fuel resonance temperature constant at 1040°F throughout. The results are summarized in the following table.

Initial Fuel Temperature Sensitivity

Burnup [MWd/kgU]	k(letdown)-k(constant)
3.0	.00036
5.0	.00022
10.0	.00019
25.0	.00016
30.0	.00013

The table shows that the fuel temperature history effect is conservative whenever the fuel depletion temperature used in the analysis exceeds the actual temperature. The fuel depletion temperature letdown used in this study was that of Unit 2, which has a higher fuel depletion temperature than Unit 1 because of its higher reactor power (3411 MWt vs. 3338) and its higher average coolant temperature. Therefore, using the Unit 2 fuel depletion temperature is conservative for Unit 1 and realistic for Unit 2.

- Uncertainties Due to Burnable Poison History Effect

Uncertainties due to Burnable Poison Rod (BPR) history occur because the BPRs change the flux spectrum. This change in spectrum will result in different isotopics due to changes in resonance absorption.

To show this, isotopic values were taken for 2.123 w/o U235 fuel depleted with zero and 24 BPRs. These values are presented in the following table.

BPR Sensitivity
(enrichment = without BPRs + Δ with BPRs)

Burnup [MWd/kgU]	U235 Enrichment [w/o]	Pu-fiss Enrichment [w/o]
0.0	2.123 + 0.0	0.0 + 0.0
10.0	1.250 + .029	.400 + .050
20.0	.721 + .047	.550 + .054

BPRs have a considerable effect on depletion isotopics. The depletion case with the BPRs has more U235 and fissile plutonium than the case without BPRs, at all burnup levels. Therefore, when

the BPRs are removed, the fuel element will be more reactive than if it were depleted without the BPRs. For conservatism, all the depletion cases for the 3.5 w/o fuel were run with the maximum number of BPRs (24). These BPRs were then removed and replaced by water holes in the storage rack calculations. There are no BPRs in the Region 1 fuel; the 2.123 w/o depletion calculations reflected this.

- Total Irradiation History Uncertainties

  Combining the Unit 1 boron letdown history with the Unit 2 average moderator temperature and fuel depletion temperature history produces conservative results for both units. The use of 24 BPRs/-assembly for the 3.5 w/o fuel is also conservative, while no BPRs is realistic for the 2.123 w/o fuel.

  In sum, the combination of irradiation history assumptions is conservative for both units and both fuel types.

B4.0 CONCLUSIONS

Maximum crushed reactivity predictions and uncertainty estimates for infinite arrays of DCPP irradiated fuel in 2000 ppm borated water at 68°F are summarized in Table B-10. Figures B-1 and B-2 show the variation in reactivity (including uncertainty allowances) with changes in the W/U volume ratio. The maximum crushed reactivity at 27.9 MWd/kgU was interpolated from the values at 25 and 30 MWd/kgU; the value at 9.2 MWd/kgU was extrapolated from the values at 10 and 12.5 MWd/kgU.

Criterion II of NUREG-0612, Section 5.1 specifies a maximum crushed reactivity of 0.95 after accounting for uncertainties. We conclude that the minimum burnup required to ensure compliance with this criterion, for a fuel rearrangement accident in 2000 ppm borated water at 68°F, is 27.9 MWd/kgU for fuel with an initial enrichment up to 3.5 w/o U235, and 9.2 MWd/kgU for fuel with an initial enrichment up to 2.123 w/o U235.

B5.0 REFERENCES

1. J. E. Pritchett et al., "The Nuclear Design and Core Physics Characteristics of the Diablo Canyon Unit 1 Nuclear Power Plant Cycle 1" (WCAP-8408, rev. 1), January 1983 (Westinghouse proprietary).

2. Malte Edenius et al., "CASMO-2, A Fuel Assembly Burnup Program, User's Manual" (Studsvik/NR-81/3), March 1981 (Studsvik proprietary).

3. Malte Edenius et al., "CASMO Benchmark Report" (Studsvik/RF-78/6293), March 1978.

4. Malte Edenius et al., "CASMO Benchmarking and ICFM Experience of the CASMO-POLCA Code Package" (Studsvik/K2-78/29), December 1978.

5. Malte Edenius and Goran Wiksell, "Benchmarking of CASMO against the Oskarshamn 1 BWR with Gd Loaded Fuel" (OKG-B67/77), November 1977.

6. Malte Edenius et al., "CASMO Benchmarking for Fuel Rack Geometries," paper presented at CASMO-2 SEMINAR WORKSHOP, McLean, Virginia, August 24-25, 1982.

7. L. E. Strawbridge and R. F. Barry, "Criticality Calculations for Uniform Water - Moderated Lattices," Nuclear Science and Engineering, vol. 23, p. 58 (1965).

8. W. J. Eich, personal communication, EPRI, Palo Alto, CA, 1983.

9. V. O. Uotinen et al, "Lattices of Plutonium - Enriched Rods in Light Water - Part 1: Experimental Results," Nuclear Technology, vol. 15, p. 257, 1972.

10. Gary S. Hoovler, et al., "Critical Experiments Supporting Close Proximity Storage of Power Reactor Fuel", "Nuclear Technology, vol. 51, p. 217, 1980.

11. A. H. Bowker and G. J. Lieberman, Engineering Statistics, pp. 309-316, Prentice-Hall, Englewood Cliffs, NJ, 1972.

12. Advanced Recycle Methodology Program, System Documentation, Part I.1, Chapter 3, EPRI, Palo Also, CA, September 1977 (EPRI proprietary).

13. Malte Edenius, personal communication, Studsvik of America, Brookline, MA, 1983.

14. B. M. Rothleder, personal communication, Science Applications, Inc., McLean, VA, 1979.

TABLE B-1

FISSION PRODUCT MODEL FOR
SFP REACTIVITY CALCULATIONS

Isotope	Location of Isotope During Spent Fuel Pool Criticality Calculations
Krypton-83	In Fuel (Stable)
Rhodium-103	In Fuel (Stable)
Rhodium-105	Removed ($t_{\frac{1}{2}}$ = 35.9 hours)
Silver-109	In Fuel (Stable)
Xenon-131	In Fuel (Stable)
Xenon-135	Removed ($t_{\frac{1}{2}}$ = 9.2 hours)
Cesium-133	In Fuel (Stable)
Cesium-134	In Fuel ($t_{\frac{1}{2}}$ = 2.05 years)
Cesium-135	In Fuel ($t_{\frac{1}{2}}$ = 3.0×10^6 years)
Neodymium-143	In Fuel (Stable)
Neodymium-145	In Fuel (Stable)
Promethium-147	In Fuel ($t_{\frac{1}{2}}$ = 2.62 years)
Promethium-148m	In Fuel ($t_{\frac{1}{2}}$ = 42.0 days)
Promethium-148	In Fuel ($t_{\frac{1}{2}}$ = 5.4 days)
Samarium-147	In Fuel ($t_{\frac{1}{2}}$ = 1.05×10^{11} years)
Samarium-149	In Fuel (Stable)
Samarium-150	In Fuel (Stable)
Samarium-151	In Fuel ($t_{\frac{1}{2}}$ = 87.0 years)
Samarium-152	In Fuel (Stable)
Europium-153	In Fuel (Stable)
Europium-154	In Fuel ($t_{\frac{1}{2}}$ = 16.0 years)
Europium-155	In Fuel ($t_{\frac{1}{2}}$ = 1.81 years)
Non-Saturating & Slowly Saturating	In Fuel

TABLE B-2

FISSILE ENRICHMENTS FOR
SFP REACTIVITY CALCULATIONS

Burnup [MWD/kgU]	U235 Enrichment [w/o]	Pu239 Enrichment [w/o]	Pu241 Enrichment [w/o]
0.0	3.500	0.0	0.0
25.0	1.469	0.578	0.111
30.0	1.210	0.597	0.135
0.0	2.123	0.0	0.0
10.0	1.280	0.411	0.040
12.5	1.129	0.447	0.056

Note: w/o means weight of isotope/weight of Uranium at BOL, * 100.

TABLE B-3

MULTIPLICATION FACTORS
AT VARIOUS BURNUPS AND WATER/FUEL VOLUME RATIOS (W/U)

Water/ Fuel Ratio (W/U)	3.5 w/o U235		2.123 w/o U235	
	25.0 MWd/kgU	30.0 MWd/kgU	10.0 MWd/kgU	12.5 MWd/kgU
.55	0.883	0.847	0.884	0.859
.70	0.911	0.875	0.906	0.880
1.00	0.941	0.905	0.918	0.894
1.35	0.946	0.910	0.904	0.881
1.9249 (normal)	0.920	0.885	0.855	0.835
2.00	0.915	0.880	0.848	0.828
4.00	0.762	0.731	0.667	0.652

TABLE B-4

DEPLETION CONDITIONS

Burnup [MWd/kg]	Fuel Temperature [°F]	Coolant Temperature [°F]
0.0	1360	581
0.1	1350	581
0.5	1310	581
1.0	1260	581
2.0	1160	581
3.0	1060	581
5.0	1060	581
7.5	1060	581
10.0	1060	581
12.5	1060	581
15.0	1060	581
20.0	1060	581
25.0	1060	581
30.0	1060	581
35.0	1060	581

TABLE B-5

PIN CELL PARAMETERS FOR SELECTED CASMO BENCHMARKS

LATTICE	Water/ Fissile Mass Ratio	k-predicted	Geometry	Pin Pitch, cm	Clad OD, cm	Pellet Diameter, cm	Pellet Density, g/cm³
ESADA-2	5.26	1.003	SQ	1.7526	1.4351	1.2827	9.55
ESADA-3	7.28	1.006	SQ	1.9050	1.4351	1.2827	9.55
CX-10, II	8.32	1.004	SQ	1.6360	1.2060	1.0300	10.22
TRX-6	11.74	1.001	HEX	1.558	1.1506	0.9728	10.53
TRX-1	12.33	.997	HEX	2.205	1.6916	1.5265	7.53
TRX-7	14.63	1.000	HEX	1.652	1.1506	0.9728	10.53
TRX-4	16.03	.998	HEX	1.558	1.1506	0.9855	7.52
TRX-2	16.15	.999	HEX	2.359	1.6916	1.5265	7.53
TRX-8	19.74	1.000	HEX	1.806	1.1506	0.9728	10.53
TRX-5	19.97	.997	HEX	1.652	1.1506	0.9855	7.52
TRX-3	20.21	.998	HEX	2.512	1.6916	1.5265	7.53

TABLE B-6

WATER-TO-FISSILE MASS RATIOS FOR
SFP REACTIVITY CALCULATIONS

Water-to-Pellet Volume Ratio	3.5 w/o U235		2.123 w/o U235	
	25 MWd/KgU	30 MWd/kgU	10 MWd/kgU	12.5 MWd/kgU
0.55	2.81	3.12	3.50	3.72
0.70	3.58	3.98	4.46	4.73
1.00	5.11	5.68	6.37	6.76
1.35	6.90	7.67	8.60	9.12
1.9249	9.84	10.93	12.26	13.01
2.0	10.22	11.36	12.74	13.51
4.0	20.44	22.71	25.48	27.03

TABLE B-7

ONE SIDED TOLERANCE LIMITS FOR E_k, FROM CASMO BENCHMARKS

k-Predicted	Cumulative Mean of k-Predicted	Standard Deviation of k-Predicted	95/95 Tolerance Factor (Ref. 11)	Upper One-sided Tolerance Limit (E_k,95/95)
1.003	1.00300			
1.006	1.00450	0.00212		
1.004	1.00433	0.00153	7.655	0.00738
1.001	1.00350	0.00208	5.145	0.00720
.997	1.00220	0.00342	4.202	0.01217
1.000	1.00183	0.00319	3.707	0.01000
.998	1.00129	0.00325	3.399	0.00976
.999	1.00100	0.00312	3.188	0.00895
1.000	1.00089	0.00293	3.031	0.00799
.997	1.00050	0.00303	2.911	0.00832
.998	1.00027	0.00297	2.815	0.00809

Note: E_k = k-measured - k-predicted

TABLE B-8

SUMMARY OF BORON LETDOWN CURVE COMPARISONS
FOR STUDSVIK BENCHMARK OF CASMO-POLCA
AGAINST RINGHALS 2 CYCLES 1-3

Cycle Number	Measured/Predicted Cycle Length [MWd/kgU]	Number of Measurements	Maximum Deviation between Measured and Predicted Critical Boron Concentration
1	14.25/14.0	59	55 ppm
2	8.4/8.5	82	18 ppm
3	7.4/7.1	54	27 ppm

TABLE B-9

EFFECT OF BORON HISTORY ON K AND ISOTOPICS
(2.10 w/o U235 INITIAL ENRICHMENT)

Burnup [MWd/kgU]	Δk	ΔU235 [w/o]	ΔPu-fiss [w/o]
5.0	0.00046	0.0	0.001
10.0	0.00067	0.003	0.002
25.0	-0.00294	-0.001	-0.008
30.0	-0.00387	-0.002	-0.010

Note: "Δ" means the difference between the value calculated from the letdown run and the value calculated from the constant-boron (600 ppm) run.

TABLE B-10

MAXIMUM CRUSHED REACTIVITY PREDICTIONS
AND UNCERTAINTY ESTIMATES

Initial Enrichment [w/o U235]	3.5		2.123	
Discharge Burnup [MWd/kg]	25 (B_1)	30 (B_2)	10 (B_1)	12.5 (B_2)
Predicted k as Estimated	.947	.911	.918	.894
Uncertainties:				
° Static eigenvalue	.012			
° Burnup	.006			
° Fission product decay	<0			
° Initial enrichment	≅0			
° Fuel density	.001			
° Irradiation history	<0			
° Miscellaneous	.005			
Total	.024			
Predicted k, including allowance for uncertainties	.971(k_1)	.935(k_2)	.942(k_1)	.918(k_2)
Burnup to produce k = .950	27.9		9.2	

Note: $B_{.95} = \frac{B_2 - B_1}{k_2 - k_1} * (.95 - k_2) + B_2$

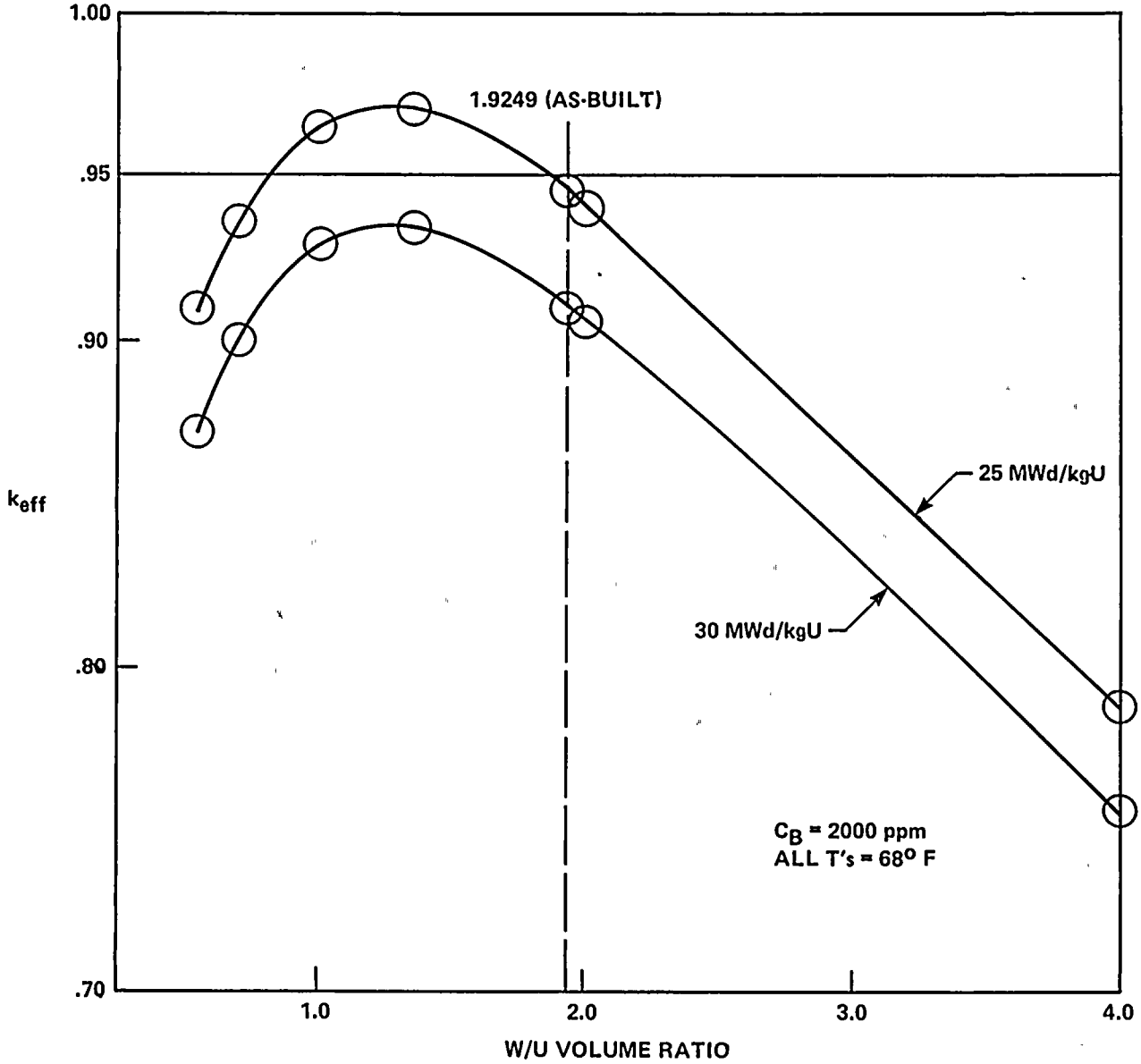

UNIT 2
DIABLO CANYON SITE

FIGURE B-1
REACTIVITY OF CRUSHED 3.5 W/O FUEL (INCLUDING UNCERTAINTY ALLOWANCES)

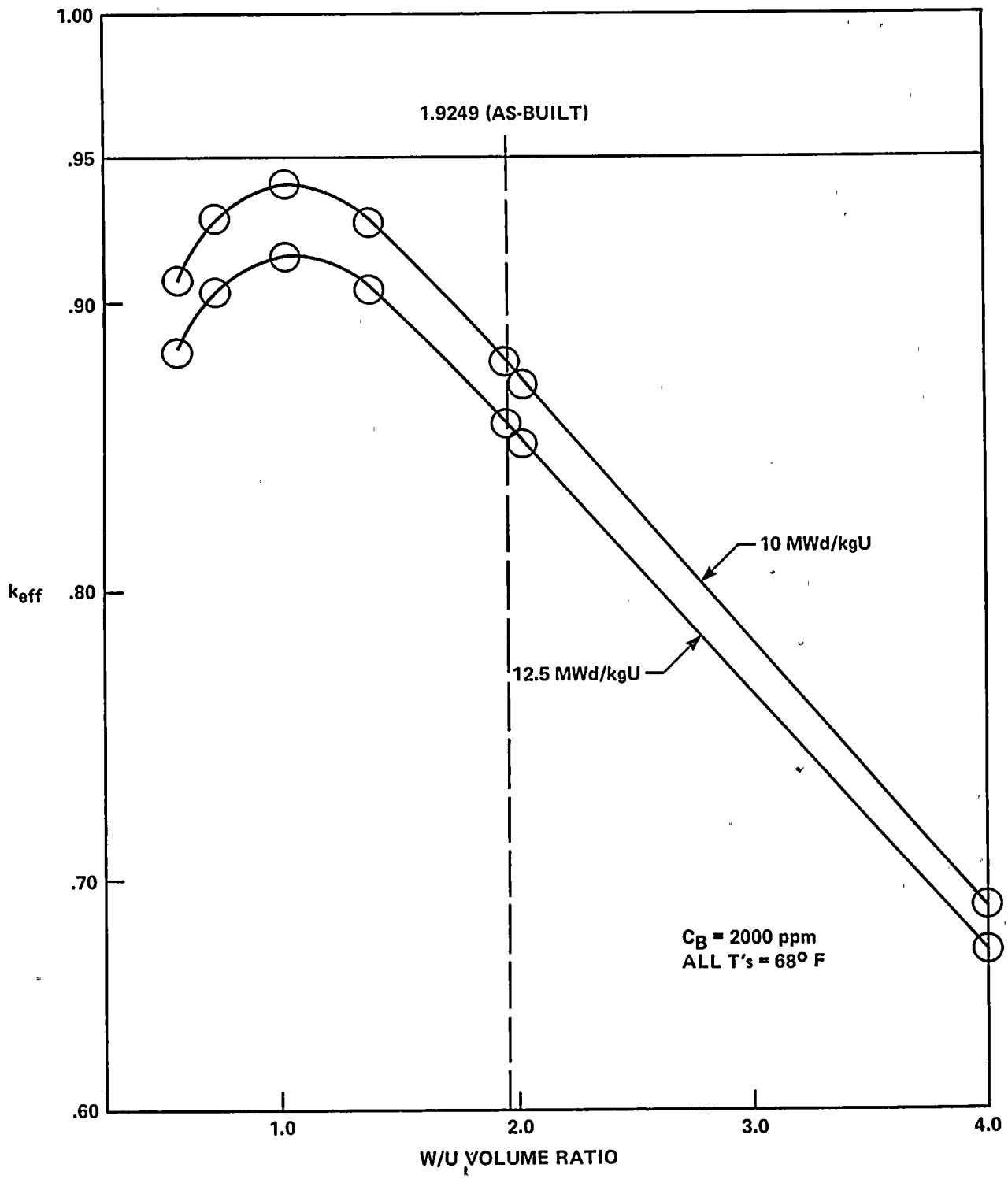

UNIT 2
DIABLO CANYON SITE

FIGURE B-2
REACTIVITY OF CRUSHED 2.123 W/O FUEL (INCLUDING UNCERTAINTY ALLOWANCES)

APPENDIX C

FLOOR STRUCTURAL EVALUATIONS

C1.0 INTRODUCTION

Section 2.4.2.d describes a postulated load drop (the MSR 2-2A tube bundle) whose safe-shutdown consequencies would be unacceptable if the tube bundle were to penetrate the turbine building floors at elevations 119' and 140'. This appendix evaluates the impacted floors, and examines the consequences of such a load drop. This Appendix also shows, by a generic analysis of a load drop onto the turbine building operating deck, that loads weighing up to 5.5 tons can be carried anywhere on the deck up to 12 inches, since dropping them would cause no floor penetration or local damage.

The format for reporting these evaluations is defined in Attachment 4 of Enclosure 3. For each drop evaluation, the attachment requires the presentation of initial conditions, assumptions, method of analysis, and conclusions. That format has been used here, except that the method of analysis has been presented as a common section (Section C2.0), since it is essentially identical for all the evaluations. The initial conditions and assumptions are presented in Tables C-2 and C-3, and the conclusions are presented in Section C3.0.

C2.0 METHOD OF ANALYSIS

Attachment 4 to Enclosure 3 requires that the consequences of postulated load drops be evaluated to demonstrate compliance with Criteria III and IV of NUREG-0612, Section 5.1 (Reference 1). This requirement is satisfied using the following approach:

> If there is an intervening floor or floors between the falling heavy load and the postulated target, and if it can be demonstrated that the drop of the load results in neither the perforation nor the collapse of the floor, and that the drop generates no secondary missiles that could cause unacceptable damage to the target, then Criteria III and IV are satisfied.

Using this basic approach, the consequences of the postulated drops were evaluated in terms of local damage and overall structural collapse. The method of evaluating local damage is described in Section C2.1 below. The method of evaluating the overall structural capability against collapse is described in Section C2.2.

C2.1 Evaluation of Local Damage

Local damage was evaluated by:

a. Determining the minimum thickness of impacted concrete slab needed to preclude back-face spalling and perforation,

b. Determining the minimum thickness of the impacted steel plate needed to preclude perforation,

c. Evaluating the punching shear capacity of the impacted concrete slab.

The thickness of concrete slab at the threshold of spalling (T_{sc}) was determined using a semi-empirical equation developed from test data and published in Reference 2. The minimum thickness of the impacted concrete slab to prevent spalling was then required to be the lesser of 1.25 T_{sc} and T_{sc}+10 inches.

The minimum concrete slab thickness required to preclude perforation (i.e., complete penetration) is always smaller than that required to preclude spalling. Thus, any concrete slab satisfying the above spalling criterion would also satisfy the perforation criteria.

The thickness of steel plate at the threshold of perforation (T_{ps}) was determined using a semi-empirical equation developed from test data reported in Reference 6. The minimum thickness of the impacted steel plate to prevent perforation was then required to be 1.15 T_{ps}. However, for the actual drop cases considered, the actual margin of safety against perforation was computed to be many times higher.

In general, perforation and spalling evaluations were based on the initial area of contact between the heavy load and the impacted slab. In a few cases, while considering inclined impact, the contact area was realistically based on a conservative estimate of either target penetration or local deformation of the heavy load.

According to American Concrete Institute Standard 349-80, Appendix C (Reference 5), an impacted concrete slab does not need to be analyzed for punching shear when the slab thickness is at least 20 percent greater than that required to prevent perforation. Thus, a concrete slab with a thickness equal to or greater than 1.25T_{sc} (which is greater than the required thickness of 1.2T_{sc}) satisfies the punching shear criterion. This approach has become a general practice in the U.S.; it is based on evidence that punching shear failure has not occurred in missile impact tests (Reference 4).

C2.2 Evaluation of Structural Capability Against Collapse

The structural ability of the floor to resist collapse was evaluated using an energy-balance method. The kinetic energy of the falling load to be absorbed by the target structure (KE) was equated to its strain energy capacity (SE), to determine if the target structure could stop the heavy load without exceeding the ductility limits (see Table C-1). KE was computed as:

$$KE = \frac{W^2 * (H+S)}{W + M_e * g}$$

where

W = Weight of dropped load.
H = Drop height.
S = Target displacement at drop location.
g = Acceleration due to gravity.
M_e = Effective target inertial mass.

SE was computed by idealizing the load-deformation characteristics of the floor as elasto-plastic. The load-deformation curve was defined by:

R = Resistance capacity at yield, and
X_e = Yield displacement.

The value of R was assumed to be the smaller of R_s and R_b, which are respectively the shear and the flexural capacity. R_b was computed as the lower bound load at which the target structure would reach the plastic stage because of mechanism formation. R_s was based on reaction shear.

For those load drops onto reinforced concrete slabs in which the flexural strain energy capacity of the slab is smaller than KE, the strain energy absorption capacity of the reinforcements in membrane action (SE_m) was compared to KE. If $SE_m \geq KE$, structural collapse was not predicted, but the consequences of concrete fragments falling from the impacted slab were evaluated.

C3.0 INITIAL CONDITIONS, ASSUMPTIONS, AND CONCLUSIONS

The initial conditions and assumptions for the turbine deck generic case and the postulated MSR 2-2A tube bundle case are presented in Tables C-2 and C-3, using the format provided in Attachment 4 to Enclosure 3.

Based on the results of these evaluations, it is concluded that the floor structures can withstand the drop of the specified heavy loads from the heights indicated, without perforation, collapse, or generation of secondary missiles that could cause unacceptable damage to essential shutdown components. The lift height limitations shown in these Tables will be incorporated into the operating procedures. Thus, Criteria III and IV are satisfied.

C4.0 REFERENCES

1. "Control of Heavy Loads at Nuclear Power Plants"(NUREG-0612), USNRC, 1980.

2. Rotz, J. V., "Results of Missile Impact Tests on Reinforced Concrete Panels," in Second ASCE Specialty Conference on Structural Design of Nuclear Power Plant Facilities, Volume 1A, New Orleans, LA, December 1975.

3. Structural Analysis and Design of Nuclear Power Facilities, (ASCE Manual No. 58), American Society of Civil Engineers, 1980.

4. R. P. Kennedy, Design of Concrete Structures to Resist Missile Impact, North Holland Publishing Company, 1976.

5. "Code Requirements for Nuclear Safety Related Concrete Structures," (ACI Standard 349-80), American Concrete Institute, 1980.

6. Gwaltney, R. C. "Missile Generation and Protection in Light-Water-Cooled Power Reactor Plants"(ORNL NSIC-22), Oak Ridge National Laboratory, 1968.

TABLE C-1

PERMISSIBLE DUCTILITY RATIOS[1]

Member Type and Load Condition	Maximum Allowable Value of μ
A. Reinforced Concrete	
A.1 Flexure:	
a. Beams and one-way slabs[2]	$\frac{0.10}{p-p'} \leq 10$
b. Slabs with two-way reinforcing[2]	$\frac{0.10}{p-p'} \leq 10$ or 30 See Note 5
A.2 Axial compression: Walls and columns	1.3
A.3 Shear, concrete beams and slabs in region controlled by shear:	
a. Shear carried by concrete only	1.3
b. Shear carried by concrete and stirrups	1.6
c. Shear carried completely by stirrups	2.0
d. Shear carried by bent-up bars	3.0
B. Structural Steel	
B.1 Columns and beams with uniform moment[3]	$F_y \frac{14 \times 10^4}{(\frac{KL}{r})^2} + \frac{1}{2} \leq 20$
B.2 Beams with moment gradient	20
B.3 Shear	20
B.4 Axial tension and steel plates in membrane tension[4]	$0.5 \frac{\varepsilon_u}{\varepsilon_y}$

Notes:

1. Based on information contained in Reference 3.

2. p and p' are the positive and and negative reinforcing steel ratios.

3. KL/r is the member slenderness ratio. F_y is the yield stress (ksi).

4. ε_u is the strain at ultimate stress, and ε_y is the yield strain. In lieu of actual test values, ε_u may be taken as the strain corresponding to 50% of ASTM specified minimum elongation.

5. Ductility ratio of greater than 10 can be used if an angular rotation limit per Section C3.4 of Reference 5 is not exceeded.

TABLE C-2

STRUCTURAL EVALUATION OF TURBINE BUILDING FLOOR AT ELEVATION 140' FOR GENERIC LOAD DROP CASES

1. INITIAL CONDITIONS AND ASSUMPTIONS

This evaluation was performed to determine the maximum load that can be safely dropped from the height of 12 inches (or 6 inches) at any point onto the turbine operating deck floor.

a. Weight of Heavy Load: 11,000 lbs. for 12-inch drop
20,000 lbs. for 6-inch drop

b. Impact Area of Load: Area with equivalent diameter of about 4 inches.

c. Drop Height: 12 inches, 6 inches (Limited by Operating Procedures).

d. Drop Location: Any slab panel or steel beam on the Turbine Building Operating Deck floor.

e. Assumptions Regarding Credit Taken in the Analysis for the Action of Impact Limiters: No impact limiters will be used.

f. Thickness of Floor Slab Impacted: 12 inches.

g. Assumptions Regarding Drag Forces Caused by the Environment: No credit was taken for environmental drag forces.

h. Load Combination Considered:

1.0D + 1.0L + 1.0I

where: D = dead load of slab
L = live load on slab
I = impact load

i. Material Properties of Steel and Concrete:

Concrete: f'_c = 5,000 psi

Rebar: f_y = 60,000 psi

Steel Beam: f_y = 36,000 psi

2. METHOD OF ANALYSIS

(See Section 2.0 of this Appendix.)

TABLE C-2 (Cont'd)

3. CONCLUSION

The safety-related components protected by the turbine operating deck floor will not be impaired when any load weighing up to 11,000 lb (20,000 lb) is dropped from a height not exceeding 12 inches (6 inches).

For all of the critical drop locations, the maximum weight that could be safely dropped was governed by the spalling criterion. No perforation is predicted from these drops.

Structural responses of the floor slab at various critical locations when subjected to these two drops were evaluated. An energy balance analysis shows that the strain energy capacity of the slab and beams exceeds the drop energy, precluding structural failure.

TABLE C-3

STRUCTURAL EVALUATION OF TURBINE BUILDING FLOOR
AT ELEVATION 119' FOR MOISTURE SEPARATOR REHEATER
TUBE BUNDLE DROP

1. INITIAL CONDITION AND ASSUMPTIONS

Monorail No. T-119-13 will be used to move the moisture separator reheater (MSR) tube bundle horizontally out of the shell. After removal, the bundle will be lowered and placed on an elevated energy absorbing device such as a layered honeycomb pad or some other equivalent device. The purpose of using an energy absorbing device is to reduce the impact load on the floor structure and to absorb a portion of the impact energy. The tube bundle will be lowered further by gradually reducing the height of the energy absorbing device, till it can be placed on a transportation cart or dolly for eventual removal from the building. After initial lowering of the tube bundle onto the energy absorbing device, till it is moved out of the area using the cart, the bundle will not be lifted more than the predetermined permissible lift heights from the floor. The floor structure has been evaluated assuming several layers of honeycomb pads (total height = 42 inches, crushing strength = 60 psi) under and around the postulated drop location.

This honeycomb device or an equivalent alternate device will be used in the event that the MSR tube bundle needs to be replaced. The floor structure was also evaluated for a postulated drop of the bundle onto the bare floor, in case the drop occurs after the last layer of energy absorber is removed and before the bundle is placed on the transportation cart.

a. Weight of Heavy Load: 29,000 lb.

b. Impact Area of Load:

(i) Onto the energy absorbing device: assumed equal to the interface contact area.

(ii) Onto the bare floor: conservatively assumed concentrated, i.e., zero contact area.

c. Drop Height:

(i) For drop onto the energy absorbing device, maximum drop height = 9 ft.

(ii) For drop onto the bare floor, maximum drop height = 8 inches.

d. Drop Location: Area between Column Lines 20 + 8', 21 + 24', F + 1.5' and F + 5.5'.

e. Assumptions Regarding Credit Taken in the Analysis for the Action of Impact Limiters: Layered honeycomb pads or equivalent will be used, as described above, to absorb a portion of the impact energy and to reduce the impact load on the floor structure.

f. Thickness of Floor Deck Impacted: 0.5-inch thick steel checkered plate floor supported on steel beams.

g. Assumptions Regarding Drag Forces Caused by the Environment: No credit was taken for environmental drag forces.

h. Load Combination Considered:

1.0D + 1.0L + 1.0I

where: D = dead load
L = live load
I = impact load

i. Material Properties of Steel: f_y = 36,000 psi.

2. METHOD OF ANALYSIS

(See Section 2.0 of this Appendix.)

3. CONCLUSION

The safety-related components, protected by the floor at elevation 119', will not be impaired by the drop of the MSR Tube Bundle when energy absorbing honeycomb pads (or equivalent) are used as described in Item 1 of this table, and the lift heights are kept within the limits shown in Item 1C above. Before the MSR tube bundle is replaced, the operating procedure will be updated to incorporate the requirements of placing the honeycomb pads, or an equivalent device, and to incorporate the procedure of lowering the bundle gradually such that predetermined lift height limits are not exceeded.