REGULATORY INFORMATION DISTRIBUTION SYSTEM (RIDS)

ACCESSION NBR:8004220692 DOC.DATE: 80/04/18 NOTARIZED: NO DOCKET #
FACIL:50-275 Diablo Canyon Nuclear Power Plant, Unit 1, Pacific Ga 05000275
50-323 Diablo Canyon Nuclear Power Plant, Unit 2, Pacific Ga 05000323
AUTH.NAME AUTHOR AFFILIATION
CRANE,P.A. Pacific Gas & Electric Co.
RECIP.NAME RECIPIENT AFFILIATION
DENTON,H.R. Office of Nuclear Reactor Regulation

SUBJECT: Reissues Revision 2 to response to NUREG-0578,Also Forwards modified instructions for Revision 2 insertion into manual & eight administrative procedures previously sent to review group.Oversized drawings encl.

DISTRIBUTION CODE: B001B COPIES RECEIVED:LTR 1 ENCL 1 SIZE: 1+50
TITLE: PSAR/FSAR AMDTS and Related Correspondence

NOTES: ADD: M. WILLIAMS L E 1, HANCHER W/1 C/S ALL MAT L

	RECIPIENT ID CODE/NAME	COPIES LTTR	COPIES ENCL	RECIPIENT ID CODE/NAME	COPIES LTTR	COPIES ENCL
ACTION:	05 PM B.BUCKLEY	1	1	AD AD1LWR	1	0
	BC LWRF1	1	0	LA LWRF1	1	0
INTERNAL:	01 REG FILE	1	1	02 NRC PDR	1	1
	06 I & E	3	3	08 OPERA LIC BR	1	1
	09 GEOSCIEN BR	4	4	10 QAB	1	1
	11 MECH ENG BR	1	1	12 STRUC ENG BR	1	1
	13 MATL ENG BR	2	2	15 REAC SYS BR	1	1
	16 ANALYSIS BR	1	1	17 CORE PERF BR	1	1
	18 AUX SYS BR	1	1	19 CONTAIN SYS	1	1
	20 I & C SYS BR	1	1	21 POWER SYS BR	1	1
	22 AD SITE TECH	1	0	26 ACCDNT ANLYS	1	1
	27 EFFL TRT SYS	1	1	28 RAD ASMT BR	1	1
	29 KIRKWOOD	1	1	AD FOR ENG	1	0
	AD PLANT SYS	1	0	AD REAC SAFETY	1	0
	AD SITE ANLYSIS	1	0	DIRECTOR NRR	1	0
	HYDRO-METEOR BR	2	2	MPA	1	0
	OELD	1	0			
EXTERNAL:	03 LPDR	1	1	04 NSIC	1	1
	30 ACRS	10	10			

APR 25 1980

TOTAL NUMBER OF COPIES REQUIRED: LTTR ~~52~~ 55 ENCL ~~41~~ 43

MA 4

PACIFIC GAS AND ELECTRIC COMPANY

PG&E 77 BEALE STREET, 31ST FLOOR • SAN FRANCISCO, CALIFORNIA 94106 • (415) 781-4211

April 18, 1980

Mr. Harold R. Denton, Director
Office of Nuclear Reactor Regulation
U.S. Nuclear Regulatory Commission
Phillips Building
7920 Norfolk Avenue
Bethesda, Maryland 20014

Re: Docket No. 50-275
Docket No. 50-323
Diablo Canyon Units 1 and 2

Dear Mr. Denton:

PGandE is forwarding 20 additional copies of Revision 2 to "Pacific Gas and Electric Company Response to NUREG-0578: Short Term Lessons Learned Requirements" by courier to Mr. Mike Williams at his request. The original Revision 2 copies were received by Mr. Williams in an incomplete condition.

The attached revised instructions have been modified to allow proper entry of Revision 2 into a manual currently updated to Revision 4 (the current revision). In addition, the Rev. 2 pages changed by subsequent revisions have been removed.

The original Rev. 2 instruction sheet has been included for your reference and use.

Eight Administrative Procedures were transmitted to the review group for their review, in the same shipment with the original Rev. 2 submittal. In case these procedures were also missing or incomplete, twenty additional copies are also being included with this shipment.

B001 SE 1/1 ADD'L M WILLIAMS LE 1 1

8004230 692

Kindly acknowledge receipt of this material on the enclosed copy of this letter and return it to me in the enclosed addressed envelope.

Very truly yours,

Philip A. Crane, Jr.

Attachments

REVISED INSTRUCTIONS FOR REVISION 2 REISSUE

INSTRUCTIONS FOR INSERTION OF NUREG-0578 RESPONSE REVISION 2 PAGES

1. Replace the Rev. 0 pages indicated below with Rev. 2 pages:

   III-B-14, III-V-4, III-Z-10, III-AA-1.

2. Replace the Rev. 1 pages indicated below with Rev. 2 pages:

   III-B-5, III-L-4, III-EE-1.

3. Add the Rev. 2 pages indicated below:

   III-Z-11 through III-Z-28, III-AA-2 through III-AA-4,

   III-NN-1 through III-NN-13, III-OO-1 through III-OO-19,

   III-PP-1 through III-PP-6

REVISED INSTRUCTIONS FOR REVISION 2 REISSUE

INSTRUCTIONS FOR INSERTION OF
NUREG-0578 RESPONSE REVISION 2 PAGES

1. Replace the Rev. 0 pages indicated below with Rev. 2 pages:

   I-A-2, III-B-14, III-V-4, III-Z-10, III-AA-1.

2. Replace the Rev. 1 pages indicated below with Rev. 2 pages:

   I-A-1, I-A-3, I-A-4, III-B-5, III-L-4, III-EE-1.

3. Add the Rev. 2 pages indicated below:

   III-Z-11 through III-Z-28, III-AA-2 through III-AA-4,

   III-NN-1 through III-NN-13, III-OO-1 through III-OO-19,

   III-PP-1 through III-PP-6.

heaters be available to each emergency power train within 60 minutes after a blackout. A review of several pressurizer heat loss calculations has resulted in the minimum heater requirements without offsite power of 150 Kw. These capacities will conservatively cover heat losses from the pressurizer at or below normal operating pressure with no allowance for continuous spray. With continuous spray, loss of subcooling would occur between five and six hours. Heater input at any time of 150 Kw as specified above would more than offset the heat loss and allow system pressure to be stabilized at any desired value. Ability to supply emergency power to the heaters within four hours will prevent loss of subcooling in the primary following a loss of offsite power.

All of the equipment associated with pressurizer heater power supply described in this response will be seismically qualified for the Hosgri event except for those devices specifically noted as non-safety grade.

Circuit breakers 52-1G-72 and 52-1H-74 will be added to 480 volt ESF buses 1G and 1H, respectively (see Figure 2.1.1-1). These breakers will be seismically qualified and installed to meet safety-grade requirements. The seismic qualification is based on PG&E's vast testing experience which has previously demonstrated that electromechanical equipment can withstand numerous seismic tests simulating high seismic events without damage and that the equipment will be available to perform its safety function when called upon after the seismic event.

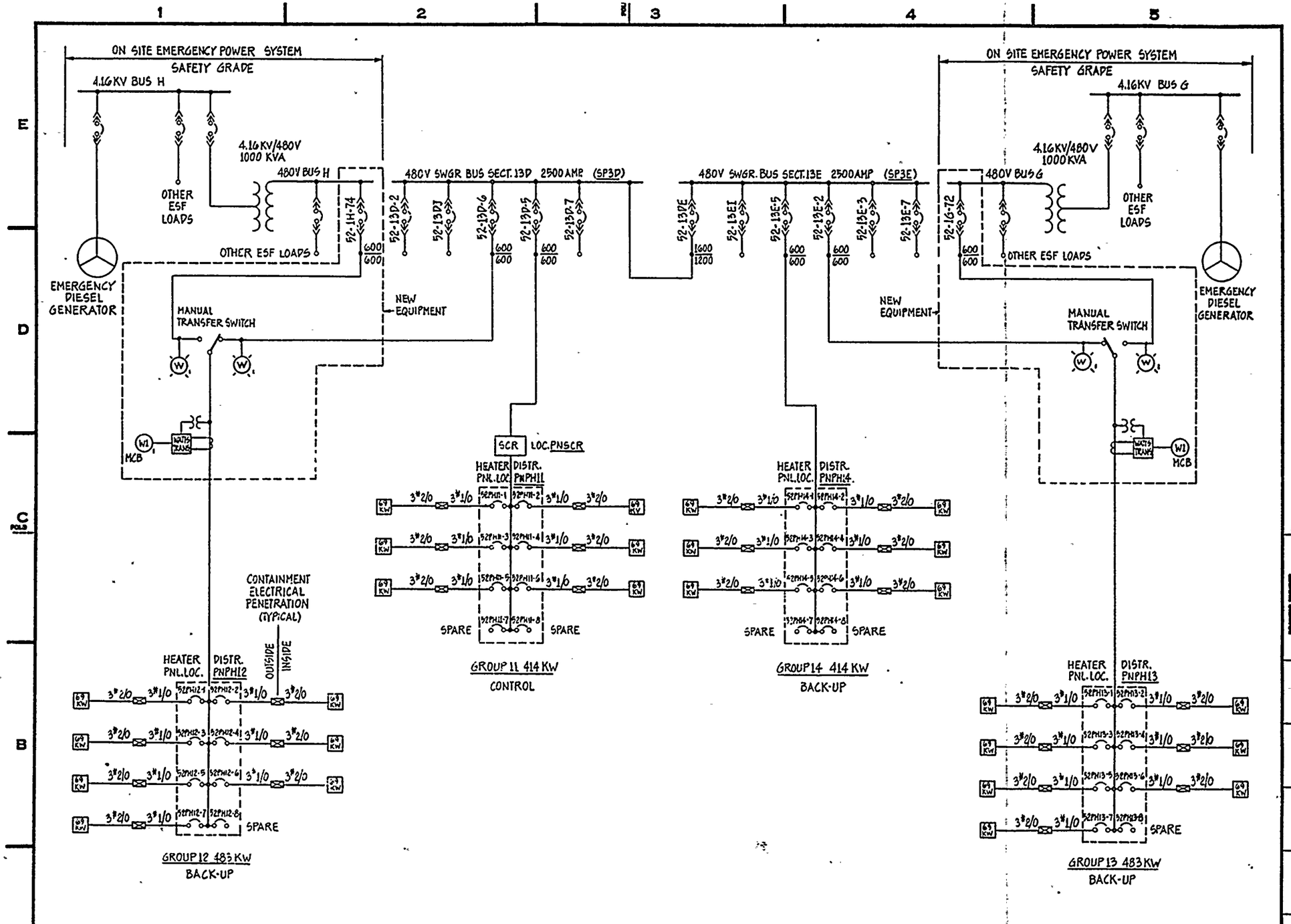

NO.	DATE	DESCRIPTION	GM/SPEC	DWN.	CHKD.	SUPV.	APVD. BY

REVISIONS

APPROVED BY: GM, SUPV., DSGN., DWN., CHKD., O.K., DATE, SCALES

PRESSURIZER HEATERS
SINGLE LINE DIAGRAM
FIG. 2.1.1-1
III - B - 14

PACIFIC GAS AND ELECTRIC COMPANY
SAN FRANCISCO, CALIFORNIA

BILL OF MATL
DWG LIST
SUPSDS
SUPSD BY
SHEET NO. SHEETS
REV.

Revision 2
3/31/80

provide automatic starting sequences after bus transfer either with or without safety injection. Each pump is started by a separate relay or timer from redundant SSPS trains A and B. The motor-driven pumps are also automatically started by trip of both main feedwater pumps.

The turbine driven auxiliary feedwater pump is started by opening steam supply valve FCV-95. As shown on FSAR Figure 7.3-18, this valve is opened by SSPS output relay K632 or K634. Relay K632 initiates for starting on loss of offsite power and relay K634 initiates starting on low-low level in any steam generator. Loss of offsite power is determined by low voltage on the 12kV reactor coolant pump buses. An automatic starting signal is provided by redundant SSPS trains A and B.

The system valves are normally open and require no actions for system operation. The auxiliary feedwater initiation circuitry is part of the Engineered Safety Features (ESF) system, and as such, is installed in accordance with IEEE Standard 279. This standard is referenced in 10 CFR 50.55a(h).

The auxiliary feedwater initiation signals and circuitry are testable. Such testability is included in the surveillance test procedures for the plant as delineated in the Plant Technical Specifications.

PG&E Response and Status

Prior to OL and at annual intervals thereafter, the Vice President - Nuclear Power Generation will issue a management directive that emphasizes the primary management responsibility of the Shift Foreman for safe operation of the plant under all conditions on his shift and that clearly establishes his command duties as defined by the Administrative Procedures described below.

Administrative Procedures are established which define the responsibilities and authorities of the Shift Foreman, and establish lines of succession. However, these procedures will be revised to more explicitly address the Task Force concerns, particularly those dealing with retaining breadth of perspective of operational conditions affecting safety and remaining in the control room under accident conditions to direct control room operational activities. These new provisions, as are all applicable administrative requirements, will be incorporated into the training program for the Shift Foreman.

A list of administrative duties of the Shift Foreman has been provided to the Vice President - Nuclear Power Generation, for his review and action.

A review of the administrative procedures defining the Shift Foreman's (shift supervisor) responsiblities is under way. The review includes the subject of chain of command in the event of temporary absence of the Shift Foreman.

PG&E Response and Status

The permanent onsite technical support center will be located in the Turbine Building buttresses. The design criteria has been formulated. Detailed design is being issued with construction and installation of equipment to be completed by January 1, 1981 as shown on the schedule in Figure 2.2.2.b-1. A complete description of the permanent onsite technical support center is presented below. A discussion of the temporary onsite technical support center follows the discussion of the permanent center. The schedule for the completion of the temporary TSC is shown in Figure 2.2.2.b-2.

PERMANENT TECHNICAL SUPPORT CENTER:

The permanent onsite technical support center (TSC) (common to both units) is located on the upper level of the Unit 2 end of the buttresses on the west side of the turbine building. The floor of the TSC is at elevation +104. Access to the control room is via the east door of the TSC, across the Unit 2 turbine building at elevation +104, and then to the control room at elevation +140 via the elevator or stairway on the east side of the turbine building. It takes approximately three minutes at normal walking speed to go from the TSC, via the stairway, to the control room.

1. Emergency Function:

The principal function of the permanent onsite technical support center (TSC) (once activated) is to serve as the headquarters of the Site Emergency Coordinator, Liaison Coordinator, Evaluations Coordinator and their

staffs throughout an emergency. Provisions have also been made for the establishment of an onsite NRC emergency headquarters in the TSC. The TSC is sized to accommodate a minimum of 20 Company personnel and five NRC personnel. The floor plan of the TSC is shown on Figure 2.2.2.b-3.

It is planned that following activation of the TSC, the overall onsite assessment and recovery programs will be directed from this location. In addition, most communications with offsite locations will be handled through the TSC.

One section of the TSC has been outfitted to serve as a radiological counting room. This facility is intended to be a backup location for this type of work in the event that the normal counting room is unuseable due to high background radiation levels.

2. Habitability Objectives:

The TSC is designed to be habitable throughout the course of a design basis accident. In accordance with NUREG-0578, as clarified on November 9, 1979, the TSC shielding was designed to limit all direct radiation exposure to 10 mRem/hr assuming TID 14844 source terms (from Section 2.1.6.b studies) and to limit all airborne particulate and gaseous exposures (internal to the TSC) to 5 mRem/hr. The total exposure to any individual in the TSC would be limited to less than 15 mRem/hr from a time period beginning one hour after the start of the accident to 30 days later. Over the quarter (3 months)

beginning at the start of the accident this design will assure that personnel inside the TSC, will not receive quarterly doses in excess of those specified in GDC 19 and SRP 6.4.

The TSC is provided with its own ventilation system, shown schematically in Figure 2.2.2.b-4. Both redundant Class I pressurization fans provide the TSC and related HVAC room at a minimum pressure of approximately 1/8" water gage. Both pressurization air and return air (1000 CFM total) are passed through HEPA and charcoal filters. The pressurization air exfiltrates from the TSC to the outside atmosphere. A self contained air conditioning unit is provided for the TSC. The air conditioner is not seismically qualified and is powered from a normal power source. The duct work, ventilation fans and filter units are designed to Seismic Class I criteria.

The laboratory is provided with its own ventilation system, shown schematically in Figure 2.2.2.b-4. One fan provides ventilation air for the lab hood and provides enough pressurization air to maintain the lab and related HVAC room at a minimum pressure of approximately 1/8" water gage. Both lab hood air and pressurization air are passed through HEPA and charcoal filters. The pressurization air exfiltrates from the laboratory to the outside atmosphere. The exhaust air from the hood passes through HEPA and charcoal filters before being discharged to the atmosphere. A self contained

air conditioning unit is provided for the laboratory. The air conditioner is not seismically qualified and is fed from a normal power source. The duct work, ventilation fans and filter units are designed to Seismic Class I criteria.

The normal lighting for the TSC is provided from the emergency AC lighting transformers. Backup DC lights are also provided.

3. Special Equipment:

Provisions are included to permit persons in the TSC to monitor important plant parameters. The output from each Unit's P-250 computer is sent to the TSC using a hard-wired interface to a Harris time-share terminal in the administration building, then to the TSC via acoustic coupler. Figure 2.2.2.b-5 shows the flow of information (plant parameters and health physics data) between the plant process computer, health physics computer, TSC computer and various peripheral equipment. The figure exhibits the capability of the TSC computer to provide all the necessary plant and health physics data to offsite facilities. To provide backup for the plant computer, closed circuit TV cameras are located in the control room in a such a manner that the console, main vertical boards, and the post-accident monitoring panel can be scanned from the TSC.

The TSC is tied into the emergency radiological monitoring network such that one compartment in the TSC is set aside for analytical work. The principal purpose of this facility is to provide minimum onsite analytical capability in the event that the normal facilities in and around access control are unavailable. Multichannel analysis capability similiar to that in the counting room is provided. A thermoluminescent dosimeter reader is also provided. Two radiological emergency kits are stored in the TSC. Contents of these kits are indicated in Table 2.2.2.b-1. Finally, the TSC is provided with a terminal and printer for the Company's computerized records management system. This provides the ability to inspect and print the latest copies of all prints and records involving the plant. Also current hard copies of the most frequently referenced drawings are maintained in the TSC.

4. Communications:

The focal point of communications for the Technical Support Center will be a central communications console located in the computation area. The permanent onsite technical support center (TSC) has been designated 25 CBX lines. This console will house three communication facilities. The first facility, a CBX telephone control center, is called a turret. From this location, all incoming calls can be answered and/or transferred to designated personnel for response. The turret can also be used to obtain an outgoing trunk line for use by the TSC, even if all should be busy, by intercepting the busy line and asking the parties to discontinue their conversation. This turret will normally be shut off except during an emergency. Normal day-to-day operations

will be handled via a similar turret in the plant administration building. The second facility, a telephone answering station, will house those telephone circuits not accessible via the CBX. As shown in Figure 2.2.2.b-6 these circuits are labeled with a "B," "E," or "G" symbol. A "B" symbol represents an extension from the exchange at the PGandE San Luis Obispo exchange. This circuit will provide direct dial communications into PGandE's Los Padres District Service Area, without the need to use one of the eight trunks of the Private Dial System. The "E" circuit automatically rings the party shown upon lifting the handset and depressing the button of the location desired to be called. There will be one button for each dedicated line to the control room, NRC Headquarters, and the Offiste Recovery Center. The "G" symbolizes a standard unlisted telephone from the Pacific Telephone Network. This telephone will provide direct access to an offsite location in the event the Company exchange system is not available. The third facility is for control of the power plant's VHF and UHF radio systems.

TEMPORARY TECHNICAL SUPPORT CENTER:

The administration building located west of the Turbine Building has been designated as a temporary onsite technical support center. This facility, with the addition or extension of some telephone circuits, portable radiation monitors, and the provision of a portable closed circuit television camera, will be functional from June 1, 1980 until the permanent TSC is completed no later than January 1, 1981. Figure 2.2.2.b-7 is a diagram of the layout of the temporary TSC.

Section 2.2.2.b (Continued)

The administration building presently contains a Records Management System terminal providing access to plant design documents and a time share terminal capable of providing output of important plant parameters from each Unit's P-250 computer.

Portable area type radiation monitors with a range of 0.1 to 1,000 millirems per hour with alarms (Model GA-2TO by Nuclear Measurements Corp.) are available onsite. One of these monitors will be placed in the temporary technical support center. Airborne radioactivity concentrations will be monitored with a CAM (constant air monitor) which will be made available for placement in the temporary technical support center.

The closed circuit television system equipment to be located in the permanent technical support center is expected to be onsite by June 1, 1980. It is intented to install the cameras in the control room and to initially install the monitors in the temporary technical support center. However, should delivery be delayed and to provide backup capability a portable television camera would be procured for the temporary technical support center. This camera would be utilized by a camera man in communication with the temporary TSC to scan the control room as requested to provide specific plant parametric information.

Section 2.2.2.b (Continued)

Telephone communication circuits currently exist between the administration building and the control room, the Corporate Incident Response Center in San Francisco, the NRC site office, and the NRC Operations Center in Bethesda. Additional telephone circuit modifications will be made to provide dedicated communications between the temporary TSC and the offsite Emergency Response Center in San Luis Obispo near-site Emergency Operations Center, Control Room, and NRC Operations Center by June 1, 1980.

TABLE 2.2.2.b-1

CONTENTS OF RADIOLOGICAL EMERGENCY KITS

ITEM	QUANTITY 1(MBPP)	2(INF.CTR.)	3(SHRF)	4(DCPP)	5(DCPP)
1. Instruction Binder					
a. Assorted Pens	8	8	8	8	8
b. San Luis Obispo County Map	1	1	1	1	1
c. Equipment Location Dwgs. (sets)	1	1	1	1	1
d. Emergency Environmental Monitoring Field Data Sheet (Form 18-9259)	100	100	100	100	100
e. Appropriate Environmental Monitoring Procedures from Emergency Procedure R-2 (sets)	1	1	1	1	
f. "Emergency Kits" (G.A.6 to Emergency Procedures)	1	1	1	1	1
g. Corporation Key (3A90909)	1	1	1	1	1
h. Pocket Calculator	1	1	1	1	1
2. Monitoring Equipment					
a. Dose Rate Meter	0	1	0	0	0
b. Dose Rate Meter	1	1	1	1	1
c. Survey Meter	1	1	1	1	1
d. Standard G-M Probe	1	1	1	1	1
e. Pancake G-M Probe	1	1	1	1	1
f. Pocket Dosimeters	3	3	3	3	3
g. Dosimeter Charger	1	1	1	1	1
3. Air Sampling Equipment					
a. 12V Air Sampler	1	1	1	0	0
b. 12V Air Sampler (w/battery)	0	0	0	1	1
c. 120V AC Air Sampler	0	1	1	0	0
d. Air Sample Particulate Filters (pkg.)	10	10	10	10	10
e. Iodine Filter Cartridges (pkg.)	3	3	3	3	3

TABLE 2.2.2.b-1 (Continued)

CONTENTS OF RADIOLOGICAL EMERGENCY KITS

ITEM	QUANTITY 1(MBPP)	2(INF.CTR.)	3(SHRF)	4(DCPP)	5(DCPP)
f. Paper Envelopes for Samples	100	100	100	100	100
g. Plastic Envelopes for Iodine Cartridges (pkg. of 30)	1	1	1	1	1
h. Forceps	1	1	1	1	1
i. Compressed Air Cylinder	2	2	2	2	2
j. Sample Head w/adapter to fit Air Cylinder	1	1	1	1	1
k. Air Cylinder Regulator	1	1	1	1	1
4. Protective Clothing/Decontamination					
a. Protective Clothing Sets	2	2	2	2	2
b. Full Face Mask	2	2	2	2	2
c. Type H Ultra Filters for Face Masks	2	2	2	2	2
d. Skin Decontamination Soap	1	1	1	1	1
e. Brush	1	2	1	2	2
f. Paper Towels (pkg)	0	1	0	1	1
g. Smear Pads (pkg of 10)	1	3	1	1	1
h. Plastic Bags	3	3	3	3	3
i. Bucket (10 quart)	0	1	0	1	1
j. Decontamination Agent	1	1	1	1	1
5. Signs/Barriers					
a. Radiation Signs	2	4	2	4	4
b. Radiation Barricade Tape	2	2	2	2	2
6. Sampling Equipment					
a. Sample Bottles	2	6	2	4	4
b. Plastic Bags	15	15	15	15	15
c. Trowel	1	1	1	1	1
d. Gummed Labels (pkg)	1	1	1	1	1

TABLE 2.2.2.b-1 (Continued)

CONTENTS OF RADIOLOGICAL EMERGENCY KITS

ITEM	QUANTITY 1(MBPP)	2(INF.CTR.)	3(SHRF)	4(DCPP)	5(DCPP)
7. Miscellaneous Equipment					
a. First Aid Kit	1	1	1	1	1
b. Screwdriver	1	1	1	1	1
c. Crescent Wrench (8")	1	1	1	1	1
d. Scissors	1	1	1	1	1
e. Stopwatch	1	1	1	1	1
f. Roll of Dimes	1	1	1	1	1
g. Masking Tape	2	2	2	2	2
h. Flashlights w/Batteries	1	2	1	2	2
i. Extra Batteries	2	4	2	4	4
j. Battery Powered Lantern	1	1	1	1	1
k. Bolt Cutter	0	0	0	1	1

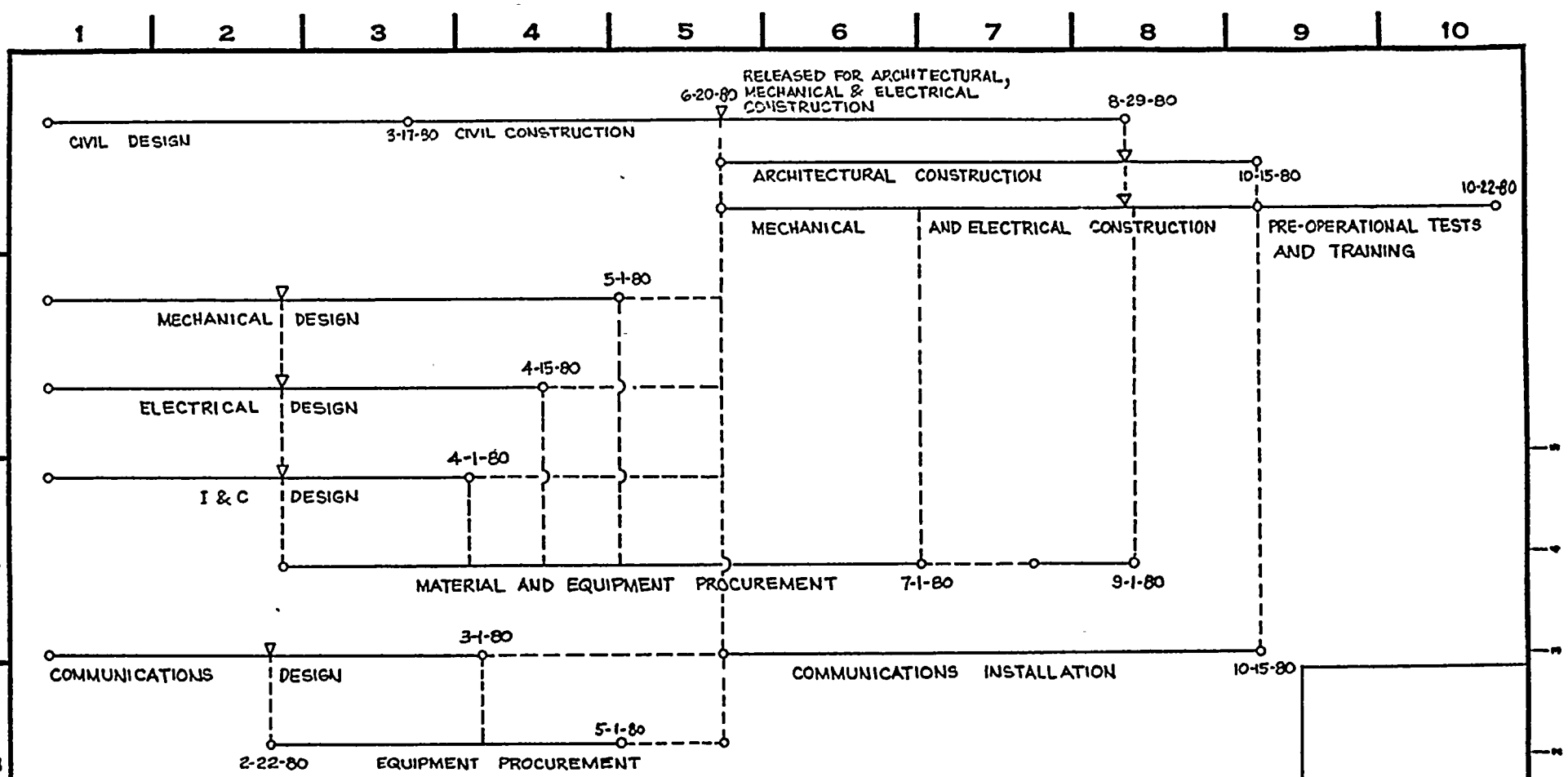

Revision 2
3/31/80

Figure 2.2.2.b-1

NO.	DATE	DESCRIPTION	GM	DWN.	CHKD.	SUPV.	APVD.

REVISIONS

APPROVED BY MRT

GM
SUPV. MRT
DSGN.
DWN. RGB
CHKD.
O.K.
DATE 3-17-80
SCALES N/A

TECHNICAL SUPPORT CENTER
1-1-81 REQUIREMENTS
SUMMARY SCHEDULE

PACIFIC GAS AND ELECTRIC COMPANY
SAN FRANCISCO, CALIFORNIA

MICROFILM
BILL OF MATL
DWG LIST
SUPSDS
SUPSD BY
SHEET NO. 1 OF 1
SHEETS
REV.
SAN-12-001
0

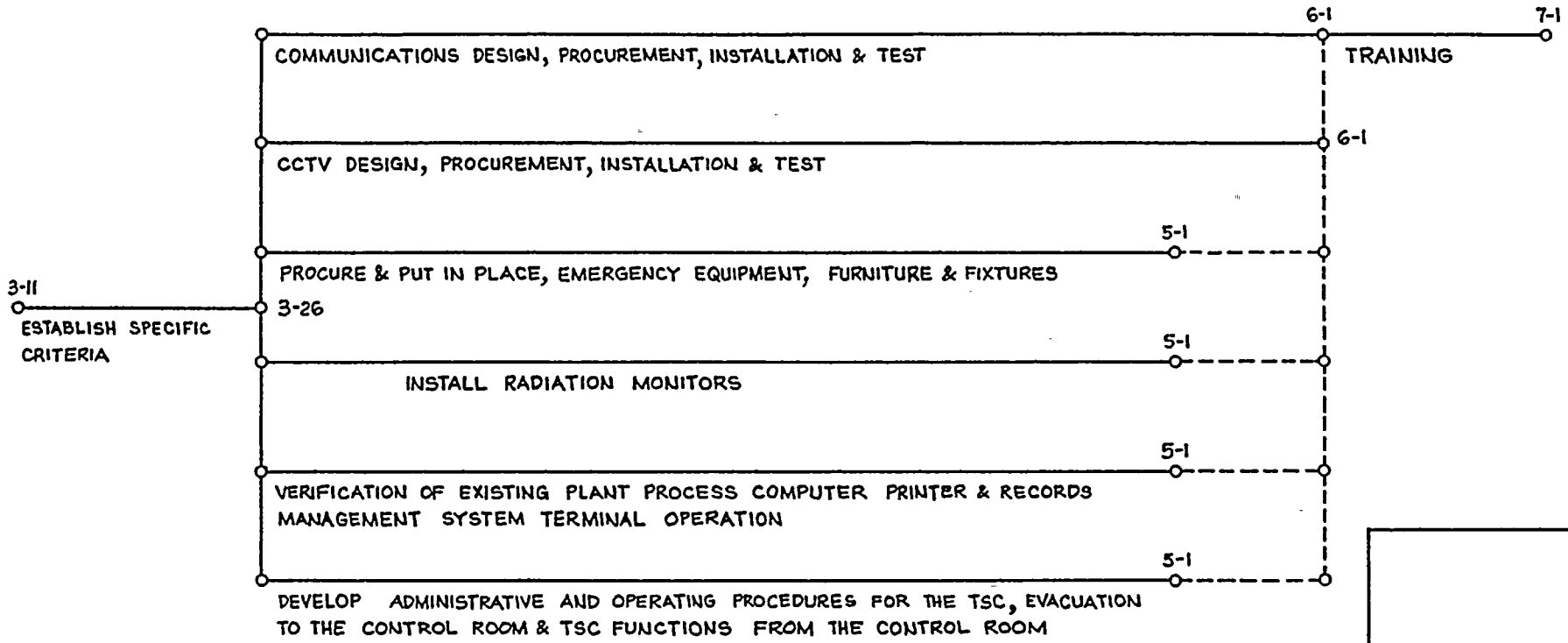

Revision 2
3/31/80

Figure 2.2.2.b-2

NO.	DATE	DESCRIPTION	GM	DWN.	CHKD.	SUPV.	APVD.

REVISIONS

APPROVED BY MRT
GM
SUPV. MRT
DSGN.
DWN. RGB
CHKD.
O.K.
DATE 3-19-80
SCALES N/A

TECHNICAL SUPPORT CENTER
(TEMPORARY)

SUMMARY SCHEDULE
PACIFIC GAS AND ELECTRIC COMPANY
SAN FRANCISCO, CALIFORNIA

MICROFILM
BILL OF MATL.
DWG LIST
SUPSDS
SUPSD BY
SHEET NO. 1 OF 1 SHEETS
SAN-63-001
REV. 0

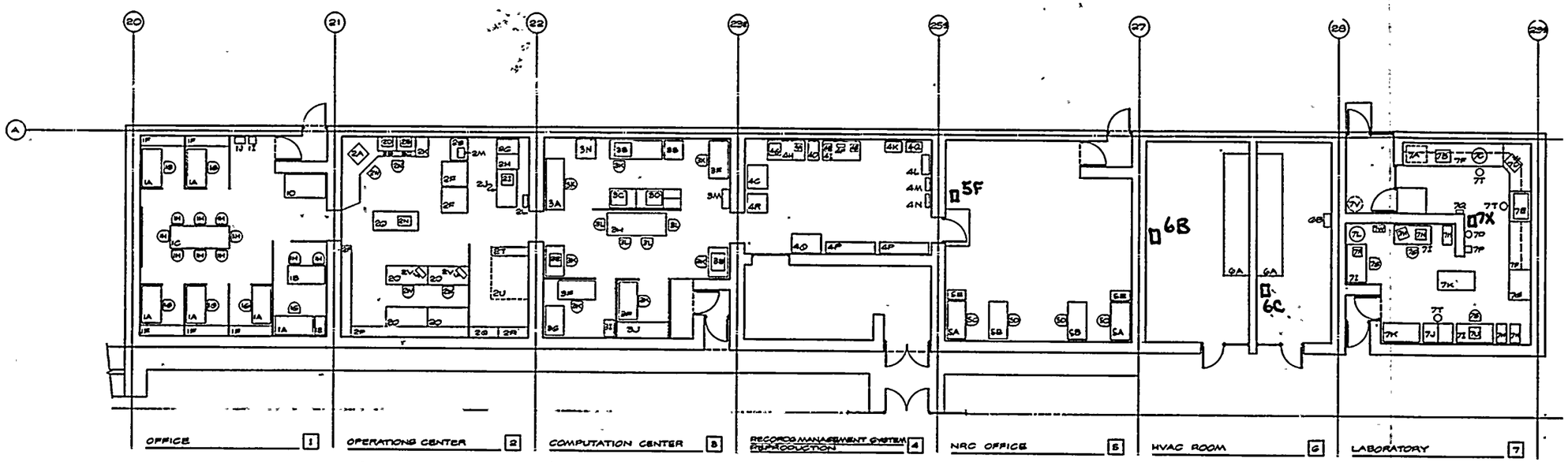

ITEM	QTY.	DESCRIPTION
1A	6	DESK (DOUBLE PEDESTAL W/LOCK)
1B	1	TABLE (2'-6" X 5'-0")
1C	1	TABLE (3'-0" X 8'-0")
1D	1	DRAWING FILE
1E	1	5-DRAWER FILE W/LOCK
1F	5	SIDE-LOAD FILE
1G	6	CHAIR (SWIVEL)
1H	10	CHAIR (GUEST)
1I	1	RADIATION MONITOR
1J	1	TELEPHONE CABING CABINET

ITEM	QTY.	DESCRIPTION
2A	1	CCTV MONITOR
2B	1	P-250 REMOTE CONSOLE
2C	1	PROCESSOR CONTROL CONSOLE
2D	1	P-250 DATA MONITOR
2E	1	OFF-SITE DATA MONITOR
2F	2	PRINTER
2G	1	DISC DRIVE
2H	1	TAPE DRIVE
2I	1	READER
2J	1	PROCESSOR
2K	1	CONSOLE PRINTER
2L	1	RADIATION MONITOR
2M	1	CASSETTE DECK
2N	1	PLOTTER
2O	5	TABLE (2'-6" X 5'-0")
2P	2	BOOKSHELVES
2Q	1	SHELVING FOR SPARE PARTS
2R	1	SHELVING FOR SUPPLIES
2S	1	COMMUNICATION CABINET
2T	1	LATERAL FILE FOR TAPE STORAGE
2U	1	FUTURE DATA LINK EQUIPMENT
2V	2	DATA ACCESS TERMINAL
2W	4	CHAIR (SWIVEL)

ITEM	QTY.	DESCRIPTION
3A	1	COMMUNICATIONS EQUIPMENT
3B	1	COMPUTER
3C	1	LINE PRINTER
3D	1	COLOR GRAPHIC TERMINAL
3E	2	TSO TERMINAL
3F	3	DESK (DOUBLE PEDESTAL W/LOCK)
3G	1	TABLE (2'-6" X 4'-0")
3H	1	TABLE (3'-0" X 8'-0")
3I	1	ADJUSTABLE SHELVING
3J	1	SIDE LOAD FILE
3K	7	CHAIR (SWIVEL)
3L	4	CHAIR (GUEST)
3M	1	HVAC CONTROL & MONITOR PANEL
3N	1	COMMUNICATION CABINET

ITEM	QTY.	DESCRIPTION (RECORDS MANAGEMENT SYSTEMS)
4A	1	CRT TERMINAL
4B	1	CRT TERMINAL
4C	1	WT 150 READER/PRINTER
4D	1	APCO FILE
4E	1	OCE TRI-LENS READER
4F	1	TELEPHONE / COUPLER
4G	1	CAROUSEL
4H	1	DESK (DOUBLE PEDESTAL W/LOCK)
4I	1	TABLE (2'-6" X 5'-0")
4J	2.	CHAIR (SWIVEL)
4K	1	LIGHTING TRANSFORMER
4L	1	480V. AC PANEL
4M	1	120 V. AC LIGHTING PANEL
4N	1	INSTRUMENT AC PANEL
		(REPRODUCTION)
4O	1	XEROX MACHINE
4P	2	OPEN SHELVING W/ADJUSTABLE SHELVES
4Q	1	TELEPHONE CABLING CABINET
4R	1	COMMUNICATION CABINET

ITEM	QTY.	DESCRIPTION
5A	2	DESK (DOUBLE PEDESTAL W/LOCK)
5B	2	TABLE (2'-6" X 5'-0")
5C	2	CHAIR (SWIVEL)
5D	2	CHAIR (GUEST)
5E	2	5-DRAWER FILE W/ LOCK
5F	1	Radiation Monitor

ITEM	QTY.	DESCRIPTION
6A	2	HVAC UNIT
6B	2	AIR PARTICULATE / NOBLE GAS MONITORS
6C	1	AREA MONITOR

ITEM	QTY.	DESCRIPTION
7A	1	SHIELDED STORAGE
7B	1	LEAD SHIELD ON COUNTER
7C	1	TITRATOR
7D	1	SINK (DEMINERALIZED)
7E	1	LAB HOOD
7F	–	COUNTER W/ CABINETS OVER
7G	1	WALL CAGE
7H	3	5-DRAWER FILE W/ LOCK
7I	3	DESK (DOUBLE PEDESTAL W/LOCK)
7J	1	TLD READER
7K	2	TABLE (2'-6" X 5'-0")
7L	1	GAMMA DETECTION SHIELD
7M	1	MCA
7N	1	COMPUTER & DISC
7O	1	EMERGENCY SHOWER
7P	1	EYE WASH
7Q	1	FIRE BLANKET
7R	1	W/K COUNTER
7S	3	CHAIR (SWIVEL)
7T	3	STOOL
7U	1	TI733 TERMINAL
7V	1	ELECTRIC WATER HEATER
7W	1	TELEPHONE CABLING CABINET
7X	1	Radiation Monitor

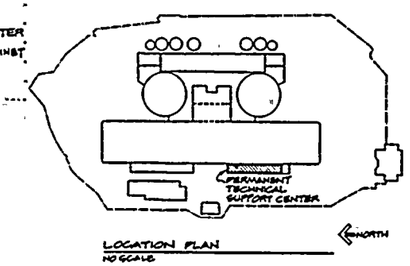

LOCATION PLAN
NO SCALE

0 1 2 4 6 8 10 20
SCALE IN FEET

FLOOR PLAN
TECHNICAL SUPPORT CENTER

MARCH 13, 1980 REV. NO.1

Figure 2.2.2.b-3 Revision 2

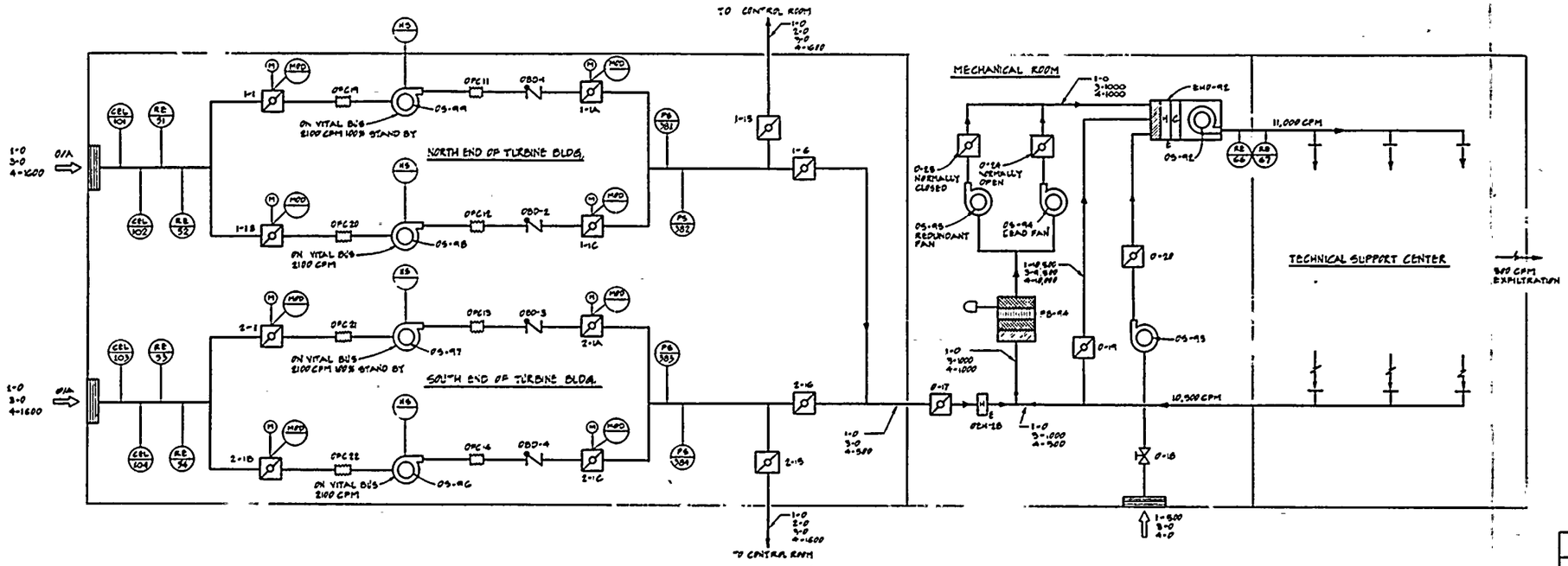

VENTILATION SCHEMATIC-TECHNICAL SUPPORT CENTER

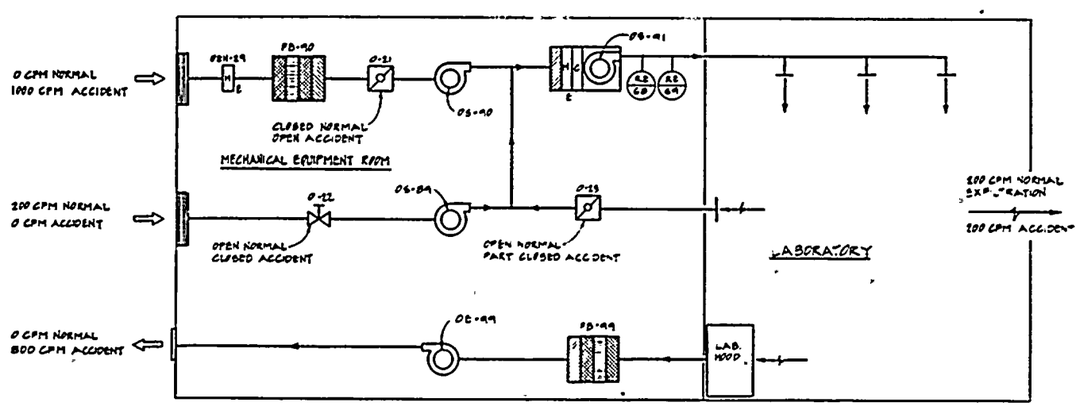

VENTILATION SCHEMATIC-LABORATORY SUPPORT CENTER

MODES OF OPERATION IN TECHNICAL SUPPORT CENTER	
1	99.5% RECIRCULATED AIR OPERATION WITH 4.5% OUTSIDE AIR MAKE UP, 100% AIR THRU ROUGHING FILTER; FOR USE DURING NORMAL OPERATIONS.
2	NOT APPLICABLE
3	100% RECIRCULATION AIR OPERATION WITH 9% AIR THRU HEPA AND CHARCOAL FILTERS; FOR USE IN THE EVENT OF HIGH AIRBORNE RADIOACTIVITY OR HIGH CHLORINE CONCENTRATIONS AT BOTH NORTH & SOUTH OUTSIDE AIR PRESSURIZATION INLETS.
4	10,500 CFM RECIRCULATED AIR OPERATION WITH THE COMBINATION OF 500 CFM PRESSURIZATION AIR AND 500 CFM OF RECIRCULATION AIR FOR A TOTAL OF 1000 CFM THRUGH HEPA AND CARBON FILTERS; FOR USE IN THE EVENT OF AIRBORNE RADIOACTIVITY, NORTH AND SOUTH PRESSURIZATION TRAINS DO NOT OPERATE SIMULTANEOUSLY

NOTE:
FOR PARALLEL CONTROL ROOM MODES OF OPERATION SEE DWG. 9H197

LEGEND

- TWO POSITION ELECTRIC MOTOR OPERATED DAMPER
- OUTSIDE AIR INTAKE
- ROUGHING FILTER
- HEPA FILTER
- CHARCOAL FILTER
- MANUAL HAND SWITCH
- CHLORINE DETECTOR
- RADIATION DETECTOR
- HEATING COIL (E INDICATES ELECTRIC)
- COOLING COIL
- FAN
- BALANCING DAMPER
- FLEXIBLE CONNECTION
- BACK DRAFT DAMPER
- MODES OF OPERATION-AIR VOL IN CFM
- DEFERENTIAL PRESSURE SWITCH
- SMOKE DETECTOR
- POSITIVE SHUT OFF MANUAL DAMPER

Figure 2.2.2.b-4 Revision 2

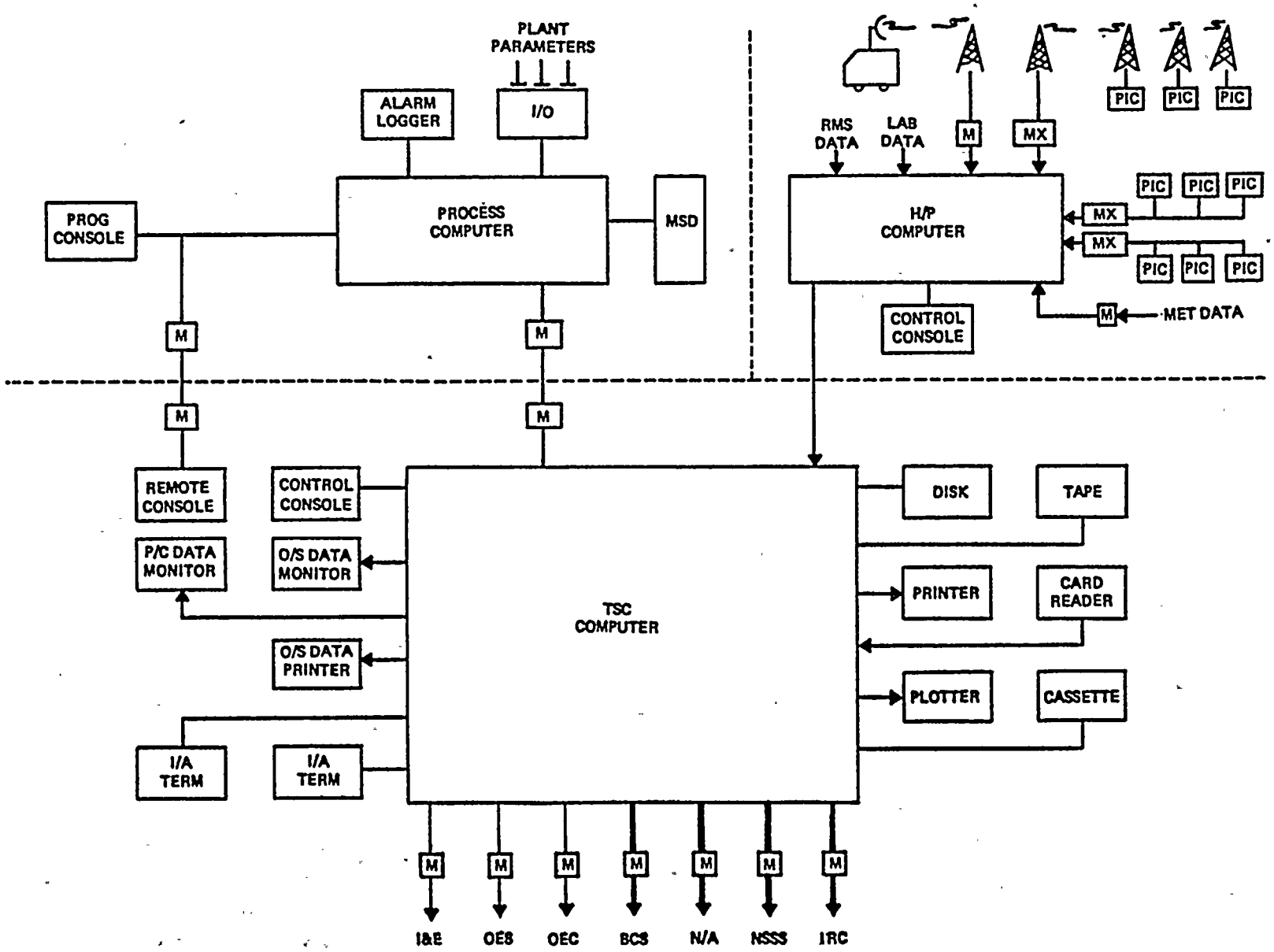

Figure 2.2.2.b-5 Revision 2

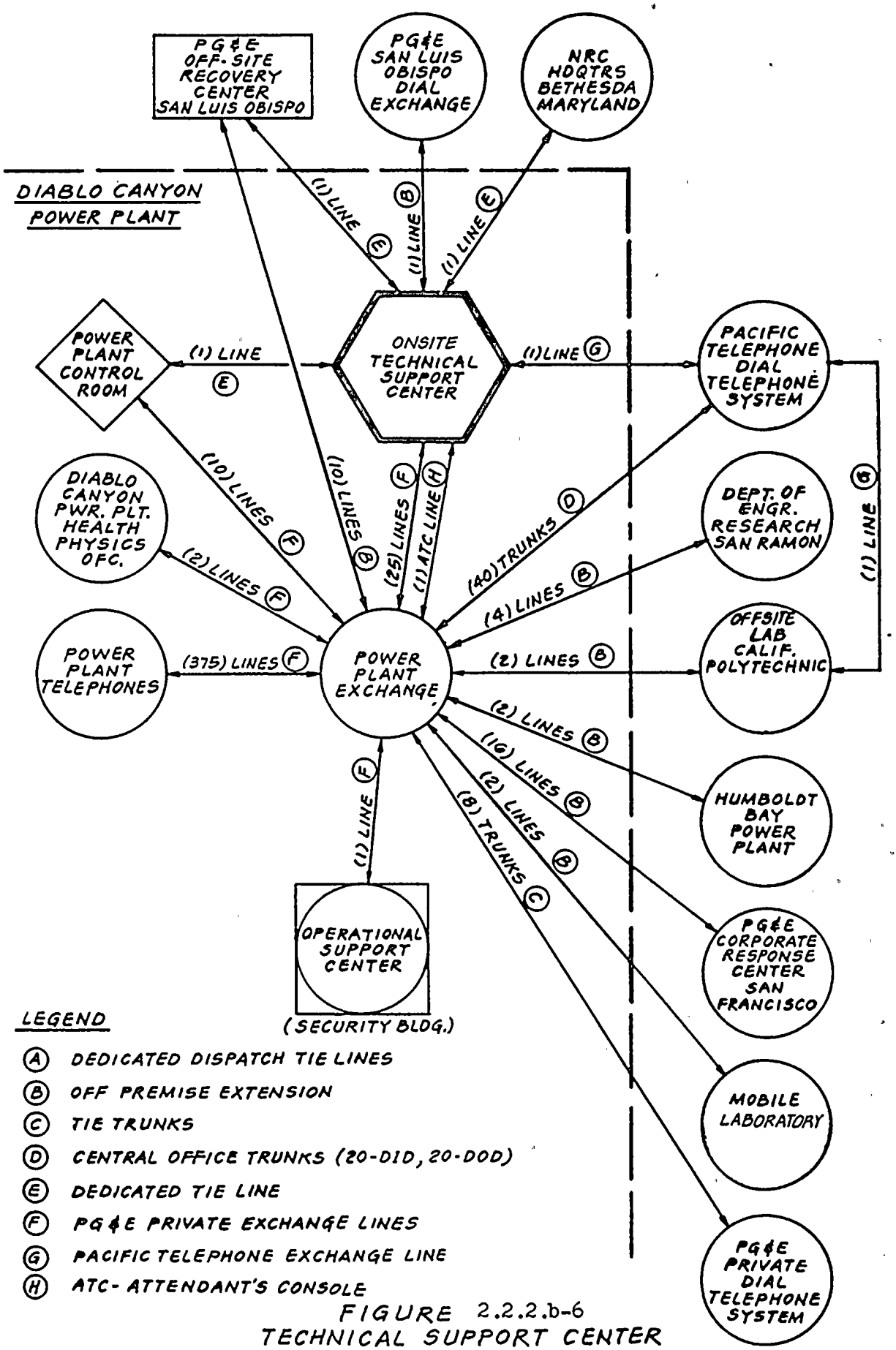

FIGURE 2.2.2.b-6
TECHNICAL SUPPORT CENTER
TELEPHONE COMMUNICATION SYSTEM

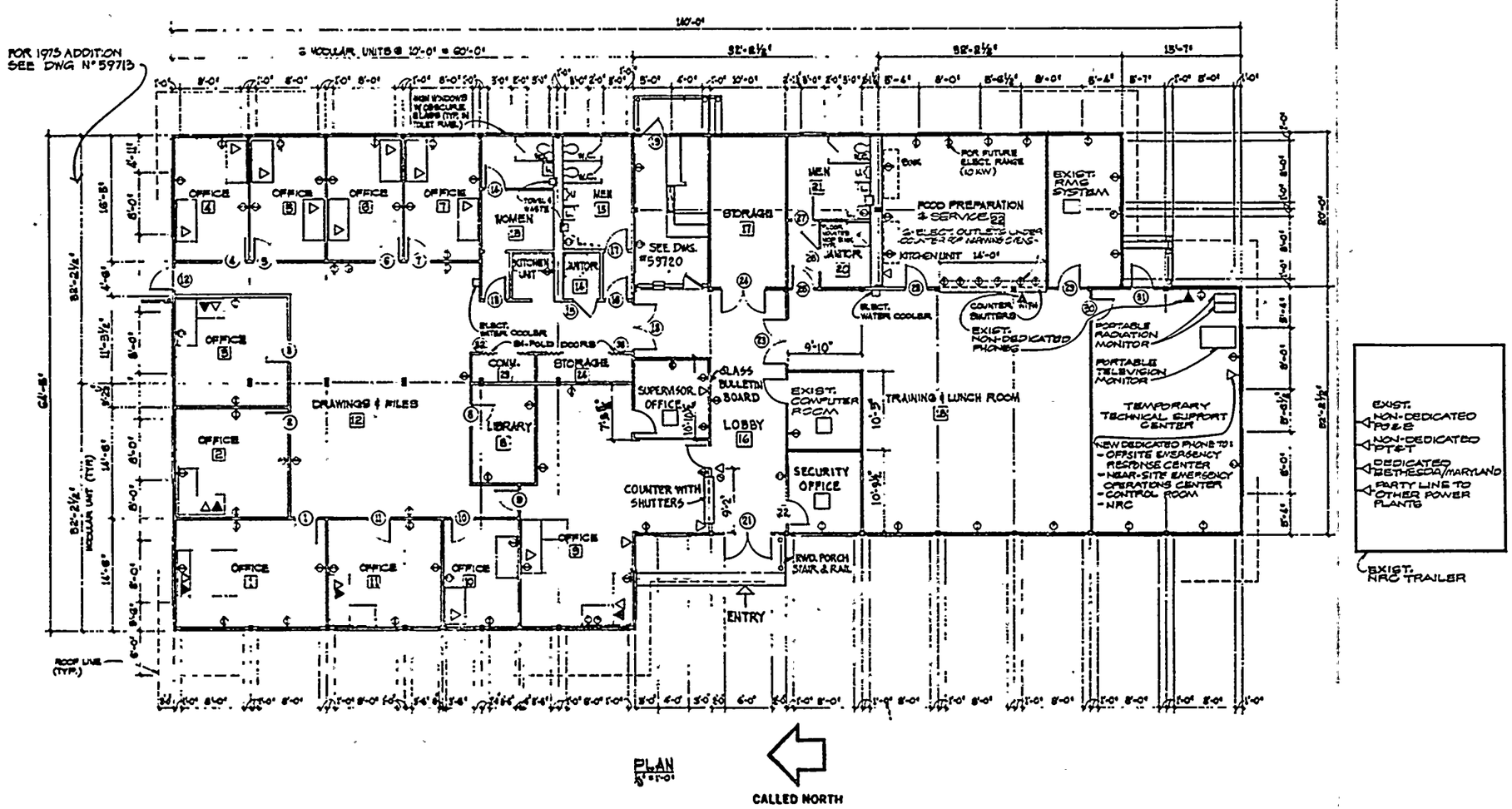

SYMBOLS

- CLOCK OUTLET
- 125V DUPLEX RECEPTACLE
- SPECIAL POWER OUTLET FOR EQUIPMENT
- R.G. & E. TELEPHONE OUTLET BOX
- P.T. & T. TELEPHONE OUTLET BOX

REFERENCE DWG.
SEE DWG. #456092 FOR LOCATION OF BUILDING ON THE SITE.

Figure 2.2.2.b-7 Revision 2

III-Z-27 3/31/80

REVISED REV 3 UNITS 1&2

NO	DATE	DESCRIPTION	GM	BY	CH	APPD
3	5-16-77	SUPERSEDES DWG. #59609		PS	RW	
2	12-1-77	AS BUILT		KKE	AW	
1	11-13-72	APPROVED FOR CONST. (SPEC. 1623)		GLT	AW	
0	9-5-72	ISSUED FOR BIDS (SPEC. 1623)		HD	AW	

TABLE OF CHANGES

TABLE OF CHANGES

APPROVED BY: GM 10/27/1972; DATE BY S. STEINITZ; DSGN.; DR. E.B.; CH. G.J.W.; O.E.-LT | OWB; DATE 6-30-72; SCALE AS NOTED

TEMPORARY ADMINISTRATION BUILDING
REQUIREMENTS
DIABLO CANYON
DEPARTMENT OF ENGINEERING
PACIFIC GAS AND ELECTRIC COMPANY
SAN FRANCISCO, CALIFORNIA

COAST VALLEYS DIVISION

BILL OF MATERIAL
DRAWING LIST
SUPERSEDES 59609
SUPERSEDED BY
SHEET NO. 1 of 1 SHEETS

DRAWING NUMBER 333090 CHANGE 3

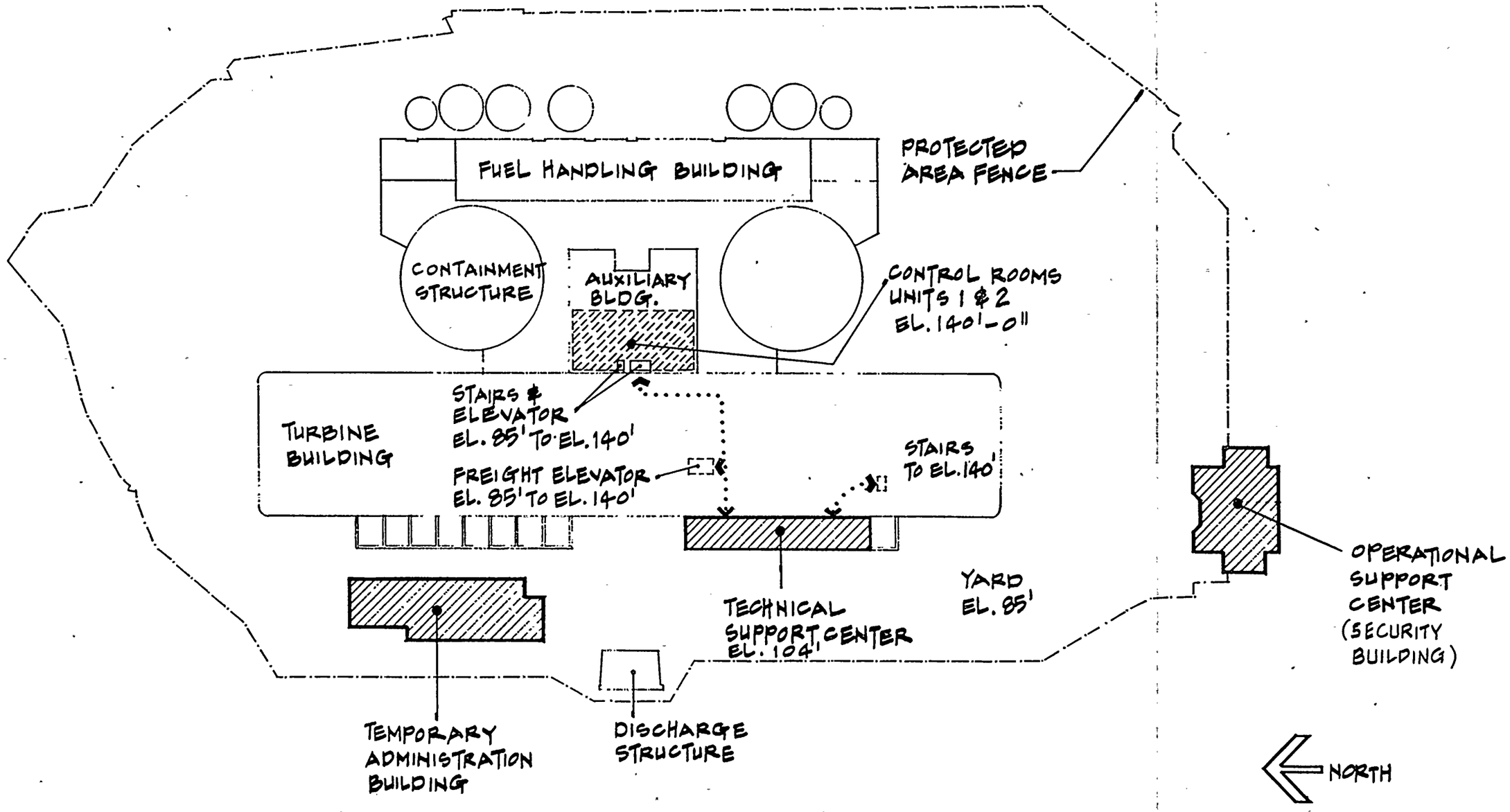

GENERAL SITE PLAN

MARCH 13, 1980 REV. NO 1

Figure 2.2.2.b-8
Revision 2

Section 2.2.2.c - Onsite Operational Support Center

Task Force Position

An area to be designated as the onsite operational support center shall be established. It shall be separate from the control room and shall be the place to which the operations support personnel will report in an emergency situation. Communications with the control room shall be provided. The emergency plan shall be revised to reflect the existence of the center and to establish the methods and lines of communication and management. (Category A: Implementation shall be completed prior to OL, or January 1, 1980, whichever is later.)

PG&E Response and Status

1. Location and Description:

   The security building serves as the onsite Operational Support Center (OSC). The security building is located on the southern perimeter of the Protected Area. The OSC can handle approximately 38 individuals at desks in its nominal 1,600 square feet area. The OSC contains kitchen and lavatory facilities.

2. Emergency Function:

   The OSC serves as a staging area for support personnel who are called to the site to provide support activities. Use of the OSC eliminates unnecessary congestion in the control room and TSC, and enhances the implementation of personnel accountability measures.

3. Special Equipment:

The OSC, located in the Security Building complex, is provided with PG&E and PT&T telephone facilities as well as radio communications. This center will contain one CBX line as indicated on Figure 2.2.2.C-1. The CBX will be programmed to allow the telephone serving the Operation Support Center to have sole access to critical telecommunication lines. This feature insures that the Operational Support Center will be able to maintain an open line with the control room. Two "evacuation kits," containing portable radiological monitoring equipment, and other equipment useful in an evacuation are stored in the OSC. The contents of these kits are listed in Table 2.2.2.C-1.

TABLE 2.2.2.c-1

CONTENTS OF EVACUATION KITS

	ITEM	QUANTITY PER KIT
1.	Survey meter with standard G-M probe	1
2.	Dose rate meter	1
3.	Self reading dosimeter pencils, 0-200 mR range	4
4.	Dosimeter charger	1
5.	Barricade tape, 100 foot rolls	2
6.	Packages of 2" filters (10 filters/pkg)	50
7.	Bullhorn	1
8.	Plastic bag (14"x24")	3
9.	Pens	4
10.	Flashlight	1
11.	Pocket Calculator	1
12.	Corporation key (3A90909)	1
13.	Information Center emergency room key	1
14.	Instruction book with evacuation procedure and data sheets	1

DIABLO CANYON POWER PLANT

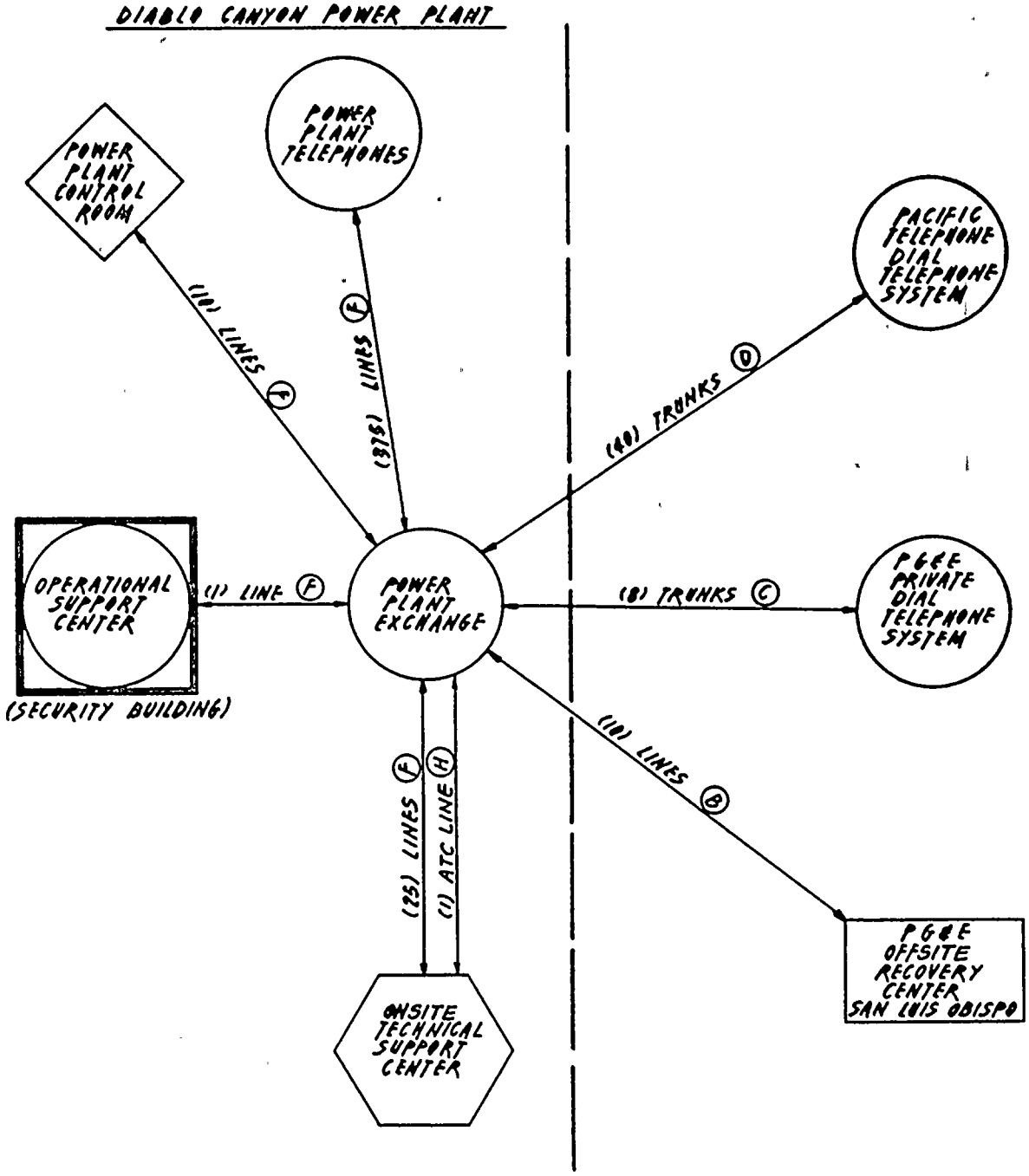

LEGEND:

(A) DEDICATED DISPATCH TIE LINES
(B) OFF PREMISE EXTENSION
(C) TIE TRUNKS
(D) CENTRAL OFFICE TRUNKS (20-DID, 20-DOD)
(E) DEDICATED TIE LINE
(F) PG&E PRIVATE EXCHANGE LINES
(H) ATC-ATTENDANT'S CONSOLE

FIGURE 2.2.2.c-1

OPERATIONAL SUPPORT CENTER TELEPHONE COMMUNICATION SYSTEM (SECURITY BUILDING)

Task I.A.3.1 - Prepare Applicants for New Exams

Position

There will be new scopes for the examinations and criteria for the issuance of reactor operator (RO) and senior reactor operator (SRO) based upon Commission Action on SECY 79-330E. There will be a new category on the operator and senior operator examination dealing with thermodynamics and related subjects. Time limits for applicants to complete the examination will be established. The passing grade will be increased to 80 percent overall with a minimum grade of 70 percent in each category. Senior operators will be required to take oral examinations and the requalification programs will be changed to reflect the new initial requirements for issuance of licenses. The licenses will prepare applicants for new examinations and will develop and implement new examination criteria and lecture schedules for the requalification program.

PG&E Response and Status

PG&E will implement the position as required by the NRC. The implementation will be completed before issuance of the operating license.

Task I.G.1 - Training Requirements During Preoperational and Low-Power Testing

Position

Near-term operating license facilities will be required to develop and implement intensified training exercises during the low power testing programs. Licenses will (1) define training plan prior to loading fuel, and (2) conduct training prior to full-power operation.

PG&E Response and Status

See attached letter from PG&E to NRR of February 7, 1980.