PRIORITY 1
(ACCELERATED RIDS PROCESSING)

REGULATORY INFORMATION DISTRIBUTION SYSTEM (RIDS)

ACCESSION NBR:9503210177 DOC.DATE: 95/03/13 NOTARIZED: YES DOCKET #
FACIL:50-220 Nine Mile Point Nuclear Station, Unit 1, Niagara Powe 05000220
AUTH.NAME AUTHOR AFFILIATION
TERRY,C.D. Niagara Mohawk Power Corp.
RECIP.NAME RECIPIENT AFFILIATION
Document Control Branch (Document Control Desk)

SUBJECT: Submits results of insps of facility core shroud welds H8,H9 & certain vertical welds,per GL 94-03, "IGSCC of Core Shrouds in BWRs."

DISTRIBUTION CODE: A018D COPIES RECEIVED:LTR 1 ENCL 1 SIZE: 36
TITLE: GL 94-03 Intergranular Stress Corrosion Cracking of Core Shrouds in B

NOTES:

	RECIPIENT ID CODE/NAME	COPIES LTTR	COPIES ENCL	RECIPIENT ID CODE/NAME	COPIES LTTR	COPIES ENCL
	PM/BRINKMAN,D.	1	1			
INTERNAL:	FILE CENTER 01	1	1	NRR/DE/EMCB	1	1
	NRR/DE/EMEB	1	1	NRR/DOPS/OECB	1	1
	NRR/DSSA/SRXB	1	1			
EXTERNAL:	NRC PDR	1	1			

P R I O R I T Y 1 D O C U M E N T

NOTE TO ALL "RIDS" RECIPIENTS:
PLEASE HELP US TO REDUCE WASTE! CONTACT THE DOCUMENT CONTROL DESK, ROOM P1-37 (EXT. 504-2083) TO ELIMINATE YOUR NAME FROM DISTRIBUTION LISTS FOR DOCUMENTS YOU DON'T NEED!

TOTAL NUMBER OF COPIES REQUIRED: LTTR 7 ENCL 7

MA4

NIAGARA MOHAWK

NIAGARA MOHAWK POWER CORPORATION/NINE MILE POINT NUCLEAR STATION, P.O. BOX 63, LYCOMING, N.Y.13093 /TEL. (315) 349-7263
FAX (315) 349-4753

CARL D. TERRY
Vice President
Nuclear Engineering

March 13, 1995
NMP1L 0916

U.S. Nuclear Regulatory Commission
Attn: Document Control Desk
Washington, DC 20555

RE: Nine Mile Point Unit 1
Docket No. 50-220
DPR-63

Subject: *Generic Letter 94-03, "Intergranular Stress Corrosion Cracking of Core Shrouds in Boiling Water Reactors" (TAC No. M90102)*

Gentlemen:

Generic Letter 94-03, "Intergranular Stress Corrosion Cracking of Core Shrouds in Boiling Water Reactors," in part, requested that licensees perform inspections of the core shrouds in their plants and/or perform repairs. Reporting Requirement No. 3 requested that licensees provide the results of the inspections performed within 30 days of completing the inspections. Niagara Mohawk has completed its required inspections of the Nine Mile Point Unit 1 core shroud welds H8, H9 and certain vertical welds. Specifically, inspections of the H8 weld consisted of an ultrasonic examination (UT) and, because of interferences, supplemental enhanced visual inspections (EVT) for those areas not accessible with the UT equipment. In support of the core shroud H1 through H7 weld repair (i.e., installation of tie rods), Niagara Mohawk performed EVT inspections of the shroud H9 weld and certain vertical welds. All inspections were performed and evaluated in accordance with the BWRVIP criteria provided by "Core Shroud NDE Uncertainty and Procedure Standard," dated November 21, 1994, except where indicated. The purpose of this letter is to submit the results of these inspections.

Attachment 1 to this letter provides a summary of the weld inspections. Attachment 2 provides the H8 weld UT inspection data package which includes details of the scans performed, inspection findings, scan plans, and a description of interferences where they limited O.D. tracker accessibility. Attachment 3 provides the H8 weld and vertical weld EVT data sheets which includes details of the areas inspected visually and associated inspection findings. Attachment 4 contains the EVT data sheet of the H9 weld. Attachment 5 provides the basis for the welds selected and inspection scope to support the tie rod repair.

Very truly yours,

C. D. Terry
Vice President - Nuclear Engineering

210041

A018

CDT/JMT/lmc
Attachments

xc: Regional Administrator, Region I
Mr. L. B. Marsh, Director, Project Directorate I-1, NRR
Mr. D. S. Brinkman, Senior Project Manager, NRR
Mr. B. S. Norris, Senior Resident Inspector
Records Management

UNITED STATES NUCLEAR REGULATORY COMMISSION

In the Matter of	)	
	)	
Niagara Mohawk Power Corporation	)	**Docket No. 50-220**
	)	
Nine Mile Point Unit 1	)	

C. D. Terry, being duly sworn, states that he is Vice President - Nuclear Engineering of Niagara Mohawk Power Corporation; that he is authorized on the part of said Corporation to sign and file with the Nuclear Regulatory Commission the document attached hereto; and that the document is true and correct to the best of his knowledge, information and belief.

C. D. Terry
Vice President - Nuclear Engineering

Subscribed and sworn before me,
in and for the State of New York
and the County of Oswego,
this 9 day of March, 1995

NOTARY PUBLIC
#01805038252
expires 1/23/97

ATTACHMENT 1

INSPECTION SUMMARY

Executive Summary

Niagara Mohawk Power Corporation (NMPC) has completed its required inspections of the Nine Mile Point Unit 1 core shroud welds H8, H9 and certain vertical welds. Specifically, inspections of the H8 weld consisted of an ultrasonic examination (UT) and, because of interferences, supplemental enhanced visual inspections (EVT) for those areas not accessible with the UT equipment. In support of the core shroud H1 through H7 weld repair (i.e., installation of tie rods), Niagara Mohawk performed EVT inspections of the shroud H9 weld and vertical welds.

The H8 inspection successfully examined approximately 45% cumulatively of the weld circumference by volumetric means. The inspection accessed all four quadrants of the weld circumference and therefore provided a comprehensive, distributed, sampling of the weld condition. One localized indication was found by UT and has been determined to be structurally not significant. The visual inspection examined an additional 27% cumulatively of the weld circumference. The visual inspection was in two sectors, one in each half of the weld circumference. The inspection found five minor indications grouped in a 20 degree sector. The cumulative length of indications seen visually is approximately 3 inches of the total of 160 inches of weld circumference inspected visually. Utilizing conservative assumptions and uncertainty factors as described below, NMPC has evaluated these indications as meeting the screening criteria. Based on the inspection results, NMPC has concluded that the H8 weld is structurally sound. NMPC will visually reinspect the indications found by EVT at the next refueling outage to confirm the continued integrity of the weld until crack growth predictions are confirmed and continued inspection is not warranted. The EVT inspections of the top surface of the H9 weld and vertical welds V9, V10, and V11 found no recordable indications and therefore, support the installation of the H1 through H7 weld repair.

NMPC will factor these inspections into the ongoing BWRVIP work on shroud weld reinspection requirements and their applicability to NMP1. Once the BWRVIP work on weld reinspection is complete, NMPC will establish plans for reinspection.

Inspection Limitations
H8

The cumulative inspection coverage by UT examination was 45.32% (260.59 inches) of the weld circumference. This was calculated based on the total coverage achieved by any one of the three transducers on the inspection tool (O.D. tracker). Coverage based on all three transducers passing any given point on the weld circumference was 37.93% (218.11 inches). Attachment 2 includes a coverage plot which describes the volume of support plate, weldment, and shroud support ring interrogated by the combination of UT beams. Areas not

inspected by the beams have not been included in the evaluation for structural integrity. Areas below the lower 45 degree shear wave at the bottom of the shroud support ring, on the lower weld underside radius, and above the upper OD creeping wave, are evaluated as if cracked. NRC accepted crack growth rates applied to these theoretical cracks result in a margin of approximately 1.90 inches remaining within the thickness of the shroud support ring after one operating cycle. The limitations on the extent of UT coverage by invessel interferences are also documented in Attachment 2.

The cumulative inspection coverage by EVT examination was 27% of the weld circumference (160 inches). Approximately 64 inches of EVT inspected the weld and both upper and lower heat affected zone (HAZs). Approximately 96 inches of the EVT inspected the weld and the upper HAZ only.

Use of the 45 degree shear wave (S), 60 degree refracted longitudinal wave (RL) and OD creeping wave transducers was qualified to the Core Shroud NDE Uncertainty and Procedure Standard by the inspection contractor on BWRVIP mock-up BWRVIP-A. Although the mock-up differs in that the plate to ring angle is different, this variable is considered not relevant in terms of indication detection and sizing uncertainty.

The H8 weld is bi-metallic whereas the BWRVIP-A mock-up is comprised of Type 304 plate material with Type 308 weldment. The materials are acoustically similar such that this variable is considered not relevant. Examination of bi-metallic welds, directly analogous to the H8 bi-metallic configuration, utilizing 45S and 60RL UT beams, is common industry practice and is well understood. There is limited industry experience in use of creeping waves on Alloy 600 and Inconel 182 materials, although the acoustic similarity of the materials suggests that this variable supports the creeping wave qualification.

H9/Vertical Welds

In support of the core shroud H1 through H7 weld repair by installation of tie rods, NMPC planned shroud weld EVT inspections as follows; the top surface of the H9 weld at four (4) 26 inch long locations, a six inch section each of the vertical seam welds V9, V10, V11, V12 as they intersect weld H5, from the inside surface, and the ring segment welds V5, V6 from the top surface of the plate ring. The 26 inch length of the H9 weld inspection was based on the weld adjacent to the two toggles (12 inches) plus an additional 7 inches on each side of the toggles. The additional 7 inches provides sufficient length for stress attenuation from the tie rods. The 6 inch length of the vertical weld inspections was determined adequate considering the effects of radiation on residual stresses and the fact that vertical welds have lower residual stresses as compared to horizontal welds.

The inspection scope for vertical welds V9, V10, and V11 was completed as planned. Inspection personnel were unable to locate the V12 weld, nor either the V5 or V6 welds. Considerable effort was expended in attempting to locate these welds. The top guide support ring was machined following fabrication and welding. Because of this post fabrication machining, inspectors were unable to locate the plate ring welds V5 and V6. The as built weld map appears to be accurate because welds V9, V10 and V11 were found at the

approximate locations specified. The inspectors looked for evidence of V5 and V6 at the 0 degrees and 180 degrees azimuths as indicated on the weld map. The inside surface and outside surface of the edges of the ring at 0 degrees and 180 degrees were also examined in an attempt to locate the welds. The top ring surface was cleaned and inspected over more than 180 degrees with particular attention directed at the expected locations of V5 and V6. No degraded condition was seen. NMPC has concluded that examinations were conducted at the appropriate locations and that no evidence of cracking was seen. Concerning the V12 weld, inspections of the other vertical welds (V9, V10, and V11) were completed and no indications found. Niagara Mohawk considers this a representative sample of the NMP1 shroud vertical welds. Accordingly, no additional efforts were made to locate V12. Attachment 5 provides the basis for the welds selected and inspection scope required to support the tie rod repair.

Inspection Findings
H8

One recordable indication was found by UT on the underside of the shroud support cone. The indication is located at the presumed interface of the lower weld and support plate base material. The indication is sized as 0.5 inches deep, 3.12 inches long and is located at nominally 127 degrees azimuth. Applying the measurement uncertainty provided by the Core Shroud NDE Uncertainty and Procedure Standard for UT sizing, the indication, when evaluated by NMPC was assumed to be 0.65 inches deep and 3.92 inches in length. NMPC's screening criteria as outlined in our submittal dated February 14, 1995, is met with significant margin. An evaluation of the probable root cause of the indication presuming it to be IGSCC has been performed. The evaluation concluded that: such cracking is consistent with laboratory and field experience, that the initiation site is associated with the Alloy 182 weld metal with propagation into the Alloy 600 conical support, and that the local initiator was probably a weld lack of fusion site. The evaluation further concludes that, once initiated, the early crack growth through these materials was probably significantly higher than present, due to early plant water conductivity. Based on the current plant water conductivity, crack growth is assessed as much slower. The indication as found is consistent with this understanding of initiation and plant history. Based on this evaluation, and NMPC's acceptance criteria, the indication is considered to be not structurally significant.

Five recordable indications were found by enhanced visual inspection on the vertical surface of the shroud support ring. The indications may be in the upper HAZ of H8 or the lower HAZ of H7 and exhibit the characteristics of tight IGSCC cracking. The indications range in length from approximately 0.5 inches to 0.75 inches. Lengths were estimated by the examiner based on local benchmarks such as the weld crown width. Four of the indications are grouped in one region between azimuths 348 degrees through 356 degrees. One indication is located at azimuth 5 degrees. Applying the measurement uncertainty provided by the above referenced standard for visual inspection measurement, NMPC has conservatively evaluated the four indications grouped together as one flaw. The resultant assumed flaw, plus the measurement uncertainty value of 1.25 inches added to each end, results in an assumed total flaw length of 15.3 inches. The referenced uncertainty standard does not address short individual indications in terms of length measurement uncertainty.

For the purposes of evaluating the lone indication at azimuth 5 degrees, NMPC assumed an indication length of 1.0 inch. The indications as described have been evaluated and found to meet NMPC's screening criteria with significant margin. An evaluation of probable root cause has been conducted for these indications. The indications are surface connected on furnace sensitized stainless Type 304 material. As discussed in earlier submittals, IGSCC is not unexpected in this material. The indications may be a result of residual fit-up or fabrication stresses in the H7 weld HAZ or localized cold work of the forged ring adjacent to the H8 weld. Either initiating condition would be consistent with the indications as found. The IGSCC might be expected to arrest or propagate depending on the residual stresses in the area and plant water chemistry. Crack propagation utilizing NRC accepted values will result in no significant reduction in the structural margin through several cycles. NMPC will visually reinspect the indications at the next refueling outage to confirm that the assumptions in the evaluation with regard to postulated crack growth remain bounding.

H9/Vertical

The EVT inspections of the top surface of the H9 weld and vertical welds V9, V10, and V11 found no recordable indications. Attachments 3 and 4 contain the examination data sheets documenting these inspections. As previously indicated, inspections of the H9 weld involved a top surface examination at four locations of at least 26 inches. A basis for the 26 inch length was also provided. However, because of a field installation error that resulted in a mislocated tie rod, Niagara Mohawk will re-evaluate the inspection performed at this tie rod to determine its adequacy. The results of this assessment will be submitted to the Commission.

ATTACHMENT 2

GE Nuclear Energy

EXAMINATION SUMMARY SHEET

REPORT NO.: R-001

PROJECT: NMP-1 SHROUD 1ETED

PROCEDURE: UT-NMP-503V3 REV: 0 FRR: NMP-2 N/A N/A

SYSTEM: SHROUD

N/A REV: N/A FRR: N/A N/A N/A

WELD NO.: H-8

CONFIGURATION: SUPPORT RING TO CONE SKIRT

N/A REV: N/A FRR: N/A N/A N/A

EXAMINER: CHARLES VANHECKE LEVEL: II

☐ MT ☐ PT ■ UT ☐ VT

EXAMINER: MARK SEBBY LEVEL: II

WELD TYPE: ■ CIRCUMFERENTIAL ☐ LONGITUDINAL ☐ OTHER N/A

EXAMINER: N/A LEVEL: N/A

DATA SHEET NO.(S): D-001, D-002, D-003, D-004, D-005, D-006, D-007, D-008

CAL SHEET NO.(S): C-001, C-002, C-003

During the ultrasonic examination of the above referenced weld, one (1) indication associated with IGSCC was recorded by the SMART 2000 system utilizing a 45° shear wave, OD creeping wave and 60° refracted longitudinal (RL) wave search units.

This indication has the following parameters:

Indication Number	*Distance from Vessel '0'	Total Length	Flaw Depth	Remaining Ligament	Side of Weld	Surface Connection	Flaw Type	Search Unit
1).	126.92° / 203.1"	1.95° / 3.12"	0.50"	1.0"	Lower	ID	IGSCC	45° SHR, 60°RL ODCR

*Measurement in degrees / inches

The 45° shear wave search unit did record non-relevant indications, weld discontinuities and weld interface along with the indication referenced above.

The 60° RL search unit did record non-relevant indications and weld interface along with the indication referenced above.

The OD creeping wave search unit did record non-relevant indications along with the shear component to the indication referenced above.

Circumferential (L) dimensions were recorded in angular units. The conversion factor for linear units is 1.60 inches per degree.

This exam was limited to the areas scanned due to obstructions from the guide rods, shroud lifting lugs, specimen holders, core spray downcomers, core spray bellows and vibration instrumentation test brackets. For more details see drawings NMP-01-ROLL, NMP-01-TPVW and the scan plan.

Exam Area: Examined 13 lug sets for a total area scanned of 163.16°. Of the 163.16°, 136.56° was interrogated by all transducers. 23 lug sets were not examined due to inaccessibility.

George E. [illegible]	III	2-27-95			
SUMMARY BY	LEVEL	DATE	GE INDEPENDENT REVIEW	DATE	
			[illegible]	2-28-95	PAGE: 1 OF: 17
GE REVIEWED BY	LEVEL	DATE	UTILITY REVIEW	DATE	

FORM UT-09 REV. 6

GE Nuclear Energy

ULTRASONIC SCAN DATA PRINT SHEET (AUTOMATED WITH *Smart 2000*)

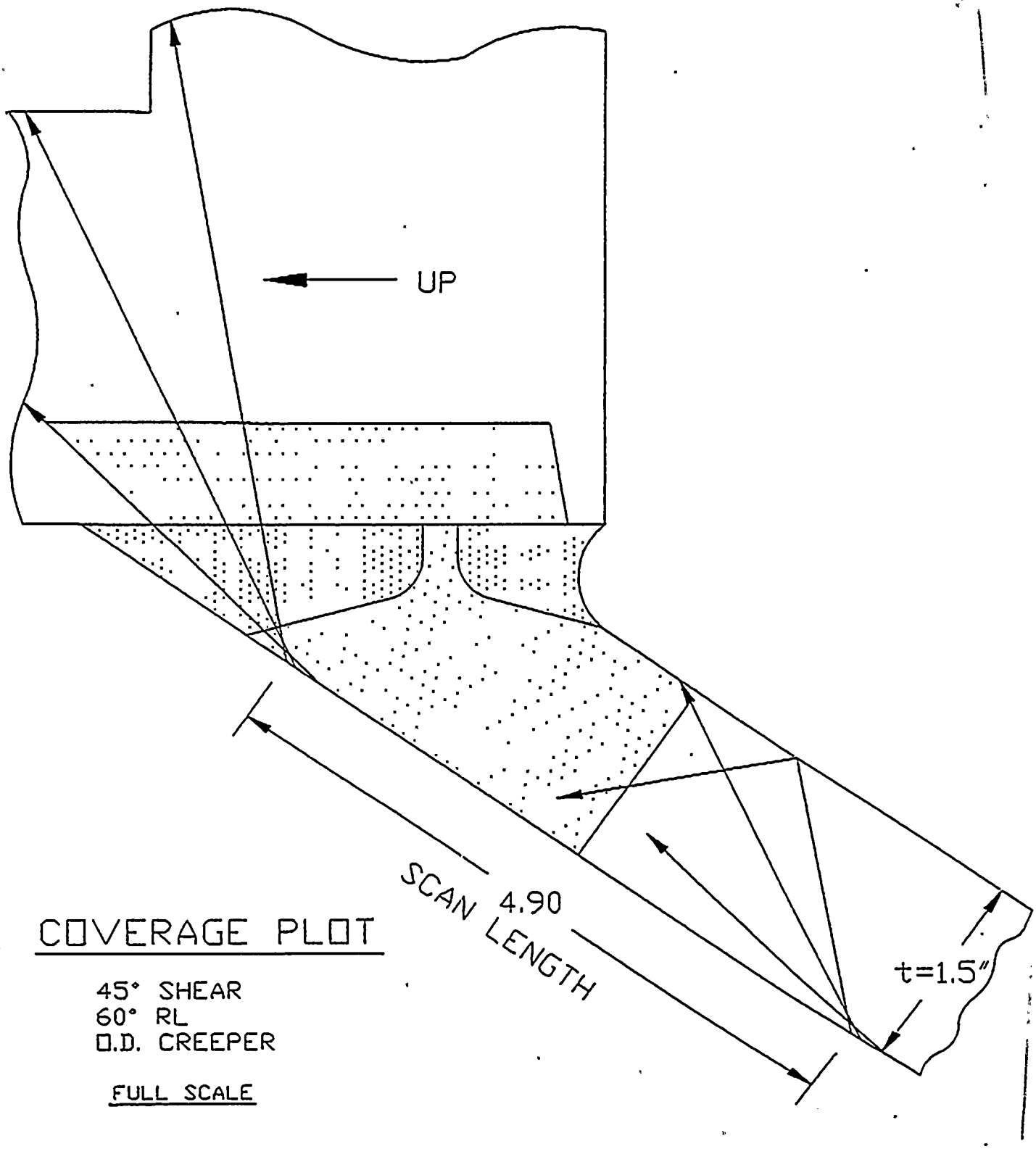

COVERAGE PLOT

45° SHEAR
60° RL
O.D. CREEPER

FULL SCALE

SITE: NINE MILE POINT UNIT: 1 PROJECT NO.: 1ETED SUMMARY NO.: R-001

WELD NO.: SHROUD H-8 SEARCH UNIT: 45°S, 60°RL INDICATION NO.: N/A PAGE: 2 OF: 17

FORM UT-13 REV. 1

GE Nuclear Energy

ULTRASONIC SCAN DATA PRINT SHEET (AUTOMATED WITH *Smart 2000*)

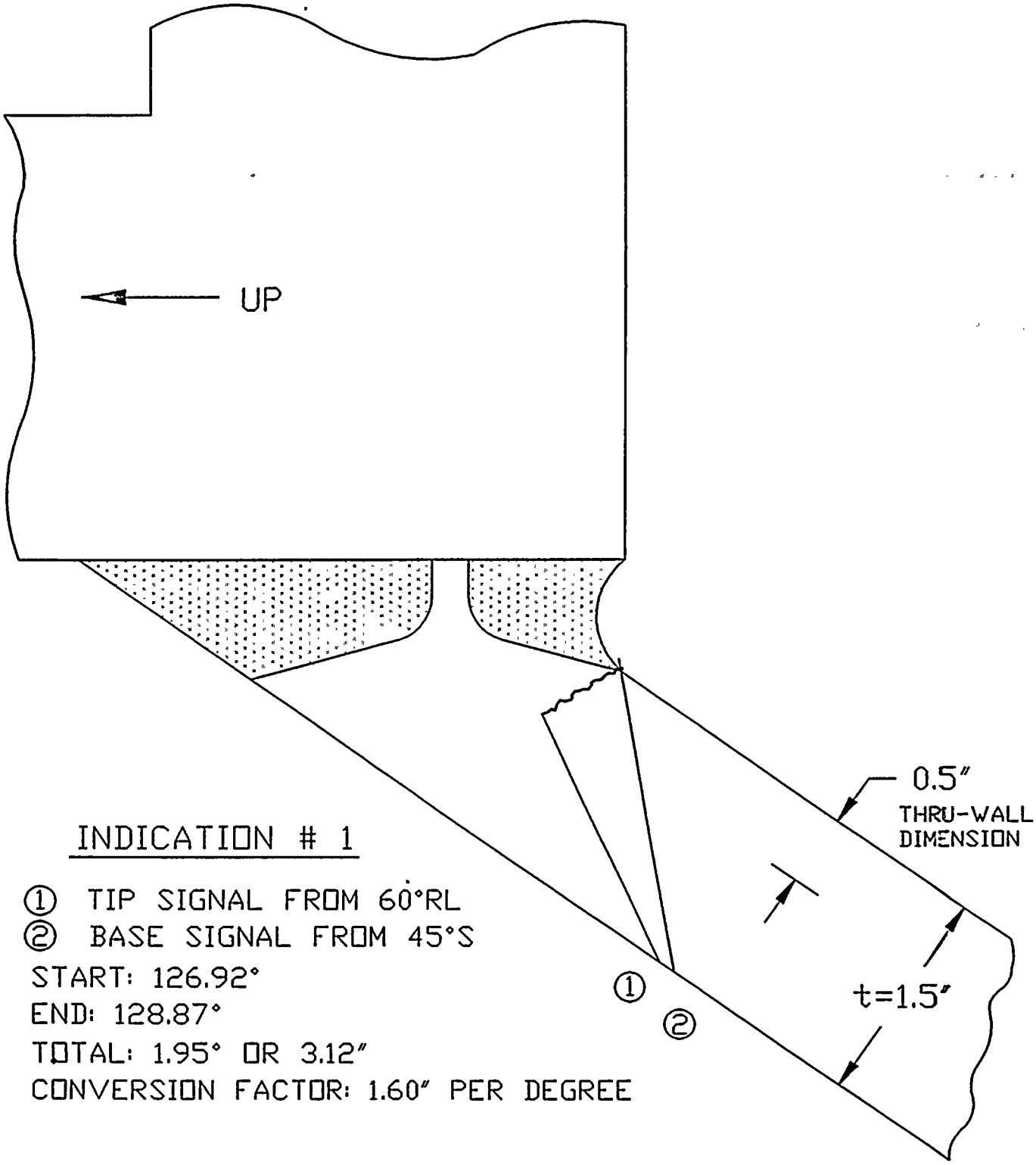

INDICATION # 1

① TIP SIGNAL FROM 60°RL
② BASE SIGNAL FROM 45°S
START: 126.92°
END: 128.87°
TOTAL: 1.95° OR 3.12″
CONVERSION FACTOR: 1.60″ PER DEGREE

FULL SCALE

SITE: NINE MILE POINT UNIT: 1 PROJECT NO.: 1ETED SUMMARY NO.: R-001

WELD NO.: SHROUD H-8 SEARCH UNIT: 45°S, 60°RL INDICATION NO.: 1 PAGE: 3 OF: 17

FORM UT-13 REV. 1

GE Nuclear Energy

ULTRASONIC SCAN DATA PRINT SHEET (AUTOMATED WITH *Smart 2000*)

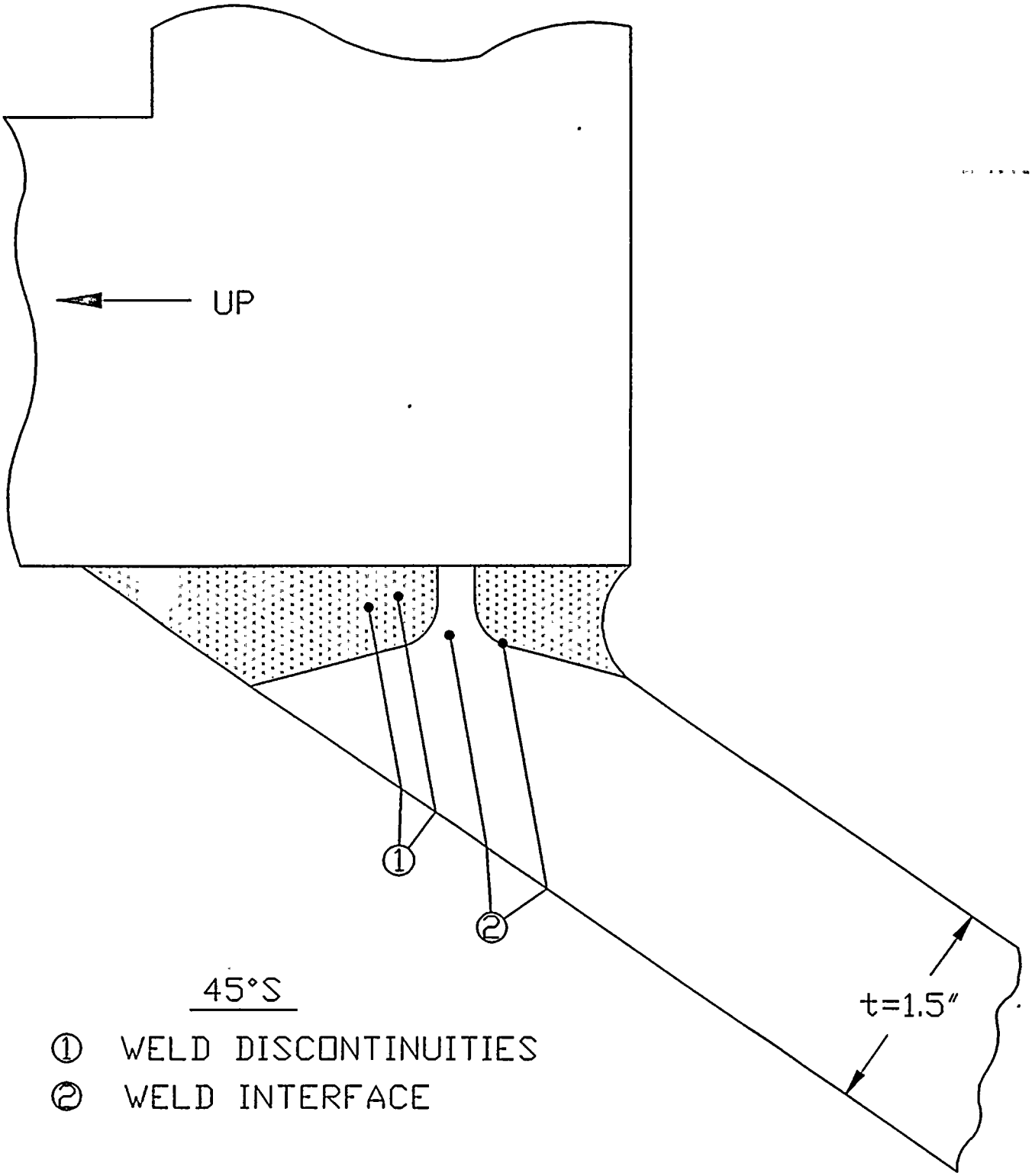

45°S

① WELD DISCONTINUITIES

② WELD INTERFACE

FULL SCALE

SITE: NINE MILE POINT UNIT: 1 PROJECT NO.: 1ETED SUMMARY NO.: R-001

WELD NO.: SHROUD H-8 SEARCH UNIT: 45° SHR INDICATION NO.: N/A PAGE: 4 OF: 17

FORM UT-13 REV. 1

GE Nuclear Energy

ULTRASONIC SCAN DATA PRINT SHEET (AUTOMATED WITH *Smart 2000*)

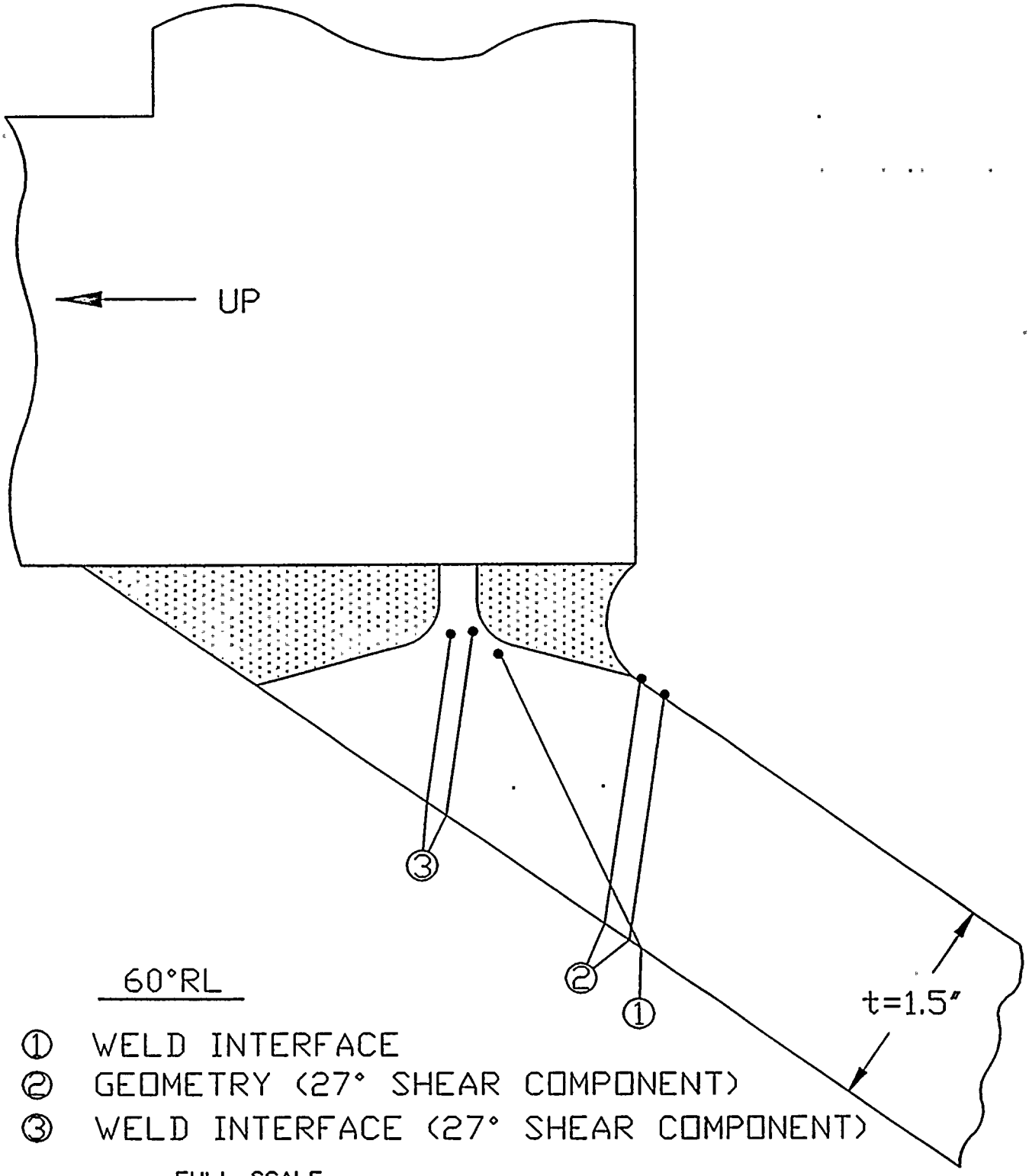

60°RL

① WELD INTERFACE
② GEOMETRY (27° SHEAR COMPONENT)
③ WELD INTERFACE (27° SHEAR COMPONENT)

FULL SCALE

SITE: NINE MILE POINT UNIT: 1 PROJECT NO.: 1ETED SUMMARY NO.: R-001

WELD NO.: SHROUD H-8 SEARCH UNIT: 60°RL INDICATION NO.: N/A PAGE: 5 OF: 17

FORM UT-13 REV. 1

GE Nuclear Energy

ULTRASONIC SCAN DATA PRINT SHEET (AUTOMATED WITH *Smart 2000*)

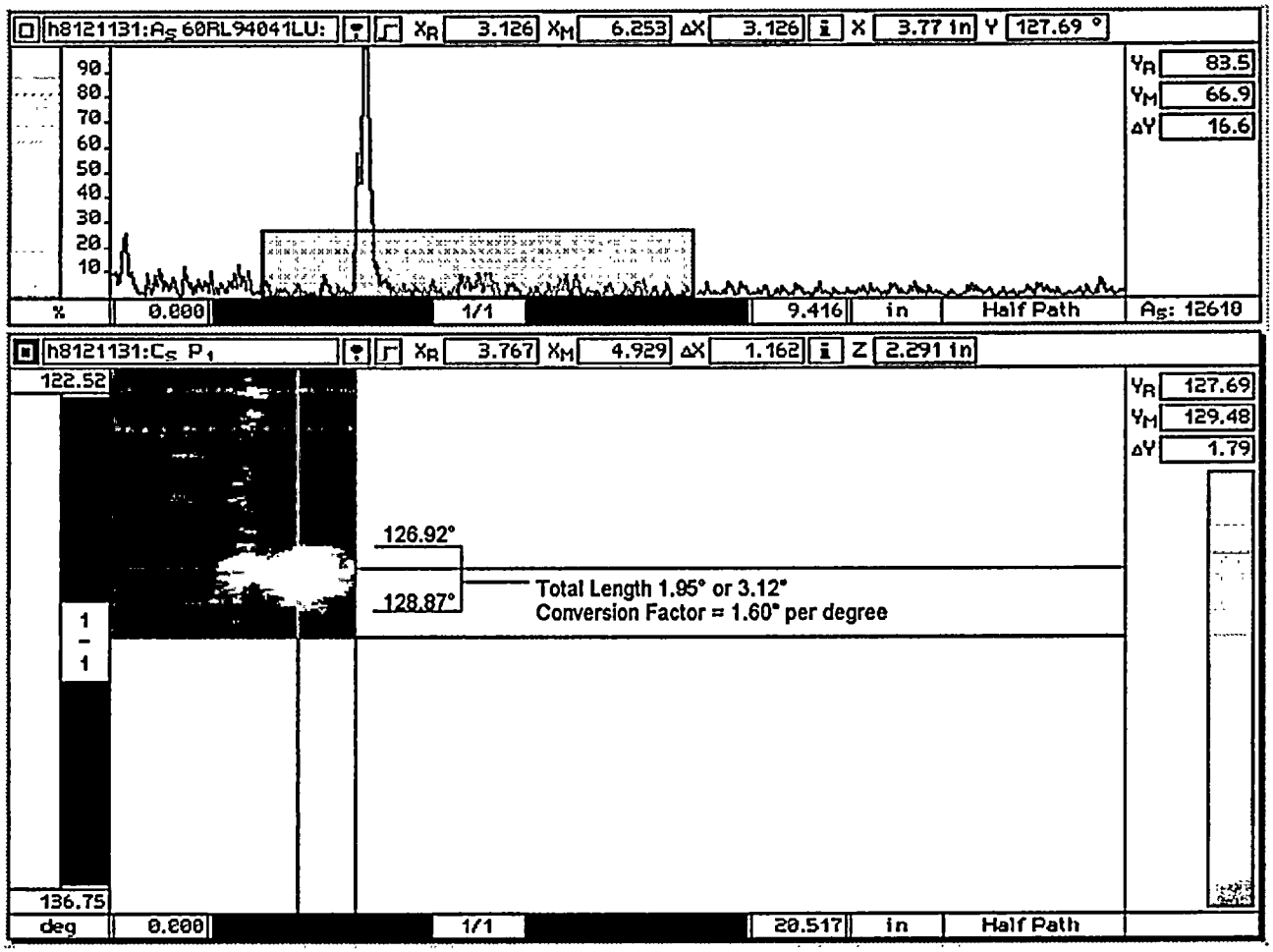

Indication #1 is located in the plate material.

SITE: NINE MILE POINT UNIT: 1 PROJECT NO.: 1ETED SUMMARY NO.: R-001

WELD NO.: SHROUD H-8 SEARCH UNIT: 60°RL INDICATION NO.: 1 PAGE: 6 OF: 17

FORM UT-13 REV. 1

GE Nuclear Energy

SHROUD ULTRASONIC EXAMINATION DATA SHEET (AUTOMATED with Smart 2000 OD Tracker)

SITE: NINE MILE POINT
UNIT: 1
PROJECT NO.: 1ETED

PROCEDURE NO.: UT-NMP-503V3
REVISION NO.: 0 (ERR#NMP-2)

REPORT NO.: R-001
DATA SHEET NO.: D-001
CALIBRATION SHEET NO.: C-001, C-002, C-003

Weld ID: H-8 Exam Surface: OD Crown Width: 1.5" (Approx)

Search Unit Separation (Front To Front): N/A Wo Location: X-DUCER FRONT @ DNST TOE

Position/ Set Up	Scan Time	Search Unit Start:	Total ° Scanned	File Name and Disk/Side:	Search Unit	Gain dB	Results: (See Legend)	Comments:
Cylinder ☒ CW ☐ CCW Lug Set # 5	2255 Time	39.55 45°			45° LKDN	N/A	N/A	NONE
					45° LKUP	41	C	
	2/23/95 Date	38.21 60°	7.0	H8037047	60° LKDN	N/A	N/A	
					60° LKUP	56	C	
Lug Side ☐ CW ☒ CCW	MJS Examiner's Initials	36.89 ODCR	0.0 Index Arm Start	D-04/A	ODCR LKDN	N/A	N/A	
					ODCR LKUP	42	C	
Cylinder ☒ CW ☐ CCW Lug Set # 5	2332 Time	46.05 45°			45° LKDN	N/A	N/A	NONE
					45° LKUP	41	C	
	2/23/95 Date	44.71 60°	7.0	H8043053	60° LKDN	N/A	N/A	
					60° LKUP	56	C	
Lug Side ☐ CW ☒ CCW	MJS Examiner's Initials	43.39 ODCR	6.5 Index Arm Start	D-04/A	ODCR LKDN	N/A	N/A	
					ODCR LKUP	42	C	
Cylinder ☒ CW ☐ CCW Lug Set # 5	0018 Time	52.55 45°			45° LKDN	N/A	N/A	NONE
					45° LKUP	41	C	
	2/24/95 Date	51.21 60°	2.0	H8050055	60° LKDN	N/A	N/A	
					60° LKUP	56	C	
Lug Side ☐ CW ☒ CCW	MJS Examiner's Initials	49.89 ODCR	13.0 Index Arm Start	D-04/A	ODCR LKDN	N/A	N/A	
					ODCR LKUP	42	C	
Cylinder ☐ CW ☒ CCW Lug Set # 8	1240 Time	73.11 45°			45° LKDN	N/A	N/A	SPECIAL SETUP-CCW CYLINDER ON CCW SIDE OF CW LUG.
					45° LKUP	41	F,C	
	2/22/95 Date	71.77 60°	7.0	H8070080	60° LKDN	N/A	N/A	
					60° LKUP	56	C	
Lug Side ☒ CW ☐ CCW	CVH Examiner's Initials	70.45 ODCR	0.0 Index Arm Start	D-01/A	ODCR LKDN	N/A	N/A	
					ODCR LKUP	42	C	

CALIBRATION GAIN:

45° LKDN	N/A	60° LKUP	48
45° LKUP	25	ODCR LKDN	N/A
60° LKDN	N/A	ODCR LKUP	34

EXAMINATION RESULTS LEGEND:

A - NO RECORDABLE INDICATIONS
B - NON-GEOMETRIC INDICATIONS
C - NON-RELEVANT INDICATIONS
D - ACOUSTIC INTERFACE
E - INSIDE SURFACE GEOMETRY
F - OUTSIDE SURFACE
G - WELD DISCONTINUITY
H - WELD CROWN GEOMETRY
J - OTHER (SEE COMMENTS)

REMARKS: TEMPERATURE READING OBTAINED FROM CONTROL ROOM OF 103°

Charles J. VanNote	II	2-22-95	GE INDEPENDENT REVIEW	DATE	
EXAMINER	LEVEL	DATE			
George E. Hafner	III	2-27-95	UTILITY REVIEW	DATE	PAGE: 7 OF: 17
GE REVIEWED BY	LEVEL	DATE			

FORM UT32_R0

GE Nuclear Energy

SHROUD ULTRASONIC EXAMINATION DATA SHEET (AUTOMATED with Smart 2000 OD Tracker)

SITE: NINE MILE POINT
UNIT: 1
PROJECT NO.: 1ETED

PROCEDURE NO.: UT-NMP-503V3
REVISION NO.: 0 (ERR#NMP-2)

REPORT NO.: R-001
DATA SHEET NO.: D-002
CALIBRATION SHEET NO.: C-001, C-002, C-003

Weld ID: H-8 Exam Surface: OD Crown Width: 1.5" (Approx)

Search Unit Separation (Front To Front): N/A Wo Location: X-DUCER FRONT @ DNST TOE

Position/ Set Up	Scan Time	Search Unit Start:	Total * Scanned	File Name and Disk/Side:	Search Unit	Gain dB	Results: (See Legend)	Comments:
Cylinder ☐ cw ☒ ccw Lug Set # 8 Lug Side ☒ cw ☐ ccw	1315 Time	79.61 45°			45° LKDN	N/A	N/A	SPECIAL SETUP-CCW CYLINDER ON CCW SIDE OF CW LUG.
	2/22/95 Date	78.27 60°	4.0	H3077074	45° LKUP	41	C	
	CVH Examiner's Initials	76.95 ODCR	6.5 Index Arm Start	D-01/A	60° LKDN	N/A	N/A	
					60° LKUP	56	C	
					ODCR LKDN	N/A	N/A	
					ODCR LKUP	42	C	
Cylinder ☒ cw ☐ ccw Lug Set # 9 Lug Side ☐ cw ☒ ccw	1100 Time	83.11 45°			45° LKDN	N/A	N/A	NONE
	2/22/95 Date	81.77 60°	7.0	H3080090	45° LKUP	41	F,C	
	CVH Examiner's Initials	80.45 ODCR	3.56 Index Arm Start	D-01/A	60° LKDN	N/A	N/A	
					60° LKUP	56	C	
					ODCR LKDN	N/A	N/A	
					ODCR LKUP	42	C	
Cylinder ☒ cw ☐ ccw Lug Set # 9 Lug Side ☐ cw ☒ ccw	1215 Time	89.61 45°			45° LKDN	N/A	N/A	NONE
	2/22/95 Date	88.27 60°	4.75	H3087094	45° LKUP	41	C	
	CVH Examiner's Initials	86.95 ODCR	10.06 Index Arm Start	D-01/A	60° LKDN	N/A	N/A	
					60° LKUP	56	C	
					ODCR LKDN	N/A	N/A	
					ODCR LKUP	42	C	
Cylinder ☒ cw ☐ ccw Lug Set # 10 Lug Side ☐ cw ☒ ccw	1345 Time	93.86 45°			45° LKDN	N/A	N/A	NONE
	2/22/95 Date	92.52 60°	7.0	H3091101	45° LKUP	41	F,C	
	CVH Examiner's Initials	91.20 ODCR	4.31 Index Arm Start	D-01/A	60° LKDN	N/A	N/A	
					60° LKUP	56	C	
					ODCR LKDN	N/A	N/A	
					ODCR LKUP	42	C	

CALIBRATION GAIN:

45° LKDN	N/A	60° LKUP	48
45° LKUP	25	ODCR LKDN	N/A
60° LKDN	N/A	ODCR LKUP	34

EXAMINATION RESULTS LEGEND:

A - NO RECORDABLE INDICATIONS
B - NON-GEOMETRIC INDICATIONS
C - NON-RELEVANT INDICATIONS
D - ACOUSTIC INTERFACE
E - INSIDE SURFACE GEOMETRY
F - OUTSIDE SURFACE
G - WELD DISCONTINUITY
H - WELD CROWN GEOMETRY
J - OTHER (SEE COMMENTS)

REMARKS: TEMPERATURE READING OBTAINED FROM CONTROL ROOM OF 103°.

Charles J. Vanhoke	II	2-22-95			
EXAMINER	LEVEL	DATE	GE INDEPENDENT REVIEW	DATE	
George E. Clifford	III	2-27-95			
GE REVIEWED BY	LEVEL	DATE	UTILITY REVIEW	DATE	PAGE: 8 OF: 17

FORM UT32_R0

GE Nuclear Energy

SHROUD ULTRASONIC EXAMINATION DATA SHEET (AUTOMATED with Smart 2000 OD Tracker)

SITE: NINE MILE POINT
UNIT: 1
PROJECT NO.: 1ETED

PROCEDURE NO.: UT-NMP-503V3
REVISION NO.: 0 (FRR#NMP-2)

REPORT NO.: R-001
DATA SHEET NO.: D-003
CALIBRATION SHEET NO.: C-001, C-002, C-003

Weld ID: H-8 Exam Surface: OD Crown Width: 1.5" (Approx)

Search Unit Separation (Front To Front): N/A Wo Location: X-DUCER FRONT @ DNST TOE

Position/ Set Up	Scan Time	Search Unit Start:	Total ° Scanned	File Name and Disk/Side:	Search Unit	Gain dB	Results: (See Legend)	Comments:
Cylinder ☒ cw ☐ ccw	1415 Time	100.36 45°			45° LKDN	N/A	N/A	NONE
Lug Set #					45° LKUP	41	C	
	2/22/95 Date	99.02 60°	4.0	H8098104	60° LKDN	N/A	N/A	
10					60° LKUP	56	C	
Lug Side ☐ cw ☒ ccw	CVH Examiner's Initials	97.70 ODCR	10.81 Index Arm Start	D-01/A	ODCR LKDN	N/A	N/A	
					ODCR LKUP	42	C	
Cylinder ☒ cw ☐ ccw	1450 Time	103.86 45°			45° LKDN	N/A	N/A	NONE
Lug Set #					45° LKUP	41	A	
	2/22/95 Date	102.52 60°	7.0	H8101111	60° LKDN	N/A	N/A	
11					60° LKUP	56	C	
Lug Side ☐ cw ☒ ccw	CVH Examiner's Initials	101.20 ODCR	4.31 Index Arm Start	D-02/A	ODCR LKDN	N/A	N/A	
					ODCR LKUP	42	C	
Cylinder ☒ cw ☐ ccw	1524 Time	110.36 45°			45° LKDN	N/A	N/A	NONE
Lug Set #					45° LKUP	41	A	
	2/22/95 Date	109.02 60°	4.0	H8108114	60° LKDN	N/A	N/A	
11					60° LKUP	56	F,C	
Lug Side ☐ cw ☒ ccw	CVH Examiner's Initials	107.70 ODCR	10.81 Index Arm Start	D-02/A	ODCR LKDN	N/A	N/A	
					ODCR LKUP	42	C	
Cylinder ☒ cw ☐ ccw	1550 Time	113.86 45°			45° LKDN	N/A	N/A	NONE
Lug Set #					45° LKUP	41	C	
	2/22/95 Date	112.52 60°	7.0	H8111121	60° LKDN	N/A	N/A	
12					60° LKUP	56	C	
Lug Side ☐ cw ☒ ccw	CVH Examiner's Initials	111.20 ODCR	4.30 Index Arm Start	D-02/A	ODCR LKDN	N/A	N/A	
					ODCR LKUP	42	C	

CALIBRATION GAIN:

45° LKDN	N/A	60° LKUP	48
45° LKUP	25	ODCR LKDN	N/A
60° LKDN	N/A	ODCR LKUP	34

EXAMINATION RESULTS LEGEND:

A - NO RECORDABLE INDICATIONS
B - NON-GEOMETRIC INDICATIONS
C - NON-RELEVANT INDICATIONS
D - ACOUSTIC INTERFACE
E - INSIDE SURFACE GEOMETRY
F - OUTSIDE SURFACE
G - WELD DISCONTINUITY
H - WELD CROWN GEOMETRY
J - OTHER (SEE COMMENTS)

REMARKS: TEMPERATURE READING OBTAINED FROM CONTROL ROOM OF 103°

Charles J. VanNoke	II	2-22-95	GE INDEPENDENT REVIEW	DATE	
EXAMINER	LEVEL	DATE			
George E. Bechtel	III	2-27-95	UTILITY REVIEW	DATE	PAGE: 9 OF: 17
GE REVIEWED BY	LEVEL	DATE			

FORM UT32_R0

GE Nuclear Energy

SHROUD ULTRASONIC EXAMINATION DATA SHEET (AUTOMATED with Smart 2000 OD Tracker)

SITE: NINE MILE POINT
UNIT: 1
PROJECT NO.: 1ETED

PROCEDURE NO.: UT-NMP-503V3
REVISION NO.: 0 (FRR#NMP-2)

REPORT NO.: R-001
DATA SHEET NO.: D-004
CALIBRATION SHEET NO.: C-001, C-002, C-003

Weld ID: H-8 Exam Surface: OD Crown Width: 1.5" (Approx)

Search Unit Separation (Front To Front): N/A Wo Location: X-DUCER FRONT @ DNST TOE

Position/ Set Up	Scan Time	Search Unit Start:	Total ° Scanned	File Name and Disk/Side:	Search Unit	Gain dB	Results: (See Legend)	Comments:
Cylinder ☒ cw ☐ ccw	1635 Time	120.36 45°			45° LKDN	N/A	N/A	NONE
Lug Set #					45° LKUP	41	A	
12	2/22/95 Date	119.02 60°	4.0	H8188124	60° LKDN	N/A	N/A	
Lug Side ☐ cw ☒ ccw	CVH Examiner's Initials	117.70 ODCR	10.81 Index Arm Start	D-02/A	60° LKUP	56	C	
					ODCR LKDN	N/A	N/A	
					ODCR LKUP	42	C	
Cylinder ☐ cw ☒ ccw	1740 Time	123.86 45°			45° LKDN	N/A	N/A	
Lug Set #					45° LKUP	41	B	
13	2/22/95 Date	122.52 60°	7.0	H8121131	60° LKDN	N/A	N/A	
Lug Side ☒ cw ☐ ccw	CVH Examiner's Initials	121.20 ODCR	0.0 Index Arm Start	D-02/A	60° LKUP	56	B	126.92°-128.87°
					ODCR LKDN	N/A	N/A	
					ODCR LKUP	42	C	
Cylinder ☐ cw ☒ ccw	1820 Time	130.36 45°			45° LKDN	N/A	N/A	NONE
Lug Set #					45° LKUP	41	A	
13	2/22/95 Date	129.02 60°	4.0	H8128134	60° LKDN	N/A	N/A	
Lug Side ☒ cw ☐ ccw	CVH Examiner's Initials	127.70 ODCR	6.5 Index Arm Start	D-02/A	60° LKUP	56	C	
					ODCR LKDN	N/A	N/A	
					ODCR LKUP	42	C	
Cylinder ☐ cw ☒ ccw	1900 Time	133.86 45°			45° LKDN	N/A	N/A	NONE
Lug Set #					45° LKUP	41	A	
13	2/22/95 Date	132.52 60°	5.31	H8131139	60° LKDN	N/A	N/A	
Lug Side ☒ cw ☐ ccw	MSS Examiner's Initials	131.20 ODCR	10.0 Index Arm Start	D-02/A	60° LKUP	56	C	
					ODCR LKDN	N/A	N/A	
					ODCR LKUP	42	C	

CALIBRATION GAIN:

45° LKDN	N/A	60° LKUP	48
45° LKUP	25	ODCR LKDN	N/A
60° LKDN	N/A	ODCR LKUP	34

EXAMINATION RESULTS LEGEND:

A - NO RECORDABLE INDICATIONS
B - NON-GEOMETRIC INDICATIONS
C - NON-RELEVANT INDICATIONS
D - ACOUSTIC INTERFACE
E - INSIDE SURFACE GEOMETRY
F - OUTSIDE SURFACE
G - WELD DISCONTINUITY
H - WELD CROWN GEOMETRY
J - OTHER (SEE COMMENTS)

REMARKS: TEMPERATURE READING OBTAINED FROM CONTROL ROOM OF 103°.

EXAMINER	LEVEL II	DATE 2/22/95	GE INDEPENDENT REVIEW	DATE	
GE REVIEWED BY	LEVEL III	DATE 2-27-95	UTILITY REVIEW	DATE	PAGE: 10 OF: 17

FORM UT33_R0

GE Nuclear Energy

SHROUD ULTRASONIC EXAMINATION DATA SHEET (AUTOMATED with Smart 2000 OD Tracker)

SITE: NINE MILE POINT
UNIT: 1
PROJECT NO.: 1ETED

PROCEDURE NO.: UT-NMP-503V3
REVISION NO.: 0 (ERR#NMP-2)

REPORT NO.: R-001
DATA SHEET NO.: D-005
CALIBRATION SHEET NO.: C-001, C-002, C-003

Weld ID: H-8 Exam Surface: OD Crown Width: 1.5" (Approx)

Search Unit Separation (Front To Front): N/A Wo Location: X-DUCER FRONT @ DNST TOE

Position/ Set Up	Scan Time	Search Unit Start:	Total° Scanned	File Name and Disk/Side:	Search Unit	Gain dB	Results: (See Legend)	Comments:
Cylinder ☒ cw ☐ ccw Lug Set # 17	1400 Time	161.04 45°			45° LKDN	N/A	N/A	SPECIAL SETUP-CW CYLINDER ON CCW SIDE OF CW LUG.
					45° LKUP	41	A	
	2/24/95 Date	159.70 60°	7.0	H8158168	60° LKDN	N/A	N/A	
					60° LKUP	56	C	
Lug Side ☒ cw ☐ ccw	CVH Examiner's Initials	158.38 ODCR	0.0 Index Arm Start	D-03/B	ODCR LKDN	N/A	N/A	
					ODCR LKUP	42	C	
Cylinder ☒ cw ☐ ccw Lug Set # 17	1435 Time	167.54 45°			45° LKDN	N/A	N/A	SPECIAL SETUP-CW CYLINDER ON CCW SIDE OF CW LUG
					45° LKUP	41	A	
	2/24/95 Date	166.20 60°	7.0	H8165175	60° LKDN	N/A	N/A	
					60° LKUP	56	C	
Lug Side ☒ cw ☐ ccw	CVH Examiner's Initials	164.85 ODCR	6.5 Index Arm Start	D-03/B	ODCR LKDN	N/A	N/A	
					ODCR LKUP	42	C	
Cylinder ☒ cw ☐ ccw Lug Set # 17	1510 Time	174.04 45°			45° LKDN	N/A	N/A	SPECIAL SETUP-CW CYLINDER ON CCW SIDE OF CW LUG.
					45° LKUP	41	A	
	2/24/95 Date	172.70 60°	2.5	H8171177	60° LKDN	N/A	N/A	
					60° LKUP	56	C	
Lug Side ☒ cw ☐ ccw	CVH Examiner's Initials	171.35 ODCR	13.0 Index Arm Start	D-03/B	ODCR LKDN	N/A	N/A	
					ODCR LKUP	42	C	
Cylinder ☐ cw ☒ ccw Lug Set # 26	2300 Time	253.11 45°			45° LKDN	N/A	N/A	SPECIAL SETUP- CCW CYLINDER ON CCW SIDE OF CW LUG.
					45° LKUP	41	C	
	2/22/95 Date	251.77 60°	7.75	H8261250	60° LKDN	N/A	N/A	
					60° LKUP	56	C	FILENAME SHOULD BE :H8250261
Lug Side ☒ cw ☐ ccw	MDS Examiner's Initials	250.45 ODCR	0.0 Index Arm Start	D-02/A	ODCR LKDN	N/A	N/A	
					ODCR LKUP	42	C	

CALIBRATION GAIN:

45° LKDN	N/A	60° LKUP	48
45° LKUP	25	ODCR LKDN	N/A
60° LKDN	N/A	ODCR LKUP	34

EXAMINATION RESULTS LEGEND:

A - NO RECORDABLE INDICATIONS
B - NON-GEOMETRIC INDICATIONS
C - NON-RELEVANT INDICATIONS
D - ACOUSTIC INTERFACE
E - INSIDE SURFACE GEOMETRY
F - OUTSIDE SURFACE
G - WELD DISCONTINUITY
H - WELD CROWN GEOMETRY
J - OTHER (SEE COMMENTS)

REMARKS: TEMPERATURE READING OBTAINED FROM CONTROL ROOM OF 103°.

EXAMINER	LEVEL II	DATE 2/22/95	GE INDEPENDENT REVIEW	DATE	
GE REVIEWED BY	LEVEL III	DATE 2-27-95	UTILITY REVIEW	DATE	PAGE: 11 OF: 17

FORM UT32_R0

GE Nuclear Energy

SHROUD ULTRASONIC EXAMINATION DATA SHEET (AUTOMATED with Smart 2000 OD Tracker)

SITE: NINE MILE POINT
UNIT: 1
PROJECT NO.: 1ETED

PROCEDURE NO.: UT-NMP-503V3
REVISION NO.: 0 (ERR#NMP-2)

REPORT NO.: R-001
DATA SHEET NO.: D-006
CALIBRATION SHEET NO.: C-001, C-002, C-003

Weld ID: H-8 Exam Surface: OD Crown Width: 1.5" (Approx)

Search Unit Separation (Front To Front): N/A Wo Location: X-DUCER FRONT @ DNST TOE

Position/ Set Up	Scan Time	Search Unit Start:	Total ° Scanned	File Name and Disk/Side:	Search Unit	Gain dB	Results: (See Legend)	Comments:
Cylinder ☒ cw ☐ ccw Lug Set # 27	0003 Time	260.36 45°			45° LKDN	N/A	N/A	FILENAME SHOULD BE: H8258268
					45° LKUP	41	C	
	2/23/95 Date	259.02 60°	7.0	H8258271	60° LKDN	N/A	N/A	
					60° LKUP	56	C	
Lug Side ☐ cw ☒ ccw	MJS Examiner's Initials	257.70 ODCR	0.81 Index Arm Start	D-02/A	ODCR LKDN	N/A	N/A	
					ODCR LKUP	42	C	
Cylinder ☒ cw ☐ ccw Lug Set # 27	0100 Time	266.86 45°			45° LKDN	N/A	N/A	NONE
					45° LKUP	41	C	
	2/23/95 Date	265.52 60°	4.0	H8264271	60° LKDN	N/A	N/A	
					60° LKUP	56	C	
Lug Side ☐ cw ☒ ccw	MJS Examiner's Initials	264.20 ODCR	7.31 Index Arm Start	D-02/A	ODCR LKDN	N/A	N/A	
					ODCR LKUP	42	C	
Cylinder ☒ cw ☐ ccw Lug Set # 28	0200 Time	270.36 45°			45° LKDN	N/A	N/A	NONE
					45° LKUP	41	C	
	2/23/95 Date	269.02 60°	7.0	H8268277	60° LKDN	N/A	N/A	
					60° LKUP	56	C	
Lug Side ☐ cw ☒ ccw	MJS Examiner's Initials	267.70 ODCR	0.81 Index Arm Start	D-03/A	ODCR LKDN	N/A	N/A	
					ODCR LKUP	42	C	
Cylinder ☒ cw ☐ ccw Lug Set # 28	0235 Time	276.86 45°			45° LKDN	N/A	N/A	NONE
					45° LKUP	41	C	
	2/23/95 Date	275.52 60°	4.0	H8274281	60° LKDN	N/A	N/A	
					60° LKUP	56	C	
Lug Side ☐ cw ☒ ccw	MJS Examiner's Initials	274.20 ODCR	7.31 Index Arm Start	D-03/A	ODCR LKDN	N/A	N/A	
					ODCR LKUP	42	C	

CALIBRATION GAIN:

45° LKDN	N/A	60° LKUP	48
45° LKUP	25	ODCR LKDN	N/A
60° LKDN	N/A	ODCR LKUP	34

EXAMINATION RESULTS LEGEND:

A - NO RECORDABLE INDICATIONS
B - NON-GEOMETRIC INDICATIONS
C - NON-RELEVANT INDICATIONS
D - ACOUSTIC INTERFACE
E - INSIDE SURFACE GEOMETRY
F - OUTSIDE SURFACE
G - WELD DISCONTINUITY
H - WELD CROWN GEOMETRY
J - OTHER (SEE COMMENTS)

REMARKS: TEMPERATURE READING OBTAINED FROM CONTROL ROOM OF 103°.

[signature] EXAMINER	II LEVEL	2/23/95 DATE	GE INDEPENDENT REVIEW	DATE	
[signature] GE REVIEWED BY	III LEVEL	2-27-95 DATE	UTILITY REVIEW	DATE	PAGE: 12 OF: 17

FORM UT32_R0

GE Nuclear Energy

SHROUD ULTRASONIC EXAMINATION DATA SHEET (AUTOMATED with Smart 2000 OD Tracker)

SITE: NINE MILE POINT
UNIT: 1
PROJECT NO.: 1ETED

PROCEDURE NO.: UT-NMP-503V3
REVISION NO.: 0 (FRR#NMP-2)

REPORT NO.: R-001
DATA SHEET NO.: D-007
CALIBRATION SHEET NO.: C-001, C-002, C-003

Weld ID: H-8 Exam Surface: OD Crown Width: 1.5" (Approx)

Search Unit Separation (Front To Front): N/A Wo Location: X-DUCER FRONT @ DNST TOE

Position/ Set Up	Scan Time	Search Unit Start:	Total ° Scanned	File Name and Disk/Side:	Search Unit	Gain dB	Results: (See Legend)	Comments:
Cylinder ☒ cw ☐ ccw	0300 Time	280.36 45°			45° LKDN	N/A	N/A	NONE
Lug Set #					45° LKUP	41	C	
29	2/23/95 Date	279.02 60°	7.0	H8278287	60° LKDN	N/A	N/A	
					60° LKUP	56	C	
Lug Side ☐ cw ☒ ccw	MDS Examiner's Initials	277.70 ODCR	0.81 Index Arm Start	D-03/B	ODCR LKDN	N/A	N/A	
					ODCR LKUP	42	C	
Cylinder ☒ cw ☐ ccw	0345 Time	286.86 45°			45° LKDN	N/A	N/A	NONE
Lug Set #					45° LKUP	41	C	
29	2/23/95 Date	285.52 60°	4.0	H8284291	60° LKDN	N/A	N/A	
					60° LKUP	56	C	
Lug Side ☐ cw ☒ ccw	MDS Examiner's Initials	284.20 ODCR	7.31 Index Arm Start	D-03/B	ODCR LKDN	N/A	N/A	
					ODCR LKUP	42	C	
Cylinder ☒ cw ☐ ccw	0800 Time	311.79 45°			45° LKDN	N/A	N/A	SPECIAL SETUP- CW CYLINDER ON CW SIDE OF
Lug Set #					45° LKUP	41	C	CW LUG.
32	2/24/95 Date	310.45 60°	7.0	H8309319	60° LKDN	N/A	N/A	
					60° LKUP	56	C	
Lug Side ☒ cw ☐ ccw	CVH Examiner's Initials	309.13 ODCR	0.0 Index Arm Start	D-04/A	ODCR LKDN	N/A	N/A	
					ODCR LKUP	42	C	
Cylinder ☒ cw ☐ ccw	0832 Time	318.29 45°			45° LKDN	N/A	N/A	SPECIAL SETUP- CW CYLINDER ON CW SIDE OF
Lug Set #					45° LKUP	41	C	CW LUG.
32	2/24/95 Date	317.95 60°	7.0	H8316325	60° LKDN	N/A	N/A	
					60° LKUP	56	C	
Lug Side ☒ cw ☐ ccw	CVH Examiner's Initials	315.63 ODCR	6.5 Index Arm Start	D-04/A	ODCR LKDN	N/A	N/A	
					ODCR LKUP	42	C	

CALIBRATION GAIN:

45° LKDN	N/A	60° LKUP	48
45° LKUP	25	ODCR LKDN	N/A
60° LKDN	N/A	ODCR LKUP	34

EXAMINATION RESULTS LEGEND:

A - NO RECORDABLE INDICATIONS
B - NON-GEOMETRIC INDICATIONS
C - NON-RELEVANT INDICATIONS
D - ACOUSTIC INTERFACE
E - INSIDE SURFACE GEOMETRY
F - OUTSIDE SURFACE
G - WELD DISCONTINUITY
H - WELD CROWN GEOMETRY
J - OTHER (SEE COMMENTS)

REMARKS: TEMPERATURE READING OBTAINED FROM CONTROL ROOM OF 103°.

Charles Van Hecke	II	2-24-95			
EXAMINER	LEVEL	DATE	GE INDEPENDENT REVIEW	DATE	
[signature]	III	2-27-95			
GE REVIEWED BY	LEVEL	DATE	UTILITY REVIEW	DATE	PAGE: 13 OF: 17

FORM UT32_R0

GE Nuclear Energy

SHROUD ULTRASONIC EXAMINATION DATA SHEET (AUTOMATED with Smart 2000 OD Tracker)

SITE: NINE MILE POINT
UNIT: 1
PROJECT NO.: 1ETED

PROCEDURE NO.: UT-NMP-503V3
REVISION NO.: 0 (FRR#NMP-2)

REPORT NO.: R-001
DATA SHEET NO.: D-008
CALIBRATION SHEET NO.: C-001, C-002, C-003

Weld ID: H-8
Exam Surface: OD
Crown Width: 1.5" (Approx)
Search Unit Separation (Front To Front): N/A
Wo Location: X-DUCER FRONT @ DNST TOE

Position/ Set Up	Scan Time	Search Unit Start:	Total * Scanned	File Name and Disk/Side:	Search Unit	Gain dB	Results: (See Legend)	Comments:
Cylinder ☒ CW ☐ CCW	0910 Time	324.79 45°			45° LKDN	N/A	N/A	SPECIAL SETUP- CW CYLINDER ON CW SIDE OF
					45° LKUP	41	C	CW LUG.
Lug Set # 32	2/24/95 Date	323.45 60°	2.5	H8322327	60° LKDN	N/A	N/A	
					60° LKUP	56	C	
Lug Side ☒ CW ☐ CCW	CVH Examiner's Initials	322.13 ODCR	13.0 Index Arm Start	D-04/A	ODCR LKDN	N/A	N/A	
					ODCR LKUP	42	C	
Cylinder ☐ CW ☐ CCW	N/A Time	N/A 45°			45° LKDN	N/A	N/A	N/A
					45° LKUP	N/A	N/A	
Lug Set # N/A	N/A Date	N/A 60°	N/A	N/A	60° LKDN	N/A	N/A	
					60° LKUP	N/A	N/A	
Lug Side ☐ CW ☐ CCW	Examiner's Initials	N/A ODCR	N/A Index Arm Start	N/A	ODCR LKDN	N/A	N/A	
					ODCR LKUP	N/A	N/A	
Cylinder ☐ CW ☐ CCW	N/A Time	N/A 45°			45° LKDN	N/A	N/A	N/A
					45° LKUP	N/A	N/A	
Lug Set # N/A	N/A Date	N/A 60°	N/A	N/A	60° LKDN	N/A	N/A	
					60° LKUP	N/A	N/A	
Lug Side ☐ CW ☐ CCW	Examiner's Initials	N/A ODCR	N/A Index Arm Start	N/A	ODCR LKDN	N/A	N/A	
					ODCR LKUP	N/A	N/A	
Cylinder ☐ CW ☐ CCW	N/A Time	N/A 45°			45° LKDN	N/A	N/A	N/A
					45° LKUP	N/A	N/A	
Lug Set # N/A	N/A Date	N/A 60°	N/A	N/A	60° LKDN	N/A	N/A	
					60° LKUP	N/A	N/A	
Lug Side ☐ CW ☐ CCW	Examiner's Initials	N/A ODCR	N/A Index Arm Start	N/A	ODCR LKDN	N/A	N/A	
					ODCR LKUP	N/A	N/A	

CALIBRATION GAIN:

45° LKDN	N/A	60° LKUP	48
45° LKUP	25	ODCR LKDN	N/A
60° LKDN	N/A	ODCR LKUP	34

EXAMINATION RESULTS LEGEND:

- A - NO RECORDABLE INDICATIONS
- B - NON-GEOMETRIC INDICATIONS
- C - NON-RELEVANT INDICATIONS
- D - ACOUSTIC INTERFACE
- E - INSIDE SURFACE GEOMETRY
- F - OUTSIDE SURFACE
- G - WELD DISCONTINUITY
- H - WELD CROWN GEOMETRY
- J - OTHER (SEE COMMENTS)

REMARKS: TEMPERATURE READING OBTAINED FROM CONTROL ROOM OF 103°

Charles J. VanHecke	II	2-24-95		
EXAMINER	LEVEL	DATE	GE INDEPENDENT REVIEW	DATE
	III	2-27-95		
GE REVIEWED BY	LEVEL	DATE	UTILITY REVIEW	DATE

PAGE: 14 OF: 17

GE Nuclear Energy

ULTRASONIC CALIBRATION DATA SHEET
(AUTOMATED WITH *Smart 2000*)

SITE: NINE MILE POINT UNIT: 1

CALIBRATION SHEET NO.: C-001

PROJECT NO.: 1ETED

LINEARITY SHEET NO.: L-001

PROCEDURE NO.: UT-NMP-503V3 REVISION: 0 FRR: NMP-2

Instrument: R & D TECH / TOMOSCAN (Manufacturer / Model) — TTS10089119 (System Serial No.)

Search Unit: SIGMA (Manufacturer) — 3510-94025 (Serial No.) — (.4x.25)" (Size) — 2.25 MHz. (Freq.) — 45 / SHR (Angle/Mode) — 0.35" (Incident to wedge front)

Cable: RG 174 (Type) — 225' (Length) — 5 (No. of Connectors)

Calibration Standard: SHRD-040 (Serial No.) — SS (Material) — 1.5" (Thickness) — 85 °F (Temp.)

Thermometer: 145761 (Serial No.)

Couplant: DEMIN WATER (Type) — N/A (Batch No.)

CALIBRATION

ORIENTATION:	CIRC	CIRC
TYPE:	EDM ID NOTCH	EDM OD NOTCH
DEPTH:	0.75"	0.30"
AMPLITUDE:	80%	80%
SWEEP:	2.156"	4.390"
GAIN: (dB)	17	25

☐ TIME ☐ DEPTH ☒ METAL PATH

FIELD SIMULATOR: N/A S/N: N/A

REFLECTOR:	N/A	N/A
MAX AMPLITUDE:	N/A	N/A
SWEEP:	N/A	N/A
GAIN: (dB)	N/A	N/A

CALIBRATION VERIFICATION

	TIME	DATE	OPER.	COMP.	REPORT NO
INITIAL	14:45	02/18/95	MSS	H-8	R-001
VERIFIED					
VERIFIED					
VERIFIED					
VERIFIED					
FINAL	00:30	02/25/95	MSS	H-8	R-001

BASIC SETTINGS

1. DELAY: 0.6656 in
2. TIMEBASE: 6.6500 in
3. FREQUENCY: (MHz) 5
4. RATE: /S 20
5. UNITS: ☐ DISTANCE ☒ HALF PATH ☐ TIME
6. VELOCITY: 129881 in/s
7. SAMPLES: 512

PULSER / RECEIVER

1. MODE: ☒ PULSE ECHO ☐ THRU-TRANSMISSION
2. PULSER: P1 TO P1
3. VOLTAGE: (v) 400
4. WIDTH: (Ns) 240
5. FILTER: ☐ NONE ☐ 0.5 - 2 MHz ☒ 1 - 5 MHz ☐ 2 - 10 MHz ☐ 5 - 15 MHz
6. RECTIFICATION: ☐ NONE ☐ UNIPOLAR + ☐ UNIPOLAR - ☒ BIPOLAR
7. SMOOTHING: ☐ NONE ☐ FAST ☒ MEDIUM ☐ SLOW

EXAMINER	LEVEL	DATE	GE INDEPENDENT REVIEW	DATE	
GE REVIEWED BY	LEVEL	DATE	UTILITY REVIEW	DATE	

FORM UT-08 REV. 6

GE Nuclear Energy

ULTRASONIC CALIBRATION DATA SHEET
(AUTOMATED WITH *Smart 2000*)

SITE: NINE MILE POINT UNIT: 1 CALIBRATION SHEET NO.: C-002

PROJECT NO.: 1ETED LINEARITY SHEET NO.: L-002

PROCEDURE NO.: UT-NMP-503V3 REVISION: 0 FRR: NMP-2

Instrument: R & D TECH / TOMOSCAN (Manufacturer / Model) — TTS10089119 (System Serial No.)

Search Unit: SIGMA (Manufacturer) — 2298-94041 (Serial No.) — 2(.57x.23)" (Size) — 4 MHz. (Freq.) — 60 / L (Angle/Mode) — 0.43" (Incident to wedge front)

Cable: RG 174 (Type) — 225' (Length) — 10 (No. of Connectors)

Calibration Standard: SHRD-040 (Serial No.) — SS (Material) — 1.5" (Thickness) — 85 °F (Temp.)

Thermometer: 145761 (Serial No.)

Couplant: DEMIN WATER (Type) — N/A (Batch No.)

CALIBRATION

ORIENTATION:	CIRC	N/A
TYPE:	EDM ID NOTCH TIP	N/A
DEPTH:	0.75"	N/A
AMPLITUDE:	80%	N/A
SWEEP:	1.545"	N/A
GAIN: (dB)	48	N/A

☐ TIME ☐ DEPTH ☒ METAL PATH

FIELD SIMULATOR: N/A S/N: N/A

REFLECTOR:	N/A	N/A
MAX AMPLITUDE:	N/A	N/A
SWEEP:	N/A	N/A
GAIN: (dB)	N/A	N/A

CALIBRATION VERIFICATION

	TIME	DATE	OPER.	COMP.	REPORT NO
INITIAL	15:00	02/18/95	MDS	H-8	R-001
VERIFIED					
VERIFIED					
VERIFIED					
VERIFIED					
FINAL	00:35	02/25/95	MDS	H-8	R-001

BASIC SETTINGS

1. DELAY: 0.6667 in
2. TIMEBASE: 9.4160 in
3. FREQUENCY: (MHz) 6.25
4. RATE: /S 20
5. UNITS: ☐ DISTANCE ☒ HALF PATH ☐ TIME
6. VELOCITY: 229881 in/s
7. SAMPLES: 512

PULSER / RECEIVER

1. MODE: ☐ PULSE ECHO ☒ THRU-TRANSMISSION
2. PULSER: P2 TO P2
3. VOLTAGE: (v) 400
4. WIDTH: (Ns) 188
5. FILTER: ☐ NONE ☐ 0.5 - 2 MHz ☒ 1 - 5 MHz ☐ 2 - 10 MHz ☐ 5 - 15 MHz
6. RECTIFICATION: ☐ NONE ☐ UNIPOLAR + ☐ UNIPOLAR - ☒ BIPOLAR
7. SMOOTHING: ☐ NONE ☐ FAST ☒ MEDIUM ☐ SLOW

EXAMINER	LEVEL	DATE	GE INDEPENDENT REVIEW	DATE
[signature]	II	2/18/95		
GE REVIEWED BY	LEVEL	DATE	UTILITY REVIEW	DATE
[signature]	III	2-27-95		

FORM UT-38 REV. 5

GE Nuclear Energy

ULTRASONIC CALIBRATION DATA SHEET
(AUTOMATED WITH *Smart 2000*)

SITE: NINE MILE POINT UNIT: 1 CALIBRATION SHEET NO.: C-003

PROJECT NO.: 1ETED LINEARITY SHEET NO.: L-003

PROCEDURE NO.: UT-NMP-503V3 REVISION: 0 FRR: NMP-2

Instrument: R & D TECH / TOMOSCAN (Manufacturer / Model) — TTS10089119 (System Serial No.)

Search Unit: RTD (Manufacturer) — 94-720 (Serial No.) — 2(6x22)mm (Size) — 2 MHz. (Freq.) — ODCR (Angle/Mode) — 0.65" (Incident to wedge front)

Cable: RG 174 (Type) — 225' (Length) — 10 (No. of Connectors)

Calibration Standard: SHRD-040 (Serial No.) — SS (Material) — 1.5" (Thickness) — 85 °F (Temp.)

Thermometer: 145761 (Serial No.)

Couplant: DEMIN WATER (Type) — N/A (Batch No.)

CALIBRATION

ORIENTATION:	CIRC	N/A
TYPE:	EDM ID NOTCH TIP	N/A
DEPTH:	1.20"	N/A
AMPLITUDE:	80%	N/A
SWEEP:	0.331"	N/A
GAIN: (dB)	34	N/A

☐ TIME ☒ DEPTH ☐ METAL PATH

FIELD SIMULATOR: N/A S/N: N/A

REFLECTOR:	N/A	N/A
MAX AMPLITUDE:	N/A	N/A
SWEEP:	N/A	N/A
GAIN: (dB)	N/A	N/A

CALIBRATION VERIFICATION

	TIME	DATE	OPER.	COMP.	REPORT NO
INITIAL	15:15	02/18/95	MJS	H-8	R-001
VERIFIED					
VERIFIED					
VERIFIED					
VERIFIED					
FINAL	00:40	02/25/95	MJS	H-8	R-001

BASIC SETTINGS

1. DELAY: 0.8795 in
2. TIMEBASE: 5.1281 in
3. FREQUENCY: (MHz) 6.25
4. RATE: /S 20
5. UNITS: ☐ DISTANCE ☒ HALF PATH ☐ TIME
6. VELOCITY: 62598 in/s
7. SAMPLES: 512

PULSER / RECEIVER

1. MODE: ☐ PULSE ECHO ☒ THRU-TRANSMISSION
2. PULSER: P3 TO P3
3. VOLTAGE: (v) 400
4. WIDTH: (Ns) 240
5. FILTER: ☐ NONE ☐ 0.5 - 2 MHz ☒ 1 - 5 MHz ☐ 2 - 10 MHz ☐ 5 - 15 MHz
6. RECTIFICATION: ☐ NONE ☐ UNIPOLAR + ☐ UNIPOLAR - ☒ BIPOLAR
7. SMOOTHING: ☐ NONE ☐ FAST ☒ MEDIUM ☐ SLOW

EXAMINER	LEVEL	DATE	GE INDEPENDENT REVIEW	DATE
[signature]	II	2/18/95		
GE REVIEWED BY	**LEVEL**	**DATE**	**UTILITY REVIEW**	**DATE**
[signature]	III	2-27-95		

FORM UT-06 REV. 5

GE Nuclear Energy

ULTRASONIC INSTRUMENT QUALIFICATION

SITE: NMP UNIT: 1

PROJECT NO.: 1ETED

LINEARITY SHEET NO.: L-001

MFG.: R & D TECH MODEL.: TOMOSCAN

INSTRUMENT SERIAL NO.: TTS10089119

PROCEDURE NO.: GE-ADM-1001 REVISION: 0 FRR: N/A

CHANNEL: 1 INITIAL

EQUIPMENT

Block Identification: ROMPAS (Type) CAL-RHOM-018 (Serial No.)

Search Unit: SIGMA (Manufacturer) 3510-94058 (Serial No.)

(4x25)" (Size) 2.25 MHz (Freq.) 45/SHR (Angle/Mode)

SCREEN HEIGHT LINEARITY CHECK

% FSH Larger Signal	% FSH Smaller Signal *	
	Actual	Limits
100%	50.2	45 - 55%
90%	45.1	40 - 50%
80%	40%	35 - 45%
70%	35.3	30 - 40%
60%	30.2	25 - 35%
50%	27.5	20 - 30%
40%	20.0	15 - 25%
30%	15.3	10 - 20%
20%	10.2	5 - 15%

* The smaller signal must be within 50% of the larger signal within 5% FSH

AMPLITUDE CONTROL LINEARITY

Indication set at % of FSH	dB Control Change	Indication at FSH	
		Actual	Limits
80%	- 6 dB	40.8	32 - 48%
80%	-12 dB	20.8	16 - 24%
40%	+ 6 dB	79.6	64 - 96%
20%	+12 dB	78.9	64 - 96%

EXAMINER — LEVEL II — DATE 2/18/95

GE REVIEW — LEVEL III — DATE 2-27-95

UTILITY REVIEW — DATE

CHANNEL: 1 FINAL

EQUIPMENT

Block Identification: ROMPAS (Type) CAL-RHOM-018 (Serial No.)

Search Unit: SIGMA (Manufacturer) 3510-94058 (Serial No.)

(4x25)" (Size) 2.25 MHz (Freq.) 45/SHR (Angle/Mode)

SCREEN HEIGHT LINEARITY CHECK

% FSH Larger Signal	% FSH Smaller Signal *	
	Actual	Limits
100%	49.8	45 - 55%
90%	45.1	40 - 50%
80%	40%	35 - 45%
70%	35.3	30 - 40%
60%	30.2	25 - 35%
50%	25.1	20 - 30%
40%	20.0	15 - 25%
30%	15.2	10 - 20%
20%	10.2	5 - 15%

* The smaller signal must be within 50% of the larger signal within 5% FSH

AMPLITUDE CONTROL LINEARITY

Indication set at % of FSH	dB Control Change	Indication at FSH	
		Actual	Limits
80%	- 6 dB	40.2	32 - 48%
80%	-12 dB	19.6	16 - 24%
40%	+ 6 dB	80.0	64 - 96%
20%	+12 dB	79.4	64 - 96%

EXAMINER — LEVEL II — DATE 2/25/95

GE REVIEW — LEVEL III — DATE 2-27-95

UTILITY REVIEW — DATE

FORM UT-12 REV. 7

GE Nuclear Energy

ULTRASONIC INSTRUMENT QUALIFICATION

SITE: NMP UNIT: 1

PROJECT NO.: 1ETED

LINEARITY SHEET NO.: L-002

MFG.: R & D TECH MODEL.: TOMOSCAN

INSTRUMENT SERIAL NO.: TTS10089119

PROCEDURE NO.: GE-ADM-1001 REVISION: 0 FRR: N/A

CHANNEL: 2 INITIAL

EQUIPMENT

Block Identification: ROMPAS (Type) CAL-RHOM-018 (Serial No.)

Search Unit: SIGMA (Manufacturer) 3510-94058 (Serial No.)

(.4x.25)" (Size) 2.25 MHz. (Freq.) 45/SHR (Angle/Mode)

SCREEN HEIGHT LINEARITY CHECK

% FSH Larger Signal	% FSH Smaller Signal *	
	Actual	Limits
100%	48.5	45 - 55%
90%	44.0	40 - 50%
80%	40%	35 - 45%
70%	34.0	30 - 40%
60%	29.2	25 - 35%
50%	24.1	20 - 30%
40%	19.0	15 - 25%
30%	14.3	10 - 20%
20%	9.2	5 - 15%

* The smaller signal must be within 50% of the larger signal within 5% FSH

AMPLITUDE CONTROL LINEARITY

Indication set at % of FSH	dB Control Change	Indication at FSH	
		Actual	Limits
80%	- 6 dB	40.4	32 - 48%
80%	-12 dB	20.0	16 - 24%
40%	+ 6 dB	80.0	64 - 96%
20%	+12 dB	80.0	64 - 96%

EXAMINER — LEVEL II — DATE 2/18/95

GE REVIEW — LEVEL III — DATE 2-27-95

UTILITY REVIEW — DATE

CHANNEL: 2 FINAL

EQUIPMENT

Block Identification: ROMPAS (Type) CAL-RHOM-018 (Serial No.)

Search Unit: SIGMA (Manufacturer) 3510-94058 (Serial No.)

(.4x.25)" (Size) 2.25 MHz. (Freq.) 45/SHR (Angle/Mode)

SCREEN HEIGHT LINEARITY CHECK

% FSH Larger Signal	% FSH Smaller Signal *	
	Actual	Limits
100%	50.2	45 - 55%
90%	44.5	40 - 50%
80%	40%	35 - 45%
70%	34.5	30 - 40%
60%	29.8	25 - 35%
50%	24.0	20 - 30%
40%	19.2	15 - 25%
30%	14.9	10 - 20%
20%	9.6	5 - 15%

* The smaller signal must be within 50% of the larger signal within 5% FSH

AMPLITUDE CONTROL LINEARITY

Indication set at % of FSH	dB Control Change	Indication at FSH	
		Actual	Limits
80%	- 6 dB	41.0	32 - 48%
80%	-12 dB	19.5	16 - 24%
40%	+ 6 dB	80.6	64 - 96%
20%	+12 dB	78.8	64 - 96%

EXAMINER — LEVEL II — DATE 2/25/95

GE REVIEW — LEVEL III — DATE 2-27-95

UTILITY REVIEW — DATE

FORM UT-12 REV. 7

GE Nuclear Energy

ULTRASONIC INSTRUMENT QUALIFICATION

SITE: NMP UNIT: 1

PROJECT NO.: 1ETED

LINEARITY SHEET NO.: L-003

MFG.: R & D TECH MODEL.: TOMOSCAN

INSTRUMENT SERIAL NO.: TTS10089119

PROCEDURE NO.: GE-ADM-1001 REVISION: 0 FRR: N/A

CHANNEL: 3 INITIAL

EQUIPMENT

Block Identification: ROMPAS (Type) CAL-RHOM-018 (Serial No.)

Search Unit: SIGMA (Manufacturer) 3510-94058 (Serial No.)

(.4x.25)" (Size) 2.25 MHz. (Freq.) 45/SHR (Angle/Mode)

SCREEN HEIGHT LINEARITY CHECK

% FSH Larger Signal	% FSH Smaller Signal *	
	Actual	Limits
100%	50.0	45 - 55%
90%	45.0	40 - 50%
80%	40%	35 - 45%
70%	35.3	30 - 40%
60%	30.2	25 - 35%
50%	25.1	20 - 30%
40%	20.0	15 - 25%
30%	15.3	10 - 20%
20%	10.2	5 - 15%

* The smaller signal must be within 50% of the larger signal within 5% FSH

AMPLITUDE CONTROL LINEARITY

Indication set at % of FSH	dB Control Change	Indication at FSH	
		Actual	Limits
80%	- 6 dB	40.0	32 - 48%
80%	-12 dB	19.2	16 - 24%
40%	+ 6 dB	78.0	64 - 96%
20%	+12 dB	78.0	64 - 96%

EXAMINER — LEVEL II — DATE 2/18/95

GE REVIEW — LEVEL III — DATE 2-27-95

UTILITY REVIEW — DATE

CHANNEL: 3 FINAL

EQUIPMENT

Block Identification: ROMPAS (Type) CAL-RHOM-018 (Serial No.)

Search Unit: SIGMA (Manufacturer) 3510-94058 (Serial No.)

(.4x.25)" (Size) 2.25 MHz. (Freq.) 45/SHR (Angle/Mode)

SCREEN HEIGHT LINEARITY CHECK

% FSH Larger Signal	% FSH Smaller Signal *	
	Actual	Limits
100%	49.4	45 - 55%
90%	44.7	40 - 50%
80%	40%	35 - 45%
70%	34.7	30 - 40%
60%	29.8	25 - 35%
50%	24.8	20 - 30%
40%	19.4	15 - 25%
30%	14.9	10 - 20%
20%	9.8	5 - 15%

* The smaller signal must be within 50% of the larger signal within 5% FSH

AMPLITUDE CONTROL LINEARITY

Indication set at % of FSH	dB Control Change	Indication at FSH	
		Actual	Limits
80%	- 6 dB	41.0	32 - 48%
80%	-12 dB	20.4	16 - 24%
40%	+ 6 dB	80.0	64 - 96%
20%	+12 dB	80.2	64 - 96%

EXAMINER — LEVEL II — DATE 2/25/95

GE REVIEW — LEVEL III — DATE 2-27-95

UTILITY REVIEW — DATE

FORM UT-12 REV. 7

Nine Mile Point 1 - O.D. Tracker H8 Scan Plan

Nine Mile 1 - H8 Weld Total Effective Scan (all transducers pass area) (0 deg. to 360 deg.)	
Total Length Scanned (deg.):	136.56
Total Length Scanned (inch):	218.11
Total Percentage Scanned:	37.93%

Nine Mile 1 - H8 Weld Total Scan Area (any transducer passes area) (0 deg. to 360 deg.)	
Total Length Scanned (deg.):	163.16
Total Length Scanned (inch):	260.59
Total Percentage Scanned:	45.32%

Nine Mile Point 1 - O.D. Tracker H8 Scan Plan

(0 deg. to 180 deg.)

Lug	Lug Azimuth (deg)	Position Setup (deg)	Tool Azimuth (deg)	45 Start (deg)	45 End (deg)	60 Start (deg)	60 End (deg)	Creep Start (deg)	Creep End (deg)	Scan Start (deg)	Total Angle Scanned (deg)	Overlap (deg)
1	5.00	GUIDE ROD BRACKET, SHROUD LIFTING LUG & SPECIMEN HOLDER										
2	15.00											
3	25.00											
5	45.00	-2.15	42.85	39.55	46.55	38.21	45.21	36.89	43.89	0.00	7.00	0.00
5	45.00	-2.15	42.85	46.05	53.05	44.71	51.71	43.39	50.39	6.50	7.00	0.50
5	45.00	-2.15	42.85	52.55	54.55	51.21	53.21	49.89	51.89	13.00	2.00	0.50
7	65.00	CORE SPRAY DOWNCOMER										
8	75.00	+1.41	76.41	73.11	83.61	71.77	82.27	70.45	80.95	0.00	10.50	0.00
9	85.00	-2.15	82.85	83.11	94.36	81.77	93.02	80.45	91.70	3.56	11.25	0.50
10	95.00	-2.15	92.85	93.86	104.36	92.52	103.02	91.20	101.70	4.31	10.50	0.50
11	105.00	-2.15	102.85	103.86	114.36	102.52	113.02	101.20	111.70	4.31	10.50	0.50
12	115.00	-2.15	112.85	113.86	124.36	112.52	123.02	111.20	121.70	4.31	10.50	0.50
13	125.00	+2.16	127.16	123.86	134.36	122.52	133.02	121.20	131.70	0.00	10.50	0.50
13	125.00	+2.16	127.16	133.86	139.16	132.52	137.82	131.20	136.50	10.00	5.30	0.50
14	135.00	CORE SPRAY BILLOWS & GUIDE ROD BRACKET										
17	165.00	-0.66	164.34	161.04	168.04	159.70	166.70	158.38	165.38	0.00	7.00	0.00
17	165.00	-0.66	164.34	167.54	174.54	166.20	173.20	164.88	171.88	6.50	7.00	0.50
17	165.00	-0.66	164.34	174.04	176.54	172.70	175.20	171.38	173.88	13.00	2.50	0.50

0.50	Overlap on each end of scan (deg) - try to get as close to 0.5 as possible from picks of scan start and total angle scanned
15.56	Total Carriage Travel (deg)
-2.15	Scanner Offset for CW Cyl. Positioned on CCW side of CCW Lug (deg) NEGATIVE #
2.15	Scanner Offset for CCW Cyl. Positioned on CW side of CW Lug (deg) POSITIVE #
4.48	H8 Leading Transducer MEDIAN Offset from Center Line (deg) POSITIVE#
3.14	H8 Center Transducer MEDIAN Offset from Center Line (deg) POSITIVE#
1.82	H8 Trailing Transducer MEDIAN Offset from Center Line (deg) POSITIVE#
91.51	H8 Weld MEAN Outside Radius (inch)
1.60	MEDIAN Inches per degree
0.63	MEDIAN Degrees per inch

[Note: 'deg' units represent degrees on shroud]

[Note: 'Scan Start' is referenced from the physical limit of motion on the tool. The operator should not run the tool outside of the range 0.00 to 15.56 other than a one time motion control calibration. Repeatedly driving to the "hard-stops" will damage the tool.]

Nine Mile Point 1 - O.D. Tracker H8 Scan Plan

(180 deg. to 360 deg.)

Lug	Lug Azimuth (deg)	Position Setup (deg)	Tool Azimuth (deg)	45 Start (deg)	45 End (deg)	60 Start (deg)	60 End (deg)	Creep Start (deg)	Creep End (deg)	Scan Start (deg)	Total Angle Scanned (deg)	Overlap (deg)
19	185.00	GUIDE ROD BRACKET, SHROUD LIFTING LUG, SPECIMEN HOLDER, & CORE SPRAY DOWNCOMER										
20	195.00											
21	205.00											
22	215.00											
23	225.00											
23	225.00											
24	235.00											
26	255.00	+1.41	256.41	253.11	260.86	251.77	259.52	250.45	258.20	0.00	7.75	0.00
27	265.00	-2.15	262.85	260.36	270.86	259.02	269.52	257.70	268.20	0.81	10.50	0.50
28	275.00	-2.15	272.85	270.36	280.86	269.02	279.52	267.70	278.20	0.81	10.50	0.50
29	285.00	-2.15	282.85	280.36	290.86	279.02	289.52	277.70	288.20	0.81	10.50	0.50
30	295.00	SPECIMEN HOLDER & VIBRATION INSTRUMENTATION BRACKET										
31	305.00											
32	315.00	+0.09	315.09	311.79	319.79	310.45	318.45	309.13	317.13	0.00	8.00	0.00
32	315.00	+0.09	315.09	319.29	327.35	317.95	326.01	316.63	324.69	7.50	8.06	0.50
33	325.00	CORE SPRAY BILLOWS & GUIDE ROD BRACKET										
34	335.00											
35	345.00											

0.50	Overlap on each end of scan (deg) - try to get as close to 0.5 as possible from picks of scan start and total angle scanned
15.56	Total Carriage Travel (deg)
-2.15	Scanner Offset for CW Cyl. Positioned on CCW side of CCW Lug (deg) NEGATIVE #
2.15	Scanner Offset for CCW Cyl. Positioned on CW side of CW Lug (deg) POSITIVE #
4.48	H8 Leading Transducer MEDIAN Offset from Center Line (deg) POSITIVE#
3.14	H8 Center Transducer MEDIAN Offset from Center Line (deg) POSITIVE#
1.82	H8 Trailing Transducer MEDIAN Offset from Center Line (deg) POSITIVE#
91.51	H8 Trailing Transducer MEDIAN Offset from Center Line (deg) POSITIVE#
1.60	MEDIAN Inches per degree
0.63	MEDIAN Degrees per inch

[Note: 'deg' units represent degrees on shroud]

[Note: 'Scan Start' is referenced from the physical limit of motion on the tool. The operator should not run the tool outside of the range 0.00 to 15.56 other than a one time motion control calibration. Repeatedly driving to the "hard-stops" will damage the tool.]

NINE MILE UNIT 1 - SHROUD ROLLOUT

ACTUAL H8 CIRCUMFERENCIAL SCAN TOTAL: 45.32%

(BASED ON WHERE ANY TRANSDUCER PASSED AREA)

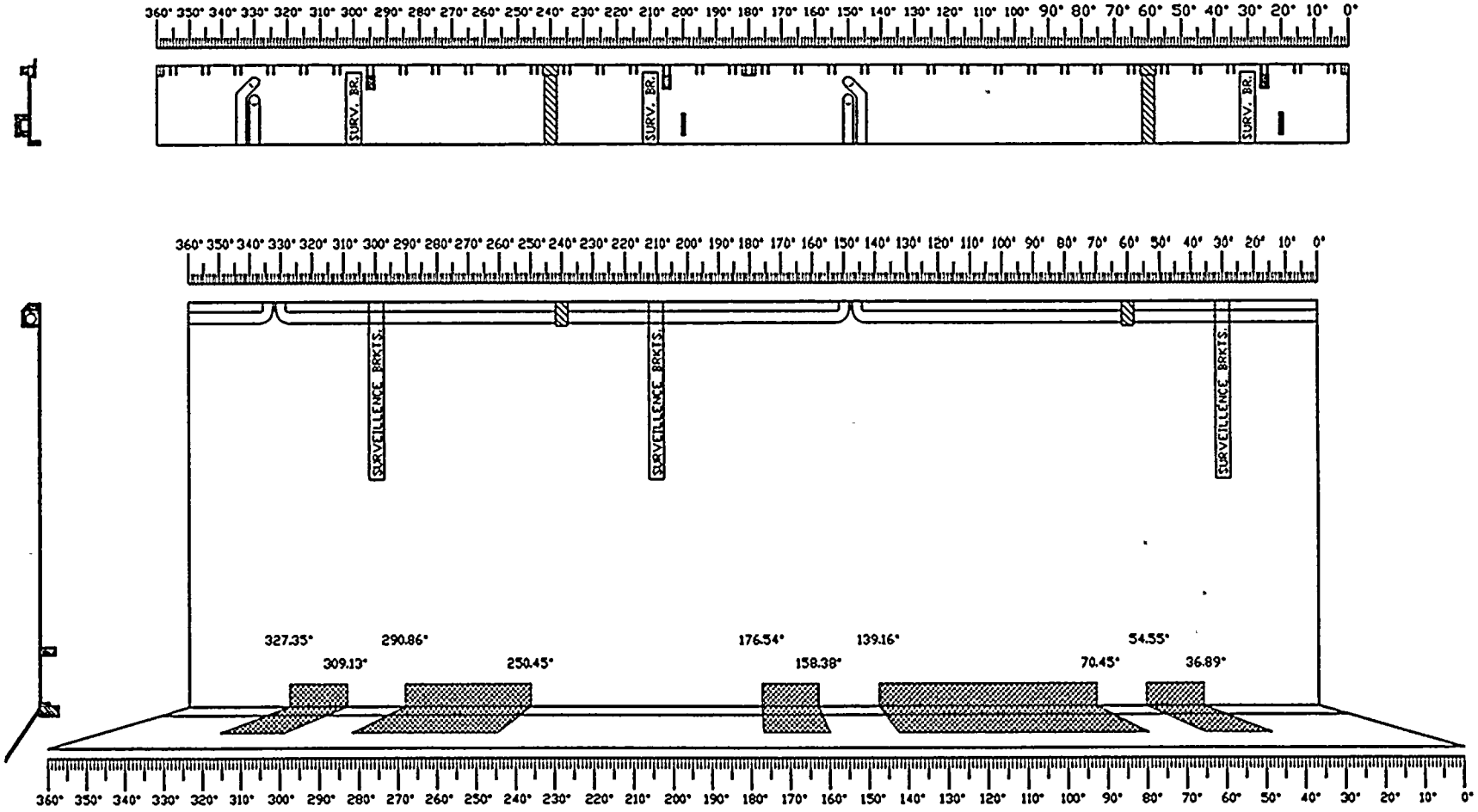

REV	DATE	PREPARED	REVIEWED	INIT.	APPROVED	INIT.	PURPOSE
0	2/17/95	JIM COLLINS	XXXXX		XXXXX		SHROUD ROLLOUT
1	2/20/95	JIM COLLINS					SHROUD ROLLOUT
2	2/25/95	JIM COLLINS					SHROUD ROLLOUT - FINAL COVERAGE OBTAINED

SKETCH RELEASE RECORD

NOTE: THIS SKETCH IS FOR ISI PROGRAM USE ONLY AND SHALL NOT BE USED FOR FABRICATION/INSTALLATION.

GE DRF NO.	PROJECT	TITLE	SKETCH NO.
	NMP1	SHROUD UT INSPECTION	NMP-01-ROLL

VESSEL TOP VIEW

H8 SCAN COVERAGE & INDICATION(S)

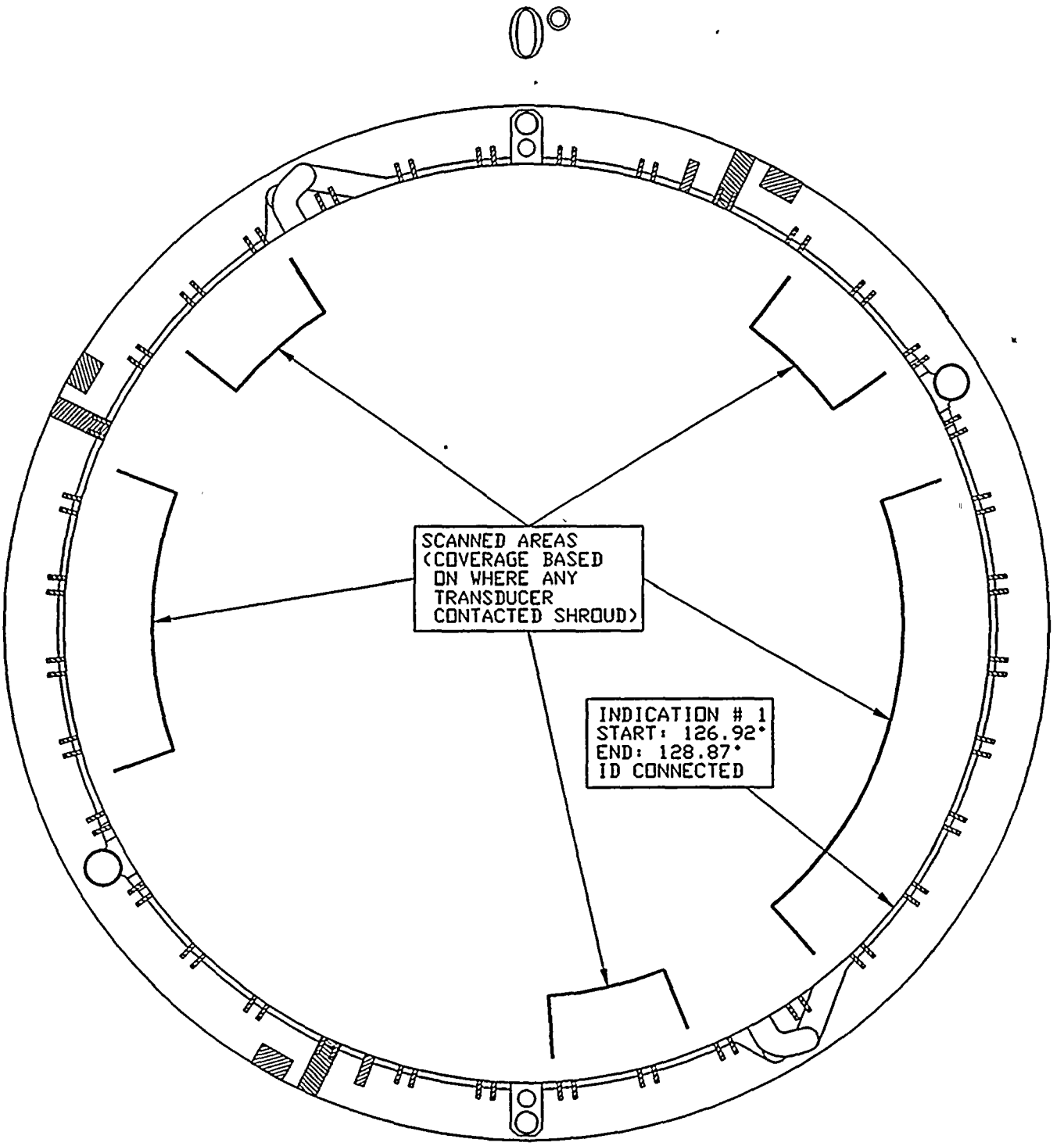

SKETCH NO. NMP-01-TPVW

TITLE SHROUD UT INSPECTION

PROJECT NMP1

CE DWG NO.

NOTE: THIS SKETCH IS FOR ISI PROGRAM USE ONLY AND SHALL NOT BE USED FOR FABRICATION/INSTALLATION.

SKETCH RELEASE RECORD

REV	DATE	PREPARED	REVIEWED	INIT.	APPROVED	INIT.	PURPOSE
0	02/19/95	JIM COLLINS	XXXXX		XXXXX		VESSEL & SHROUD TOP VIEW
1	02/20/95	JIM COLLINS	XXXXX		XXXXX		VESSEL & SHROUD TOP VIEW
2	02/25/95	JIM COLLINS					H8: FINAL COVERAGE & INDICATION LOCATION(S)

ATTACHMENT 3

GE Nuclear Energy

INVESSEL VISUAL EXAMINATION DATA SHEET

SITE: Nine Mile UNIT: 1 PROJECT NUMBER: 1ETED	CAMERA RESOLUTION	TYPE OF VISUAL EXAMINATION
	☐ .001" Diameter Wire ■ .0005" Diameter Wire ☐ 1/32" Black Line	☐ VT-1 ☐ DIRECT ☐ VT-3 ■ REMOTE ■ ENHANCED VT-1

Equipment Used During the Examination	
ETV-1250 Underwater Camera with twin 50's Super VHS Recorder	Procedure No. VT-NMP-201V0 Revision No. 0 FRR No. NMP-006

Component / Area Viewed	Description of Recordable Indications	Ind. No.	Accept	Reject	Film Footage
Resolution check			X		0:00:00
H8 335 ^{0} - 360^0 upper & lower HAZ	4 circ. cracks, upper HAZ (see page 2)	1,2,3,4		X	0:01:24
H8 240^0 - 180^0 upper HAZ			X		0:45:21
V10 @ 200^0 (ID exam)			X		1:03:44
V11 @ 110^0 (ID exam)			X		1:09:40
Unknown vertical weld (ID exam)	NOT CLEANED FOR INSPECTION		INFO ONLY		1:12:48
V9 @ 10^0 (ID exam)			X		1:16:24
Resolution check			X		1:24:20
H8 0^0 - 15^0 Upper and lower HAZ	1 circ crack, upper HAZ (see page 2)	5		X	1:25:20
H9 160^0 - 180^0			X		1:32:50
Search for V5 & V6 (ID)			INFO ONLY		1:44:20
Resolution check			X		1:56:22
					EOT

Examined by:	Level
Wayne Farrell	II
Dave Neau	II
Mike Armstrong	II
Kirk Robideau	II

Date Performed: February 23, 1995

COMMENTS: Welds cleaned prior to inspection

Reviewed [signature] Level III Date 3/2/95

Reviewed Ed [signature] Level III Date 3/6/95

Report Number 9509
Tape Number 95-09

NOTES:

1. NOT TO SCALE
2. MEASUREMENTS & degrees are approximate.
3. H8 weld toes are NOT visible

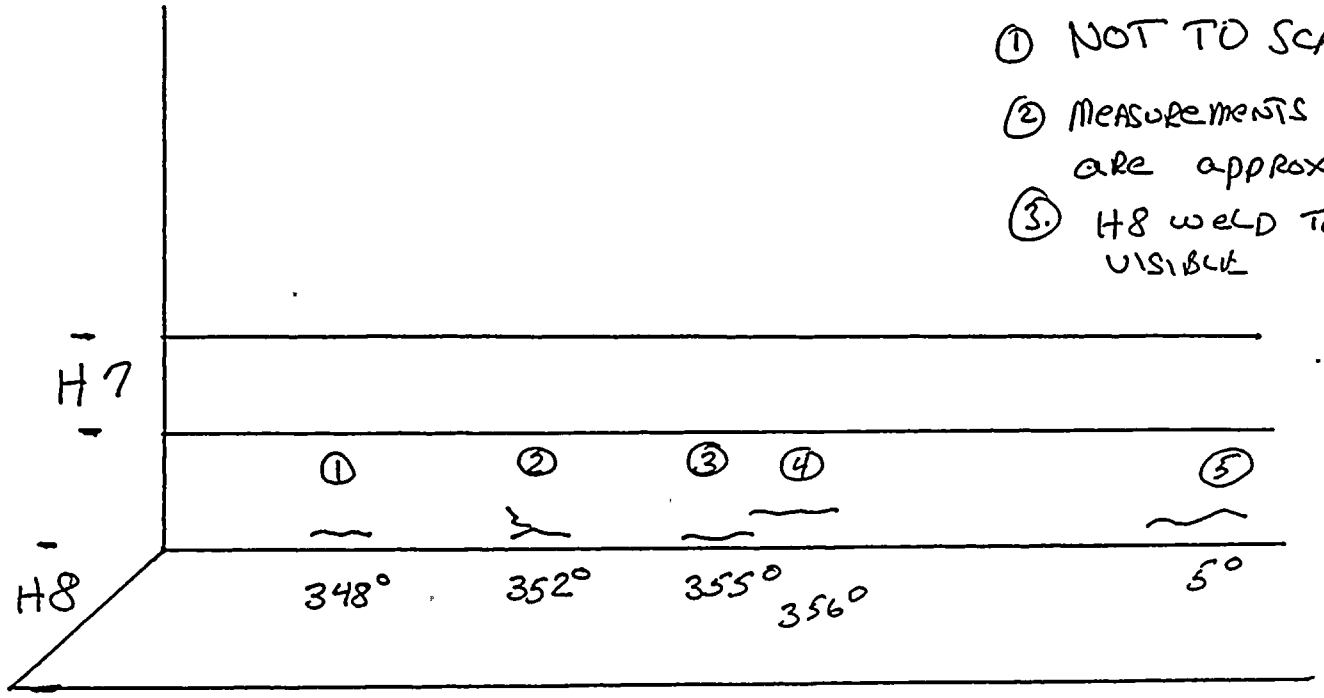

1. TAPE COUNT 00:31:00 ≈ .5" LONG
2. TAPE COUNT 00:33:00 ≈ .5" LONG
3. TAPE COUNT 00:38:00 ≈ .5" LONG
4. TAPE COUNT 00:30:03 ≈ .75" LONG
5. TAPE COUNT 00:28:00 ≈ .5" LONG

Report 95-09
Pg 2 of 2

Ted Stevens L-III 3/6/95

ATTACHMENT 4

GE Nuclear Energy

INVESSEL VISUAL EXAMINATION DATA SHEET

SITE: Nine Mile UNIT: 1 PROJECT NUMBER: 1ETED	CAMERA RESOLUTION ☐ .001" Diameter Wire ■ .0005" Diameter Wire ☐ 1/32" Black Line	TYPE OF VISUAL EXAMINATION ☐ VT-1 ☐ DIRECT ☐ VT-3 ■ REMOTE ■ ENHANCED VT-1
Equipment Used During the Examination ETV-1250 Underwater Camera with twin 50's Super VHS Recorder	Procedure No. VT-NMP-201V0 Revision No. 0 FRR No. NMP-006	

Component / Area Viewed	Description of Recordable Indications	Ind. No.	Accept	Reject	Film Footage
Resolution check			X		0:00:00
Weld H9 at 270^0			X		0:00:39
Resolution check			X		0:23:00
Weld H9 at 90^0 (RPV side)			X		0:23:29
Weld H9 at 90^0 (shroud side)			X		0:55:55
Resolution check			X		1:02:50
Weld H9 at 350^0 (RPV side)			X		1:03:44
Weld H9 at 350^0 (shroud side)			X		1:22:26
Resolution check			X		1:38:43
					EOT

Examined by: Level Wayne Farrell II Dave Neau II Date Performed: February 25, 1995	*COMMENTS:*
	Reviewed [signature] Level III Date 3/2/95 Reviewed Ed Steffen Level III Date 3/6/95 Report Number 9507 Tape Number 95-07

ATTACHMENT 5

GENERAL ELECTRIC CO.
San Jose, California

February 20, 1995

cc: Peter Walier
Sam Ranganath

Roy Corieri
Niagara Mohawk Power corporation
Nine Mile Point, Box 63
Lycoming, NY 13093

Subject: Core Shroud Inspections Supporting Repair

Reference: Letter to Mr. Tom Gleason, "Core Shroud Inspections Supporting Repair", dated February 15, 1995

Dear Roy:

The recommendations for the shroud weld inspections is provided below. Any suspected cracks or anomalies will be dispositioned by GE when they are reported.

1. Basis for H9 Weld Inspection

A VT-1 inspection is recommended for a 26 inch length of the exposed surface of the H9 weld adjacent to each lower support. Weld H9 is part of the load path from the tie rods to the reactor pressure vessel. The 26 inch weld length includes the weld adjacent to the two toggles (12 inches) plus an additional 7 inches on each side of the toggles. The additional 7 inches provides sufficient length for stress attenuation.

2. Basis for Vertical Weld Inspection

A VT-1 examination is recommended for a 6 inch length of vertical welds, V9, V10, V11 and V12, on the inside surface at the intersection of the H5 weld. The H5 weld is in a high radiation region and is susceptible to cracking. Finding acceptable welds in this region provides confidence that the other vertical weld are acceptable. The hoop stresses in the shroud sections are low and very little vertical weld is required to keep the sections cylindrical as required for the shroud repair design.

3. Recommendations for Top Guide Support Ring Inspection

A VT-1 inspection on the inside diameter of the two vertical welds (V5 and V6) in the top guide support ring is recommended. Structural integrity of this ring is required since it is a contributor to the overall shroud stiffness required to maintain preload.

T.E. Gleason
T.E. Gleason