C.D.I. Report No. 79-1

FSTF SHELL CONDENSATION OSCILLATION LOADING CORRECTION FACTORS - UNCORRELATED VENTS

Revision 2

by

D. B. Bliss and M. E. Teske

Continuum Dynamics, Inc.
32 Nassau Street
P.O. Box 3073
Princeton, New Jersey 08540

for

Nuclear Energy Division
General Electric Company
175 Curtner Avenue
San Jose, California 95125

under

Purchase Order 205-XC911

Approved

Alan J. Bilanin
President

AUGUST 1980

TABLE OF CONTENTS

NOMENCLATURE

a	radius of cylindrical torus
c	acoustic speed
c_n	series parameter defined in Equation 10
d	section length along a torus
D	half-length of a cylinder
$(\vec{e}_r, \vec{e}_\theta, \vec{e}_z)$	unit vectors in (r, θ, z) directions
f	frequency in Hz
F	transfer function
H	frequency response function
J_n	Bessel function
ℓ	segment length
ℓ_v	distance between segment stations
L	torus half-circumference length
m_n^j	jth stationary value of J_n, defined in Equation 5
n_s	number of segment circumferential stations
n_v	number of vents at each segment station
N	number of linear segments in a torus
p, P	pressure
q	normalized source strength, defined in Equation 35
$\vec{q}$	total velocity vector
Q	volume flow rate
r	radius
(r_v, θ_v, z_v)	cylindrical polar coordinates measured from a vent source
R	cross-correlation function
R_F	load reduction factor
S	power spectral density

t	time
(u,v,w)	velocity components in (r,θ,z) directions
z	distance along torus
α_n	wave solution parameter, defined in Equation 4
δ	Dirac delta function
θ	angle
ξ	coordinate transformation variable
ρ	density
ρ_c, ρ_{ij}	correlation coefficient
ω	frequency in radians/sec

SUPERSCRIPTS

$(\bar{\ })$	time average
$(\hat{\ })$	FSTF configuration
$(\tilde{\ })$	modified time average

EXECUTIVE SUMMARY

An analysis of measured downcomer pressure data in FSTF Run M8 was undertaken in the 0 - 50 Hz frequency range during condensation oscillation to assess the degree of randomness inherent in the vent dynamics. Correlation coefficients generated for these data indicate that the sources at the exits of the vents in the 0 - 50 Hz frequency range are random and uncorrelated except at 5 Hz and the 8 - 10 Hz frequency range, where the signals are strongly correlated. Condensation oscillation load reduction factors are developed which may be used to adjust FSTF PSD's of average shell pressure data to take credit for source randomization between vents and bays. It is shown that the PSD's of measured average bottom pressure data are conservative by nearly a factor of two (except at 5 Hz and the 8 - 10 Hz frequency range), without taking credit for reduced sound speed in water. The data is even more conservative for lower acoustic speeds in water. Correlation of the vent sources is shown to partially negate the PSD reduction factors. The PSD reduction factors which form the major result of this study are summarized in Figures 9 and 10.

I. INTRODUCTION

Examination of the correlation coefficients of FSTF downcomer pressure histories in the 0 - 50 frequency range during condensation oscillation indicates a lack of coherence among the condensation processes at the vent exits for most of this frequency range. Therefore, as a consequence of the "rigid" end caps installed in FSTF to end the bay, shell loadings measured in FSTF will be higher than loadings measured in a protypical plant. This is because, in FSTF, loads are measured as if all other bays are exactly in phase or are coherent with the bay modeled by FSTF. By demonstrating that in a given frequency range vents and hence bays are necessarily uncorrelated, load reduction factors may be developed to take credit for lack of coherence between bays. In this report an analysis of 15 seconds of FSTF Run M8, in the time interval 20 - 35 seconds of condensation oscillation data involving pressure transducers P5323, P5443, P5523, P5643, P5723 and P5843 on downcomers 3 through 8, is undertaken. Correlation coefficients are generated as a function of frequency for each unique pair of pressure signals. An analysis is then undertaken to develop load reduction factors which may be applied to the PSD's of the shell pressure field over the signal frequency range . Finally, the effect of correlation on the resultant PSD reduction factors is discussed.

II. EXAMINATION OF THE RANDOM NATURE OF FSTF SHELL LOADING

The mean square pressure signal at a containment wall from two vents with pressures $P_i(t)$ and $P_j(t)$ is given by

$$\overline{(P_i + P_j)^2} = \overline{P_i^2} + 2\overline{P_iP_j} + \overline{P_j^2}$$

where the overbar denotes a time average. If P_i and P_j are random and incoherent, then $\overline{P_iP_j} = 0$, $(i \neq j)$, and the correlation coefficient between the two vents is defined to be

$$\rho_c = \rho_{ij} = \frac{\overline{P_iP_j}}{\sqrt{\overline{P_i^2}}\sqrt{\overline{P_j^2}}} = 0$$

Thus the correlation $\overline{P_iP_j}$ indicates the amount of correlation in the signals from the two vents.

For the time period 20 - 35 seconds for FSTF run M8, the data from transducers on downcomers 3 through 8 near their exits was Fourier decomposed and then used to construct the mean square pressure signal components $\overline{(P_i + P_j)^2}$, $\overline{P_i^2} + \overline{P_j^2}$ and $\overline{P_iP_j}$ for each of the 15 unique downcomer pair combinations. These mean square quantities are calculated as a function band width with the band always starting at zero frequency (DC). As the higher frequency contributions are added to the signals, the amount of downcomer correlation is estimated by large rates of change with frequency of the $\overline{P_iP_j}$ signal. A representative result is shown in Figure 1 for the 0 - 50 Hz frequency range. Here the rapid rate of change in $\overline{P_5P_6}$ near 5 Hz, and a smaller change between 8 and 10 Hz, with perhaps a slight change at 17 Hz, indicate that these frequency regions are where the downcomer pressure signals during condensation oscillation are correlated. Figure 1 indicates that apart from these particular regions, and certainly for frequencies above 20 Hz, the correlation coefficient is well approximated by zero.

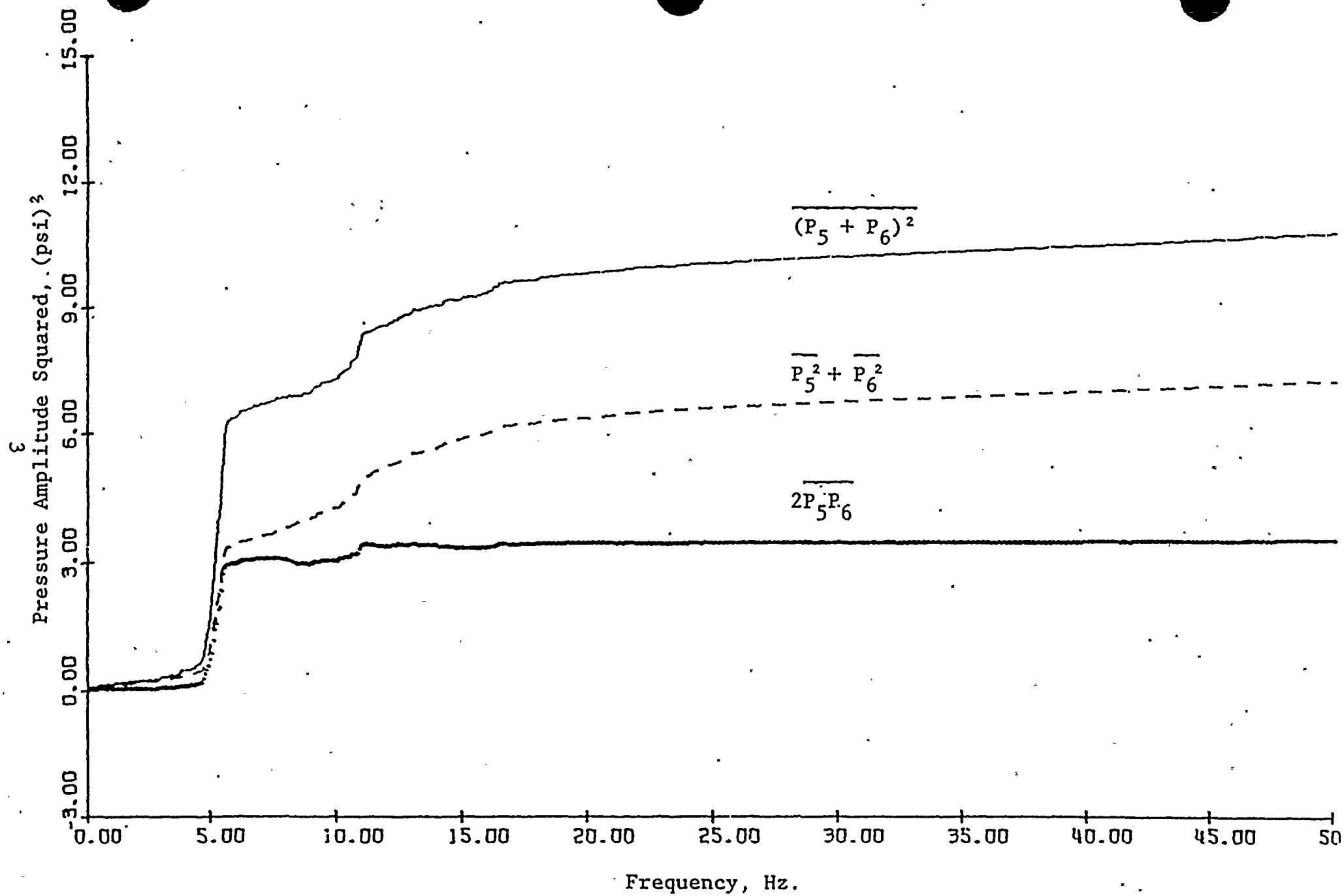

Figure 1: Mean Square pressure signals between downcomers 5 and 6, FSTF Run M8, 20 - 35 seconds, during condensation oscillation as a function of frequency bandwidth (measured from

Thus, since the condensation process at each vent is random and uncorrelated, the shell loading in a torus will be other than what is measured in FSTF because of the perfect reflection effect of the rigid wall end caps installed in the FSTF. A methodology is developed below to quantify the amount of conservatism which exists in the Mark I Condensation Oscillation loads as a consequence of the end cap effect.

One can speculate as to the origin of this random signal. Condensation oscillation is described as the highly periodic growth and collapse of a steam bubble at the exit of the vent. While the growth process has been observed to be closely in-phase among all vents, the collapse process (in particular, the final stages of collapse) is not. Apparently, local pool turbulence, steam water interface instabilities and buoyancy all contribute to the detailed collapse at the vent exit. It would not be surprising to find that the final stages of collapse are random and that the distribution of sizes of steam/air bubbles left in the pool are also random. An estimation of the bubble sizes required to produce a signal in the 20-50 Hz frequency range is consistent with what might be expected to occur at the vent exit.

III. ANALYSIS OF THE EFFECTS OF VENT CORRELATION ON PRESSURE LOADS IN FSTF

CONFIGURATION AND ASSUMPTIONS

Pressure pulsations occur as steam vents discharge beneath the water surface in a large half-filled toroidal vessel. The "torus" is of circular cross-section, with radius "a", and is constructed of "N" linear segments each having a centerline length "ℓ". The half-circumference is defined as $L = \frac{1}{2}N\ell$. In each segment, there are "n_s" circumferential stations, each separated by a distance "ℓ_v", with "n_v" vents located at each station. The pressure pulsations produce net vertical unsteady forces on the torus. The magnitude of these forces depends on the degree to which the pulsations from the various vent sources are correlated or uncorrelated. Unsteady loads were measured in a full scale test facility (FSTF) which resembles a portion of the torus enclosed by rigid end walls. It is desired to be able to transfer these test results to a full torus configuration, taking into account the different boundary conditions and the possible effects of source correlation.

In the analysis that follows, the pressure disturbances in the liquid are assumed to be governed by the simple wave equation. The walls of the vessel are assumed to be rigid and the water surface is modeled as a simple constant pressure boundary condition (therefore, gravitational waves are excluded). The torus is unwrapped and analyzed as a simple cylindrical geometry, so that the effects of curvature around the toroidal circumference are neglected. The fact that the torus closes on itself is taken into account through use of the proper boundary condition. The vents are modeled as simple point sources (delta functions) so that the local flow structure around the vent is ignored and only the net effect of mass addition and removal is considered. These assumptions lead to considerable simplifications in the analysis while still retaining the basic physics of interest and assuring a reasonable degree of computational accuracy.

FORMULATION FOR THE PRESSURE

The basis for the analysis is the solution of the wave equation in the half-filled cylinder of half-length "D" and radius "a", with cylindrical polar coordinates located as shown in Figure 2. A single vent source is located at the coordinates $(r_v, \theta_v, z=0)$. The distance "d" is a section length used to compute a net vertical force due to the unsteady pressure. The governing equation for the pressure is

$$\frac{\partial^2 p}{\partial r^2} + \frac{1}{r}\frac{\partial p}{\partial r} + \frac{1}{r^2}\frac{\partial^2 p}{\partial \theta^2} + \frac{\partial^2 p}{\partial z^2} - \frac{1}{c^2}\frac{\partial^2 p}{\partial t^2} = 0 \tag{1}$$

The associated boundary conditions for the geometry of Figure 2 are:

$$p(r,0,z,t) = p(r,\pi,z,t) = 0 \qquad 0 \le r \le a\ ,\ 0 \le z \le D \text{ (free surface)}$$

$$\frac{\partial}{\partial r} p(a,\theta,z,t) = 0 \qquad 0 \le \theta \le \pi\ ,\ 0 \le z \le D \text{ (hard wall)}$$

$$\frac{\partial}{\partial z} p(r,\theta,D,t) = 0 \qquad 0 \le r \le a\ ,\ 0 \le \theta \le \pi \text{ (hard wall)} \tag{2}$$

Using the method of separation of variables, the following general solution for harmonic time dependence is obtained:

$$p(r,\theta,z,t) = e^{i\omega t} \sum_{n=1}^{\infty} \sum_{j=1}^{\infty} c_{n_j} J_n(m_n^j \cdot \frac{r}{a}) \sin n\theta \, \frac{\cosh[\alpha_{n_j}(D-z)]}{\cosh[\alpha_{n_j} D]} \tag{3}$$

where

$$\alpha_{n_j} = \frac{1}{a}\sqrt{(m_n^j)^2 - (\frac{\omega a}{c})^2} \tag{4}$$

The quantity m_n^j is defined to be the jth stationary value of the Bessel function J_n, namely

$$\frac{d}{dr} J_n(m_n^j) = 0 \tag{5}$$

where, for instance, $m_1^1 = 1.84118$, $m_1^2 = 5.33144$, etc.

The form of the pressure as expressed by Eqs. (3) and (4) assumes

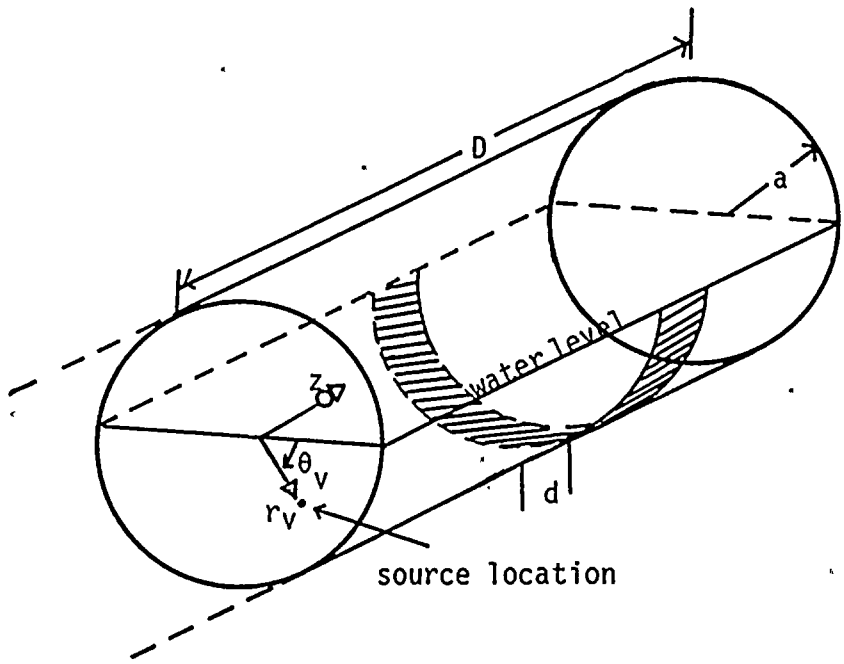

Figure 2. Basic Geometry for Calculating the Pressure.

α_{n_j} is real, namely $(\frac{\omega a}{c}) < m_n^j$. The solution is thus restricted to sufficiently low frequency that axial propagation of pressure disturbances does not occur. This is the case of physical interest, since if $a = 14$ ft and $c = 2500$ ft/sec the solution form is valid until a frequency $f = 52.33$ Hz. The solution above this frequency value has the property that pressure disturbances decay, essentially exponentially, away from the vent and are everywhere in phase.

The general solution will be specialized to the case of a single vent located at $(r_v, \theta_v, 0)$. The velocity field $\vec{q} = u\vec{e}_r + v\vec{e}_\theta + w\vec{e}_z$ can be calculated from the linearized momentum equation. For harmonic time dependence the z-component of velocity is

$$w = \frac{i}{\rho\omega}\frac{\partial p}{\partial z} \tag{6}$$

Substituting the general solution gives

$$w(r,\theta,z,t) = -\frac{ie^{i\omega t}}{\rho\omega}\sum_{n=1}^{\infty}\sum_{j=1}^{\infty} c_{n_j}\alpha_{n_j}J_n(m_n^j\frac{r}{a})\sin n\theta\,\frac{\sinh[\alpha_{n_j}(D-z)]}{\cosh(\alpha_{n_j}D)} \tag{7}$$

Now let the net volume flow rate from a vent be $Qe^{i\omega t}$. Since this quantity must equal the net volume flow through a cross-sectional plane located at $z = 0+$, the z-component of velocity due to the vent must be

$$w(r,\theta,0+,t) = \frac{Q}{2r_v a}\,\delta(\frac{r}{a} - \frac{r_v}{a})\,\delta(\theta-\theta_v)e^{i\omega t} \tag{8}$$

The factor of two in the denominator is necessary because only half the volume flow goes in the positive z-direction. Equating Eqs. (7) and (8) and using the orthogonality properties of both trigonometric and Bessel functions permits the determination of the coefficients of the series in the general solution for pressure, Eq. (3). After a lengthy calculation, the result is:

$$p(r,\theta,z,t) = ie^{i\omega t}\,\frac{2\rho\omega Q}{\pi a^2}\sum_{n=1}^{\infty}\sum_{j=1}^{\infty}\hat{c}_{n_j}\,\frac{J_n(m_n^j\frac{r}{a})}{J_n(m_n^j)}\sin n\theta\,\cosh[\alpha_{n_j}(D-z)] \tag{9}$$

where

$$\hat{c}_{n_j} = \frac{\sin n\theta_v}{\alpha_{n_j} \sinh[\alpha_{n_j} D]} \frac{J_n(m_n^j \frac{r_v}{a})}{J_n(m_n^j)} \left[\frac{(m_n^j)^2}{(m_n^j)^2 - n^2}\right] \tag{10}$$

The root mean square (rms) pressure can be obtained directly from the above expression. The result is equivalent to replacing the pressure and volume flow with their rms values, $\bar{p}$ and $\bar{Q}$ respectively, and omitting the factor $ie^{i\omega t}$, which is of unit magnitude, in Eq. (9). Specifically, the rms wall pressure is given by

$$\bar{p}(a,\theta,z) = \frac{2\rho\omega\bar{Q}}{\pi a^2} \sum_{n=1}^{\infty} \sum_{j=1}^{\infty} \hat{c}_{n_j} \sin n\theta \cosh[\alpha_{n_j}(D-z)] \tag{11}$$

To compare with the experimental data, it is necessary to express the result as an area-averaged vertical component of the rms pressure, defined as follows

$$\bar{p}_{av} \equiv \frac{1}{2ad} \int_{z-d/2}^{z+d/2} \int_0^{\pi} \bar{p} \sin\theta \, a d\theta dz \qquad \frac{d}{2} \leq z \leq D - \frac{d}{2} \tag{12}$$

The area "2ad" is the horizontal planform area of the shaded surface in Figure 2. The inequality condition is necessary to stay within the region of validity of the hyperbolic functions in the integrand. Substituting Eq. (11) into Eq. (12) gives the important result

$$\bar{p}_{av}(z) = \frac{\rho\omega\bar{Q}}{a^2 d} \sum_{j=1}^{\infty} K_j \cosh[\alpha_{1_j}(D-z)] \qquad \frac{d}{2} \leq z \leq D - \frac{d}{2} \tag{13}$$

where

$$K_j = \frac{\sin\theta_v}{\alpha_{1_j}^2} \frac{\sinh(\alpha_{1_j} \frac{d}{2})}{\sinh(\alpha_{1_j} D)} \frac{J_1(m_1^j \frac{r_v}{a})}{J_1(m_1^j)} \left[\frac{(m_1^j)^2}{(m_1^j)^2 - 1}\right] \tag{14}$$

and, from Eq. (4),

$$\alpha_{1_j} = \frac{1}{a}\sqrt{(m_1^j)^2 - (\frac{\omega a}{c})^2} \tag{15}$$

An interesting feature of the averaging process is that only the lowest circumferential harmonic (n=1) makes a net contribution to $\bar{p}_{av}$.

In parts of the analysis that follow, it is necessary to calculate the pressure contribution of a single source in the torus. Unfortunately, the inequality restriction on the argument "z" in Eq. (13) is very inconvenient in this case, since it prohibits certain relative locations of the source and the averaging area. It is therefore necessary to develop a more general expression without this restriction. Because the torus closes on itself, the pressure must be symmetric about both the source location and the reflection point half-way around the circumference. Setting $D = L$, the half-circumference, the definition of the pressure as given in Eq. (11) is extended as follows:

$$\begin{aligned} \bar{p}(a,\theta,z) &= \bar{p}(a,\theta,-z) \\ \bar{p}(a,\theta,L-\xi) &= \bar{p}(z,\theta,L+\xi) \end{aligned} \tag{16}$$

where $\xi = z-L$ is a coordinate with its origin at the reflection point. The averaging operation of Eq. (12) could be used now to obtain a vertical component of the rms pressure, $\bar{p}_{av_L}$, due to a single source averaged over a length d in the torus. Actually, the result can be developed more simply by a judicious application of Eq. (13). As shown in Figure 3, the symmetry of the torus causes the force on the area in the left-hand sketch to be the same as the sum of the forces on the two areas in the right-hand sketch. Using Eq. (13) to find the forces on these two areas, and adding the results to obtain the average vertical pressure for the entire averaging area gives:

$$\bar{p}_{av_L}(z) = \begin{cases} \tilde{p}_{av}(\frac{\tilde{d}}{2})\Big|_{\tilde{d}=\frac{d}{2}+z} + \tilde{p}_{av}(\frac{\tilde{d}}{2})\Big|_{\tilde{d}=\frac{d}{2}-z} & 0 \le z < \frac{d}{2} \\ \bar{p}_{av}(z)\Big|_{D=L} & \frac{d}{2} \le z \le L-\frac{d}{2} \\ \tilde{p}_{av}(L-\frac{\tilde{d}}{2})\Big|_{\tilde{d}=\frac{d}{2}+(L-z)} + \tilde{p}_{av}(L-\frac{\tilde{d}}{2})\Big|_{\tilde{d}=\frac{d}{2}-(L-z)} & L-\frac{d}{2} < z \le L \end{cases} \tag{17}$$

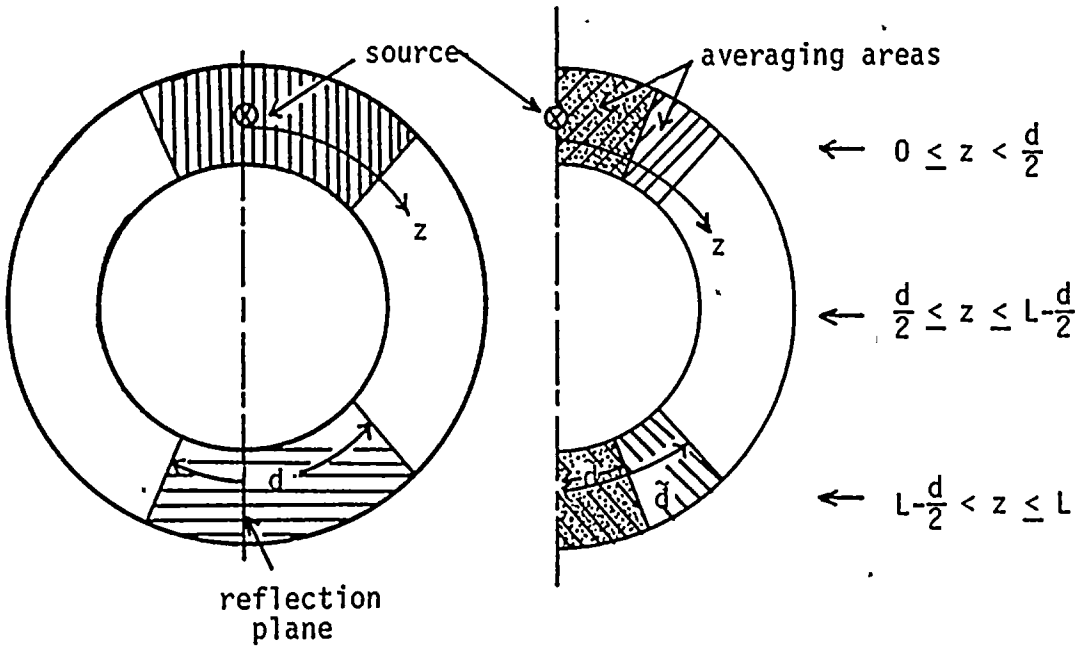

Figure 3. Geometry for Computing Average Pressure in a Torus.

The new function $\tilde{p}_{av}$ is a modification of Eqs. (13) and (14) in accordance with the areas shown in Figure 3, namely

$$\tilde{p}_{av}(\eta) = \frac{\rho\omega\bar{Q}}{a^2 d} \sum_{j=1}^{\infty} \tilde{K}_j \cosh[\alpha_{1j}(L-\eta)] \tag{18}$$

where

$$\tilde{K}_j = \frac{\sin\theta_v}{\alpha_{1j}^2} \frac{\sinh(\alpha_{1j}\frac{\tilde{d}}{2})}{\sinh(\alpha_{1j}L)} \frac{J_1(m_1^j \frac{r_v}{a})}{J_1(m_1^j)} \left[\frac{(m_1^j)^2}{(m_1^j)^2 - 1}\right] \tag{19}$$

Note that retaining the total averaging area "a^2d" in Eq. (18) provides correct weighting for the additional pressure contributions in Eq. (17).

The approach to be taken, using the results just developed, will first be summarized. Depending on the geometry, Eq. (13) or Eq. (17) can be used to relate the average vertical pressure to the volume flow rate (of source strength $\bar{Q}$) of a single vent. Thus, these equations can be used to relate the net average vertical pressure to the source strength in containment configurations with multiple vents (correlated or uncorrelated), such as FSTF. This result is achieved by suitably defining the dimensions "d" and "D", and by adding the source contributions in the appropriate manner. Given the $\bar{p}_{av}$ as a function of frequency (determined experimentally in FSTF), the corresponding function $\bar{Q}$ can be determined, assuming either that all vent sources are correlated or uncorrelated. The function $\bar{Q}$ can be used to predict $\bar{p}_{av}$ as a function of frequency in a toroidal vessel, assuming correlated, partly correlated, or uncorrelated sources.

DETERMINATION OF VENT SOURCE STRENGTH

Case 1: All Vents Correlated

Let the notation $(\hat{\ })$ denote the properties characterizing the FSTF. Figure 4 shows a schematic of the FSTF configuration which has a length "$\hat{\ell}$" between hard walls with $\hat{n}_v = 2$ vents at each of the $\hat{n}_s = 4$ vent stations. Assuming all vents are cor-

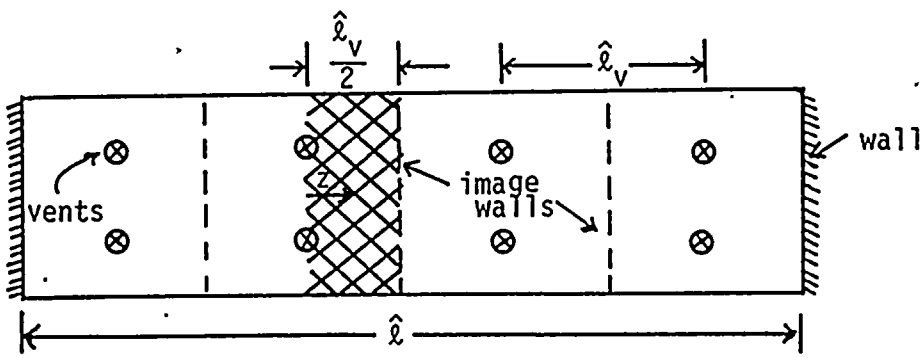

Figure 4. FSTF Geometry for Case 1: All Vents Correlated.

related, they form an image system equivalent to placing rigid walls at a distance $\hat{\ell}_v/2$ on each side of a single vent pair. The average vertical pressure component is the same below each vent. Thus, $\bar{p}_{av}$ is found using Eqs. (13) and (14) and setting $D = \hat{\ell}_v/2$, $d = \hat{\ell}_v/2$, $z = \hat{\ell}_v/4$, corresponding to the cross-hatched area in Figure 4. Since there are two vents at each station, the experimentally measured pressure in the FSTF is actually $\bar{p}_x = 2\bar{p}_{av}$. Making the substitutions into Eqs. (13) and (14) and solving for the source strength gives

$$\bar{Q}_1 = \bar{p}_x \frac{\hat{\ell}_v \hat{a}^2}{4\rho\omega} \left[\sum_{j=1}^{\infty} K_{j_1} \cosh[\alpha_{1j} \frac{\hat{\ell}_v}{4}] \right]^{-1} \tag{20}$$

where

$$K_{j_1} = \frac{\sin \hat{\theta}_v}{\alpha_{1j}^2} \frac{\sinh[\alpha_{1j} \frac{\hat{\ell}_v}{4}]}{\sinh[\alpha_{1j} \frac{\hat{\ell}_v}{2}]} \frac{J_1(m_1^j \frac{\hat{r}_v}{\hat{a}})}{J_1(m_1^j)} \left[\frac{(m_1^j)^2}{(m_1^j)^2 - 1} \right] \tag{21}$$

The subscript $(\ )_1$ indicates that this result applies to Case 1, all vents correlated.

Case 2: All Vents Uncorrelated

When n uncorrelated pressure signals $p_i(t)$ are added, the net rms level is

$$\bar{p} = \sqrt{\sum_{i=1}^{n} \bar{p}_i^2} \ . \tag{22}$$

For example, if there are only two pressure contributions

$$p^2 = (p_1(t) + p_2(t))^2 = p_1^2 + p_2^2 + 2p_1p_2 \ . \tag{23}$$

When the time average is taken to compute the mean square, the third term on the right averages to zero since p_1 and p_2 are uncorrelated. What remains corresponds to Eq. (22) for $n = 2$.

Equation (22) cannot be applied to the FSTF configuration without some additional consideration. Although the vent sources within

the facility are uncorrelated, the rigid end walls cause each source to have a correlated image system. A single source and its correlated image system is shown schematically in Figure 5. Formally, the contribution $\bar{p}_{av_i}$ of each source and its image system must first be found. The value of $\bar{p}_{av_i}$ must be based on $\hat{\ell}$, the length of the entire FSTF segment. The net value of $\bar{p}_{av}$ is then found by adding the uncorrelated contributions $\bar{p}_{av_i}$ according to Eq. (22). This procedure, which is straightforward but tedious, can be circumvented by reasoning from a different point of view.

If a single pulsating source is placed in an infinitely long cylinder, it produces a certain net vertical force. Suppose an infinite number of sources are placed in the cylinder in a periodic pattern to form the image system shown in Figure 5, with one source per length $\hat{\ell}$. Then the net force acting on the length $\hat{\ell}$ must be the same as the net force produced by a single source on the entire tube. In particular, the force on the segment is independent of the specific source location, as long as the sources are distributed to satisfy the image pattern. The conclusion is that each source in the segment makes the same contribution $\bar{p}_{av_s}$ independent of its location. If these sources were correlated, as in Case 1 above, their net contribution would be $8\bar{p}_{av_s}$. However, since these sources are uncorrelated, Eq. (18) gives their net contribution as $\sqrt{8}\bar{p}_{av_s}$. Since the source strength is linearly proportional to pressure, it follows that the strength of uncorrelated sources (Case 2) is

$$\bar{Q}_2 = \sqrt{8}\bar{Q}_1 = 2.8284\ \bar{Q}_1 \tag{24}$$

where $\bar{Q}_1$ is determined using Eqs. (20) and (21).

As a check on this reasoning, the same result was obtained by the formal method described earlier. The approach is summarized below, but the detailed derivation is omitted. Equations (13) and (14) were evaluated for the case $\hat{D} \to \infty$, namely a single source in an infinitely long cylinder. The contribution of each source and image system was obtained for each subsegment $\hat{\ell}_v$. The contribution of each source on the entire segment of length $\hat{\ell}$ was

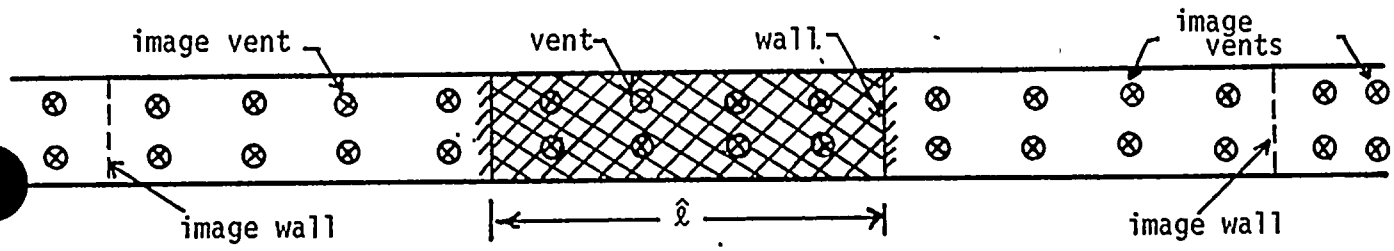

Figure 5. FSTF Geometry for Case 2: All Vents Uncorrelated.

determined, and indeed was found to be independent of source location. Finally, the source strength was found to be given by the following expression:

$$\bar{Q}_2 = \bar{p}_x \frac{\hat{\ell}_v \hat{a}^2}{\sqrt{2}\rho\omega} \left[\sum_{s=1}^{\infty} \sum_{j=1}^{\infty} K_{j\infty} e^{-\alpha_{1j}(2s-1)\hat{\ell}_v/2} \right]^{-1} \tag{25}$$

where

$$K_{j\infty} = \frac{\sin \hat{\theta}_v}{\alpha_{1j}^2} \sinh[\alpha_{1j} \frac{\hat{\ell}_v}{2}] \frac{J_1(m_1^j \frac{\hat{r}_v}{\hat{a}})}{J_1(m_1^j)} \left[\frac{(m_1^j)^2}{(m_1^j)^2 - 1} \right] \tag{26}$$

Numerical evaluation of these expressions shows the result to be identical to Eq. (24).

PREDICTION OF VERTICAL PRESSURE IN TORUS

Case I: All Vents Correlated

This case is similar to Case 1 discussed in the previous section. As indicated in Figure 6, the correlated vents form an image system equivalent to placing rigid walls at a distance $\ell_v/2$ on each side of the vent station. Therefore, in Eqs. (13) and (14) set $D = \ell_v/2$. Evaluation of $\bar{p}_{av}$ on the cross-hatched area is equivalent to setting $d = \ell_v/2$ and $z = \ell_v/4$. The net average vertical pressure component is thus

$$\bar{p}_{T_I} = n_v \bar{p}_{av} \left(\frac{\ell_v}{4}\right) \Bigg|_{\substack{D=\ell_v/2 \\ d=\ell_v/2 \\ \bar{Q}=\bar{Q}_1}} \tag{27}$$

where $\bar{p}_{av}$ and $\bar{Q}_1$ are given by Eqs. (13) and (20), respectively, and n_v is the number of vents at each station (Figure 6 shows $n_v = 2$).

A comment on using the source strengths as found in the previous section is now appropriate. The direct use of these source strengths is really only valid if the water in the vessel provides the same

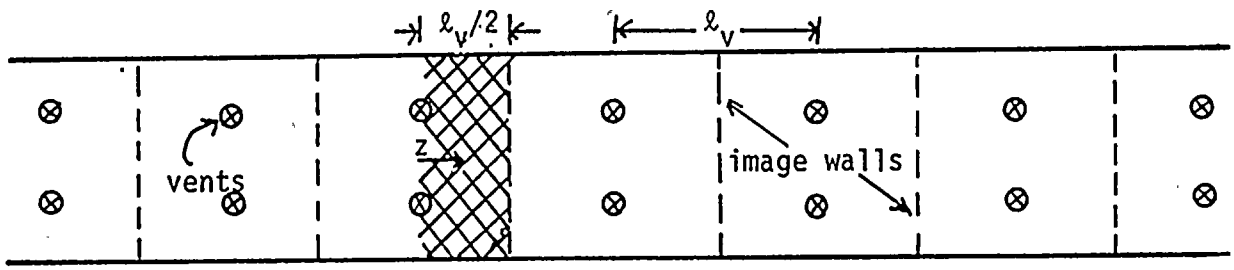

Figure 6. Unwrapped Torus Geometry for Case I: All Vents Correlated.

unsteady loading on the end of the vent in each case. This condition does not require that the geometry of the torus (radius, vent spacing, etc.) be identical to that of FSTF, but of course it is satisfied in that case. The point is that, in geometries that are substantially different, an additional source transfer procedure would improve accuracy. However, such a source transfer procedure cannot be readily performed without additional detailed calculations.

Case II: All Vents Uncorrelated

The geometry for this case is sketched in Figure 7. Since the vents are uncorrelated, the influence of each vent on a fixed area of the torus is first determined, and the contributions are then added according to Eq. (22). Since the torus closes on itself, half of the torus can be replaced by a reflection plane (rigid wall) directly across from the vent. Equations (17), (18) and (19) give the appropriate expression for the average vertical pressure in this case. The reflection from the plane of symmetry accounts for the second (longer) transmission path around the torus from the source to the point of evaluation. The effect of different sources on a fixed area is equivalent to the effect of a fixed source on different (equal) areas, since it is the distance between them that is important. The length over which the area averaging takes place is chosen to be $d = \ell$ the length of a segment. Referring to Eq. (17), the contribution of a source a distance $z = [s-\frac{1}{2}]\ell_v$, "s" an integer, from the center of the averaging area is $\bar{p}_{av_L}([s-\frac{1}{2}]\ell_v)\Big|_{\substack{d=\ell \\ \bar{Q}=\bar{Q}_2}}$ Because of the symmetry of the torus, there are two vent stations (on opposite sides) at this distance, and there are n_v vents at each station. Adding all such contributions according to Eq. (22) gives the Case II result:

$$\bar{p}_{T_{II}} = \sqrt{2n_v \sum_{s=1}^{N_s/2} \bar{p}^2_{av_L}([s-\tfrac{1}{2}]\ell_v)\Big|_{\substack{d=\ell \\ \bar{Q}=\bar{Q}_2}}} \tag{28}$$

where $N_s/2$ is the number of vent stations in half of the torus ($N_s = Nn_s$). The uncorrelated source strength $\bar{Q}_2$ is determined

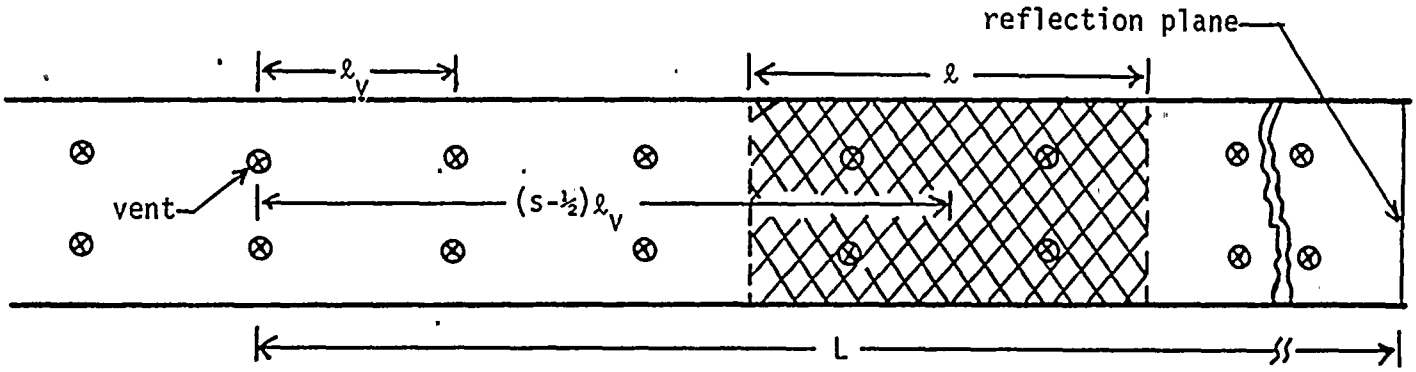

Figure 7. Unwrapped Torus Geometry for Case II: All Vents Uncorrelated.

by Eq. (24) or Eqs. (25) and (26).

It is also possible to arrive at a related result of some interest. The value of $\bar{p}_{T_{II}}$ averaged over the planform area of the entire torus, namely $d = 2L$, is easily deduced. A single vent produces a given net vertical force in the entire torus regardless of its location due to symmetry. This force can be found by dividing the correlated source (Case I) result by the total number of sources $N_s n_v = N n_s n_v$. However, by Eq. (24) the source strength $\bar{Q}_2 = \sqrt{8}\bar{Q}_1$ is to be used when all sources are uncorrelated. Thus, the contribution to the average vertical pressure of any one of the uncorrelated vents is $\sqrt{8}\bar{p}_{T_I}/N n_s n_v$, where the averaging area is the entire torus planform. Adding all the contributions according to Eq. (22) gives

$$\bar{p}_{T_{II_{\text{ENTIRE TORUS}}}} = \sqrt{\frac{8}{N n_s n_v}}\, \bar{p}_{T_I} \tag{29}$$

where $\bar{p}_{T_I}$ is given by Eq. (27). Because of the lack of correlation between segments, Eq. (29) always gives a lower value than Eq. (28).

Case III: Correlated Vents in Each Segment, Segments Uncorrelated

As an intermediate case between the two just considered, suppose that the vents in each segment are correlated, but that each segment is uncorrelated from the others. The averaging area is again chosen to be $d = \ell$, the segment length. The contribution of each segment of correlated sources on the averaging area is first determined, and then these uncorrelated segment contributions are added according to Eq. (22). This approach is illustrated schematically in Figure 8. The correlated pressure from a segment centered a distance $s\ell$, $s=1,\ldots,N/2-1$, away from the center of the averaging area is the sum of the individual pressures given by Eq. (17):

$$\bar{p}_s = n_v \sum_{\delta=1}^{n_s} \bar{p}_{av_L}\left(s\ell + \left[\frac{n_s+1}{2} - \delta\right]\ell_v\right)\Bigg|_{\substack{d=\ell \\ \bar{Q}=\bar{Q}_1}} \quad n_s \text{ even or odd} \tag{30}$$

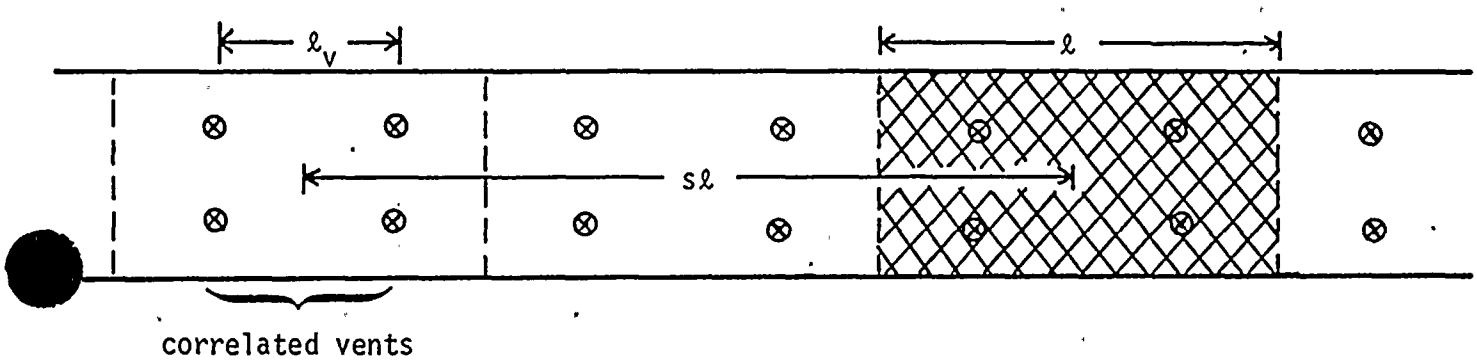

Figure 8 . Unwrapped Torus Geometry for Case III: Correlated Vents in Each Segment, Segments Uncorrelated.

where n_s is the number of stations in a segment and n_v is the number of vents at each station. The most reasonable choice of source strength seems to be $\bar{Q}_1$ since most adjacent sources are correlated and since a torus segment length is comparable to the length of FSTF. For the segment directly over the averaging area (s=0) the pressure is given by:

$$\bar{p}_o = 2n_v \sum_{\delta=1}^{n_s/2} \bar{p}_{av_L}([\delta-\tfrac{1}{2}]\ell_v)\Big|_{\substack{d=\ell \\ \bar{Q}=\bar{Q}_1}} \qquad n_s \text{ even} \tag{31}$$

Similarly, for the segment directly opposite the averaging area (s = N/2) the pressure is

$$\bar{p}_{N/2} = 2n_v \sum_{\delta=1}^{n_s/2} \bar{p}_{av_L}(L - [\delta-\tfrac{1}{2}]\ell_v)\Big|_{\substack{d=\ell \\ \bar{Q}=\bar{Q}_1}} \qquad n_s \text{ even} \tag{32}$$

Similar expressions for $\bar{p}_o$ and $\bar{p}_{N/2}$ may be derived for n_s odd. The special forms of Eq. (31) and (32) are necessary because the restriction $0 \leq z \leq L$ applies to Eq. (17). Because of the symmetry of the torus, the contribution of half the sources (those located within $0 \leq z \leq L$) can be doubled. Adding these uncorrelated pressures given the Case III result:

$$\bar{p}_{T_{III}} = \sqrt{\bar{p}_o^2 + 2\sum_{s=1}^{(N-2)/2} \bar{p}_s^2 + \bar{p}_{N/2}^2} \tag{33}$$

The factor of two before the summation sign accounts for the fact that there are two uncorrelated segments of equal distance on either side of the averaging area. Since Case III is a reduction in the degree of correlation as compared to Case I, Eq. (27), the following inequality always holds: $\bar{p}_{T_{III}} < \bar{p}_{T_I}$.

The related result for which the torus planform is the averaging area is easily deduced. The net vertical pressure of a single vent in the torus is the Case I result divided by the total number of

sources, namely $\bar{p}_{T_I}/Nn_s n_v$. The net pressure due to a segment having $n_s n_v$ correlated sources is therefore $\bar{p}_{T_I}/N$. Using Eq. (22) to add N such equal uncorrelated levels to account for all the segments gives

$$\bar{p}_{T_{III_{\text{ENTIRE TORUS}}}} = \frac{1}{\sqrt{N}} \bar{p}_{T_I} \tag{34}$$

Because the individual segments are uncorrelated, the level given by Eq. (34) is always less than that given by Eq. (33). Interestingly, comparing Eqs. (29) and (34), the Case II and III levels for the entire torus, shows these levels to be comparable although Case III should be higher. This reflects the fact that the choice of $\bar{Q}_1$ for the source strength in Case III is an approximation and that the value for a partially correlated case actually should be used.

IV. CALCULATION OF THE PSD LOAD REDUCTION FACTORS IN FSTF

The FSTF downcomer pressures have been shown earlier to be nearly uncorrelated in the 0 - 50 Hz frequency range, (except at 5 Hz and in the frequency range 8 - 10 Hz). The analysis then shows that for all of the vents uncorrelated within the bay, Eqs. (24), (20), and (21) are needed to determine the vent source strength, given the FSTF geometry. Once this source strength is obtained, the analysis for all vents uncorrelated, including the effects of all uncorrelated (image) bays, Eq. (28), results in the net average vertical pressure in a protypical plant. It is the purpose of this section to calculate the PSD reduction factors available by this analysis, before discussing the effect of partial correlation.

For the FSTF geometry, the normalized source strength for Case 2 may be determined by defining the quantity

$$\bar{q} = \frac{\rho\omega \sin \hat{\theta}_v}{2\hat{\ell}_v \hat{a}^2} \frac{\bar{Q}_2}{\bar{p}_x} \tag{35}$$

so that

$$\bar{q} = \left[\sqrt{8} \sum_{j=1}^{\infty} K_j \cosh[\alpha_{1j} \frac{\hat{\ell}_v}{4}] \right]^{-1} \tag{36}$$

with

$$K_j = \frac{1}{\alpha_{1j}^2} \frac{\sinh[\alpha_{1j} \frac{\hat{\ell}_v}{4}]}{\sinh[\alpha_{1j} \frac{\hat{\ell}_v}{2}]} \frac{J_1(m_1^j \frac{\hat{r}_v}{\hat{a}})}{J_1(m_1^j)} \left[\frac{(m_1^j)^2}{(m_1^j)^2 - 1} \right] \tag{37}$$

$$\alpha_{1j} = \frac{1}{a} \sqrt{(m_1^j)^2 - (\frac{\omega a}{c})^2} \tag{38}$$

and m_1^j is the zeros of the slope of J_1. Equations (36) and (37) are a rewriting of Eqs. (24), (20) and (21) appropriate for the definition in Eq. (35). Using these equations, the vent source strength $\bar{q}$ may be obtained; $\bar{q}$ is a function of the plant

geometry, frequency ω and sound speed c .

An application of Eqs. (13), (14), (17)-(19) and (28) to the equivalent FSTF plant (where $\hat{\ell} = 2\hat{\ell}_v$) yields the resultant average vertical pressure for Case II as

$$\frac{\bar{p}_{T_{II}}}{\bar{p}_x} = \bar{q}\sqrt{2\hat{n}_v \sum_{s=1}^{\hat{N}_s/2} \hat{p}^2_{av_L}\left([s-\tfrac{1}{2}]\hat{\ell}_v\right)} \tag{39}$$

where $\bar{p}_x$ is the experimentally determined pressure and

$$\hat{p}_{av_L}(\eta) = \begin{cases} \hat{p}_{av}\left(\frac{\hat{d}}{2}\right)\Big|_{\hat{d}=\hat{\ell}_v+\eta} + \hat{p}_{av}\left(\frac{\hat{d}}{2}\right)\Big|_{\hat{d}=\hat{\ell}_v-\eta} & 0 \le \eta < \hat{\ell}_v \\ \hat{p}_{av}(\eta)\Big|_{\hat{d}=2\hat{\ell}_v} & \hat{\ell}_v \le \eta \le \hat{L}-\hat{\ell}_v \\ \hat{p}_{av}\left(\hat{L}-\frac{\hat{d}}{2}\right)\Big|_{\hat{d}=\hat{\ell}_v+\hat{L}-\eta} + \hat{p}_{av}\left(\hat{L}-\frac{\hat{d}}{2}\right)\Big|_{\hat{d}=\hat{\ell}_v-\hat{L}+\eta} & \hat{L}-\hat{\ell}_v < \eta \le \hat{L} \end{cases} \tag{40}$$

$$\hat{p}_{av}(\eta) = \sum_{j=1}^{\infty} \hat{K}_j \cosh[\alpha_{1j}(\hat{L}-\eta)] \tag{41}$$

$$\hat{K}_j = \frac{1}{\alpha_{1j}^2} \frac{\sinh(\alpha_{1j}\frac{\hat{d}}{2})}{\sinh(\alpha_{1j}\hat{L})} \frac{J_1(m_1^j \frac{\hat{r}_v}{\hat{a}})}{J_1(m_1^j)} \left[\frac{(m_1^j)^2}{(m_1^j)^2 - 1}\right] \tag{42}$$

For the FSTF geometry,

$$\begin{aligned} \hat{n}_s &= 4 \\ \hat{n}_v &= 2 \\ \hat{N}_s &= 64 \\ \hat{\ell} &= 9.75 \text{ ft } (\hat{\ell}_v = 4.88 \text{ ft}) \\ \hat{a} &= 13.83 \text{ ft} \\ \hat{r}_v &= 7.21 \text{ ft} \quad (\hat{\theta}_v = 56.3°) \\ \hat{L} &= 156 \text{ ft} \end{aligned}$$

The square of the results of Eq. (39) yields the PSD reduction factors shown in Figure 9. Although the curves begin at 0 Hz, the reduction factor is strictly valid only in the frequency range where the sources are random and uncorrelated. The results are a function of the sound speed c and a function of frequency. The reduction factor is always less than 0.53.

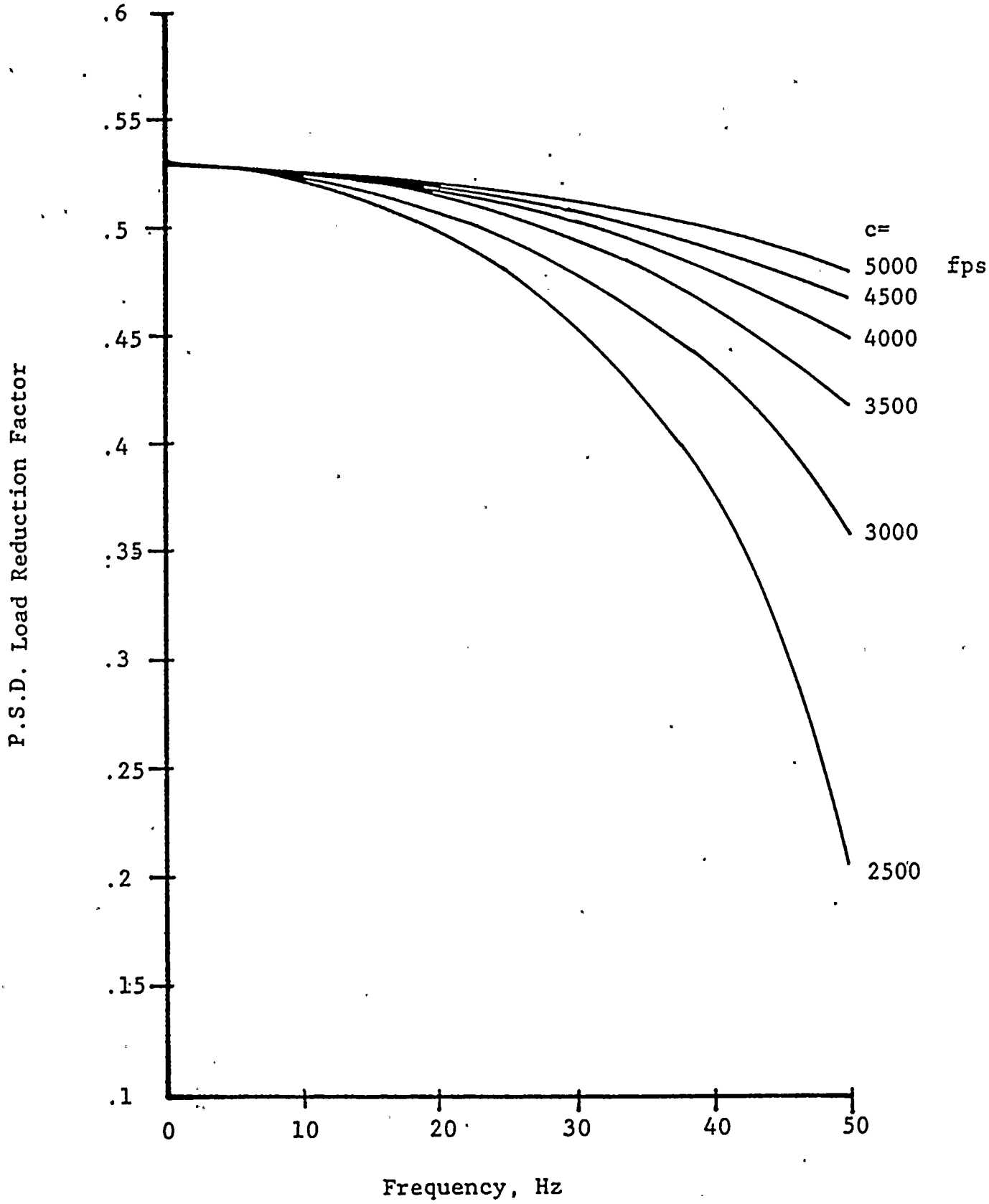

Figure 9: P.S.D. Reduction factor as a function of frequency for Uncorrelated Vents Case II in FSTF.

V. EFFECT OF PARTIAL CORRELATION BETWEEN VENTS

GENERAL APPROACH

So far in this report we have considered primarily the cases of perfect correlation or perfect uncorrelation between vents. In this section we examine the theoretical and practical limitations of partial correlation between vents.

The multivent FSTF/Plant configuration may be thought of as a linear system in which many time dependent inputs give a single time dependent output. The inputs in this case are the unsteady pressures in the steam vents. The linear system transfers these pressures to volume flow fluctuations at the ends of the vents and then converts these into averaged pressure fluctuations on the bottom of the torus. The output is the net fluctuating area-averaged pressure on a specified portion of the torus.

The frequency response function in the ith vent will be denoted by $H_i(\omega)$. The power spectral density of the input at the ith vent will be denoted by $S_{ii}(\omega)$, while the cross-spectral density of the ith and j^{th} vent will be denoted by $S_{ij}(\omega)$. The frequency response functions $H_i(\omega)$ depend on configuration geometry, size of the averaging area, and distance of the ith vent from the averaging area. The notation $(\ )^*$ will denote the complex conjugate. Thus, the power spectral density of the output is given formally by [1]

$$S_T(\omega) = \sum_{i=1}^{N} \sum_{j=1}^{N} H_i^*(\omega)\, H_j(\omega)\, S_{ij}(\omega) \tag{43}$$

The frequency response functions $H_i(\omega)$ may be assumed known. The transfer function between the vent volume source and the averaged bottom pressure was determined earlier in this report. (See Equations 13-15 and 17-19 for the result in general form). The transfer function between internal vent pressure and volume flow is actually not known (and really may not be entirely linear). However, since this function is the same in every vent,

[1] D.E. Newland, Random Vibrations and Spectral Analysis, Publisher: Longman, 1975. Chapter 7, Eq.(7.14) page 72.

and since ultimately the FSTF pressure data is used to infer torus pressures, this part of the frequency response function effectively cancels out.

The important point to observe in Eq. (43) is that to compute $S_T(\omega)$ in general requires a knowledge of not only all the spectral densities, but also all the cross-spectral densities. While it may reasonably be assumed that all the spectral densities $S_{ii}(\omega)$ are identical, such an assumption may not in general be applied to the cross-spectral densities. The cross-spectral density is given by the transform of the cross-correlation function:

$$S_{ij}(\omega) = \frac{1}{2\pi} \int_{-\infty}^{+\infty} R_{ij}(\tau) e^{i\omega\tau} d\tau \tag{44}$$

where

$$R_{ij}(\tau) = \overline{p_i(t) p_j(t + \tau)} \tag{45}$$

for input pressures $p(t)$.

The correlation coefficient for any two vents is defined as

$$\rho_{ij} = \frac{\overline{p_i(t) p_j(t)}}{\sqrt{\overline{p_i^2(t)}\ \overline{p_j^2(t)}}} = \frac{R_{ij}(0)}{\sqrt{\overline{p_i^2(t)}\ \overline{p_j^2(t)}}} \tag{46}$$

where $-1 \leq \rho_{ij} \leq 1$. Notice that specifying all the correlation coefficients does not in general provide enough information to calculate $S_T(\omega)$. In fact, two sets of inputs which are fundamentally different may have the same correlation coefficient but different cross-spectra, and thus produce a different system output. However, the correlation coefficient is useful when narrow frequency bands are considered, as will be discussed later.

RELATION TO RESULTS IN PREVIOUS SECTIONS

Earlier in the report, results were computed for two limiting cases of interest. In Case I all the vent pressures

have identical time histories so that all the spectra and cross-spectra are identical, namely $S_{ii}(\omega) = S_{ij}(\omega)$ for all i and j. Independent of this assumption, we may always write

$$H_i(\omega) = F(\omega)\hat{H}_i(\omega) \tag{47}$$

Here $F(\omega)$ is the complex transfer function across the vent steam/water interface, which is the same for all vents. The function $\hat{H}_i(\omega)$ is the transfer function from the vent to the torus wall; from Eq. (19), $\hat{H}_i(\omega) = \bar{P}_{avL}/\bar{Q}$. The analysis has shown that $\hat{H}_i(\omega)$ is real for frequencies below the acoustic cut-off frequency for the torus. The power spectral density of the pressure on the torus becomes:

$$S_T(\omega) = S_{11}(\omega)|F(\omega)|^2 \sum_{i=1}^{N} \sum_{j=1}^{N} \hat{H}_i(\omega)\hat{H}_j(\omega) \tag{48}$$

The double summation may be re-expressed to give the result

$$S_{T_I}(\omega) = S_{11}(\omega)\,|F(\omega)|^2 \left\{\sum_{i=1}^{N} \hat{H}_i(\omega)\right\}^2 \tag{49}$$

Equation (49) is the equivalent of the result for all vents perfectly correlated, called Case I and given by Eq. (27). The actual Case I result was obtained in a different and more convenient way by using an image method.

The other result obtained previously was for all vent pressures perfectly uncorrelated, namely $R_{ij}(\tau) = 0$ and $S_{ij}(\omega) = 0$ whenever $i \neq j$. All vent pressures were assumed to have identical power spectral densities, namely $S_{11}(\omega) = S_{ii}(\omega)$ for all i. Then Eq. (49) becomes

$$S_{T_{II}}(\omega) = S_{11}(\omega)|F(\omega)|^2 \sum_{i=1}^{N} \hat{H}_i^2(\omega) \tag{50}$$

This result is equivalent to the Case II result of Eq. (28), obtained by performing a summation equivalent to that given by Eq. (50).

Earlier in the report, the factor corresponding to $S_{11}(\omega)|F(\omega)|^2$ which appears in both Eqs. (49) and (50) was related to the wall pressures measured in FSTF for the cases of perfectly correlated and perfectly uncorrelated vents. It was then possible to predict torus wall pressures in terms of FSTF wall pressures. The torus diameter and vent geometry were assumed to be the same as in FSTF. Then if all sources are perfectly correlated, the wall pressures in the torus are the same as in FSTF. However, if all sources are uncorrelated, the wall pressures in the torus are lower than those in FSTF because the rigid end walls in FSTF produce correlated image sources. It was, therefore, possible to plot a power spectral density reduction factor as a function of frequency to show the effect of perfectly uncorrelated vent sources, Fig. 9.

EFFECT OF PARTIAL CORRELATION

When some degree of correlation exists between the input pressures from various vents, the problem becomes much more difficult. Equation (43) shows that all the cross-spectral densities in the torus must be known. These cannot be obtained from FSTF, except perhaps for adjacent vents. In particular, specifying just the correlation coefficients is not in general adequate unless the data is analyzed in narrow frequency bands. Even so, it is necessary to specify all the pairs of correlation coefficients. In the following analysis, the correlation coefficients of all possible vent pairs are assumed to be equal.

The spectral density and correlation function are a Fourier transform pair; thus, corresponding to Equation (44),

$$R_{ij}(\tau) = \int_{-\infty}^{+\infty} S_{ij}(\omega) e^{i\omega\tau} d\omega \tag{51}$$

It follows that for a very narrow bandwidth, $\Delta\omega$, the correlation function is approximately

$$R_{ij}(\tau) \approx S_{ij}(\omega) e^{i\omega\tau} \Delta\omega \tag{52}$$

where ω is interpreted as the band center frequency. Then

$$R_{ij}(0) = S_{ij}(\omega)\Delta\omega \tag{53}$$

Equation (46) may be rewritten first using Equation (45) and then Equation (53), to give

$$\rho_{ij} = \frac{R_{ij}(0)}{\sqrt{R_{ii}(0)R_{jj}(0)}} = \frac{S_{ij}(\omega)}{\sqrt{S_{ii}(\omega)S_{jj}(\omega)}} \tag{54}$$

Assuming that all vents have the same power spectral density gives

$$S_{ii}(\omega) = S_{jj}(\omega) \equiv S_{11}(\omega) \qquad i=j \tag{55}$$

The cross-spectral density is assumed to be the same between all vent pairs, so that for all i and j, not equal,

$$S_{ij}(\omega) \equiv S_c(\omega) \qquad i \neq j \tag{56}$$

Equations (55) and (56) represent the only assumptions that can reasonably be made without full scale tests on a complete torus geometry. Equations (54), (55) and (56) give

$$\rho_{ij} = \frac{S_{ij}(\omega)}{S_{ii}(\omega)} \tag{57}$$

which may also be expressed as

$$\rho_{ij} = \begin{cases} 1 & i=j \\ \rho_c & i \neq j \end{cases} \tag{58}$$

where

$$\rho_c \equiv \frac{S_c(\omega)}{S_{11}(\omega)} \tag{59}$$

The correlation coefficient ρ_c is common to all vent pairs.

It is now possible to find the load reduction factor as a function of ρ_c. The cases $\rho_c = 1$ and $\rho_c = 0$ have already been worked out when the FSTF and torus segment geometries are identical. There is no reduction for identical geometries when $\rho_c = 1$; Fig.9 gives the case $\rho_c = 0$. The power spectral density of the output is found by combining Equations (43), (47), (55) and (57):

$$S_T(\omega) = S_{11}(\omega)\,|F(\omega)|^2 \sum_{i=1}^{N} \sum_{j=1}^{N} \rho_{ij} \hat{H}_i(\omega) \hat{H}_j(\omega) \tag{60}$$

Next, using Equations (58) and rearranging the summation operations gives

$$S_T(\omega) = S_{11}(\omega)|F(\omega)|^2\left[\rho_c\left(\sum_{i=1}^{N}\hat{H}_i(\omega)\right)^2 + (1-\rho_c)\sum_{i=1}^{N}\hat{H}_i^2(\omega)\right] \tag{61}$$

A corresponding result applies to the FSTF geometry, where the transfer functions are now denoted by $\tilde{H}_i(\omega)$:

$$S_{FSTF}(\omega) = S_{11}(\omega)|F(\omega)|^2\left[\rho_c\left(\sum_{i=1}^{8}\tilde{H}_i(\omega)\right)^2 + (1-\rho_c)\sum_{i=1}^{8}\tilde{H}_i^2(\omega)\right] \tag{62}$$

where there are eight vents in FSTF.

The reduction factor of the torus pressure loads as compared to the FSTF loads is defined as

$$R_F(\rho_c,\omega) = \frac{S_T(\omega)}{S_{FSTF}(\omega)} \tag{63}$$

Substituting Equations (61) and (62) into the above then gives

$$R_F(\rho_c,\omega) = \frac{K_G\rho_c + (1-\rho_c)K_FK_c}{\rho_c + (1-\rho_c)K_c}$$

where

$$K_G = \frac{\left(\sum_{i=1}^{N}\hat{H}_i\right)^2}{\left(\sum_{i=1}^{8}\tilde{H}_i\right)^2} \tag{64}$$

and

$$K_c = \frac{\sum_{i=1}^{8}\tilde{H}_i^2}{\left(\sum_{i=1}^{8}\tilde{H}_i\right)^2} \tag{65}$$

and

$$K_F = \frac{\sum_{i=1}^{N}\hat{H}_i^2}{\sum_{i=1}^{8}\tilde{H}_i^2} \tag{66}$$

The above three constants have a simple physical interpretation.

By considering the limit $\rho_c = 1$, the constant K_G is seen to reflect the difference between the FSTF segment geometry and the torus segment geometry. It is, in fact, the ratio of mean square torus pressure to the mean square FSTF pressure when all sources are perfectly correlated in both cases. It is the square of the ratio of the Case I and Case 1 pressure results obtained earlier in this report. When the segment geometries are identical, as they are assumed to be in the calculations to obtain Fig. 9, $K_G = 1.0$.

The factor K_c is the ratio of the uncorrelated to correlated mean square pressures in FSTF given identical volume source strengths. Alternatively, it is the square of the ratio of the correlated to uncorrelated volume flow strengths, $\bar{Q}$, given the same pressure in both cases. From Equation (24), $K_c = 1/8$.

Finally, the factor $K_F = R_F(0,\omega)$, as can be seen by setting $\rho_c = 0$. Since $R_F(0,\omega)$ is just the reduction factor for all sources uncorrelated, it may be read directly from Fig. 9. Note, however, that Fig. 9 may be used only for identical segment geometries of the torus and FSTF, i.e., only when $K_G = 1$. New results for $R_F(0,\omega)$ must first be computed if the segment geometries are different.

Thus, for the purposes of this report, the power spectral density reduction factor takes on a relatively simple form:

$$R_F(\rho_c,\omega) = \frac{\rho_c + (1-\rho_c)R_F(0,\omega)/8}{\rho_c + (1-\rho_c)/8} \tag{67}$$

In the next paragraph, it is suggested that the restriction $0 \leq \rho_c \leq 1$ apply to this equation. This load reduction factor is plotted in Fig. 10 for several values of ρ_c assuming $c = 2500$ ft/sec. It may be seen that small values of ρ_c quickly increase the load reduction factor above the uncorrelated value $R_F(0,\omega)$.

Finally, the range of admissible values of ρ_c must be discussed. The only range of possible physical interest is $-1 \leq \rho_c \leq 1$.

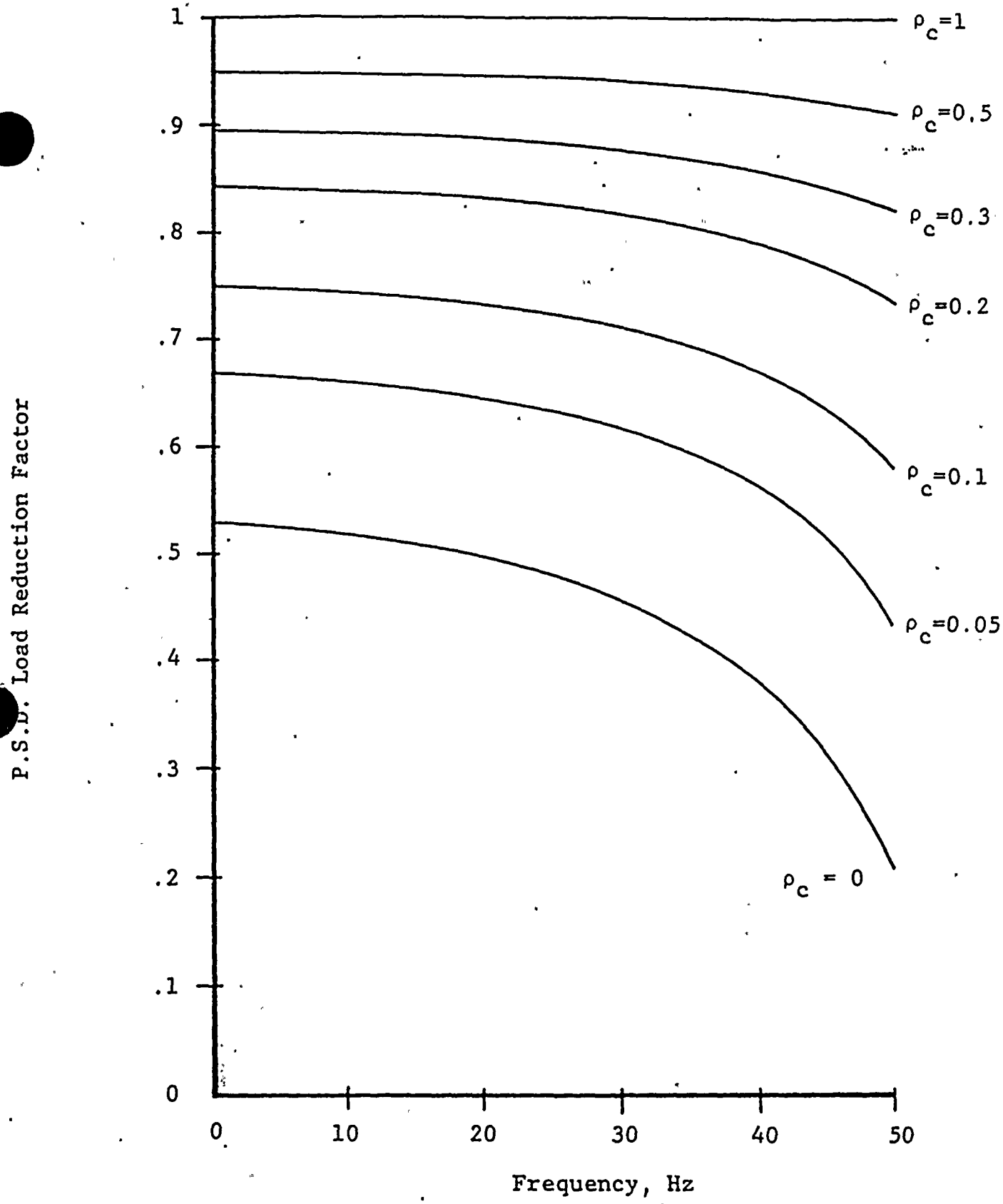

Figure 10: P.S.D. reduction factor as a function of frequency and correlation coefficient for an acoustic speed c = 2500 fps.

However, a further restriction is necessary. The function $R_F(\rho_c,\omega)$ given by Equation (67) approaches minus infinity as $\rho_c \to -1/7$ from above. Negative reduction factors for the power spectral density are clearly meaningless. For larger values of ρ_c, the function increases monotonically. At $\rho_c = -R_F(0,\omega)/(8-R_F(0,\omega))$, the reduction factor $R_F(\rho_c,\omega) = 0$. This behavior reflects the fact that it is not physically realistic to assume that all correlation coefficients are equal and negative. For instance, assuming $\rho_c = -1$ implies that all vent pair combinations are out of phase, which is physically impossible. Thus, although the analysis shows a value of ρ_c for which the reduction factor is zero, this result is suspect. It should be noted that very small reduction factors can also be achieved by judicious phasing of sources, in which case ρ_c is not the same for all vent pairs. In practice, however, these possibilities are too specific to warrant inclusion in an analysis of realistic reduction factors. Thus, Equation (67) should carry the restriction $0 \leq \rho_c \leq 1$.

ENCLOSURE A
TO NMP1L 0768

NINE MILE POINT - UNIT 1

SAFETY EVALUATION SUMMARY REPORT

1993

Docket No. 50-220
License No. DPR-63

Safety Evaluation No.: 83-044

Implementation Document No.: Mod. N1-81-29

UFSAR Affected Pages: VI-63 (Figure VI-24)

System: Emergency Ventilation

Title of Change: Modify BV 202-36 Pilot Solenoid Design

Description of Change:

This change replaced the solenoid pilot valves on air-operated blocking valve BV 202-36 with a different model, re-piped the air input to the solenoid valves in a series configuration (previously a parallel configuration), and installed a keylock switch in place of the original manual switch for the solenoid valves. Procedural controls will govern the use of the switch. Normally, the blocking valve will be left open. This will prevent the failure of initiation of the emergency ventilation system. Closure of the blocking valve will be allowed only during venting and purging of the drywell and suppression chamber or for maintenance reasons under procedural control.

Safety Evaluation Summary:

Automatic blocking valve BV 202-36 is at the junction or interface of the emergency ventilation and normal ventilation systems. The valve provides for purging the torus and drywell through the emergency ventilation system at the same time normal building ventilation is being used. The blocking valve prevents contaminated air from being blown back into the reactor building during this condition.

The new configuration of the air piping for the solenoids prevents single failure of the emergency ventilation system. The added procedural controls governing use of the keylock switch and maintaining the valve normally open assures the availability of the emergency ventilation system.

The modification will not affect the designed operation of the emergency ventilation system or the normal ventilation system. Venting and purging of the drywell and suppression chamber will not be affected except for the added procedural control.

Based on the evaluation performed, it is concluded that this change does not involve an unreviewed safety question.

Safety Evaluation No.: 89-026, Rev. 1

Implementation Document No.: Mod. N1-86-020

UFSAR Affected Pages: VI-43, VI-43a, VI-43b, VI-47 (Table VI-3a), VI-48 (Table VI-3a), VI-48a (Table VI-3a), VI-49 (Table VI-3b), VI-50 (Table VI-3b), VI-50a (Table VI-3b), VI-50b (Table VI-3b), VI-51 (Table VI-3c)

System: 201.1

Title of Change: Air-Operated Containment Vent & Purge Valves

Description of Change:

The NRC required NMPC to reduce the air-operated containment vent and purge valve isolation system response time to 15 seconds or less to assure that safety-related purge/vent valves would be closed before the onset of any potential fuel failure following a loss-of-coolant accident (LOCA). NMPC interpreted this requirement as the need to limit disc travel (i.e., valve closure) time to 14 seconds or less under LOCA conditions.

To meet the valve closure time requirement, Modification No. N1-86-020 removed speed control valves from vent and purge valves IV 201-08, 201-10, 201-16, and 201-32. Removal of the speed control valves reduced the line resistance, thus allowing air to exhaust in a shorter time and hence close the isolation valves more quickly.

To further reduce butterfly valve closure time for valves IV 201-10 and 201-32, quick exhaust valves (QEVs) were added to their air lines between the solenoid valves and the air operators. Quick exhaust valves are used in similar applications at Nine Mile Point Unit 1 and have performed their function satisfactorily.

Safety Evaluation Summary:

The analyses performed addressed the addition of QEVs to IV 201-10 and 201-32. The removal of the already wide open speed control valves from IV 201-08, 201-10, 201-16, and 201-32 was judged to have no impact on safety as they do not act as pressure or containment barriers/boundaries. Also, as the removal of the speed control valves resulted in one less component that

Safety Evaluation No.: 89-026, Rev. 1 (cont'd.)

Safety Evaluation Summary: (cont'd.)

potentially could fail, the probability of a malfunction of equipment important to safety is reduced.

Based on the analyses and evaluations performed, this modification (1) does not increase the probability of occurrence or consequences of an accident previously evaluated in the FSAR; (2) does not create the possibility of an accident of a different type than any evaluated previously in the FSAR; and (3) does not reduce the margin of safety as defined in the basis contained in the Technical Specifications. Therefore, it is concluded that this modification does not involve an unreviewed safety question.

Safety Evaluation No.: 89-029, Rev. 1 & 2

Implementation Document No.: Mod. N1-89-209

UFSAR Affected Pages: VI-58 (Figure VI-22); X-21

System: Head Spray

Title of Change: Partial Removal of the Head Spray Piping

Description of Change:

As reported in letter NMP1L 0589, dated June 28, 1991, the reactor head spray cooling system was eliminated by permanently removing the spool piece in the discharge line to the reactor vessel head. The remaining system piping was blind flanged (including the portion that contains the containment isolation valves).

This revision of the Safety Evaluation addressed Appendix J leak test requirements for the subject containment penetration. Isolation valves 34-01 and 34-02 are no longer subject to Appendix J Type C testing. The new blind flange is subject to Appendix J Type B testing for gasketed penetrations.

Safety Evaluation Summary:

The head spray system was not required to operate under any shutdown, cooldown, accident, or transient conditions. This flow path was also not required to satisfy Appendix R cold shutdown inventory makeup requirements.

Reactor isolation now occurs at the blind flange at the reactor vessel head. Containment isolation occurs at the blind flange inside the inboard check valve 34-02. Appendix J Type B and Type A testing of the blind flange assures that primary containment integrity is maintained.

Based on the evaluation performed, it is concluded that this change does not involve an unreviewed safety question.

Safety Evaluation No.: 89-030, Rev. 1

Implementation Document No.: Mod. N1-89-215

UFSAR Affected Pages: N/A

System: 125Vdc Battery Boards

Title of Change: Installation of Class 1E Fuses at 125Vdc Battery Boards #11 and #12

Description of Change:

This modification upgraded the equipment which feeds the loads powered from the 125Vdc battery boards #11 and #12. Originally, these loads were fed through circuit breakers. The modification replaced the breakers with fuses that are sized to clear a fault for the maximum available short circuit current.

This safety evaluation was previously reported in letter NMP1L 0512 dated June 29, 1990. Revision 1 of the safety evaluation revised the fuse interrupting rating (from 200KA ac/40KA dc to 25KA dc) and the applicable National Electric Code year (from 1987 to 1990).

Safety Evaluation Summary:

The revision to the Safety Evaluation does not affect the original conclusions. The deletion of the breakers and the addition of fuses will not increase the probability of occurrence of an accident previously analyzed in the UFSAR, nor will it decrease the margin of safety at Nine Mile Point Unit 1.

Replacement of the breakers with qualified fuses ensures that adequate short circuit interrupting capability is provided.

Based on the evaluation performed, it is concluded that this change does not involve an unreviewed safety question.

Safety Evaluation No.: 90-003, Rev. 1

Implementation Document No.: Calc. A-10.1-AA-26, Rev. 1

UFSAR Affected Pages: N/A

System: N/A

Title of Change: NMP1/NMP2 Helicopter Operations

Description of Change:

NMPC helicopter services provide local transportation between the site and surrounding areas including Syracuse Hancock Airport. This safety evaluation reviews the acceptability of this type of operation in the context of aircraft hazards. Helicopter operations involve approximately 45 to 60 flights per year between the Syracuse Airport and the site. The flight path usually does not encroach on the air space above the site security fence.

Safety Evaluation Summary:

There are currently three helicopter landing areas, all within approximately 0.5 miles of the site:

1. In the parking area, approximately 1200 ft. southeast of the Unit 2 reactor building.

2. In the parking area adjacent to the training center.

3. In the lawn area adjacent to the training center.

A calculation performed for Unit 2, based on the NRC Standard Review Plan 3.5.1.6 methodology, concluded that the actual probability of a helicopter accident leading to radiological consequences in excess of 10CFR100 limits would be less than about 10^{-7} per reactor year. A similar calculation was not performed for Unit 1. However, if such a calculation were performed for Unit 1 structures, the results would yield probabilities of the same order of magnitude as calculated for Unit 2. Therefore, helicopter operations do not represent a credible hazard to Unit 1 and need not be considered in the plant design basis. Based on the analyses and evaluations performed, it is concluded that NMPC helicopter operations do not constitute an unreviewed safety question.

Safety Evaluation No.: 90-006

Implementation Document No.: Mod. N1-89-255

UFSAR Affected Pages: VI-49 (Table VI-3b)

System: Drywell Inerting and Containment Atmospheric Dilution (201)

Title of Change: Modify Closure Time for Vent and Purge Motor-Operated Valves

Description of Change:

This change modified the motor operators on safety-related vent and purge isolation valves numbers 201-07, 201-17, 201-31 and 201-09, to reduce the stroke time for valve closure from less than 60 seconds to less than 30 seconds. Closing time reduction was accomplished by increasing motor power output and/or reducing the gear ratio to increase output rpm.

Safety Evaluation Summary:

This reduction in stroke time addresses concerns originally raised by the NRC per NRC Safety Evaluation, "Containment Purging/Venting During Normal Plant Operation," issued March 19, 1984; NRC Safety Evaluation, "Radiological Consequences Analysis of LOCA During Containment Purging," issued December 8, 1983; and final resolution of the issue reached via NMPC letter to NRC dated May 29, 1986. Specifically, the reduction in stroke time will reduce the consequences of a radiological release.

Upgrade of these safety-related valves was accomplished utilizing qualified Limitorque parts installed in the same configuration as originally existed. In addition, on valves 201-07 and 201-17, where motor size has been increased, calculations have concluded that existing conductors and breakers are adequate to handle the anticipated increased power loads.

The NRC accepted the new surveillance criteria associated with this change in License Amendment No. 140, dated April 12, 1993.

Safety Evaluation No.: 91-011

Implementation Document No.: DCR N1-91-001LS036

UFSAR Affected Pages: Figure IX-1

System: 24-kV Electrical System

Title of Change: Revise Figure IX-1 in NMP1 FSAR

Description of Change:

This change corrected a discrepancy involving the location of the termination between the auxiliary power station service transformer #10 cables and the 24-kV main generator output leads. Drawing C-19409-C Sheet 1B E21.1 originally showed the termination made at the main generator side of the links. The correct termination should be shown on the main transformer side of the links.

This safety evaluation is being reported at this time in support of the change to UFSAR Figure IX-1, which was incorporated in UFSAR Revision 10.

Safety Evaluation Summary:

This is a documentation-only change to properly reflect the as-built field configuration. The plant design basis, procedures, and analyses are not affected. The corrected termination location will not prevent cables feeding the station service transformer #10 from performing their intended function. The 24-kV electrical system is not safety related.

Based on the evaluation performed, it is concluded that this change does not involve an unreviewed safety question.

Safety Evaluation No.: 91-012, Rev. 1

Implementation Document No.: SC1-0093-91

UFSAR Affected Pages: VI-50 (Table VI-3b)

System: Postaccident Sampling (PAS)

Title of Change: Impact of Leaving Isolation Valves 63-04 and 63-05 Normally Open

Description of Change:

Isolation valves 63-04 and 63-05 are located in the discharge return line to the torus for the PAS system. These valves also provide a path for discharging fluid to the torus from relief valve 122.1-03. This relief valve serves as an overpressure protection device for the low pressure portion of the PAS system. This change revises the position of valves 63-04 and 63-05 from normally closed to normally open.

Safety Evaluation Summary:

Most of the PAS system is designed for the full reactor pressure of 1200 psig. However, the portion of this system between valves BV 122-05 and BV 122-06 is designed for 250 psig, and piping between safety valve 122.1-03 and isolation valve 63-05 is designed for 150 psig. Keeping valves 63-04 and 63-05 open will ensure proper operation of relief valve 122.1-03 and will ensure that the design pressure of this portion of the system is not increased as a result of leakage of valves isolating this portion of the system from the high reactor pressure.

Isolation valves 63-04 and 63-05 are open during normal plant operation when there is flow through the PAS system, and hence keeping these valves open during normal operation will not impact nuclear safety in a way not previously evaluated. Also, the reactor protection system will ensure closing of these valves during an accident condition.

Leakage of reactor coolant through the blocking valves into the PAS system piping is not considered significant, though contamination may slightly increase.

Based on the evaluation performed, it is concluded that this change does not involve an unreviewed safety question.

Safety Evaluation No.: 91-013, Rev. 1

Implementation Document No.: DCR N1-90-001LS935

UFSAR Affected Pages: X-46 (Figure X-9)

System: Instrument Air

Title of Change: Reconciliation of As-Built and Design Documentation for the Removal of Instrument Air Compressor/Intercooler (EPN 94-01, 02) Ball Valves

Description of Change:

This change deleted the ball valves that are shown on design drawings as being installed on the upstream side of each intercooler provided with instrument air compressors 94-01 and 94-02 (EPNs). These ball valves are indicated in the design documentation as being furnished and installed by the air compressor/intercooler vendor. However, during a recent plant walkdown, it was discovered that these subject ball valves were not installed.

Safety Evaluation Summary:

Deletion of the ball valves is a documentation-only change to reflect the as-built condition of the plant, and will not affect operation of the air compressor intercoolers. Review of the system operating and maintenance procedures indicates that these ball valves are not needed for system operation or maintenance. Alternate valves are installed and are used to provide positive equipment isolation for maintenance purposes.

Based on the evaluation performed, it is concluded that this change does not involve an unreviewed safety question.

Safety Evaluation No.: 91-015, Rev. 1

Implementation Document No.: Mod. N1-88-091

UFSAR Affected Pages: N/A

System: Motor-Generator (MG) Set

Title of Change: Modification Acceptance Test for Static Battery Chargers 161A and 171A (N1-STP-16)

Description of Change:

Special test procedure N1-STP-16 was generated to verify the operability of static battery chargers 161A and 171A, installed under Modification N1-88-091, as operational backups to the battery charging MG sets. The MG sets (one train at a time) were removed from service to allow the static battery chargers to maintain dc load and charge each battery. This required entry into a 24-hour limiting condition of operation (LCO) for each train per Technical Specification Section 3.6.3. A wiring change in each MG set control panel was also required to allow performance of the tests.

Safety Evaluation Summary:

The substitution of a static charger for a MG set during the test is functionally a one-for-one equipment substitution with equivalent electrical characteristics and greater reliability. The battery continues to be capable of supplying dc load throughout the test, and operation of the battery system remains the same regardless of whether the static battery charger or MG set is in service. Any dc transients that may occur during the test were evaluated and would not affect the MG set. If the static charger fails the acceptance for any reason and the MG set cannot be returned to service, the plant will be shut down in accordance with the Technical Specification LCO.

Based on the evaluation performed, it is concluded that this change does not involve an unreviewed safety question.

Safety Evaluation No.: 91-023

Implementation Document No.: Calcs. SO-TORUS-M009, SO-TORUS-M010, S14-81, S14-81-F009; GE Report GENE-770-91-34

UFSAR Affected Pages: VII-2, VII-11, VII-13a, VII-16, VII-18; XV-159, XV-160, XV-164, XV-166, XV-167, XV-169, XV-169a, XV-169b, XV-169c, XV-169d, XV-169e, XV-169f, XV-169g, XV-169h, XV-169i, XV-169j, XV-169k, XV-169L (F XV-60a), XV-169m (F XV-60b); XVI-104, XVI-114

System: Containment Spray

Title of Change: Heat Removal Capacity of the Containment Spray System Based on the Design Basis Reconstitution LOCA Suppression Chamber Temperature Response Analysis

Description of Change:

The original FSAR suppression chamber heatup analysis was performed between 1965 through 1968. Documentation of this analysis was not adequate to fully capture the original methods and assumptions. Therefore, the design basis reconstitution (DBR) analysis of the DBA LOCA suppression chamber heatup was performed using NRC-approved methods.

The DBR suppression chamber heatup analysis resolved four items, identified as problems, in the areas of (1) heat exchanger fouling, (2) maximum lake water temperature, (3) spray system flow requirements, and (4) decay heat calculation.

The DBR suppression chamber heatup analysis results were previously reported in letter NMP1L 0676, dated June 29, 1992, under Safety Evaluation 91-028, which specifically addressed the effects of increased lake water temperature.

Safety Evaluation Summary:

The DBR analysis evaluated the containment suppression chamber heatup assuming the containment spray system is operated in the

Safety Evaluation No.: 91-023 (cont'd.)

Safety Evaluation Summary: (cont'd.)

drywell and wetwell spray mode and also operated in accordance with the Emergency Operating Procedures (EOPs).

Results of the DBR analysis for 82°F lake temperature yielded a peak calculated suppression chamber temperature of 158.9°F if the following operability requirements are imposed:

1. Minimum downcomer submergence of 3.5 ft. and a maximum torus water temperature of 85°F.

2. The containment spray heat exchanger is initiated within 15 minutes post-LOCA.

3. Containment spray pump flow rate is 3600 gpm.

The DBR analysis results conclude that all design criteria associated with maximum torus water temperature are satisfied at the calculated peak temperature of 158.9°F.

The analysis included the effects of the increased peak torus temperature on the torus design, piping design conditions, Mark I loads, containment and core spray pumps NPSH and seal design, core cooling capability of core spray, and drywell and wetwell maximum pressures.

Based on the evaluation performed, it is concluded that the containment spray system continues to be operable. This change does not involve an unreviewed safety question.

Safety Evaluation No.: 91-025, Rev. 0, 1, & 3

Implementation Document No.: Calc. S14-81-F022, EOP ?

UFSAR Affected Pages: N/A

System: Core Spray

Title of Change: Assuring Adequate NPSH to the Core Spray Pumps During Long-Term Post-LOCA Operation After the Core is Covered by Removing Core Spray Topping Pumps from Service

Description of Change:

This change revised the emergency operating procedures (EOPs) to permit the core spray topping pumps to be removed from service during long-term postaccident cooling. This maneuver will lower system flow and help to assure that the core spray pumps have adequate net positive suction head (NPSH) and operate below the shockless capacity of the pumps. Operating at the lower flow rate will prevent possible accelerated erosion of the core spray pump impeller.

Safety Evaluation Summary:

The topping pumps will not be removed from service until the reactor vessel pressure has deteriorated (less than 30 psig) and the core is covered, and the only need for injection is to maintain level. The topping pump and its associated components will not be damaged in this mode of operation and the safety function of the core spray system will be satisfied. Removing the topping pump from service does not disable it permanently. If an operator feels the need to restart the topping pump, it can be reinitiated.

Based on the evaluation performed, it is concluded that this change does not involve an unreviewed safety question.

Safety Evaluation No.: 91-030

Implementation Document No.: DCR N1-91-800LG002

UFSAR Affected Pages: VII-26

System: Liquid Poison

Title of Change: Reconcile Licensing and Plant Documentation to Concur with Design Documentation and the As-Built Condition for the Liquid Poison System Pressure Relief Valves

Description of Change:

This change establishes the setpoint of the liquid poison system safety relief valves as 1500 psig ± 3% in accordance with the valve nameplate and ASME Section VIII Division 1 Part UG-133(f) - 1971 for tolerance. Also, the design discharge pressure of the liquid poison pumps is revised from 1500 psig to 1670 psig.

Safety Evaluation Summary:

The setpoint of 1500 psig ± 3% is appropriate to safely perform the function of these valves, which is to protect the pumps and associated piping from damage due to overpressure. The pumps are designed to operate and deliver their safety function flow for discharge pressures as high as 1670 psig. The associated piping has been qualified for pressures up to 1750 psig. The highest possible system pressure with the setpoint at 1500 psig ± 3% is 1638 psig, taking into account setpoint error, elevation head, backpressure and 3% accumulation.

Thus, the new setpoint will maintain pressures within ANSI(ASA)-B31.1-1955 limits.

Based on the evaluation performed, it is concluded that this change does not involve an unreviewed safety question.

Safety Evaluation No.: 91-037, Rev. 0, 1 & 2

Implementation Document No.: Temp. Mod. 5347

UFSAR Affected Pages: N/A

System: Radwaste Disposal

Title of Change: Temporary Modification 5347: Installation of (MFTDS) Filters and Demineralizers

Description of Change:

In order to facilitate the replacement of the #12 concentrator circulating pump (EPN 45-217), the modular fluidized transfer demineralization system (MFTDS) was installed to maintain the operability of the #12 concentrator portion of the radwaste system.

The MFTDS consisted of a series of four vessels (1 filter and 3 demineralizers) which diverted the effluent of waste concentrator #12 to the waste collector tank. This assembly was located in the Dow seamer and drum storage area, on the 261′ elevation of the waste building.

Safety Evaluation Summary:

The MFTDS was installed in accordance with established site procedures and meets the design requirements for the radwaste system. Process control instrumentation and periodic waste samples assure proper operation of the MFTDS. Personnel radiation exposures are maintained ALARA by the installation of shielding and by controlling access to the MFTDS equipment area. Rupture of a system hose during the filter/demineralizer process is bounded by a tank rupture as described in UFSAR Section XII-A.2.2. Any dispersed liquid from a hose leak can readily be recovered and processed through the floor drain system.

Based on the evaluation performed, it is concluded that this temporary change does not involve an unreviewed safety question.

Safety Evaluation No.: 91-040, Rev. 1

Implementation Document No.: Simple Design Change SC1-0266-91

UFSAR Affected Pages: VIII-38 (Figure VIII-14), VIII-39

System: In-core Monitoring

Title of Change: APRMs 11-18 Scram/Rod Block Setpoint

Description of Change:

This change revised the flow-biased rod block and scram setpoints for average power range monitors (APRMs) R102A through D from 107% and 118.5% to 106% and 116%, respectively. This setpoint revision was required since the calibration frequency of APRM flow units R103A through D was revised from once a month to once every 3 months per Technical Specification Amendment No. 130. Revising the calibration frequency for the flow units affects these setpoints since the APRMs receive their flow-biasing signals from the flow units.

Safety Evaluation Summary:

The new setpoints were calculated by calculation SP-APRM-R102A-D. A margin was developed by considering instrument inaccuracy, calibration uncertainty and drift, and was then subtracted from the analytical limit to come up with the required setpoint. These setpoint revisions ensure safe operation and shutdown of the plant by causing the APRM flow-biased rod block and scram to occur below the Technical Specification limits of 110% and 120%, respectively.

Based on the evaluation performed, it is concluded that this change does not involve an unreviewed safety question.

Safety Evaluation No.: 91-041

Implementation Document No.: N/A

UFSAR Affected Pages: N/A

System: Reactor Manual Control

Title of Change: Dual Control Rod Selection

Description of Change:

On December 16, 1989, an operator at the Oyster Creek Nuclear Station inadvertently selected two control rods during a rod withdrawal. This was attributed to mechanical problems within the reactor manual control system.

The purpose of this evaluation was to determine whether the potential for dual rod selection represented an unreviewed safety question for Unit 1.

Safety Evaluation Summary:

The dual control rod withdrawal concern was evaluated for any impact on the continuous control rod withdrawal transient and the control rod drop transient. The evaluation concluded that the dual control rod selection scenario does not represent a safety concern because the probability of occurrence is small and the consequences are small since reactor scram on high neutron flux protects the reactor core. Additional administrative controls and operator training as a result of the Oyster Creek event have been implemented to ensure proper rod selection withdrawal.

Based on the evaluation performed, it is concluded that continued operation of Unit 1 in its current configuration does not involve an unreviewed safety question.

Safety Evaluation No.:	91-043, Rev. 1 & 2
Implementation Document No.:	Major Order No. 0546
UFSAR Affected Pages:	III-3 (Figure III-1)
System:	N/A
Title of Change:	New York Telephone Switch Building at Nine Mile Point Unit 2

Description of Change:

The original telephone system on site was inadequate to meet the needs of site personnel. A new single switch replaced the two switches previously in use at Units 1 and 2. The new system is housed in a new building outside the protected area, west of the east flood control berm at Unit 2.

Safety Evaluation Summary:

The new single switch facilitates the entire site telephone system as well as meeting the future of data communication. The new building is not within the direct flow path of flood waters, and thus will have no adverse impact on the probable maximum precipitation (PMP) flood study.

Based on the evaluation performed, it is concluded that this change does not involve an unreviewed safety question.

Safety Evaluation No.: 91-069

Implementation Document No.: N/A

UFSAR Affected Pages: III-3 (Figure III-1)

System: N/A

Title of Change: Nine Mile Point Unit 2 Site Paving and Drainage

Description of Change:

This change regraded and paved the parking lot south of the "P" building (an area of approximately 16,000 square yards). Drainage of the swale south of the parking area, running to the east and then to the north, was also improved by lining with geotexal fabric and cobblestone. The existing culvert under the east service road was abandoned. A 12'-0" paved turning lane was also added to Lake Road between the warehouse road and the east service road.

Safety Evaluation Summary:

The paved turning lane improves the flow of traffic into and out of the plant. Paving the parking lot eliminates the possibility of personnel injury due to loose rocks and standing water conditions. A review of the flood study calculations determined that this change improves site drainage and has no adverse effect on the probable maximum precipitation flood elevation.

Based on the evaluation performed, it is concluded that this change does not involve an unreviewed safety question.

Safety Evaluation No.: 92-001

Implementation Document No.: Mod. N1-90-010

UFSAR Affected Pages: N/A

System: Fire Protection

Title of Change: Fire Panel Overheating

Description of Change:

This modification enhanced the mechanical ventilation of the local fire control panels (LFCPs) to prevent the overheating of temperature-sensitive equipment, thereby improving the reliability of the panels. Additional exhaust fans and intake filters were installed on each cubicle of each LFCP. These changes improved air flow through each cubicle, thereby improving the cooling of the LFCP internals.

Safety Evaluation Summary:

This change does not alter any safety function described in the UFSAR and does not adversely affect the Unit 1 fire protection program. This modification not only improves the reliability of the LFCPs, but the plant fire protection system as a whole. The equipment added by this modification does not interconnect with any functions performed within the LFCPs. Therefore, any fault by this equipment will not impact the ability of the LFCPs to perform their intended functions.

Based on the evaluation performed, it is concluded that this change does not involve an unreviewed safety question.

Safety Evaluation No.: 92-009

Implementation Document No.: Procedure N1-EMP-GEN-296

UFSAR Affected Pages: IX-2a

System: 345-kV Distribution

Title of Change: Establishment of and Restoration from 345-kV Backfeed through Station Transformers T1 or T2

Description of Change:

This change established a procedure for backfeeding 345 kV to the Station when in the cold shutdown or refueling condition.

After disconnecting the main generator links and closing in on the 345-kV breakers R915 or R925, and after taking the appropriate precautions, backfeed is accomplished by energizing main transformer T1 or T2 by way of 345-kV lines 8 or 9. This configuration will step down the system voltage from 345 kV to 24 kV and use station service transformer #10 to supply 4160 V to energize power boards #11 and #12.

Safety Evaluation Summary:

When Unit 1 is in the cold shutdown or refueling condition, the main turbine generator is out of service and station power is being supplied by the 115-kV reserve sources via transformers T101N and T101S. The establishment of 345-kV backfeed through transformer T1 or T2 increases the reliability of availability of offsite ac power to energize the 4160-V power boards 11 and 12. This configuration does not affect the station distribution system or nuclear safety. The 345-kV system will not be, at any time during this configuration, the only source of ac power available to supply the station. The 345-kV buses will not be paralleled to the 115-kV lines or the emergency diesel generators while the backfeed configuration is in place.

Based on the evaluation performed, it is concluded that this change does not involve an unreviewed safety question.

Safety Evaluation No.: 92-010, Rev. 3

Implementation Document No.: Simple Design Change SC1-0078-92

UFSAR Affected Pages: VI-64, VI-68

System: Reactor Protection (RPS)

Title of Change: Removal of High Radiation Sensor Relay Timers (2-11/202 and 2-12/202), Reactor Building Ventilation System

Description of Change:

This change removed time delay relays 2-11/202 and 2-12/202. These relays delayed closure of the reactor building normal exhaust line isolation valves and delayed tripping of the normal exhaust fans upon detection of high radiation levels within the reactor building. The purpose of the delay was to ensure that reactor building negative pressure was maintained during the transition from normal to emergency ventilation system operation. Analysis has shown that the time delay is not required to achieve that purpose.

Safety Evaluation Summary:

Analysis has demonstrated that the time delay relays are not required to maintain the reactor building pressure negative during the transition from normal to emergency ventilation system operation. In addition, removal of the timer reduces the likelihood of an overpressurization/underpressurization event. Maintaining the subject negative pressure will be accomplished by surveillance (N1-ST-Q20) of the ventilation system isolation valve closure times.

Based on the evaluation performed, it is concluded that this change does not involve an unreviewed safety question.

Safety Evaluation No.: 92-011

Implementation Document No.: N/A

UFSAR Affected Pages: IX-4

System: 115-kV Offsite Power Supply

Title of Change: Bennetts Bridge Hydro - Removal from Service in 1992 and 1993

Description of Change:

Bennetts Bridge Hydro Station Units 3 and 4 are being removed from service from June 1, 1992, to February 1, 1993, for rehabilitation and upgrading. With their removal from service, dedicated emergency backup power to the Unit 1 high pressure coolant injection (HPCI) system through the 115-kV transmission system will not be available.

Also, controllership of the hydroelectric operations at Bennetts Bridge has been transferred from the Central Regional Control Center in Syracuse to the Northern Regional Control Center in Watertown.

Safety Evaluation Summary:

Since HPCI backup power was not assured during 115-kV system blackout conditions, credit was not taken for its use in the loss-of-coolant accident (LOCA) analyses. Thus, the results of the current LOCA analysis remain unchanged. Removal of these units at Bennetts Bridge will not cause a violation of the Technical Specifications (Section 3.1.8, High Pressure Coolant Injection, and Section 3.6.3, Emergency Power Sources).

Based on the evaluation performed, it is concluded that this change does not involve an unreviewed safety question.

Safety Evaluation No.: 92-021

Implementation Document No.: LDCN U-N0184

UFSAR Affected Pages: XV-5

System: Fuel, Turbine Bypass Portion of Main Steam

Title of Change: Disposition of Turbine Bypass Capacity Shortfall, PR-2070

Description of Change:

Safety Evaluation No. 90-048 (previously reported in letter NMP1L 0589 dated June 28, 1991) addressed a shortfall of turbine bypass valves capacity that was measured during plant restart testing. This change adds a clarification to UFSAR Chapter XV, which notes that this shortfall in bypass capacity will not cause the transients defined in UFSAR Chapter XV, which use the bypass system, to exceed any safety limits. These transients are bounded by the reload analysis which does not take credit for the bypass system.

Safety Evaluation Summary:

This change updated the UFSAR to note the impact of the turbine bypass capacity shortfall on Chapter XV transients, as previously analyzed in Safety Evaluation No. 90-048. Since the limiting transients analyzed for the reload analysis do not take credit for the turbine bypass valves, the bypass capacity shortfall does not impact plant safety.

Based on the evaluation performed, it is concluded that this change does not involve an unreviewed safety question.

Safety Evaluation No.: 92-025, Rev. 1

Implementation Document No.: Procedures N1-OP-5, N1-ISI-LK101

UFSAR Affected Pages: N/A

System: Control Rod Drive (CRD)

Title of Change: Manual Operation of CRD Flow Control Valve (FCV) When Temperatures are Equal to or Greater Than 212°F

Description of Change:

During reactor vessel hydrostatic testing, this change allows operation of the CRD system with the FCV set to manual at a flow rate of less than 50 gpm, with an operator dedicated (as required by procedure N1-ISI-LK101) to assume control should increased makeup be required. Also, during plant startup and operation, this change allows operation of the CRD system with the FCV set to manual at a flow rate of greater than or equal to 50 gpm, with an operator dedicated (as required by procedure N1-OP-05) to assume control to provide makeup as required. The change during plant startup and operation also allows placing the FCV in manual with a dedicated operator if reactor pressure results in erratic response while set in automatic. The dedicated operator insures that an adequate flow rate (greater than or equal to 50 gpm) is maintained. This change was necessary to maintain proper feed and bleed control during the reactor hydrostatic test, and to eliminate erratic CRD FCV response while under low reactor pressure conditions during startup.

Safety Evaluation Summary:

This change is acceptable since (1) the system continues to meet the Technical Specification surveillance requirements in that the pump meets its pump head curves and is capable of automatic initiation, (2) in the event of reactor coolant leakage and resulting pump discharge head decrease, pump flow will increase in accordance with the pump curve, and (3) the dedicated operator can assume manual control to compensate for any reactor coolant leakage.

Based on the evaluation performed, it is concluded that this change does not involve an unreviewed safety question.

Safety Evaluation No.: 92-031

Implementation Document No.: N/A

UFSAR Affected Pages: I-5; V-3 (Table V-1), V-21, V-22, V-23 (Figure V-5), V-23a, V-24 (Figure V-6), V-25 (Figure V-7); XVI-1, XVI-51

System: N/A

Title of Change: Incorporation of the Method of Revision 2 to Regulatory Guide 1.99, Radiation Embrittlement of Reactor Vessel Materials into the Plant Licensing Basis

Description of Change:

New reactor vessel pressure-temperature (P-T) limits have been developed to reflect the impact of Regulatory Guide (RG) 1.99, Revision 2, to ensure Station operations are conducted with reactor pressure vessel (RPV) above nil ductility transition temperature (NDTT) to preclude brittle failure of RPV materials. Generic Letter (GL) 88-11 requested all nuclear plants to analyze the impact of RG 1.99, and that all actions necessary be completed within two plant outages of the effective date of the revision. NMPC performed the appropriate analyses and updated the P-T limits curves. This change also resolved a mixup in reactor vessel surveillance specimens. Several capsules have been reinserted in the reactor cavity, and the surveillance capsule withdrawal schedule has been revised. A license amendment request to incorporate these changes into the Technical Specifications was submitted to the NRC.

Safety Evaluation Summary:

The revised P-T operating limits are based on analysis using Revision 2 to RG 1.99, and thus satisfy GL 88-11. Implementation of the revised P-T operating limits ensures that Station operations are conducted with the reactor vessel materials above the NDTT. The revised P-T operating limits and surveillance program preclude brittle failure of the reactor vessel materials since safety margins specified in 10CFR50 Appendix G and the ASME Code Appendix G will be maintained. The revised P-T limits and surveillance program were approved by the NRC in their safety evaluation associated with the issuance of License Amendment No. 127.

Safety Evaluation No.: 92-032, Rev. 0 & 1

Implementation Document No.: Mod. N1-92-011

UFSAR Affected Pages: N/A

System: Emergency Condenser

Title of Change: Cut Weld Joining Valve 39-04 to Valve 39-02 and/or Cut Weld Joining Valve 39-03 to Valve 39-01

Description of Change:

This evaluation reviewed and evaluated the safety implications and impacts of cutting out the circumferential butt weld joining check valve 39-04 to gate valve 39-02 (and/or the butt weld joining check valve 39-03 to gate valve 39-01) with (1) the reactor in the cold shutdown condition, (2) irradiated fuel contained in the reactor vessel, and (3) single reactor pressure boundary isolation via a safety-related manual gate valve.

This action was to facilitate shop repair of cracks in the check valve and eventual replacement of the gate valves.

Safety Evaluation Summary:

The emergency condenser system is not required to be operable when the plant is in the cold shutdown condition. The design of the manual gate valve is such that it can provide isolation of the reactor pressure boundary when performing maintenance on the upstream check valve. The valve, when closed, has demonstrated leak-tightness and will not degrade during the cutting operation. Existing cracks located in the gate valve body will not become larger as a result of the cutting operation. In the event that some minor leakage were to occur through the valve disc seat area, it would be well within the makeup capabilities of reactor water makeup systems and would not lead to core uncovery. Measures were taken to establish reactor conditions most favorable with respect to inventory, isolation, level indication, and decay heat removal, and to mitigate the consequences in the unlikely event that excessive leakage were to occur during the cutting operation.

Based on the evaluation performed, it is concluded that this change does not involve an unreviewed safety question.

Safety Evaluation No.: 92-033

Implementation Document No.: Fuel Handling Procedure N1-FHP-27, Rev. 9

UFSAR Affected Pages: N/A

System: Control Rod Drive

Title of Change: Extended Core and Control Rod Drive Maintenance Tech. Spec. Basis Change for Spiral Offload

Description of Change:

This change to Technical Specification Bases Section 3.5.3 revised the sequence of bypassing the refueling interlock for control rods located in an offloaded fuel cell. The original bases required bypassing the refueling interlock prior to withdrawal of the control rod located within an offloaded fuel cell. The revised sequence installs the refueling interlock jumper after the control rod for the selected cell is fully withdrawn, thus maintaining the one-rod-out automatic protection until all rod movement is complete.

In addition, the original bases specified that independent verification of the refuel interlock bypass would be performed by a member of the reactor analysis staff. The revised bases now specify that an independent licensed operator or engineer will perform the independent verification.

Safety Evaluation Summary:

This Technical Specification basis change does not adversely affect nuclear safety, nor does it increase the potential for an inadvertent criticality excursion during refueling operations. General Electric recommended that refuel interlocks be maintained until after the control rod located within an offloaded fuel cell was fully withdrawn. The interlock for the withdrawn control rod would then be bypassed and independently verified. Operation in this sequence provides automatic protection from multiple control rod withdrawal which could result in inadvertent criticality.

The bases change in the independent verification is due to the fact that the Reactor Analysis Department no longer exists because of an organizational change. This independent verification is consistent with that required by Technical Specification 4.1.1 b.(3)(b), "Control Rod System."

Safety Evaluation No.: 92-033 (cont'd.)

Safety Evaluation Summary: (cont'd.)

Based on the evaluation performed, it is concluded that this change does not involve an unreviewed safety question.

Safety Evaluation No.: 92-034

Implementation Document No.: Procedure N1-OP-43

UFSAR Affected Pages: N/A

System: Average Power Range Monitoring (APRM) and Intermediate Range Monitoring (IRM) Nuclear Instrumentation Systems

Title of Change: Coincident APRM Downscale and IRM Upscale Scram in RUN Design Basis

Description of Change:

This change to operating procedure N1-OP-43 allows the withdrawal of the IRM detectors to the storage position when the mode switch is in RUN, and the associated APRM is greater than the downscale trip setpoint as long as the associated IRM is maintained onscale. The procedure previously allowed the IRM to be maintained in an upscale trip to maintain the APRM downscale operable. This practice resulted in partial IRM insertion at power and premature IRM detector burnout.

Safety Evaluation Summary:

The design basis for the coincident IRM upscale and APRM downscale scram in the RUN mode is to assure proper overlap between the IRM and APRM systems. The Technical Specifications allow this scram to be bypassed in the RUN mode when the IRM and APRMs are onscale. Operating the IRMs such that the IRM is in the storage position in the RUN mode is consistent with the UFSAR description. Verifying the IRM is onscale (operable) and APRM operability, per Technical Specifications, is the only requirement to assure that the bypass conditions are applicable.

Based on the evaluation performed, it is concluded that this change does not involve an unreviewed safety question.

Safety Evaluation No.: 92-036, Rev. 0 & 1

Implementation Document No.: Mod. N1-92-011

UFSAR Affected Pages: N/A

System: Emergency Condenser (Condensate Return)

Title of Change: Replacement/Repair of Emergency Condenser Valves

Description of Change:

This change consisted of replacement of cracked manual gate valves 39-01 and 39-02 with new valves, and weld repair of check valve 39-04. This also involved replacement of a straight spool of 10" pipe in each loop to accommodate valve fit up, and minor configuration changes to the drain pipes attached to the valves.

Safety Evaluation Summary:

This change restores the emergency condenser system to its design basis, and hence nuclear safety and plant operability are not affected. This modification meets all code and regulatory requirements for repair, replacement, test, and examination of the valves, piping, and welds. These repairs were performed with the reactor head removed and the reactor core offloaded. The recirculation loops #11 and #15 suction nozzles were plugged. Measures were taken to minimize the duration that the plugs were required, and to establish conditions most favorable with respect to reactor inventory, level indication, and makeup water availability.

Based on the evaluation performed, it is concluded that this change does not involve an unreviewed safety question.

Safety Evaluation No.: 92-037

Implementation Document No.: Major Order No. 1566

UFSAR Affected Pages: IV-35, IV-35a

System: Control Rod

Title of Change: Control Blade Replacement

Description of Change:

This evaluation addresses the use of General Electric Duralife 230 (D-230) control rods. The D-230 is an improved design with an extended lifetime. Design features of the D-230 include: (1) the use of hafnium in place of boron carbide in the upper six inches of the control rod blade and in the outer edge of each wing; (2) use of high-purity stainless steel tube material; (3) a redesigned velocity limiter; (4) a new upper handle design; (5) incorporation of the BWR/6 control blade coupling release handle design; and (6) noncobalt pins and rollers.

The D-230 blade is very similar to the ALLCR addressed in Safety Evaluation No. 85-029, except that the D-230 blade has a larger volume of B_4C to increase control rod lifetime.

Safety Evaluation Summary:

The D-230 generic safety evaluation has been previously approved by the NRC. The new control rod reactivity worth is the same as the all-B_4C control rods. The scram insertion times and control rod drop times are not significantly affected.

Based on the evaluation performed, it is concluded that these changes do not involve an unreviewed safety question.

Safety Evaluation No.: 92-038, Rev. 2 & 3

Implementation Document No.: Procedures NEP-POL-300, GAP-POL-01

UFSAR Affected Pages: XII-30; Sections XIII.A, XIII.B, XIII.F, XIII.G; 10A-10, 10A-12, 10A-13

System: N/A

Title of Change: Nine Mile Point Unit 1 Reorganization

Description of Change:

Section XIII of the UFSAR describes the organization responsible for operation of Nine Mile Point Unit 1. This change addresses revisions to the Nuclear Division organizational structure. Departments and positions were redefined and reorganized to enhance the flow of communication and productivity of the Nuclear Division. Affected areas of the division organization include Generation and Quality Assurance.

Safety Evaluation Summary:

The organizational changes provide the Nuclear organization with resources to be both efficient and effective while meeting NRC guidance. The changes did not reduce the effectiveness of supervision or the ability of groups or individuals to perform activities necessary to ensure safe operation or shutdown of the plant. Positions specific to Unit 1 meet ANSI/N18.1-1971 requirements as endorsed by Regulatory Guide 1.8. Positions with site-related responsibilities meet both ANSI/ANS-3.1-1978 and ANSI/N18.1-1971 as endorsed by Regulatory Guide 1.8.

Based on the evaluation performed, it is concluded that this change does not involve an unreviewed safety question.

Safety Evaluation No.:	92-039, Rev. 1
Implementation Document No.:	Procedure N1-STP-23
UFSAR Affected Pages:	N/A
System:	Core Spray, Containment Spray, Automatic Depressurization System (ADS)
Title of Test:	Testing of Initiation Logic for Core/Containment Spray and ADS Circuitry as Powered from EDG 102 and 103 for Degraded Voltage Conditions

Description of Change:

Special test procedure N1-STP-23 was performed to acquire data for existing circuit relays for characteristics of pickup and dropout voltages and frequency response. With the plant in cold shutdown conditions and with one channel of both core and containment spray operational, the initiation logic of the other channel was isolated from its normal power supplies, tested, and subsequently returned to service. Testing involved connection of these circuits to a source of variable voltage and frequency. Voltages were increased and decreased to derive the desired information for pickup and dropout of relay coils. The circuits were then tested at variable frequencies to determine circuit response with respect to time. This test was performed to satisfy a commitment to the NRC following the Electrical Distribution System Functional Inspection (Inspection Report No. 50-220/91-80).

Safety Evaluation Summary:

The testing was performed with the plant in cold shutdown. One channel of both the core spray and containment spray systems remained operable. The evaluation determined that the testing would not initiate or adversely affect other safety-related structures, systems or components since logic circuitry being tested was isolated. Appropriate precautions, limitations and test abort criteria were included in the procedure should unexpected conditions arise which could have the potential to put the plant in an unsafe condition. System operability tests were performed before the systems were returned to service. As an added precaution, spare timers and relays were made available (of the types being tested) as a prerequisite to testing.

Safety Evaluation No.: 92-039, Rev. 1 (cont'd.)

Safety Evaluation Summary: (cont'd.)

Based on the evaluation performed, it is concluded that this test does not involve an unreviewed safety question.

Safety Evaluation No.: 92-040

Implementation Document No.: Procedures NIP-ECA-01, NIP-SRE-01

UFSAR Affected Pages: Section XIII.G

System: N/A

Title of Change: Operations Experience Assessment

Description of Change:

This procedural change fulfills the operating experience assessment (OEA) function by utilizing an alternative approach to that presently described in the UFSAR. The assessment function is no longer fulfilled primarily by the OEA group. The procedural changes require that the OEA function be accomplished by a responsible organization which is considered most cognizant over the operating information being evaluated. This assessment function is controlled by a Nuclear Division Interfacing Procedure, NIP-ECA-01, entitled "Deviation Event Report." The DER process, in conjunction with Nuclear Division Interfacing Procedure NIP-SRE-01, entitled "Operating Experience Assessment," meets the requirements of TMI Issue I.C.5.

In addition, the procedural changes eliminate the need for mandatory Station Operations Review Committee (SORC) participation every two months with the OEA group. The alternative approach allows the Plant Manager to request SORC involvement in the processing of DERs related to the OEA function on an as-needed basis.

Safety Evaluation Summary:

The use of the DER process to fulfill the OEA function, as mandated by TMI Issue I.C.5, is acceptable based upon the following:

1. The DER process is proceduralized;

2. OEA for any given applicable DER is performed by the most qualified NMPC group, since the selection criteria of the responsible organization for processing the DER is procedurally required to be the most cognizant group for the subject matter of a given DER;

Safety Evaluation No.: 92-040 (cont'd.)

Safety Evaluation Summary: (cont'd.)

3. The DER disposition process provides a mechanism by which necessary plant actions, training, and retraining will be stipulated; and

4. SORC involvement, as mandated by either Plant Manager on an as-needed basis, ensures fulfillment of SORC's review function of advising the Plant Manager on matters related to nuclear safety.

Based on the evaluation performed, it is concluded that this change does not involve an unreviewed safety question.

Safety Evaluation No.: 92-045

Implementation Document No.: N/A

UFSAR Affected Pages: N/A

System: Radwaste

Title of Change: Temporary Use of a CO_2 Pellet Decontamination Facility at NMP1

Description of Change:

This change involves the installation and use of a CO_2 pellet cleaning facility for decontamination of tools and other hardware during NMP1 outages. The pellet cleaning facility will be temporarily located on the west side of the Unit 1 turbine building, and consists of a 14-ton liquid CO_2 storage tank, compressed air delivery system, CO_2 pelletizer, delivery gun, cleaning enclosure, and support equipment enclosure. The system cleans radioactively-contaminated hardware of up to 4000 lbs. by means of high-velocity delivery of CO_2 pellets. The solid CO_2 expands to gas during the decontamination process and is removed along with the contaminants via the HVAC system. Air exhaust from the cleaning facility is directed into the turbine building.

Safety Evaluation Summary:

The CO_2 pellet cleaning facility is expected to reduce both the time and exposure to workers in the handling of radioactive materials. The controls and operation of the facility do not create a new radioactive effluent pathway or create an unmonitored release of radioactivity. The decontamination enclosures are designed to ensure that a negative pressure is maintained in both the walk-in and glove box enclosures. A HEPA filter system is used to ensure that both workers and the environment are not subjected to unfiltered exfiltration from the facility. Control room habitability would not be affected by rupture of the CO_2 storage tank or loss of containment of the facility. The facility itself will not create any building wake effects that would affect atmospheric dispersion values used for accident analyses.

Based on the evaluation performed, it is concluded that this temporary change does not involve an unreviewed safety question.

Safety Evaluation No.: 92-046, Rev. 0 & 1

Implementation Document No.: N/A

UFSAR Affected Pages: III-3 (Figure III-1)

System: N/A

Title of Change: Nine Mile Point Compressed Bottled Gas Storage Facility

Description of Change:

This change consists of the construction of a new bottled gas storage facility. The new storage facility is a nonsafety-related structure and is located outside the protected area south of the Unit 2 Warehouse. The area of the new facility is about 2500 sq. ft. with interior ceiling height about 15 ft., and is designed to accommodate 550 bottles of various compressed gases. The facility consists of two areas; the east area is designated for storage of the flammable bottles, and the west area is designed for storage of the nonflammable bottles.

Safety Evaluation Summary:

The construction of the new storage facility does not disturb those attributes of the site, in the immediate vicinity of the plant, which safely divert the local probable maximum precipitation runoff overland to Lake Ontario. Also, since the new facility is low in elevation and outside the protected area, this location will not create any wind disturbances which may affect the atmospheric dispersion factor study.

The effects of an accidental nitrogen gas release from the facility on control room habitability were evaluated. The potential for missiles as a result of fire or explosion was also considered. No adverse impacts were identified.

Based on the evaluation performed, it is concluded that this change does not involve an unreviewed safety question.

Safety Evaluation No.: 92-050, Rev. 0 & 1

Implementation Document No.: N/A

UFSAR Affected Pages: N/A

System: Main Steam; Reactor Instr; Turbine Protect/Supervisory

Title of Change: Refuel Cycle Surveillance Frequency Extension Evaluation

Description of Change:

Certain NMP1 Technical Specification surveillances which are required to be performed on a "refuel cycle" timetable nominally became due in January 1993. The due dates of these surveillances were extended to allow plant operation during a period of low operating reserve based on New York Power Pool (NYPP) projections. This safety evaluation reviewed the affected surveillances and provided a basis for justifying extensions to Technical Specification specified surveillance periods. The current refuel outage latest start date was February 19, 1993, for the purposes of this evaluation. Therefore, the extension covered a period from January 1993 until after February 19, 1993, during the planned refuel outage.

Safety Evaluation Summary:

A review of historical equipment "as-found, as-left" historical data and associated statistical analysis confirms that the effects on setpoint drift due to the surveillance frequency extension would be insignificant. Also, none of the ASME Section XI test frequencies will be exceeded without NRC approval. A relief request was submitted to the NRC to delay certain surveillances specified in the IST program (reference NMPC letter NMP1L 0705 dated August 15, 1992). Therefore, the delay in the start of Unit 1 refuel surveillances until after February 19, 1993, will not cause plant operation outside of analyzed limits or accident conditions or cause the reduction of any margin of safety.

Based on the evaluation performed, it is concluded that this change does not involve an unreviewed safety question.

Safety Evaluation No.: 92-052

Implementation Document No.: Temporary Mod. 92-044

UFSAR Affected Pages: N/A

System: N/A

Title of Change: Reroute the Security Fence to Support the Demolition of "Area Complex" Building and the Construction of the Swing Building

Description of Change:

This change constructed a temporary "bubble fence" and rerouted the security fence to exclude the Area Complex site from the protected area of Nine Mile Point so activities associated with the construction of the swing building would be outside the security zone.

The temporary "bubble fence" was constructed following security procedures and regulations. The fence was equipped with a security intrusion detection system, and a closed-circuit TV camera (CCTV) was installed in accordance with 10CFR73.

Safety Evaluation Summary:

This temporary modification does not result in a significant elevation change in the flooding levels within the berm area of Nine Mile Point Site. Rerouting the security fence and construction of the "bubble fence" do not disturb those attributes of the site in the immediate vicinity of plant which safely divert the local probable maximum precipitation (PMP) runoff overland to Lake Ontario.

Based on the evaluation performed, it is concluded that this temporary change does not involve an unreviewed safety question.

Safety Evaluation No.: 92-053, Rev. 0 & 1

Implementation Document No.: Simple Design Change SC1-0092-92

UFSAR Affected Pages: VI-22

System: Torus

Title of Change: Torus Corrosion Coupons

Description of Change:

This change installed corrosion coupons in the torus to provide another method of determining torus shell corrosion rates in addition to the current UT methods. The coupon holder supports were attached to existing gussets on the ring girders, and were fabricated from lexan, to prevent or minimize galvanic corrosion.

Safety Evaluation Summary:

The NRC directed NMPC to install corrosion coupons in the torus during the 1993 refuel outage in their August 25, 1992, Safety Evaluation Report. Although the coupons do not perform any safety function, the holders and supports are designed to withstand LOCA loads. Even if the coupons were dislodged during a LOCA, there would be no detrimental effect due to impact on the torus shell, and no detrimental effect to core and containment spray systems since the loose coupons would not have the capability, under LOCA conditions, to enter the horizontal suctions of those systems.

Based on the evaluation performed, it is concluded that this change does not involve an unreviewed safety question.

Safety Evaluation No.: 92-054

Implementation Document No.: Procedures N1-CSP-8M, S-SP-5

UFSAR Affected Pages: IX-24

System: Emergency Diesel Generator Fuel Oil Handling and Storage

Title of Change: Emergency Diesel Generator Fuel Oil Sampling

Description of Change:

The First Supplement to the UFSAR (May 1968), in describing the emergency diesel generator (EDG) fuel oil storage and delivery system (page V-12), states that "Sample taps will be provided between the tanks and filters," and also that samples will be taken at 6-month intervals initially, then annually thereafter. The current monitoring of EDG fuel oil quality is performed monthly. Samples are taken from the storage tank with a sample thief, accessed through the storage tank fill port, obtaining a sample at a depth of 6 in. from the tank bottom.

This evaluation addresses the equivalency for the sampling method currently utilized.

Safety Evaluation Summary:

Although provisions for sampling taps were provided for on the delivery system, alternate methods are used to monitor the fuel oil quality. The sampling procedure used ASTM D-270, as referenced by Regulatory Guide 1.137, as a basis for the procedure method. The most current sampling method is ASTM D-4057-88 (superseding ASTM D-270). It contains the guidance necessary to obtain the ASTM "outlet sample" from the storage tank at the same level as the suction line of the transfer pump. This sample is equivalent to a transfer line sample used to monitor the EDG fuel oil quality.

Failures of the sample thief chains that result in the sampler either remaining in the storage tank fill tube or falling to the bottom of the storage tank have been evaluated and will not prevent the EDGs from performing their function.

Based on the evaluation performed, it is concluded that this change does not involve an unreviewed safety question.

Safety Evaluation No.: 92-056

Implementation Document No.: N/A

UFSAR Affected Pages: N/A

System: N/A

Title of Change: Storage of GE11 Fuel in the South Half of the Fuel Pool

Description of Change:

This safety evaluation addressed the insertion and storage of 172 new GE11 fuel assemblies into the boraflex poison racks in the south half of the NMP1 spent fuel pool. These assemblies were loaded in the core for Reload 12. The new fuel was inserted in the south half of the spent fuel pool prior to the reload. The core was completely offloaded for the refueling as well as other maintenance activities. The south half of the spent fuel pool had sufficient open spots to accommodate the new fuel as well as the offloaded core. Thus, the racks had a mixed array of exposed bundles and new GE11 fuel.

Safety Evaluation Summary:

The GE11 fuel is designed to be handled and stored in the same manner as the current fuel assemblies. The GE11 reload fuel axial enrichment is less than the design value for the racks, and the weight of the GE11 assembly is slightly less than the current fuel assembly designs. A criticality analysis of the spent fuel pool verifies that the infinite neutron multiplication factor (K-inf) meets the acceptable rack reactivity limits. Due to the dynamic similarity of the GE11 fuel design to previous fuel designs, no significant differences in seismic response are predicted, and the seismic loads are considered to be within the design values for the racks.

Based on the evaluation performed, it is concluded that this change does not involve an unreviewed safety question.

Safety Evaluation No.: 92-057

Implementation Document No.: Simple Design Change SC1-209-91

UFSAR Affected Pages: N/A

System: Containment Spray/Containment Spray Raw Water

Title of Change: Provide Venting Capability to the Containment Spray Heat Exchangers

Description of Change:

This change provides venting to the shell and tube sides of the containment spray heat exchangers by opening the vent line manually-closed blocking valves and leaving them permanently open except during surveillances and maintenance. Upon system initiation, the exchangers are filled along with the balance of the system piping. Without the vent lines open, the potential exists for noncondensible gases (air) to become trapped within the exchangers, effectively reducing the heat exchange surface area and adversely affecting system performance.

Safety Evaluation Summary:

Each containment spray heat exchanger has two vent lines on the tube side and two vent lines on the shell side. On each side, the two vents combine upstream of a Y-type strainer and a flow limiting orifice. The tube side vents are routed to the floor drain system; the shell side vents are routed to the torus. Leaving the vent lines normally open reinstates the original design configuration (i.e., prior to replacement of heat exchangers in 1986). Potential impacts evaluated included additional flow to the floor drain system, isolation of the common vent line to the torus, and interconnection of heat exchangers via the common shell side vent line. No adverse impacts on plant safety were identified.

Based on the evaluation performed, it is concluded that this change does not involve an unreviewed safety question.

Safety Evaluation No.: 92-059, Rev. 1

Implementation Document No.: Mod. N1-86-026

UFSAR Affected Pages: III-46 (Figure III-18)

System: TSC Emergency Ventilation (System #212)

Title of Change: Addition to TSC Ventilation Control Panel

Description of Change:

This modification installed indication lights for Technical Support Center (TSC) emergency ventilation fan FN-1 and dampers 212-42, 212-31 and 212-87, located in the charcoal filter room, as well as indication lights for normal/emergency power source. A digital timer was also wired to key switch KS-2. The timer runs only when the TSC ventilation system is in the emergency mode of operation. All indication is provided on the TSC ventilation control panel ATPC-1, located in the TSC.

Safety Evaluation Summary:

This modification provides indication at the TSC ventilation control panel to monitor status of ventilation equipment related to the TSC, without requiring occupants to exit the TSC. Allowing personnel to remain in the TSC during emergency conditions decreases the possibility of personnel contamination and loss of valuable TSC personnel time.

The new equipment/material introduced by this modification only affects the TSC emergency ventilation system. It is isolated from other areas of NMP1 and NMP2 which could affect the safe shutdown of either plant.

Based on the evaluation performed, it is concluded that this change does not involve an unreviewed safety question.

Safety Evaluation No.:	92-060
Implementation Document No.:	LDCR 1-92-UFS-008
UFSAR Affected Pages:	V-11 (Figure V-1); VI-44 (Table VI-1), VI-45 (Table VI-1), VI-46 (Table VI-2), VI-56, VI-58 (Figure VI-22); VII-47 (Figure VII-12); X-9 (Figure X-3)
System:	Various
Title of Change:	Miscellaneous UFSAR Discrepancies

Description of Change:

A review of the UFSAR against current controlled design basis documents uncovered multiple discrepancies, primarily due to a failure to properly update the UFSAR as design changes were made. In all cases analyzed in this safety evaluation, the UFSAR was incorrect and required revision. The reason for this safety evaluation was to assure that none of the proposed changes constitute an unreviewed safety question.

Safety Evaluation Summary:

Most of the identified UFSAR changes are due to design changes and have been previously evaluated in 10CFR50.59 safety evaluations. Other changes are due to inconsistencies within the UFSAR itself, e.g., one table includes a valve while the corresponding figure omits it. Several of the changes addressed are simply editorial in nature and have no technical significance. One change addressed the piping configuration for the recirculation pump coolers, which was inaccurately represented on UFSAR Figure VI-22 (page VI-58). This UFSAR correction is made to accurately depict the as-built plant configuration, and has no impact on the functioning of the coolers, the reactor building closed loop cooling system, or the containment isolation valves for the subject penetration.

Based on the evaluation performed, it is concluded that these UFSAR changes do not involve an unreviewed safety question.

Safety Evaluation No.: 92-070

Implementation Document No.: N/A

UFSAR Affected Pages: X-62, 10A-13

System: N/A

Title of Change: Reduction Fire Brigade Staffing through Partial Combination of the Unit Fire Brigades

Description of Change:

This change reduces the Unit Fire Brigade staffing to a minimum of a Fire Chief and two Fire Fighters. This results in a minimum site response organization of five Brigade members.

Safety Evaluation Summary:

Establishing a Unit staff size of a Fire Chief and two Fire Fighters achieves the requirements of 10CFR50 Appendix R and BTP CMEB 9.5-1, which requires that at least five Brigade members respond to a fire. Of these five responders, the Fire Chief and two members must be familiar with the effects of fire and fire suppression activities on plant systems. The reduction in Unit-dedicated Fire Brigade staffing levels will not result in a lesser response to a fire (either in number of personnel fighting the fire or in a significant increase in their response time) or in a loss of fire watch or surveillance/maintenance activities.

Based on the evaluation performed, it is concluded that this change does not involve an unreviewed safety question and does not decrease the effectiveness of the fire protection program.

Safety Evaluation No.:	93-003, Rev. 0 & 1
Implementation Document No.:	Temporary Mod. 93-0004
UFSAR Affected Pages:	N/A
System:	Control Rod Drive
Title of Change:	Operation with Partially Open 301-133 Valve and Test Equipment Installed

Description of Change:

During the performance of a surveillance procedure for CRD/HCU 10-31, the withdraw high point vent (301-133) valve would not fully isolate, which prevented disconnecting the test equipment because of the resultant coolant leakage. The test equipment was left installed until the valve could be repaired and/or the line depressurized and the cap replaced.

Safety Evaluation Summary:

Operation with the high point vent valve not fully closed and the test equipment installed is acceptable. A failure of the test equipment is unlikely since the test equipment pressure and temperature ratings exceed those of the CRD system. If a failure did occur, the resulting inventory loss is well within the makeup capability of the CRD system. Analyses contained in NUREG-0803, which show the offsite doses would be below 10CFR100 limits and that the Reactor Building would be accessible for coolant activity values at the Standard Technical Specification limit, are bounding. Rod 10-31 is operable and can be fully withdrawn. Worst-case analysis indicates sufficient shutdown margin exists even if the rod gets stuck in the full out position.

Based on the evaluation performed, it is concluded that this temporary change does not involve an unreviewed safety question.

Safety Evaluation No.: 93-009

Implementation Document No.: Procedures GAP-POL-01 Rev. 01, and NEP-POL-300 Rev. 01

UFSAR Affected Pages: Section XIII.A

System: N/A

Title of Change: Restructuring of Nuclear Support Organization Functions in Accordance with Revised Procedures GAP-POL-01 and NEP-POL-300

Description of Change:

Changes have been made to the corporate level management and technical support structure of NMPC's Nuclear Division including: Reorganizing the Licensing and Information Management Branches of the Nuclear Support Organization back under the Nuclear Engineering Organization; reorganizing the Training and Emergency Preparedness Branches of the Nuclear Support Organization back under the Nuclear Generation Organization; reorganizing the Procurement Branch of Nuclear Support under the Nuclear Generation Organization; dissolving the Nuclear Support Organization and eliminating the position of Vice President Nuclear Support.

Safety Evaluation Summary:

The new organizational structure provides for the integrated management of activities that support the operation and maintenance of Nine Mile Point Unit 1 and Unit 2. The Vice President Nuclear Generation will have overall responsibility for the support functions of Training, Emergency Preparedness, and Procurement, in addition to his present responsibilities. The Vice President Nuclear Engineering will have overall responsibility for the support functions of Licensing and Information Management, in addition to his present responsibilities. These changes provide clear corporate management control/direction of onsite and offsite support functions. These changes allow for dissolving the Nuclear Support Organization and eliminating the position of Vice President Nuclear Support. Based on the analysis performed, the new organizational structure for the support functions of Licensing, Information Management, Training, Emergency Preparedness, and Procurement does not constitute an unreviewed safety question.

Safety Evaluation No.: 93-010

Implementation Document No.: Procedure N1-FHP-8A

UFSAR Affected Pages: X-57, X-58

System: Spent Fuel Pool

Title of Change: Fuel Preparation Machine Fuel Submergence

Description of Change:

This change modifies the minimum water depth over handled fuel from 8 ft. to 7 ft.-3 in. The change is in response to a discrepancy noted during revision to procedure N1-FHP-8A. Further, clarification is added to indicate that the depth refers to the depth of water over active fuel.

Safety Evaluation Summary:

This modification changes the depth of water over fuel handled in the pool. No changes to the depth or level of the pool, fuel handling procedures or methods, or existing accidents or analyses are proposed. This change will have no impact on the safe operation or shutdown of the plant, nor will it affect the consequences or probability of any accidents or malfunctions of equipment. The only identified change will be an increase in the calculated refuel floor dose rates due to the 9-in. decrease in water depth over the fuel bundle being handled. However, the fuel preparation machine has been in operation previously in this configuration, and measured dose rates during fuel movements have been significantly lower than calculated values.

Based on the evaluation performed, it is concluded that this change does not involve an unreviewed safety question.

Safety Evaluation No.: 93-016

Implementation Document No.: Procedure NIP-TQS-01

UFSAR Affected Pages: Section XIII.B

System: N/A

Title of Change: Changes to NIP-TQS-01 to Describe Nine Mile Point Unit 1 and Nine Mile Point Unit II Staff Positions Comparable to ANSI N18.1-1971 and ANSI/ANS-3.1-1978

Description of Change:

This change to procedure NIP-TQS-01 added a list that cross-references titles used for staff members at Unit 1 to comparable positions as they appear in ANSI N18.1-1971.

Safety Evaluation Summary:

This change more clearly delineates staff positions as they are titled by NMPC and their qualifications as required by ANSI N18.1-1971. The NMPC staff member titles are in some cases different than those listed in ANSI N18.1-1971, but the functional responsibilities are the same as are the qualifications of the staff members holding those positions. The organization provides clear lines of authority to the Plant Manager and clear management control.

Based on the evaluation performed, it is concluded that this change does not involve an unreviewed safety question.

Safety Evaluation No.: 93-031, Rev. 0

Implementation Document No.: Procedures NEP-POL-300, NIP-IRG-01 and NIP-ECA-04

UFSAR Affected Pages: Section XIII.A

System: N/A

Title of Change: Nuclear Licensing Organizational Structure and Responsibilities - Revised Procedures NEP-POL-300, NIP-IRG-01 and NIP-ECA-04

Description of Change:

The organizational structure of the Nuclear Licensing Organization has changed such that the Manager Licensing reports directly to the Executive Vice President Nuclear. Prior to this change, the Manager Licensing reported directly to the Vice President Nuclear Engineering.

In addition, the Manager Licensing has assumed the responsibilities for interfacing with INPO, and implementing the Quality First Program. These responsibilities were transferred from the Manager Executive Staff. The Manager Executive Staff position has been eliminated.

Safety Evaluation Summary:

The changes made to the organizational structure of the Nuclear Engineering and Nuclear Licensing Organizations continue to provide for the integrated management of activities that support the operation and maintenance of Nine Mile Point Unit 1 and Unit 2. These changes also continue to provide clear management control and effective lines of authority and communications between the organizational units involved in the management, operation, and technical support of the operation of Nine Mile Point Unit 1 and Unit 2.

Based on this evaluation, the organizational structure of the Nuclear Engineering and Nuclear Licensing Organizations continues to satisfy the acceptance criteria of SRP 13.1.1, and does not constitute an unreviewed safety question.

Safety Evaluation No.:	93-034
Implementation Document No.:	Procedures GAP-POL-01, NEP-POL-300
UFSAR Affected Pages:	Section XIII.A
System:	N/A
Title of Change:	Restructuring of Nuclear Generation and Nuclear Engineering Organizations per Revised Procedures GAP-POL-01 and NEP-POL-300

Description of Change:

This change revised the Nuclear Generation organization by expanding the existing Site Services organization to include Nuclear Security, Technical Services (including Fire Protection, Central Maintenance, Environmental Protection, and Procedures), Procurement, and Construction Services. The Site Services organization is now titled Site Support and is under the direction of the General Manager Site Support.

The Nuclear Engineering organization was revised to remove the Construction Services functions from the responsibilities of Manager Engineering (Units 1 and 2) and remove the functional area of Procedure Processing and Publishing.

Safety Evaluation Summary:

The revised organizational structure provides for the integrated management of common activities to support the operation and maintenance of Nine Mile Point Unit 1 and Unit 2. This organizational change alters the reporting structure of existing positions but does not affect the performance of functions or responsibilities. The new reporting structure provides clear management control and effective lines of authority and communications between the organizational units involved in the management, operation, and technical support for the operation of the facility. This change meets the acceptance criteria described in Branch Technical Position CMEB 9.5.1, Standard Review Plan Chapter 13.1, and Technical Specification 6.2.1.

Based on the evaluation performed, it is concluded that this change does not involve an unreviewed safety question.

UFSAR TEXT, TABLE AND FIGURE CHANGES
(BASED ON PREVIOUSLY REPORTED SAFETY EVALUATIONS)

A number of text and figure revisions were made to the UFSAR to include additional changes that are based on previously reported safety evaluations. These changes are identified below.

Safety Evaluation No.: 85-035
Previously Reported: NMPC Letter to NRC dated November 15, 1985

Containment spray isolation valve IV 80-35 was initially locked open as a result of the requirements of 10CFR50 Appendix R (reference NMPC letter to the NRC dated September 12, 1983). However, as described in NMPC letter to the NRC dated November 15, 1985, modifications performed during the 1984 refueling outage eliminated this requirement, and motive power has been returned to valve IV 80-35. UFSAR Appendix 10B, Table 1 (page 10B-38) has been updated to reflect this restoration of motive power to IV 80-35, as described in Safety Evaluation 85-035.

Safety Evaluation No.: 89-013, Rev. 5
Previously Reported: 6/28/91 (as Rev. 3,4)

UFSAR Figure VII-3 (page VII-12) has been revised to depict the containment spray system blocking valves 80-40 and 80-45 as normally open, with their operators removed, as described in Safety Evaluation 89-013. This change was previously incorporated into the text of UFSAR Section VII-B.2.0, but the figure revision was inadvertently overlooked.

Safety Evaluation No.: 89-050, Rev. 2
Previously Reported: 6/29/92

Figure III-14 (page III-26) has been revised to show the revised control room emergency ventilation fan design flow rate of 2875 cfm (±10%), as described in Safety Evaluation 89-050, Rev. 2.

UFSAR TEXT, TABLE AND FIGURE CHANGES
(BASED ON PREVIOUSLY REPORTED SAFETY EVALUATIONS)
(Cont'd.)

Safety Evaluation No.: 90-057, Rev. 1
Previously Reported: 6/28/91

Safety Evaluation 90-057 Rev. 1 described upgrading of various plant barriers to fire rated as an enhancement to the Fire Protection Program. The Fire Hazards Analysis drawing B-40146-C was further revised to indicate that the one-hour rating of the slab at elevation 298'-0" in the reactor building is excluded above the instrument room at elevation 281'-0".

Safety Evaluation No.: 91-028
Previously Reported: 6/29/92

UFSAR pages VII-15 and XVI-113 have been revised to be consistent with the design basis reconstitution suppression chamber heatup analysis regarding containment spray system capability, as described in Safety Evaluation 91-028.
