501	502	DIVISION I ADS SYSTEM INOPERABLE 503 ▲	DIVISION II ADS SYSTEM INOPERABLE 504 ▲	NITROGEN SYSTEM TROUBLE 505	PRI CONTMT NITROGEN GAS PURGE TEMP LOW 506	507	508	509	DIVISION II REMOTE SHTDWN XFER SWITCH IN EMER POSN 510
511	ADS AIR CPRSR 2 AUTO TRIP/ FAIL TO START 512	ADS AIR SYSTEM TROUBLE 513	ADS AIR HEADER A TROUBLE 514	ADS AIR HDR B TROUBLE 515	ADS ISOL VALVE 164 LOCA OVERRIDE 516	ADS ISOL VALVE 166 LOCA OVERRIDE 517	ADS ISOL VALVE 165 LOCA OVERRIDE 518	ADS ISOL VALVE 184 LOCA OVERRIDE 519	520
DIVISION I ADS AUTOMATIC INITIATION DISABLED 521	DIVISION II ADS AUTOMATIC INITIATION DISABLED 522	ADS SYSTEM LOGIC A INITIATED 523	ADS SYSTEM LOGIC B INITIATED 524	ADS SYSTEM LOGIC E INITIATED 525	ADS SYSTEM LOGIC F INITIATED 526	ADS LOGIC A TEST PROCEDURE FAULT 527	ADS LOGIC B TEST PROCEDURE FAULT 528	ADS LOGIC A REACTOR WTR LEVEL LOW CONFIRMED 529	ADS LOGIC B REACTOR WTR LEVEL LOW CONFIRMED 530
ADS A SYSTEM LOGIC TIMER INITIATED 531	ADS B SYSTEM LOGIC TIMER INITIATED 532	ADS A MANUAL INITIATION SW ARMED 533	ADS B MANUAL INITIATION SW ARMED 534	SAFETY RELIEF VLV LOGIC A PRES SETPOINT EXCEEDED 535	SAFETY RELIEF VLV LOGIC E PRES SETPOINT EXCEEDED 536	ADS VALVES/ SAFETY VALVES LEAKING 537	SAFETY/RELIEF VALVES POWER FAILURE 538	ADS A LPCS/ RHR A PERMISSIVE 539	ADS B RHR B/ RHR C PERMISSIVE 540
SAF/RLF VALVE CARD OUT/ POWER FAILURE 541	SAF/RLF VALVE CARD IN CAL/ GROSS FAILURE 542	SAFETY RELIEF VALVE SWITCH IN OFF POSITION 543	ADS HEADER A FLOW SPLY VLV LOSS OF POWER 544	ADS HEADER B FLOW SPLY VLV LOSS OF POWER 545	546	547	SAFETY/RELIEF VALVE OPEN 548	549	SUPPRESSION POOL WATER TEMP HIGH/HIGH 550
551	552	ADS ACC TANK 32/33/34 PRESSURE LOW 553	ADS ACC TANK 35/36/37/38 PRESSURE LOW 554	555	DRYWELL VACUUM BRKR INBOARD DISC OPEN 556	DRYWELL VACUUM BRKR OUTBOARD DISC OPEN 557	558	PRIMARY CONTAINMENT TEMPERATURE HIGH 559	SUPPRESION POOL WATER TEMP HIGH 560

ANNUNCIATOR 601500

NP-601-AV

NP-601-T

RHR C SYSTEM INOPERABLE 601 ▲	DIVISION II RHR DRYWELL PRESS HIGH 602 ▲	DIVISION II RHR REAC WTR LVL LOW 603	604	605	606	607	608	609	610
RHR PUMP ROOM C FLOODING 611	RHR PUMP 1C AUTO START 612	RHR PUMP 1C AUTO TRIP 613	RHR PUMP 1C MOTOR ELEC FAULT 614	RHR PUMP 1C MOTOR OVERLOAD 615	RHR PUMP 1C DISCH PRESS ABNORMAL 616	RHR C INJ VLV 24C OPEN PERMISSIVE 617	RHR C SYSTEM VALVES MOTOR OVERLOAD 618	RHR PUMP 1C SUCTION PRESS ABNORMAL 619	RHR C HIGH PT VENT LEVEL LOW 620
621	622	623	624	625	626	627	628	629	630
RHR B SYSTEM INOPERABLE 631 ▲	632	633	634	635	636	637	638	639	640
RHR PUMP ROOM B FLOODING 641	RHR PUMP 1B AUTO START 642	RHR PUMP 1B AUTO TRIP 643	RHR PUMP 1B MOTOR ELEC FAULT 644	RHR PUMP 1B MOTOR OVERLOAD 645	RHR PUMP 1B DISCH PRESS ABNORMAL 646	RHR B INJ VALVE 24B OPEN PERMISSIVE 647	RHR B SYS VALVES/ WATER LEG PMP MOT OVERLOAD 648	RHR B VLV 2B AND 4B OPEN 649	RHR B HT EXCH 1B OUTLET COND HIGH 650
RHR B SYSTEM ACTUATED 651	RHR B MANUAL INITIATION SW ARMED 652	DIVISION II RHR ISOLATOR 125V POWER FAILURE 653	DIVISION II RHR ISOLATOR OUTPUT CARD OUT OF FILE 654	DIVISION II RHR ISOLATOR INPUT CD OUT/ 24V PWR FAIL 655	DIVISION II RHR ASC TRIP UNIT TROUBLE 656	RHR PUMP 1B SUCTION PRESS ABNORMAL 657	RHR B HIGH PT VENT LEVEL LOW 658	RHR WTR LEG PMP 2 DISCH PRESS LOW 659	RHR STEAM TRAP TROUBLE 660

ANNUNCIATOR 601600

NP-601-AW

NP-601-AB

DIVISION I STBY LIQ CONT SYSTEM INOPERABLE 701 ▲	DIVISION II STBY LIQ CONT SYSTEM INOPERABLE 702 ▲	703	704	705	HPCS SYSTEM INOPERABLE 706 ▲	HPCS DRYWELL PRESSURE HIGH 707	HPCS REACTOR WATER LEVEL LOW 708	709	HPCS PUMP 1 MOTOR ELEC FAULT 710
SLCS TANK 1 TEMPERATURE HIGH/LOW 711	SLCS TANK 1 LEVEL HIGH/LOW 712	SLCS PUMP 1A VALVE 1A/5A MOT OVERLOAD 713	SLCS PUMP 1B VALVE 1B/5B MOT OVERLOAD 714	715	HPCS CNDS TK 1B LEVEL LOW 716	SUPPRESSION POOL LEVEL HIGH 717	HPCS REACTOR WATER LEVEL HIGH 718	HPCS SYS PRESS PMP DISCH PRESS LOW 719	HPCS PUMP 1 SUCTION PRESS HIGH/LOW 720
DIVISION I SLCS STOR TANK LVL LOW 721	DIVISION II SLCS STOR TANK LVL LOW 722	723	724	725	HPCS MANUAL INITIATION SW ARMED 726	HPCS ASSOCIATED TRIP UNIT TROUBLE 727	HPCS PUMP 1 AUTO TRIP/ OUT OF SER 728	HPCS PRESS PUMP 2 VALVES MOT OVERLOAD 729	HPCS PUMP 1 MOTOR OVERCURRENT 730
DIVISION I RRCS RWCU ISOLATED 731	DIVISION II RRCS RWCU ISOLATED 732	733	734	735	HPCS ISOLATOR 125V POWER FAILURE 736	HPCS ISOLATOR OUTPUT CARD OUT OF FILE 737	HPCS ISOLATOR INPUT CD OUT/ 24V PWR FAIL 738	HPCS PUMP ROOM FLOODING 739	HPCS HIGH PT VENT LEVEL LOW 740
741	742	743	744	745	746	747	748	749	750
751	752	753	754	755	PANEL 632 ISOLATOR OUTPUT CARD OUT OF FILE 756	PANEL 632 ISOLATOR POWER FAILURE 757	PANEL 613 ISOLATOR OUTPUT CARD OUT OF FILE 758	PANEL 642 ISOLATOR POWER FAILURE 759	760

ANNUNCIATOR 601700

NP-601-AX

NP-601-Z

QA CAT. II

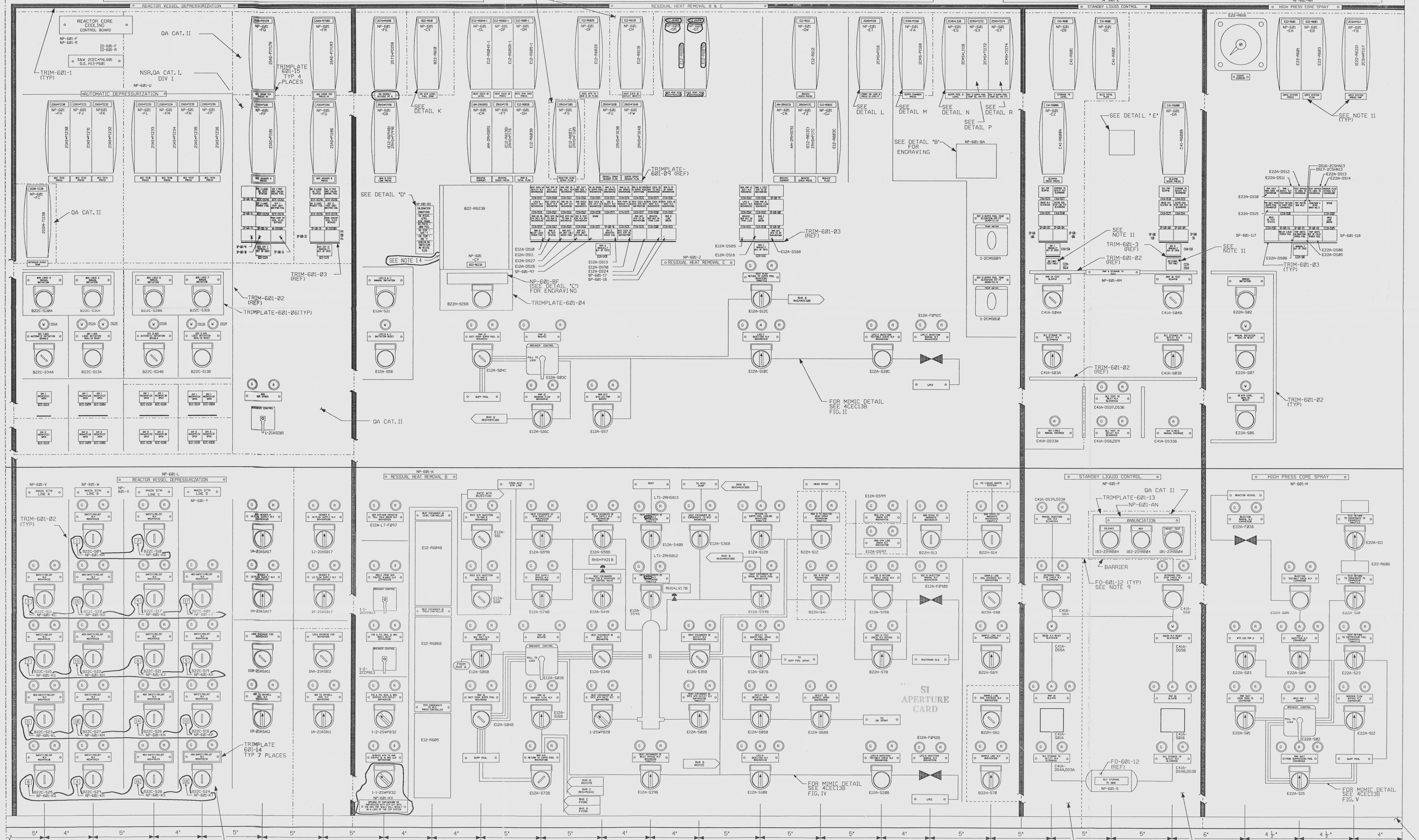
NP-601-AA
REACTOR VESSEL DEPRESSURIZATION
RESIDUAL HEAT REMOVAL B & C
STANDBY LIQUID CONTROL
HIGH PRESS CORE SPRAY
REACTOR CORE COOLING CONTROL BOARD
NP-601-F
NP-601-R
ID-601-F
ID-601-R
S&W 2CEC*PNL601
G.E. H13-P601
TRIM-601-1 (TYP)
QA CAT. II
NSR,QA CAT. I, DIV I
NP-601-U
AUTOMATIC DEPRESSURIZATION
TRIMPLATE 601-15 TYP 4 PLACES
NP-601-FQ
NP-601-FR
NP-601-FF
NP-601-FG
NP-601-FH
NP-601-FJ
NP601-FK
NP-601-FL
NP-601-FM
NP-601-FN
NP-601-FP
NP-601-FC
2GSN-TI138
NITROGEN PURGE TEMP
ACC TK32 PRESS
ACC TK33 PRESS
ACC TK34 PRESS
ACC TK35 PRESS
ACC TK36 PRESS
ACC TK37 PRESS
ACC TK38 PRESS
ADS HEADER A PRESS
ADS HEADER B PRESS
TRIM-601-03 (REF)
TRIM-601-02 (REF)
TRIMPLATE-601-06(TYP)
ADS LOGIC A MANUAL INITIATION
ADS LOGIC E MANUAL INITIATION
ADS LOGIC B MANUAL INITIATION
ADS LOGIC F MANUAL INITIATION
B22C-S30A
B22C-S31A
B22C-S30B
B22C-S31B
DS1A
DS2A
DS2E
DS1B
DS2B
DS2F
DIV I ADS AUTOMATIC INITIATION DISABLE
DIV I ADS LOGIC INITIATION SEAL-IN RESET
DIV II ADS AUTOMATIC INITIATION DISABLE
DIV II ADS LOGIC INITIATION SEAL-IN RESET
B22C-S34A
B22C-S13A
B22C-S34B
B22C-S13B
ADS AIR CPRSR
BREAKER CONTROL
1-2IASD01
QA CAT. II
CONTINUED ON 4CEC13A-2
NP-601-FE
NP-601-CV
NP-601-GB
B22-R610
SEE DETAIL K
SEE DETAIL "D"
SEE NOTE 14
NP-601-CY
B22-R623B
B22H-S26B
NP-601-BF (SEE DETAIL "C") FOR ENGRAVING
TRIMPLATE-601-04
E12A-S21
E12A-S56
NP-601-DL
NP-601-DP
NP-601-DM
NP-601-CM
NP-601-FY
NP-601-DH
NP-601-DF
NP-601-DV
NP-601-DR
NP-601-DT
NP-601-FS
NP-601-FU
NP-601-FW
TRIMPLATE-601-09 (REF)
E12A-DS10
E12A-DS11
E12A-DS27
E12A-DS28
SP-601-97
E12A-DS13
E12A-DS90
E12A-DS24
SP-601-17
SP-601-18
E12A-DS85
E12A-DS18
E12A-DS88
NP-601-J
RESIDUAL HEAT REMOVAL C
E12A-S04C
E12A-S03C
E12A-S16C
E12A-S57
E12A-S12C
E12A-S10C
E12A-S20C
E12A-F092C
LPCI
FOR MIMIC DETAIL SEE 4CEC13B FIG. II
NP-601-DW
NP-601-CN
NP-601-FZ
NP-601-DJ
NP-601-ET
NP-601-FA
NP-601-EQ
NP-601-EX
NP-601-EY
SEE DETAIL L
SEE DETAIL M
SEE DETAIL N
SEE DETAIL R
SEE DETAIL P
SEE DETAIL "B" FOR ENGRAVING
NP-601-BA
TRIM-601-03 (REF)
1-2CMSB09
1-2CMSB10
NP-601-DB
NP-601-DC
NP-601-CZ
NP-601-DA
SEE DETAIL 'E'
SEE NOTE 11
TRIM-601-3 (REF)
TRIM-601-02 (REF)
NP-601-AM
C41A-S04A
C41A-S04B
C41A-S03A
C41A-S03B
C41A-DS33A
C41A-DS37,DS36
C41A-DS8,DS9
C41A-DS33B
E22-R616
NP-601-EA
NP-601-EB
NP-601-FB
SEE NOTE 11 (TYP)
E22A-DS10
E22A-DS11
E22A-DS12
E22A-DS13
E22A-DS14
E22A-DS15
DS16-2CSHN13
DS17-2CSHN13
SP-601-117
SP-601-118
E22A-DS08
E22A-DS06
E22A-DS05
TRIM-601-03 (TYP)
TRIM-601-02 (TYP)
E22A-S02
E22A-S07
E22A-S06
NP-601-L
REACTOR VESSEL DEPRESSURIZATION
NP-601-V
NP-601-W
NP-601-X
NP-601-Y
MAIN STM LINE A
MAIN STM LINE B
MAIN STM LINE C
MAIN STM LINE D
TRIM-601-02 (TYP)
B22C-S09 NP-601-KA
B22C-S10 NP-601-KB
B22C-S11 NP-601-KC
B22C-S20 NP-601-KD
B22C-S17 NP-601-KE
B22C-S08 NP-601-KF
B22C-S15 NP-601-KG
B22C-S22 NP-601-KH
B22C-S21 NP-601-KJ
B22C-S19 NP-601-KK
B22C-S23 NP-601-KL
B22C-S27 NP-601-KM
B22C-S26 NP-601-KN
B22C-S18 NP-601-KP
B22C-S25 NP-601-KQ
B22C-S29 NP-601-KR
B22C-S28 NP-601-KS
B22C-S24 NP-601-KT
TRIMPLATE 601-14 TYP 7 PLACES
DETAIL "S" (TYP) 4CEC13B
1A-2IASA17
1J-2IASB17
1H-2IASA17
1K-2IASB17
1BB-2IASA11
1AA-2IASB11
1B-2IASA11
1A-2IASB11
NP-601-K
RESIDUAL HEAT REMOVAL B
E12A-LT-F097
1-1-2CCPB13
1-2-2CCPB13
1-2-2SWPB32
1-1-2SWPB32
NP-601-KV
E12-R604B
E12-R606B
E12-R605
E12A-S61
E12A-S60
E12A-S06B
E12A-S04B
E12A-S59B
E12A-S74B
E12A-S03B
E12A-S16B
E12A-S73B
E12A-S58B
RHS*PV21B
E12A-S41B
E12A-S34B
1-2SWPB20
LT1-2RHSB13
LT1-2RHSB12
E12A-S40B
RHS*LV17B
E12A-S54B
E12A-S39B
E12A-S36B
E12A-S35B
E12A-S02B
E12A-S12B
E12A-S37B
E12A-S07B
E12A-S05B
E12A-S68B
E12A-S10B
B22H-S12
B22H-S4
E12A-DS99
E12A-DS97
E12A-S15B
B22H-S78
E12A-F090B
B22H-S13
B22H-S14
B22H-S80
B22H-S69
B22H-S82
B22H-S70
E12A-F092B
E12A-S20B
LPCI
FOR MIMIC DETAIL SEE 4CEC13B FIG. IV
STANDBY LIQUID CONTROL
NP-601-P
QA CAT II
TRIMPLATE-601-13
NP-601-AN
ANNUNCIATION
SILENCE
ACK
RESET TEST
1B3-2IHAB04
1B2-2IHAB04
1B1-2IHAB04
BARRIER
C41A-DS39,DS38
FO-601-12 (TYP) SEE NOTE 9
C41A-S6A
C41A-S6B
C41A-DS5A
C41A-DS5B
C41A-S01A
C41A-S01B
C41A-DS4A,DS3A
C41A-DS4B,DS3B
FO-601-12 (REF)
SLC STORAGE TK ANNR
NP-601-S
HIGH PRESS CORE SPRAY
NP-601-M
E22A-F038
E22A-S11
E22-R606
E22A-S05
E22A-S10
E22A-S03
E22A-S04
E22A-S23
E22A-S01
E22B-S02
E22A-S12
E22A-S15
FOR MIMIC DETAIL SEE 4CEC13B FIG. V
5"
4"
2'-4"
BAY E
4'-7"
BAY F
2'-7 1/8"
BAY G
6"
4 1/2"

NSR, QA CAT. I, DIV I EXCEPT ITEMS ENCLOSED BY BARRIERS. BARRIERED ITEMS ARE NSR, QA CAT. I, DIV II UNLESS OTHERWISE NOTED.

NSR, QA CAT. I, DIV II EXCEPT ITEMS ENCLOSED BY BARRIERS. BARRIERED ITEMS ARE NSR, QA CAT. I, DIV I UNLESS OTHERWISE NOTED.

NSR,QA CAT. I,DIV I

NSR,QA CAT. I,DIV II

NSR,QA CAT. I,DIV III

SI APERTURE CARD

9305040006-01

NP-601-BA (5.00" × 5.00")

2CMS*TI172 (EL 199 FT)

SW POSN	TE	AZ	SW POSN	TE	AZ
1	50B	14DEG	7	56B	230DEG
2	51B	50DEG	8	57B	264DEG
3	52B	84DEG	9	58B	302DEG
4	53B	122DEG	10	59B	341DEG
5	54B	156DEG	11		
6	55B	193DEG	12	-OFF	

2CMS*TI174 (EL 197 FT)

SW POSN	TE	AZ	SW POSN	TE	AZ
1	69B	223DEG	7		
2	70B	323DEG	8		
3			9		
4			10	67B	39DEG
5			11	68B	150DEG
6			12	-OFF	

.03 X45° CHAMFER

DETAIL "B"

LETTERS TO BE 5/32" HIGH CONDENSED HELVETICA X .02" STROKE WIDTH

NP-601-BD (4" × 1 1/2")

CALIBRATION CONDITIONS
RX VESSEL LEVEL WIDE RANGE
RX PRESS = 1000 PSIG
RX TEMP = 545 °F
DW TEMP = 135 °F
SUBCOOLING 20BTU/LBM NO RECIRC FLOW

DETAIL "D"

LETTERS TO BE 5/32" HIGH CONDENSED HELVETICA X .02" STROKE WIDTH

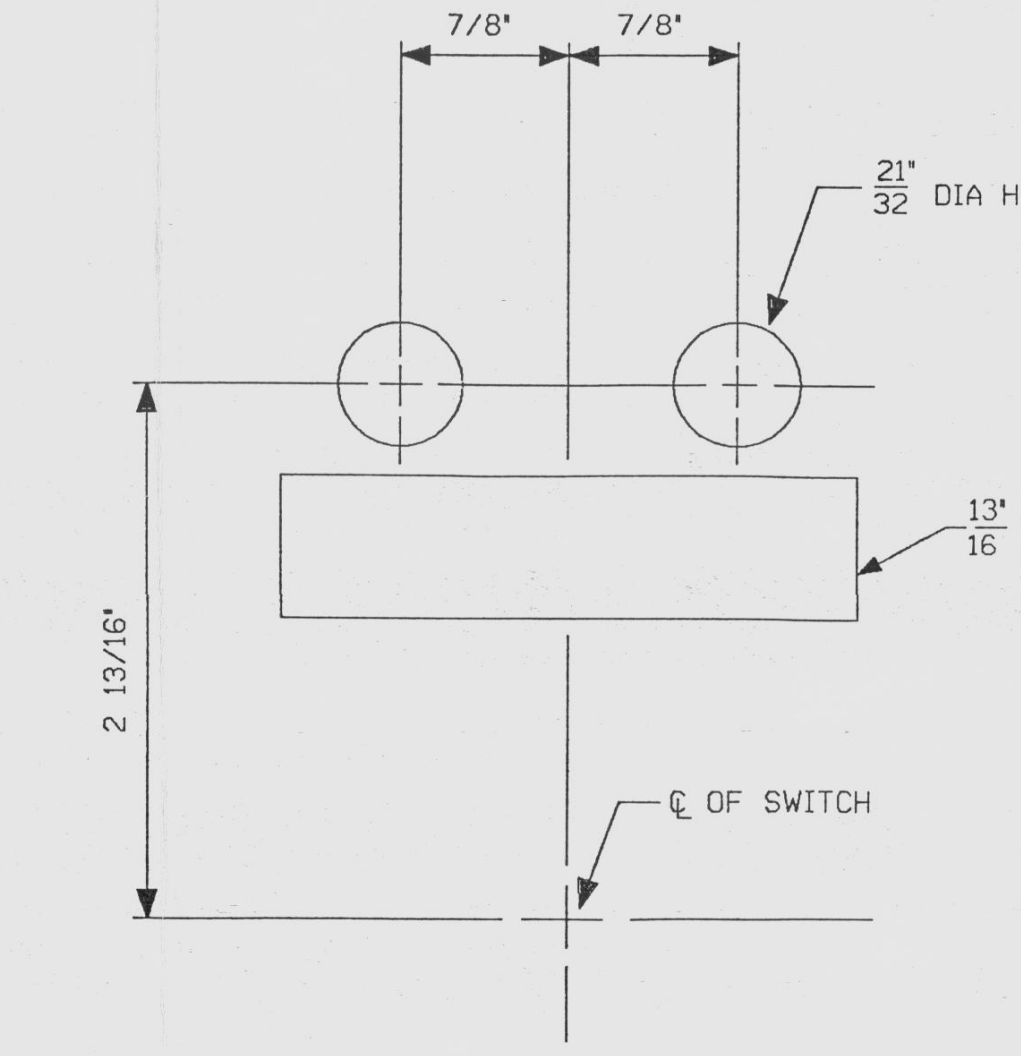
7/8"
7/8"
21/32" DIA HOLE (REF)
13/16" X 3" NAMEPLATE (REF)
2 13/16"
℄ OF SWITCH

DETAIL "A"

TYPICAL FOR ALL SWITCHES WITH ONE SET OF ROUND INDICATING LIGHTS, UNLESS OTHERWISE SPECIFIED.

NP-601-BF

REACTOR
Ⓡ 2ISC*PR1623B PRESS Ⓑ 2ISC*LIS1691B WATER LEVEL

NAMEPLATE TO BE 5.00" X .812" LAMICOID, WHITE WITH BLACK CORE, CONDENSED HELVETICA FONT CHARACTERS .156 HIGH

DETAIL "C"

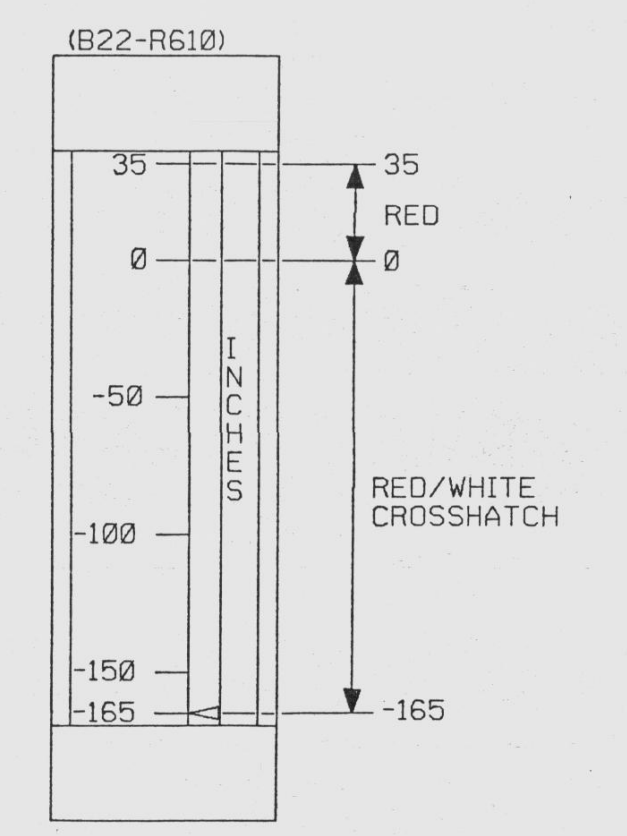
(B22-R610)
35
0
-50
-100
-150
-165
INCHES
RED
RED/WHITE CROSSHATCH

DETAIL K

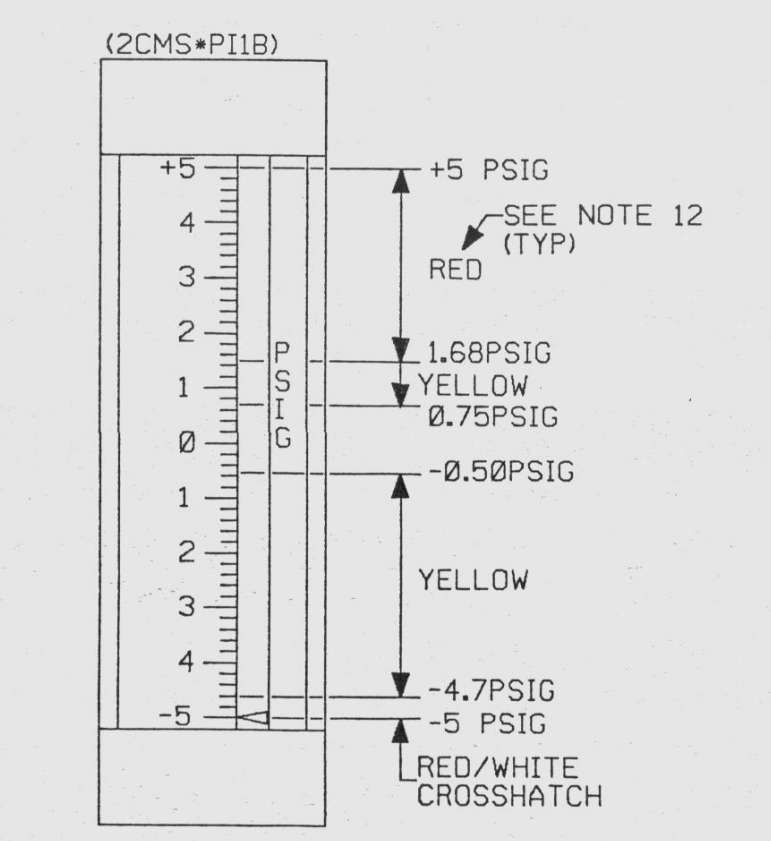
(2CMS*PI1B)
+5 PSIG
SEE NOTE 12 (TYP)
RED
1.68PSIG
YELLOW
0.75PSIG
-0.50PSIG
YELLOW
-4.7PSIG
-5 PSIG
RED/WHITE CROSSHATCH
PSIG

DETAIL L

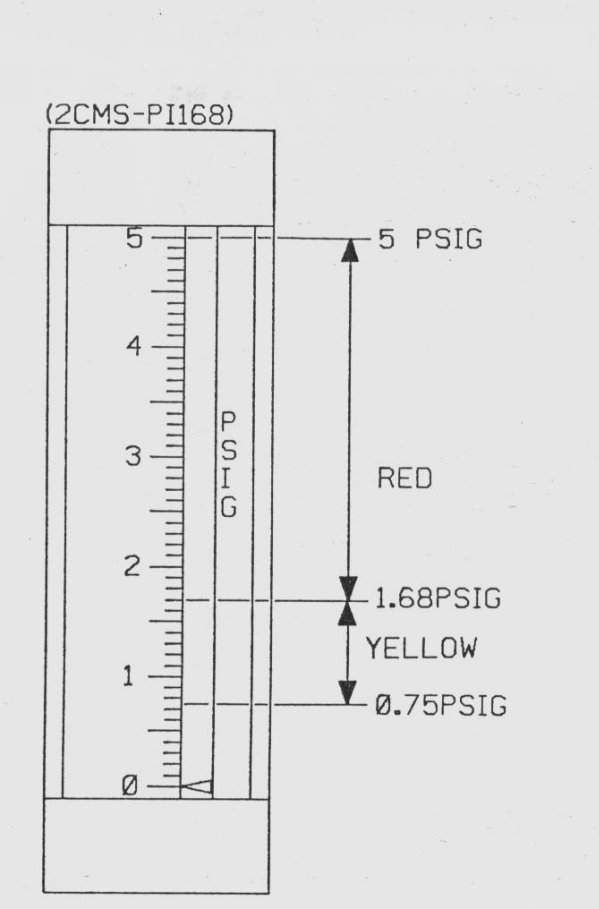
(2CMS-PI168)
5 PSIG
RED
1.68PSIG
YELLOW
0.75PSIG
PSIG

DETAIL M

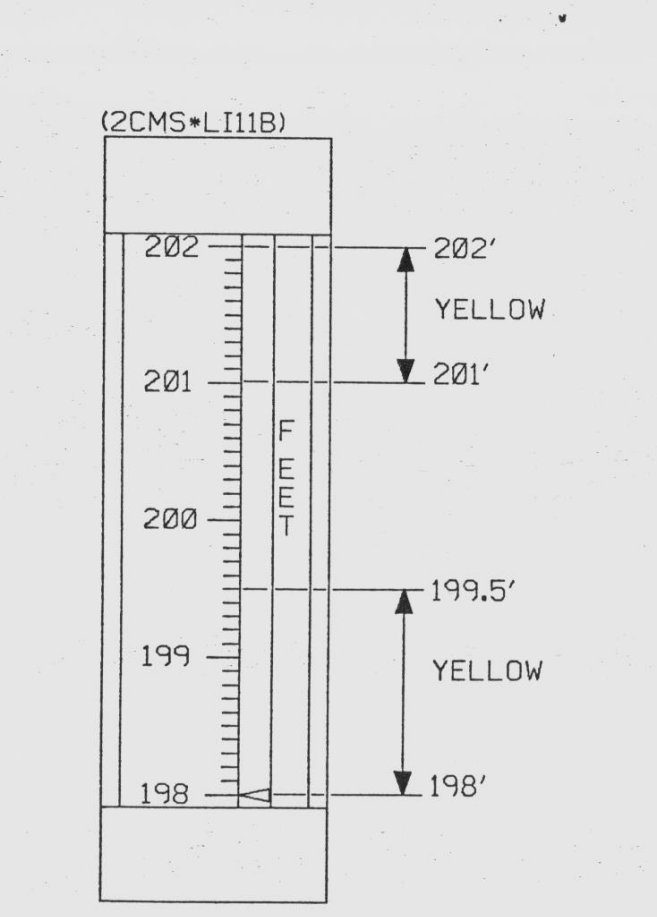
(2CMS*LI11B)
202'
YELLOW
201'
199.5'
YELLOW
198'
FEET

DETAIL N

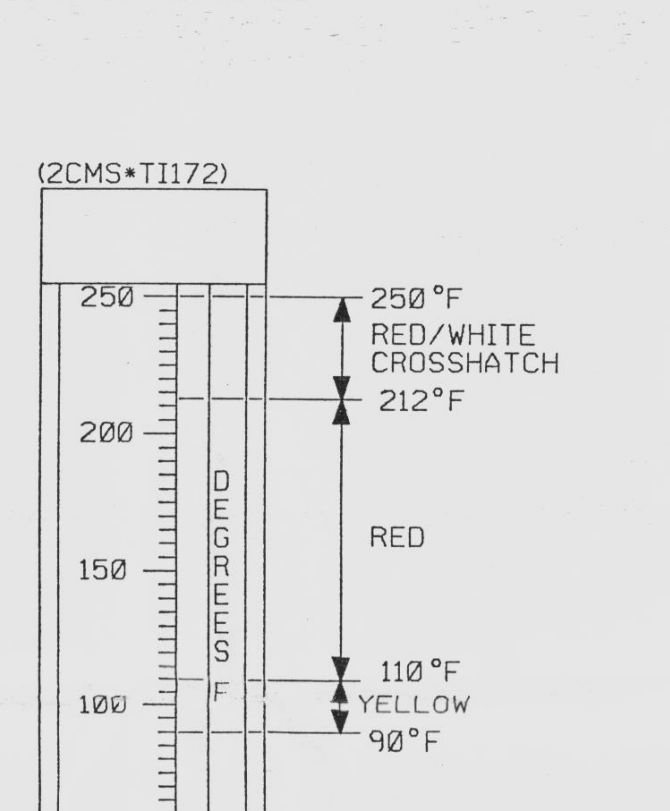
(2CMS*TI172)
250°F
RED/WHITE CROSSHATCH
212°F
RED
110°F
YELLOW
90°F
DEGREES F

DETAIL P

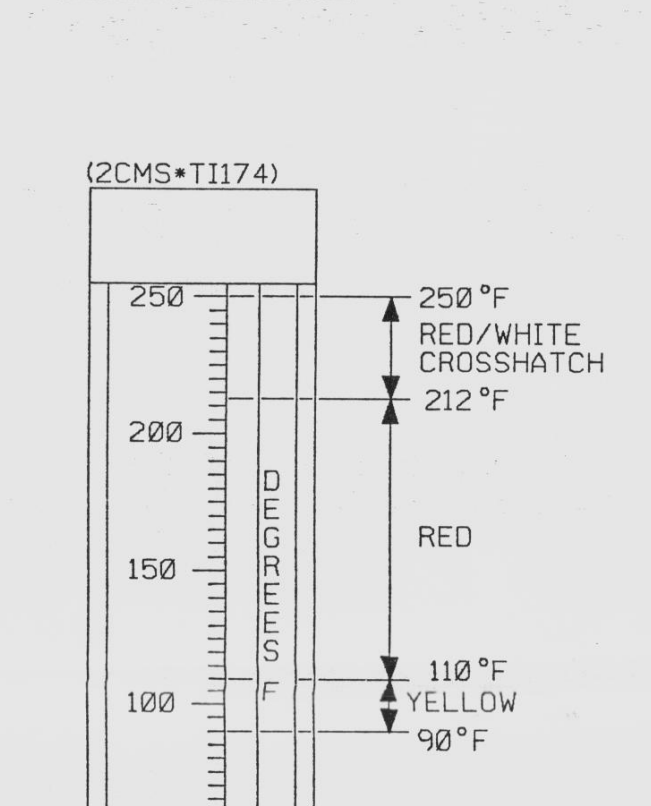
(2CMS*TI174)
250°F
RED/WHITE CROSSHATCH
212°F
RED
110°F
YELLOW
90°F
DEGREES F

DETAIL R

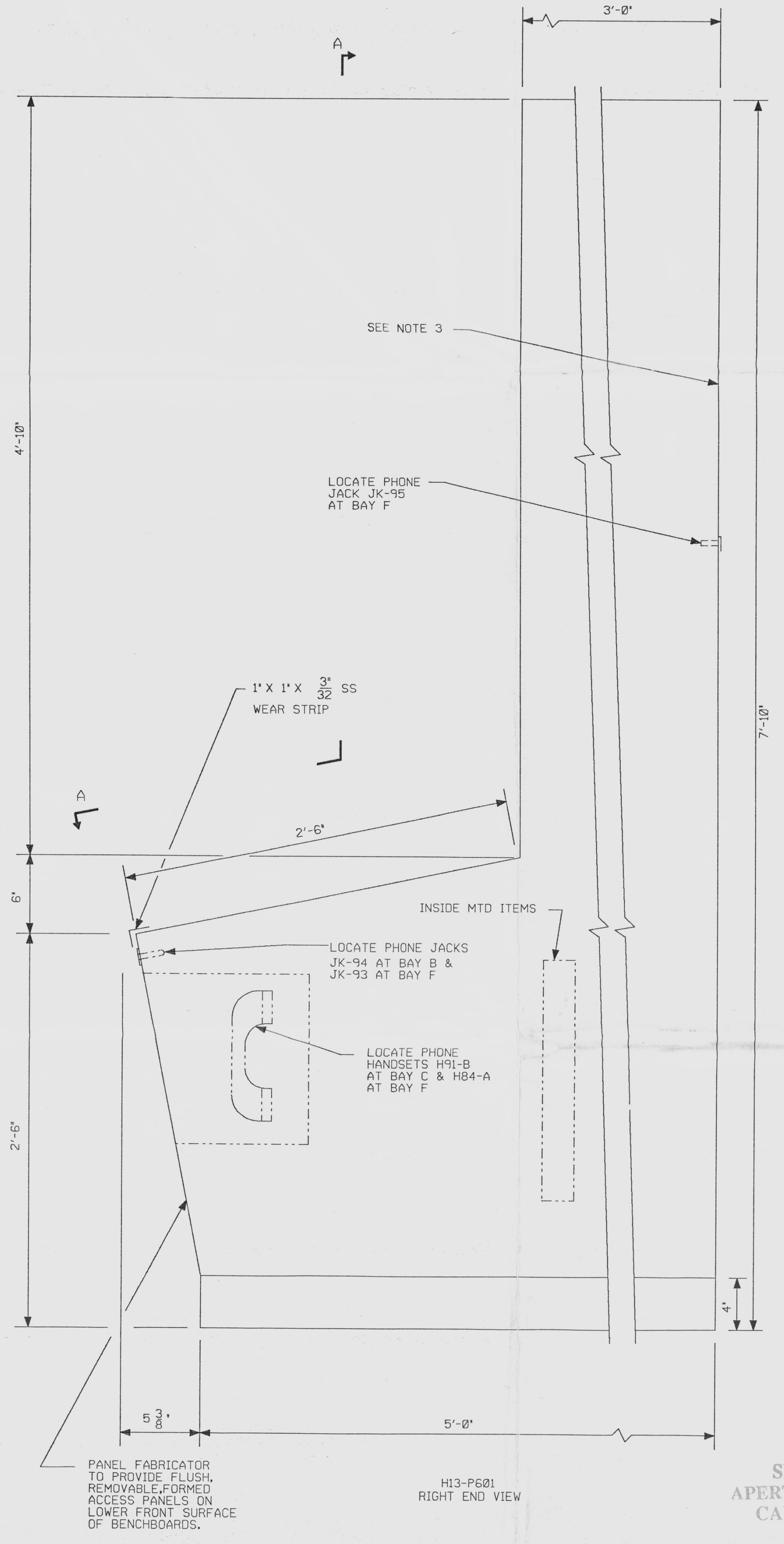
3'-0"
A
SEE NOTE 3
LOCATE PHONE JACK JK-95 AT BAY F
4'-10"
7'-10"
1" X 1" X 3/32" SS WEAR STRIP
2'-6"
6"
LOCATE PHONE JACKS JK-94 AT BAY B & JK-93 AT BAY F
INSIDE MTD ITEMS
LOCATE PHONE HANDSETS H91-B AT BAY C & H84-A AT BAY F
2'-6"
4"
5 3/8"
5'-0"
PANEL FABRICATOR TO PROVIDE FLUSH, REMOVABLE, FORMED ACCESS PANELS ON LOWER FRONT SURFACE OF BENCHBOARDS.

H13-P601

RIGHT END VIEW

SI APERTURE CARD

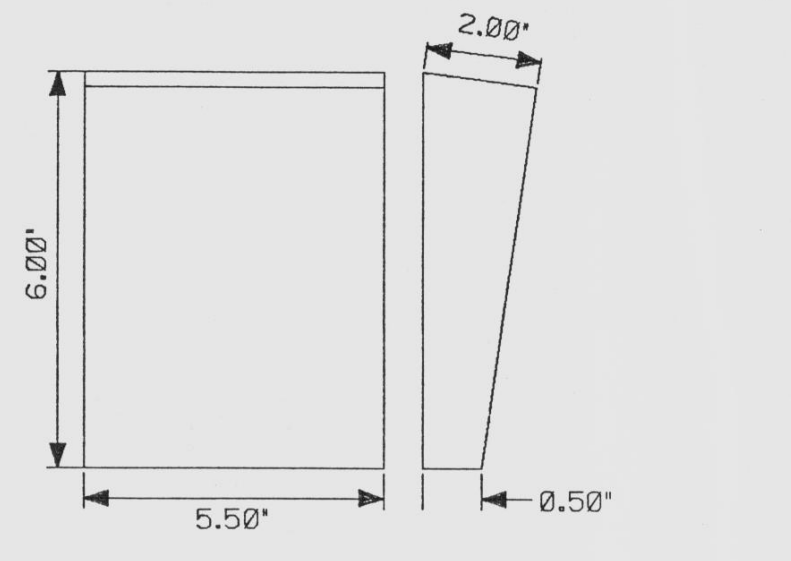
2.00"
6.00"
5.50"
0.50"

DETAIL "E"

ALL DIMENSIONS: ±0.125"
MATERIAL: 20ga. GALVANIZED SHEETMETAL
WEIGHT: 16oz.

MIMIC COLOR CODE CHART

COLOR	FORMICA IDENTIFICATION	APPROVED REPLACEMENT
LT BLUE	928 - FRENCH BLUE	884-CHINA BLUE
DARK BLUE	851 - BANNER BLUE	
GREEN	905 - GAELIC GREEN	883-ISLE GREEN
YELLOW	864 - LEMON TWIST	940-SPECTRUM YELLOW
AVOCADO	844 - SLICED AVOCADO	879-DUSTY JADE
WHITE	949 - WHITE	
SAND	900 - SAND	
RED	845 - SCARLET	845-SPECTRUM RED
BLACK	909 - BLACK	
BROWN	906 - GINGER BROWN	
ORANGE	889 - TAHITI ORANGE	889-SPECTRUM ORANGE
TERRACOTTA	903 - TERRACOTTA	
DARK BROWN	959 - COFFEE BEAN	

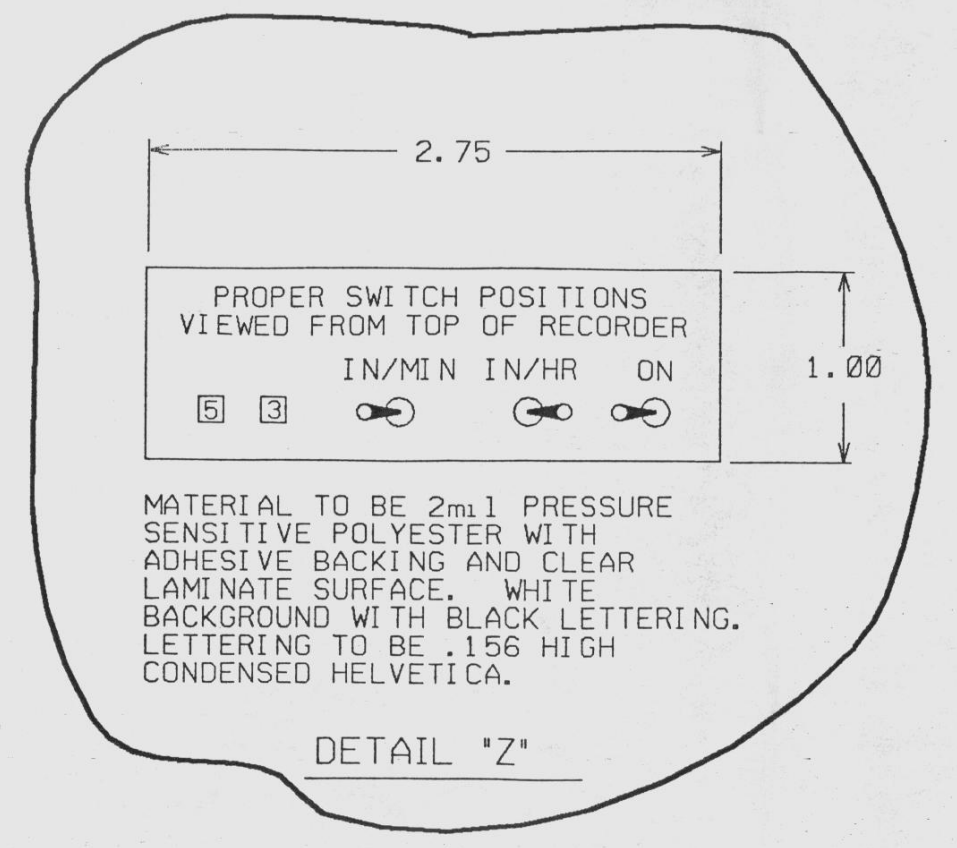
2.75
PROPER SWITCH POSITIONS VIEWED FROM TOP OF RECORDER
IN/MIN
IN/HR
ON
5
3
1.00

MATERIAL TO BE 2mil PRESSURE SENSITIVE POLYESTER WITH ADHESIVE BACKING AND CLEAR LAMINATE SURFACE. WHITE BACKGROUND WITH BLACK LETTERING. LETTERING TO BE .156 HIGH CONDENSED HELVETICA.

DETAIL "Z"

NOTES:

1. UNOCCUPIED PANEL AREA (TYPICAL AS SHOWN) THAT CAN BE USED FOR ADDITION OF COMPONENTS MUST BE KEPT CLEAR OF WIRING, STIFFENERS, ETC. ROUTING OF WIRING TO BE SUCH THAT ADDITION OF COMPONENTS CAN BE DONE WITH MINIMUM OF REWORK.
2. SEE B/M ESK-4CEC113.
3. PROVIDE ACCESS DOORS PER G.E. SPEC NO.22A2877.
4. UNLESS OTHERWISE SPECIFIED, ALL DIMENSIONS SHOWN ARE IN INCHES.
5. TRIM SEPARATORS TO BE ADDED TO FRONT OF PANELS AS SHOWN.
6. DOTTED LINE INDICATES LOCATION OF BARRIER THAT IS TO BE PROVIDED IN REAR OF PANEL.
7. SCALE:NONE
8. MIMIC COMPONENTS (SH B) TO BE INSTALLED ON PANEL USING DOUBLE-BACKED ADHESIVE TAPE. (SEE MIMIC COLOR CODE CHART).
9. MIMIC FOR STANDBY LIQUID CONTROL TO BE .25" WIDE, LENGTH AS REQUIRED AND INSTALLED WITH DOUBLE-BACKED ADHESIVE TAPE.
10. NAMEPLATES FOR G.E. TYPE 180 INDICATORS- SEE B/M ESK-4CEC113, NOTE 2 (A).
11. ☐ DENOTES MASTER SPECIALTIES SWITCH-LIGHT UNIT WHICH IS A PUSHBUTTON/LEGEND INDICATOR LIGHT. A BLACK DOT WILL BE ENGRAVED ON THE UPPER RIGHT HAND CORNER OF ALL PUSHBUTTONS THUS SHOWN TO DISTINGUISH THEM FROM LEGEND INDICATORS. (BLACK DOT TO BE .07 DIA MAX).
12. COLOR BANDING: ZONE BANDS WILL BE APPLIED ON THE GRADUATION PORTION OF THE METER SCALES AND WILL NOT OBSCURE THE NUMERALS, UNITS OR POINTER. RED AND YELLOW COLOR BANDS ARE TO BE MADE OF TRANSPARENT TAPE, 1/8 INCH WIDE. RED-WHITE CROSS HATCH BAND IS TO BE TRANSPARENT TAPE, 1/8 INCH WIDE.
13. FOR ALL PANEL ENTRIES, NAMEPLATES WILL BE SUPPLIED IN ACCORDANCE WITH ESK-2M, FIGURE XXXI-A ENGRAVING TO BE 2 LINES AS FOLLOWS:
    CONTACT SSS
    PRIOR TO PANEL ENTRY
14. INSTALL MARKERPLATE SHOWING RECORDER SWITCH POSITIONS ON RECORDER CHASSIS SIDEPLATE. (B22-R623A AND B) MARKERPLATE IS SHOWN IN DETAIL Z.

REFERENCE DRAWINGS:

CONTROL ROOM ARRGT,	DWG NO. 12177-EE-27A
COMMUNICATIONS PLAN,	DWG NO. 12177-EE-80C

NOTE: THIS DRAWING WAS CREATED USING COMPUTER AIDED DRAFTING. DO NOT MAKE MANUAL CHANGES

07-~~18~~ 27-91

NUCLEAR SAFETY RELATED &
NUCLEAR NON-SAFETY RELATED

9305040006

MK	DATE	BY	MF	DESCRIPTION	CK	APP
17	2/19/91	CEM	M	REVISED PER EDC'S 2E00253, 2E00557A, 2E00564, 2E00577A, 2E00611 (NO CHANGE), 2E10031, 2E10033, AND 2E10161A (NO CHANGE).	aed KJP	
16	11/5/90	JBP		REVISED PER ECN'S CEC823A, CEC830, CEC843 AND CEC858 AND EDC'S 2E00351, 2E00361, 2E00396 AND 2E00408.	AED KJP	AKJ

NIAGARA MOHAWK

NINE MILE POINT
NUCLEAR STATION - UNIT 2
SCRIBA, N.Y.

ARRANGEMENT
REACTOR CORE COOLING
CONTROL BOARD
2CEC*PNL601

SCALE NONE

DRAWING NO ESK-4CEC13A-SH1

9305040006 E