U.S. NUCLEAR REGULATORY COMMISSION REGION I
OPERATOR LICENSING EXAMINATION REPORT

Report No.:	50-410/90-18 (OL)
Docket No.:	50-410
License No.:	NPF-69
Licensee:	Niagara Mohawk Power Corporation 301 Plainfield Road Syracuse, New York 13212
Facility Name:	Nine Mile Point Nuclear Station, Unit No. 2
Examination Dates:	August 20 - 24, 1990
Examiners:	T. Walker, Senior Operations Engineer S. Hansell, Operations Engineer (Observer) J. Hanek, EG&G G. Robinson, Penn State University

CHIEF EXAMINER: N. F. Conicella 11/7/90
Nicola F. Conicella, Senior Operations Engineer — Date
BWR Section, Operations Branch, DRS

REVIEWED BY: Leif R. Settlemyer for 11/7/90
Richard J. Conte, Chief, BWR Section — Date
Operations Branch, DRS

EXECUTIVE SUMMARY:
Written examinations and operating tests were administered to seven (7) senior reactor operator (SRO) candidates and three (3) reactor operator (RO) candidates. All the SROs passed the operating test and the written test. Two (2) ROs passed the operating test and all the ROs passed the written test. One (1) RO failed the operating test.

In general, the candidates were well prepared for the licensing examinations with the following exceptions. Implementation of N2-EOP-SC (Secondary Containment Control) was weak and knowledge of the digital radiation monitoring system (DRMS) was weak. Strengths and weaknesses were identified for feedback into the licensed operator training program.

Deficiencies were identified in the reference material furnished by the licensee for the examination preparation. Specifically, the reference material provided was incomplete. However, the licensee was able to promptly provide reference material when material was requested by the examination team.

Several simulator fidelity discrepancies occurred during the conduct of the examination. The licensee's simulator operators appropriately dispositioned these discrepancies. The simulator discrepancies that occurred did not invalidate or seriously impact the examination.

DETAILS

1.0 INTRODUCTION AND OVERVIEW

The NRC examiners administered replacement examinations to seven (7) senior reactor operator (SRO) candidates and three (3) reactor operator (RO) candidates. The SRO candidates consisted of four (4) instant SROs and three (3) upgrade SROs. The examinations were administered in accordance with NUREG 1021, Rev. 5, dated January 1, 1989, Examiner Standards (ES).

On August 14, 1990, prior to the administration of the written examinations, a pre-examination review was conducted at the NRC Region I office. Present at the review were two members of training department staff, a shift supervisor (SRO) and members of the NRC examination team. Prior to being administered, the simulator scenarios used for the examinations were validated on the plant specific simulator. Two of the licensee's simulator operators assisted with the scenario validation. Each individual involved with the review of the examination material signed a security agreement to ensure there was no compromise of the examination.

2.0 PERSONS CONTACTED

2.1 U.S. Nuclear Regulatory Commission

N. Conicella, Senior Operations Engineer (1,2)
T. Walker, Senior Operations Engineer (1,2)
S. Hansell, Operations Engineer (1,2)
J. Hanek, Consultant (2)

2.2 Niagara Mohawk Power Corporation

A. Rivers, Training Superintendent (2)
M. Coulomb, Unit 2 Operations Superintendent (2)
R. Seifried, Assistant Training Superintendent (2)
G. Corbin, Supervisor, Simulator Technology (2)
J. Kaminski, Assistant Supervisor, Licensed Training (1,2)
G. Bridges, Licensed Operator Instructor (1)
D. Wilson, Station Shift Supervisor (1)
G. Brownell, Generation Specialist (2)
B. Hennigan, Simulator Instructor (GPC) (2)
D. Haas, Simulator Instructor (GPC) (2)

(1) Present at pre-examination review on August 14, 1990.
(2) Present at exit meeting on August 24, 1990

3.0 EXAMINATION RELATED FINDINGS AND CONCLUSIONS

3.1 Examination Results

	RO Pass/Fail	SRO Pass/Fail
Written	3 / 0	7 / 0
Operating	2 / 1	7 / 0
Overall	2 / 1	7 / 0

3.2 Operating Examination

The following is a summary of generic strengths and weaknesses noted on the operating tests. This information is being provided to aid the licensee in upgrading license operator training programs. No written licensee response is required.

Strengths

- SROs command and control over crew performance
- Communications and teamwork
- Use of Technical Specifications by both ROs and SROs
- Overall use of procedures.

Weaknesses

- SRO implementation of N2-EOP-SC
- SRO emergency action level classifications
- Acknowledging and verifying alarms in a timely fashion
- Knowledge of the DRMS

3.3 Written Examination

The following is a summary of generic strengths and weaknesses noted from the grading of the SRO and RO written examinations. This information is being provided to aid the licensee in upgrading license and requalification training programs. No licensee response is required.

Strengths

Any item not listed as a generic weakness below was answered correctly by at least 2 of the 3 ROs or at least 5 of the 7 SROs exposed to that test item.

Weaknesses

Any item listed as a generic weakness was answered incorrectly by at least 2 of the 3 ROs or at least 3 of the 7 SROs exposed to that test item.

Reactor Operator

- Knowledge of starting requirements for reactor recirculation pumps

- Ability to describe the expected response of the RCIC steam admission valve (MOV-120) on a valid initiation signal if the steam admission bypass valve (MOV-159) failed to open

- Knowledge of when the main steam line radiation monitors initiate automatic actions

- Ability to describe the expected response of the fire protection system to a degraded header pressure condition in that system

- Ability to describe the expected response of the reactor recirculation pumps to a main turbine trip

- Knowledge of the EOP basis for the restricted use of certain reactor water level instruments at various drywell temperatures

- Knowledge of the technical specification basis for the minimum spent fuel pool water level

- Knowledge of the EOP basis for reducing reactor recirculation flow to minimum prior to tripping the reactor recirculation pumps

- Knowledge of the preference of communication devices to be used if face-to-face communications is not possible

Senior Reactor Operator

- Knowledge of the technical specification requirements for shift change with the fire brigade not fully staffed

- Knowledge of the fact that low fuel pool level is a condition that requires classification in accordance with the emergency plan

- Knowledge of why reactor power decreases if reactor water level is lowered for a reactor at power

- Knowledge of the correct method to adjust the reactor cooldown rate if operating alternate shutdown cooling

- Knowledge of the EOP basis for the suppression pool water level upper limit of 201 ft.

- Knowledge of the basis for adjusting RWCU reject flow following a reactor scram

3.4 Reference Material

During the preparation of the written and operating examinations some inadequacies in the reference material were noted by the examination team. The following materials were either not supplied or were incomplete as supplied to the NRC for examination preparation: EOP bases; annunciator cross-reference; administrative procedures; and, operations surveillance test procedures. However, the licensee was able to promptly provide reference material when specific material was requested thereby minimizing the impact on examination preparation.

4.0 Exit Interview

On August 24, 1990, an exit interview was conducted with licensee representatives listed in section 2.0 of this report. The examination strengths and weaknesses identified in section 3.2 were discussed.

The control room staff was very cooperative in maintaining an environment conducive for operating test administration.

The simulator operators performed well in ensuring the simulator examinations were administered in accordance with the directives established by the NRC examination team. Additionally, the simulator operators were prompt in dispositioning the simulator fidelity problems that occurred.

Facility access went smoothly with good support from Health Physics and Security.

The final results of the examinations were not presented at the exit meeting, but would be contained in the Examination Report. Every effort would be made to send the applicant's results in approximately 30 working days.

Attachments:
1. Senior Reactor Operator Written Examination and Answer Key
2. Reactor Operator Written Examination and Answer Key
3. Facility Comments on Written Examination
4. NRC Response to Facility Comments
5. Simulation Facility Report

ATTACHMENT 1
Senior Reactor Operator Written Examination and Answer Key

U. S. NUCLEAR REGULATORY COMMISSION
SENIOR REACTOR OPERATOR LICENSE EXAMINATION
REGION 1

FACILITY: Nine Mile Point 2

REACTOR TYPE: BWR-GE5

DATE ADMINISTERED: 90/08/20

MASTER COPY

CANDIDATE:

INSTRUCTIONS TO CANDIDATE:

Points for each question are indicated in parentheses after the question. To pass this examination, you must achieve an overall grade of at least 80%. Examination papers will be picked up four and one half (4 1/2) hours after the examination starts.

NUMBER QUESTIONS	TOTAL POINTS	CANDIDATE'S POINTS	CANDIDATE'S OVERALL GRADE (%)
100	100.00		

All work done on this examination is my own. I have neither given nor received aid.

Candidate's Signature

NRC RULES AND GUIDELINES FOR LICENSE EXAMINATIONS

During the administration of this examination the following rules apply:

1. Cheating on the examination means an automatic denial of your application and could result in more severe penalties.

2. After the examination has been completed, you must sign the statement on the cover sheet indicating that the work is your own and you have not received or given assistance in completing the examination. This must be done after you complete the examination.

3. Restroom trips are to be limited and only one candidate at a time may leave. You must avoid all contacts with anyone outside the examination room to avoid even the appearance or possibility of cheating.

4. Use black ink or dark pencil only to facilitate legible reproductions.

5. Print your name in the blank provided in the upper right-hand corner of the examination cover sheet.

6. Fill in the date on the cover sheet of the examination (if necessary).

7. You may write your answers on the examination question page or on a separate sheet of paper. USE ONLY THE PAPER PROVIDED AND DO NOT WRITE ON THE BACK SIDE OF THE PAGE.

8. If you write your answers on the examination question page and you need more space to answer a specific question, use a separate sheet of the paper provided and insert it directly after the specific question. DO NOT WRITE ON THE BACK SIDE OF THE EXAMINATION QUESTION PAGE.

9. Print your name in the upper right-hand corner of the first page of answer sheets whether you use the examination question pages or separate sheets of paper. Initial each of the following answer pages.

10. Before you turn in your examination, consecutively number each answer sheet, including any additional pages inserted when writing your answers on the examination question page.

11. If you are using separate sheets, number each answer and skip at least 3 lines between answers to allow space for grading.

12. Write "Last Page" on the last answer sheet.

13. Use abbreviations only if they are commonly used in facility literature. Avoid using symbols such as < or > signs to avoid a simple transposition error resulting in an incorrect answer. Write it out.

14. The point value for each question is indicated in parentheses after the question. The amount of blank space on an examination question page is NOT an indication of the depth of answer required.

15. Show all calculations, methods, or assumptions used to obtain an answer.

16. Partial credit may be given. Therefore, ANSWER ALL PARTS OF THE QUESTION AND DO NOT LEAVE ANY ANSWER BLANK. NOTE: partial credit will NOT be given on multiple choice questions.

17. Proportional grading will be applied. Any additional wrong information that is provided may count against you. For example, if a question is worth one point and asks for four responses, each of which is worth 0.25 points, and you give five responses, each of your responses will be worth 0.20 points. If one of your five responses is incorrect, 0.20 will be deducted and your total credit for that question will be 0.80 instead of 1.00 even though you got the four correct answers.

18. If the intent of a question is unclear, ask questions of the examiner only.

19. When turning in your examination, assemble the completed examination with examination questions, examination aids and answer sheets. In addition, turn in all scrap paper.

20. To pass the examination, you must achieve an overall grade of 80% or greater.

21. There is a time limit of (4 1/2) hours for completion of the examination. (or some other time if less than the full examination is taken.)

22. When you are done and have turned in your examination, leave the examination area as defined by the examiner. If you are found in this area while the examination is still in progress, your license may be denied or revoked.

QUESTION: 001 (1.00)

In accordance with AP-4.2, Control Of Equipment Markups, select the ONE statement below that correctly describes the requirement(s) for independent verification when removing or installing a Markup.

a. The Fire Chief must perform the independent verification if it involves the fire protection system.

b. A NRC Licensed Operator must always perform the independent verification.

c. A qualified, Non-Licensed Operator may perform certain independent verifications.

d. A NRC Senior Licensed Operator must perform the independent verification for controls located in the control room.

QUESTION: 002 (1.00)

In accordance with AP-4.2, Control Of Equipment Markups and N2-ODI-5.06, Markups, select the ONE statement below that correctly describes the proper utilization of Blue Markups.

a. A Blue Markup may be used to replace a valve seat assembly if a post repair leak test is required.

b. A Blue Markup may be used in conjunction with a Hold-Out card to allow testing while performing maintenance.

c. The Blue Markup man must be a Niagara Mohawk employee.

d. A Blue Markup used in conjunction with a Red Markup allows operation of equipment for testing before completion of the work.

QUESTION: 003 (1.00)

Federal Regulations will allow a 25 year old radiation worker with a current Form NRC-4 and a previous lifetime whole body exposure of 26 Rem to receive a MAXIMUM of (SELECT ONE) for the coming year.
(Assume the workers twenty fifth birthday is today)

a. 3 rem/quarter for the entire year.

b. 3 rem/quarter not to exceed 5 rem total for the year.

c. 1.25 rem/quarter for the entire year.

d. 3 rem/quarter for 3 quarters in the year.

QUESTION: 004 (1.00)

While making rounds a plant operator using his keycard, is unable to enter a vital area for which he has access.

In accordance with AP-3.1, Control Of Access, select the ONE statement below that correctly describes the procedure that would be utilized to enter this vital area.

a. Use a metal vital area key to enter and notify security when completed.

b. Advise security of your name and ACAD number prior to entering a vital area with a metal vital area key.

c. After a red light is received on the card reader twice, use a metal vital area key to obtain entry, then remain in the vital area for security.

d. Tailgate into the vital area with another authorized operator and inform security your key card is damaged or the card reader is malfunctioning.

QUESTION: 005 (1.00)

In accordance with N2-ODI-5.11, 4.16 and 13.8 KV Breakers, select the ONE statement below that in addition to rubber gloves with leather protectors, correctly describes the personnel safety equipment REQUIRED when electrically racking out a 13.8 KV breaker.

a. Safety glasses and/or a face shield only.

b. Rubber floor mat and hard hat.

c. Hard hat, safety glasses and/or face shield.

d. Rubber floor mat, safety glasses and/or face shield.

QUESTION: 006 (1.00)

In accordance with AP 3.3.1, Site Alara Program, select the ONE statement below that correctly describes the jobs which require a review for exposure reduction techniques by the Unit ALARA Committee.

a. All jobs with an exposure estimate greater than 25 man-rem.

b. All jobs with an exposure estimate greater than 10 man-rem but less than 25 man-rem.

c. All jobs with an exposure estimate greater than 1 man-rem but less than 10 man-rem.

d. All jobs with an exposure estimate greater than 1 man-rem.

QUESTION: 007 (1.00)

In accordance with Station General Order 88-6, Industrial Safety, select the ONE statement below that correctly describes the guidelines for working in high temperature areas.

a. Work time in areas 140 degrees F. or higher is limited to 30 minutes.

b. "Cool vests" should be worn directly on the skin to maximize effectiveness

c A "buddy" system is only required for work in areas where the temperature is greater than 140 degrees F.

d. If the "cool vest" thaws completely it can still be used for an additional 10 minutes, as it still provides some cooling through evaporation.

QUESTION: 008 (1.00)

Select the ONE statement below that correctly describes the manning requirements for the site Fire Brigade if an oncoming crew member calls in to say he/she will be late.

a. This is of no concern as the Tech. Specs. only require four members and the normal shift compliment is five members.

b. The Fire Brigade composition may be less than the required compliment for up to 2 hours following shift change, if action is being taken to restore the full compliment .

c. One of the required licensed control room operators may be included in the required Fire Brigade compliment for up to 4 hours.

d. The Fire Brigade composition may be less than the minimum required compliment for up to 2 hours however, this provision is not allowed upon shift change.

QUESTION: 009 (1.00)

In accordance with N2-ODI-1.06, Verbal Communications, select the ONE statement below that correctly describes the recommended order of preference for communication devices to be used, if face to face communication is not possible during normal operation.

a. Sound powered headsets, in-plant telephones, PA system, hand held radios.

b. Sound powered headsets, hand held radios, PA system, in-plant telephones.

c. PA system, sound powered headsets, in-plant telephones, hand held radios.

d. Hand held radios, PA system in-plant telephones, sound powered headsets.

QUESTION: 010 (1.00)

In accordance with N2-ODI-1.06, verbal Communications, select the ONE statement below that does NOT describe a correct verbal communication procedure operators must use during implementation of the EOPs.

a. Challenge orders they do not agree with.

b. In addition to supplying plant parameter values to the SSS, supply the trend if available.

c. Repeat the SSS's name and the information, until the SSS acknowledges receipt of the information.

d. Provide critical plant parameter data only when requested by the SSS.

QUESTION: 011 (1.00)

In accordance with N2-ODI-1.09, EOP Users Guide, select the ONE statement below that correctly describes the correct implementation and supervision of the EOP's by the control room operators.

a. The SSS must work on emergency planning while the ASSS stabilizes the plant.

b. The ASSS functioning as the STA has only one responsibility; monitoring the SPDS throughout the event.

c. Only licensed operators may be assigned to read control room indicators.

d. Reactor Operators should take the necessary and appropriate steps to insert control rods during ATWS situations, without specific SSS direction.

QUESTION: 012 (1.00)

Due to an outage, a licensed reactor operator is required to work a 16 hour shift at the control boards.

In accordance with AP-4.0, Administration of Operations, when must this operator be relieved for a break period?

a. Every 4 hours during the 16 hour period.

b. Every 4 hours after 8 hours has been worked.

c. Every 2 hours after 8 hours has been worked.

d. Once after 8 hours has been worked.

QUESTION: 013 (1.00)

In accordance with AP-4.0, Administration of Operations, select the ONE statement below that is correct concerning the control room (CSO) and SSS log books.

a. The CSO log book is used for reference only and is not considered a legal document as is the SSS log book.

b. Detailed rod movements in accordance with an approved startup sequence are required to be entered in the CSO log.

c. All valid (other than testing) annunciator signals are required to be logged in the CSO log.

d. The CSO log must be filled out with black ink only.

QUESTION: 014 (1.00)

In accordance with AP-4.0, Administration Of Operations, select the ONE statement below that correctly describes when a reactor operator may deviate from an approved procedure.

a. During emergency events when the EOP's have been entered.

b. If the operator determines that the sequence specified in the procedure is irrelevant.

c. If during the conduct of a procedure the operator determines the procedure is in error.

d. While waiting for the SSS and ASSS to approve and process a non-intent change to a procedure.

QUESTION: 015 (1.00)

During operation at 100% power a plant operator on rounds, discovers a residual heat removal (RHR) system manual valve to be out of its normal position.

In accordance with AP-4.0, Administration Of Operations, select the ONE statement below which correctly describes the action to be taken.

a. Immediately alter the situation and notify security.

b. Alter the situation and immediately notify the SSS.

c. Do not alter the situation and immediately notify the SSS.

d. Inform the CSO of the situation and restore it in accordance with the operating procedure valve lineup sheet.

QUESTION: 016 (1.00)

In accordance with AP-3.2.2, Radiation Work Permit, select the ONE statement below that requires the issuance of an RWP.

a. Entry into an area which has a general area reading of 80 mrem/hour.

b. Entry into an area with contamination levels of 8,500 dpm/100cm2.

c. Entry into an area where it is possible to receive a neutron radiation exposure of 3.0 mrem/hour.

d. Use of a vacuum cleaner in a location with a contamination level of 250 dpm/100cm2.

QUESTION: 017 (1.00)

In accordance with AP-6.1, Control Of Equipment Temporary Modifications, select the ONE statement below that is correct concerning the procedure utilized to defeat an annunciator window.

a. If required due to a malfunctioning component (pressure switch) in the annunciator circuit, a temporary modification tag is attached to that component.

b. All annunciators defeated with temporary modifications are identified with a temporary modification tag in the affected window.

c. The lifted lead and jumper log is used to log all annunciators defeated with temporary modifications.

d. A sticker attached to the annunciator window is used to identify defeated annunciators.

QUESTION: 018 (1.00)

Following failure of the Division 2 uninterruptible power supply (UPS) caused by a fault in the static invertor, which of the following supplies the Division 2 UPS distribution panel, 2VBA*UPS2B?

a. Backup power from 125 VDC switchgear 2BYS*SWG002B.

b. Alternate power from 2LAC*PNL300B.

c. Normal Power from 2EJS*PNL300B via a static transfer switch.

d. Division 1 UPS distribution panel 2VBA*UPS2A.

QUESTION: 019 (1.00)

While operating at 100 percent power a loss of voltage from reserve station service transformer 1A occurs.

Select the ONE statement below which correctly describes the expected response of the emergency AC power system.

a. Division 1 emergency diesel starts, the generator breaker closes and load sequencing begins.

b. Division 1 emergency diesel starts and runs on no-load.

c. Bus ENS*SWG102 automatically transfers to a backup source from the auxiliary boiler transformer.

d. Bus ENS*SWG102 automatically transfers to a backup source from reserve station service transformer, 1B.

QUESTION: 020 (1.00)

A turbine trip and a reactor scram has occurred after an extended period of full power operation

Select the ONE statement below that correctly describes the preferred method of controlling RPV pressure below 1076 psig, in accordance with N2-EOP-RPV, RPV Control EOP.

a. Reactor Core Isolation Cooling (RCIC).

b. Main steam line drains.

c. Main turbine bypass valves.

d. Safety Relief Valves (SRVs).

QUESTION: 021 (1.00)

Select the ONE statement below that is correct concerning the shutdown cooling (SDC) mode of the residual heat removal (RHR) system.

a. Reactor pressure >128 psig will generate an automatic isolation signal for the SDC containment isolation valves (MOV-112 & 113), SDC return valves (MOV-40A & B), SDC bypass valves (MOV-67A & B) and reactor head spray valve (MOV-104).

b. Reactor pressure >128 psig will only generate an automatic isolation signal for the SDC containment isolation valves (MOV-112 & 113), SDC return valves (MOV-40A & B) and trip the RHR pumps.

c. Reactor vessel level <159.3" will generate an automatic isolation signal for the SDC containment isolation valves (MOV-112 & 113), and interlock closed the suppression pool spray (MOV-33A & B) and test return (MOV-30A & B) valves.

d. A drywell high pressure signal >1.68 psig will generate both an automatic RHR sample and radwaste discharge (Group 4), and a SDC and reactor head spray valve (Group 5) containment isolation signals.

QUESTION: 022 (1.00)

Select the ONE statement below that correctly describes the signal that will result in a closure of the reactor water cleanup system, containment isolation valves (Both MOV 102 & 112).

a. Starting standby liquid system pump A.

b. Non-regenerative heat exchanger outlet temperature >140 degrees F.

c. Low-Low reactor vessel level <108"

d. Less than 5 psig sensed upstream of the reject flow control valve, FV-135.

QUESTION: 023 (1.00)

RPV Control, N2-EOP-RPV, Section RL, contains a table which cautions the operator not to use the RPV water level instruments below a minimum indicated level, with drywell temperatures below 350 degrees F. and at/or above 350 degrees F.

Which ONE of the following correctly describes the basis for the minimum RPV indicated level, when drywell temperature is at or above 350 degrees F.?

a. Reference leg flashing will cause indicated level to be stable, while actual level is decreasing.

b. Natural circulation flow through the Jet Pumps results in a higher indicated level than actual.

c. Variable leg flashing will cause indicated level to be higher than actual.

d. Reference leg flashing could cause indicated level to be stable or increasing while actual level is below the lower instrument tap.

QUESTION: 024 (1.00)

Select the ONE plant condition that is NOT an entry condition for RPV Control, N2-EOP-RPV.

a. RPV level 161 inches.

b. Drywell pressure 1.70 psig.

c. RPV pressure 1057 psig.

d. A Group 1 isolation has occurred.

QUESTION: 025 (1.00)

Select the ONE statement below that correctly describes the basis for the following procedural step in N2-EOP-PC, Primary Containment Control; "IF any stuck open SRV can not be closed within 5 minutes, place the Reactor Mode Switch in Shutdown".

a. One Stuck open SRV exceeds the design heat removal capacity of both loops of suppression pool cooling.

b. The Heat Capacity Temperature Limit (HCTL) will be exceed after 5 minutes.

c. The RHR System will not be available for suppression pool cooling for ten minutes, if a LOCA signal is present.

d. Prolong the availability of the suppression pool as a heat sink.

QUESTION: 026 (1.00)

Select the ONE statement below that correctly describes when a Rod Block will occur when the Reactor Mode Switch is in "Refuel".

a. One rod not full in, a second rod selected

b. Refuel platform near or over reactor vessel.

c. The reactor building crane operating over the reactor vessel.

d. Refuel grapple loaded (>550 lbs) operating over the spent fuel pool.

QUESTION: 027 (1.00)

Following a failure to scram the following conditions exist:

- o No CRD pumps are operating or available.
- o CRD scram inlet and outlet valves indicate open in the control room.

Based on the above conditions, which ONE of the following methods is utilized in OP-97, Reactor Protection System, to insert control rods?

a. Manually open the scram discharge vent and drain valves.

b. Manually vent the scram air header.

c. Manually vent the CRD above piston area.

d. Hook up a portable hydro pump to supply CRD drive pressure.

QUESTION: 028 (1.00)

Following a failure to scram with CRD pumps operating which ONE of the following actions is required to manually insert (drive) control rods?

a. Pull fuses to fail closed the ARI Valves.

b. Defeat RPS interlocks and reset the Scram.

c. Install jumpers to defeat RSCS.

d. Open the CRD charging header isolation valve, 2RDS-V28.

QUESTION: 029 (1.00)

The control room has been evacuated prior to scramming the reactor or shutting the MSIVs.

In accordance with N2-OP-78, Remote Shutdown System, select the ONE statement below that correctly describes the initial required action of the SSS.

a. Proceeds to the front standard and trips the turbine after the reactor is scrammed locally.

b. Reports to the scene of the fire and assumes duties as Fire Chief.

c. Proceeds to panel 2CES-PNL417 and trips all feedpumps using the appendix "R" switches.

d. Proceeds directly from the control room to the remote shutdown panel and directs operations.

QUESTION: 030 (1.00)

Select the ONE statement below that correctly describes an automatic function that is bypassed when the Appendix "R" disconnect switches are placed in the "Actuate" position.

a. Emergency diesel generator automatic start.

b. RCIC steam inlet valve, MOV-120, high level closure.

c. Emergency diesel generator cooling water high temperature trip.

d. Automatic start of high pressure core spray.

QUESTION: 031 (1.00)

Select the ONE type of system below that would be isolated after entering N2-EOP-SC, Secondary Containment Control.

a. Systems required to shutdown the reactor.

b. Systems required for adequate core cooling.

c. Fire Suppression systems.

d. Auxiliary cooling water systems.

QUESTION: 032 (1.00)

The spent fuel pool level is 352 ft., rapidly trending downward, and normal makeup from condensate storage and transfer is unavailable to maintain level.

In accordance with N2-OP-38, Spent Fuel Pool Cooling and Cleanup, select the ONE statement below that correctly describes the action the SSS should direct to restore level.

a. Rig a hose from the fire water system.

b. Valve in service water makeup to the pool.

c. Fill the pool with either RHR system A or B.

d. Rig a hose from the demineralized water system.

QUESTION: 033 (1.00)

Select the ONE item below that must be classified in accordance with EAP-2, Classification Of Emergency Conditions.

a. Fuel pool water level is 4" below normal water level.

b. Both spent fuel cooling pumps are inoperable.

c. Spent fuel pool water temperature is 130 degrees and reactor building closed cooling water is not available to the heat exchangers.

d. Spent fuel pool cooling off-line radiation monitor is alarming.

QUESTION: 034 (1.00)

Select the ONE statement below that correctly describes the expected response of the high pressure core spray (HPCS) system following automatic initiation.

a. Depressing the HPCS high water level trip reset switch with water level less than 202.3" (level 8) will not automatically reopen the HPCS injection valve, CHS*MOV107 until the vessel level drops to 108.8" (level 2) initiation setpoint .

b. Actuating the HPCS initiation reset switch after the high drywell pressure signal which caused the initiation has cleared, will remove the initiation "seal-in" but will not return the HPCS system to a standby status.

c. The high water level trip must be reset by the operator to reopen the HPCS injection valve if level falls below 108.8" (level 2) and the drywell pressure signal is cleared.

d. Following an inadvertent automatic initiation of HPCS, if level is below 202.3" (level 8), tripping the pump is the only way to stop injection

QUESTION: 035 (1.00)

Select the ONE statement below that correctly describes the basis for the CAUTION in N2-OP-61A, Primary Containment Ventilation Purge and Nitrogen System, "DO NOT VENT, DEPRESSURIZE OR PURGE THE PRIMARY CONTAINMENT IF CONTAINMENT TEMPERATURE IS ABOVE 150 degrees F."

a. This is the maximum operating temperature for the standby gas treatment system (SBGT) filters.

b. Venting above this temperature will cause "chugging" at the downcomer vents.

c. Venting will result in excessive loss of non-condensibles which could cause containment failure, if sprays are subsequently used to lower pressure.

d. Containment sprays which are in use above this temperature, would damage the SBGT filters.

QUESTION: 036 (1.00)

Select the ONE statement below that correctly describes the expected equipment responses resulting from a high reactor vessel dome pressure (1050 psig) initiation signal, sensed by the redundant reactivity control system (RRCS).

a. Immediately causes a recirculation pump trip (RPT) to zero speed.

b. Immediately initiates an alternate rod insertion (ARI).

c. Initiates standby liquid at 25 seconds, if power is not below the APRM downscale trip point.

d. Trips all main feedwater pumps at 25 seconds, if power is not below the APRM downscale trip Point.

QUESTION: 037 (1.00)

Select the ONE condition below that requires emergency depressurization of the reactor in accordance with N2-EOP-PC, Primary Containment Control.

a. Drywell temperature is being maintained at 320 degrees F.

b. Suppression pool temperature and reactor pressure are being maintained above the Heat Capacity Temperature Limit.

c. Suppression pool water level and reactor pressure are being maintained below the Suppression Pool Load Limit

d. Suppression pool water level is being maintained above the Heat Capacity Level Limit.

QUESTION: 038 (1.00)

Select the ONE condition below that would require entry into N2-EOP-PC, Primary Containment Control.

a. Drywell temperature 135 degrees F.

b. Primary containment pressure 1.60 psig.

c. Suppression pool temperature 88 degrees F.

d. Suppression pool water level EL. 199.0 feet.

QUESTION: 039 (1.00)

While operating at 100% power a feedwater control system malfunction causes reactor water level to decrease to 157 inches. The reactor continues to operate at 100% power.

Which ONE of the following is a required immediate operator action?

a. Initiate a reactor scram.

b. Take manual control of the feedwater level control system and attempt to restore level.

c. Immediately start the third feedwater pump.

d. Shift the feedwater control system from 3 element to 1 element control and allow it to restore level automatically.

QUESTION: 040 (1.00)

Select the ONE statement below that correctly describes the reason reactor power decreases, when RPV water level is lowered to the top of active fuel following a failure to scram.

a. The natural circulation flowpath is broken causing the remaining water inside the shroud to boil and totally void the core region.

b. The driving head from the downcomer water level is reduced minimizing core flow, increasing the voids in the core region.

c. Carryunder increases, increasing the preheating of the coolant, reducing the core inlet subcooling of the coolant.

d. The mass of coolant in the reactor vessel is reduced, increasing the rate of voiding in the core region for a given heat flux.

QUESTION: 041 (1.00)

Select the ONE statement below that is correct concerning the hot shutdown boron weight in accordance with N2-EOP-C-7, Level/Power Control.

a. Calculation is valid only for an RPV water level of -14 inches (TAF).

b. Limits the amount of Boron added to prevent stratification and plateout on the hot fuel pins.

c. Is calculated to correspond to a level of 2800 gallons remaining in the SLC tank.

d. Will keep the reactor subcritical during cooldown, until conditions are met for placing shutdown cooling in service.

QUESTION: 042 (1.00)

Select the ONE statement below that correctly describes the reason recirculation flow is runback to minimum, prior to tripping the recirculation pumps during implementation of N2-EOP-RPV, RPV Control, Section RQ.

a. Prevent a possible level swell from tripping the turbine generator.

b. Prevent a possible level shrink from isolating the MSIVs.

c. Prevent a level transient which would cause automatic initiation of HPCS and RCIC.

d. Prevent a power transient which would cause fuel cladding damage.

QUESTION: 043 (1.00)

Select the ONE statement below that correctly describes the basis for the N2-EOP-RR, Radioactive Release Control entry condition; "Above The Emergency Plan Alert Level".

a. This value is the Technical Specification limit for offsite releases.

b. This is the minimum threshold for accurate detection of an offsite release.

c. It is sufficiently high that it is not expected to occur during normal operation, but sufficiently low that by itself it does not threaten the health and safety of the public.

d. By only considering the contribution from Nine Mile Point 2 it allows use of the Alert limit, rather than the a lower limit if all three units at the site were included.

QUESTION: 044 (1.00)

Select the ONE statement below that requires the operator to immediately place the reactor mode switch in SHUTDOWN following a sudden decrease in core flow, in accordance with N2-OP-101D, Power Changes.

a. Oscillations of 8% peak to peak on any APRM.

b. Operation on the Extended Load Line Limit Analysis (ELLLA) region with total core flow of 43% (47 mlb/hr).

c. Oscillations of 15% peak to peak on any LPRM, periodically exceeding its upscale or downscale alarm point.

d. Operation on the 80% Rod line with total core flow < 45% (49mlb/hr).

QUESTION: 045 (1.00)

While operating at 25% power, main condenser vacuum decreases to 22" Hg vacuum.

Which ONE of the following automatic actions will occur?

a. MSIV closure, reactor scram and turbine trip.

b. Turbine exhaust sprays automatically initiate only.

c. Turbine trip and automatic reactor scram.

d. Turbine trip only.

QUESTION: 046 (1.00)

While operating at full power, the Division I Emergency DC bus de-energizes. In accordance with OP-74A, Emergency D.C. Distribution, the operator is required to manually scram the reactor.

Which ONE of the following is the reason for this action?

a. Group 8 and 9 outboard containment isolation occurs.

b. All SRV relief functions are lost.

c. Div I RRCS lost including power to Div I ARI valves.

d. Both reactor recirc. pumps trip off.

QUESTION: 047 (1.00)

Select the ONE statement below that correctly describes the expected automatic response of the reactor recirc. pumps as a result of a main turbine trip.

a. Recirc. pumps trip to off if operating in fast, regardless of the initial reactor power.

b. Recirc. pumps trip to low speed if operating in fast, only if reactor power is initially above 30%.

c. Recirc. pumps trip to low speed if operating in fast, regardless of the initial reactor power.

d. Recirc. pumps trip to off if operating in low speed, if reactor power is initially above 30%.

QUESTION: 048 (1.00)

Select the ONE statement below that correctly describes the expected automatic response to a reactor vessel high level condition (level 8).

a. Reactor feed pumps trip.

b. RCIC turbine trip throttle valve, MOV 150 trips.

c. Reactor scram signal generated on high vessel level signal.

d. Reactor feed pumps and condensate booster pumps trip.

QUESTION: 049 (1.00)

Select the ONE statement below that correctly describes the action required to restore reactor building closed loop cooling water (RBCLCW) to the drywell coolers, following a LOCA actuation signal, with a high drywell pressure signal sealed in.

a. Jumper around and reset the PCIS group 8 isolation signal.

b. Manually open the RBCLCW containment isolation MOVs.

c. Override the LOCA signal with the drywell unit cooler Div I (II) LOCA override switches on P873 and reopen the containment isolation valves.

d. Override the LOCA signal with the drywell unit cooler fans Group 1/2 LOCA override Switches on P873, the valves will reopen when the fans are started.

QUESTION: 050 (1.00)

Which ONE of the following components has the capability to be cooled ONLY by the reactor building closed loop cooling water system?

a. Residual heat removal pump seal coolers.

b. Reactor recirculation pumps.

c. Spent fuel pool cooling heat exchangers.

d. Instrument air compressor heat exchangers.

QUESTION: 051 (1.00)

In accordance with N2-OP-13, Reactor Building Closed Loop Cooling Water, select the ONE statement below that is a required action following a complete loss of all RBCLCW main pumps while operating at full power.

a. Supply service water, to RBCLCW loads which service water can supply and commence a controlled reactor shutdown.

b. Isolate large heat loads and commence a controlled reactor shutdown.

c. Place the reactor mode switch to shutdown.

d. Isolate the drywell cooling loops, transfer the recirc. pumps to low speed, then place the reactor mode switch to shutdown.

QUESTION: 052 (1.00)

Select the ONE statement below that correctly describes the expected automatic response of the instrument and service air system to a decreasing instrument air system pressure.

a. The containment isolation valves will automatically close and isolate air to the containment, at 90 psig decreasing.

b. CRD scram air header low pressure will cause an automatic reactor scram at 65 psig decreasing.

c. The breathing air system compressor will automatically start and supply the instrument air system at 70 psig decreasing

d. The service air system supply isolation valve, 2IAS-AOV171 will close automatically at 85 psig decreasing.

QUESTION: 053 (1.00)

While operating at 100% power, a valid high steam flow signal is sensed in the "B" main steam line.

Which ONE of the following correctly describes the expected automatic response of the main steam system to this event?

a. Only the B steam line inboard and outboard MSIV will close.

b. A Group 1, containment isolation signal will result.

c. A Half Group 1, (Division II) containment isolation logic actuation will result.

d. One solenoid on each MSIV will de-energize, but no valve actuation will occur.

QUESTION: 054 (1.00)

In accordance with N2-OP-31, Residual Heat Removal System, select the ONE statement below that correctly describes the basis for raising RPV water level to 227-243 inches following a loss of shutdown cooling.

a. To aid in establishing a natural circulation flowpath.

b. To increase NPSH of the reactor recirc. pumps to allow starting one of them.

c. To increase NPSH of the reactor water cleanup pump to allow a higher system flowrate.

d. To initiate alternate shutdown cooling by starting flow through the SRVs.

QUESTION: 055 (1.00)

In accordance with N2-OP-31, Residual Heat Removal System, select the ONE statement below that correctly describes how the cooldown rate is controlled when utilizing the Alternate Shutdown Cooling flowpath, through the SRVs.

a. By throttling the RHR or LPCS injection flowrate.

b. By throttling the reactor water cleanup, non-regenerative heat exchanger cooling water flow.

c. By throttling an RHR heat exchanger bypass valve in suppression pool cooling.

d. By opening or closing SRVs as required.

QUESTION: 056 (1.00)

While operating at full power, both CRD pumps are lost.

In accordance with N2-OP-30, Control Rod Drive, which ONE of the following correctly describes when the operator is required to place the mode switch to shutdown?

a. After 20 minutes, if unable to restart a CRD pump.

b. When any control rod starts drifting in.

c. When more than one control rod high temperature alarm is received.

d. When more than one CRD accumulator fault alarm is received.

QUESTION: 057 (1.00)

Select the ONE statement that correctly describes the basis for tripping the reactor recirculation pumps and the drywell cooling fans, prior to initiating drywell sprays.

a. Prevent exceeding the relief capacity of the drywell vacuum breakers.

b. Reduce the heat input to the drywell.

c. Prevent electrical damage to their motors.

d. Prevent excessive vibration that could damage piping system welds.

QUESTION: 058 (1.00)

Select the ONE statement below that correctly describes the basis for the suppression pool level normal upper limit value of 201 ft.

a. This level ensures HPCS suction does not transfer to the suppression pool during normal operation.

b. This level will be in the "BAD" area of the Suppression Pool Load Limit Curve on N2-EOP-PC, Primary Containment Control.

c. This level will be in the "BAD" area of the Pressure Suppression Pressure curve of N2-EOP-PC, Primary Containment Control

d. This level ensures that the primary containment design pressure will not be exceeded during blowdown from full operating pressure.

QUESTION: 059 (1.00)

EPP-3, Search And Rescue, provides Emergency Exposure guidance for planned actions.

Select the ONE statement below that provides the Emergency Exposure guidance utilized when mitigating the cause of a high secondary containment radiation level.

a. 25 rem whole body exposure.

b. 50 rem whole body exposure.

c. 75 rem whole body exposure.

d. 100 rem whole body exposure, provided the individual is a volunteer and over 45 years of age.

QUESTION: 060 (1.00)

Select the ONE statement below that will result in an automatic initiation of the standby gas treatment system.

a. The reactor building differential pressure is -.20 in WG.

b. The reactor building Division II, below refuel floor exhaust ventilation air flow is 2000 cfm.

c. The reactor building Division II, above refuel floor ventilation radiation monitor is alarming at the alert level.

d. The refuel floor area radiation monitor (ARM) is alarming at the high radiation level.

QUESTION: 061 (1.00)

Select the ONE statement below that correctly describes the method used to verify that a control rod is coupled to its drive assembly.

a. By verifying the control rod full out indicating light is received at position 48.

b. By verifying "stall flow" is less then 2 gpm when attempting to pull the rod past position 48.

c. By verifying a rod drift alarm is NOT received when attempting to pull the rod past position 48.

d. By verifying the Control Rod Overtravel Annunciator is NOT received when attempting to pull the rod past position 48.

QUESTION: 062 (1.00)

In accordance with N2-OP-38, Spent Fuel Pool Cooling And Cleanup System, which ONE of the following conditions must be met prior to using the RHR system for spent fuel pool supplemental cooling?

a. The low pressure core spray system must be verified operable.

b. Permission of the Operations Superintendent.

c. All fuel must be removed from the reactor vessel.

d. Spent fuel pool cooling system filters must be available to maintain water quality.

QUESTION: 063 (1.00)

Select the ONE statement below that correctly describes the power supply(ies) to the MSIV solenoids.

a. ~~RPS buses A&B.~~ UPS buses 3A + 3B

b. UPS buses 1A&1B.

c. Bus 2BYS*SWG0002A

d. Bus 2BYS*SWG0002B.

QUESTION: 064 (1.00)

Select the ONE statement below that correctly describes the normal suction supply to the CRD pumps.

a. Directly from the condensate storage tank.

b. Directly from the main condenser hotwell

c. Condensate storage and transfer pump discharge.

d. Condensate demineralizer effluent line.

QUESTION: 065 (1.00)

Select the ONE statement below which correctly describes the effect that throttling closed PV-101, CRD drive/cooling pressure control valve, would have on control rod speeds.

a. Increases rod scram speed.

b. Decreases rod scram speed

c. Increases rod insert and withdraw speeds.

d. Decreases rod insert and withdraw speeds.

QUESTION: 066 (1.00)

Select the ONE statement below that correctly describes the end-of cycle recirculation pump trip (EOC-RPT).

a. Required, because on a pressure transient voids can add positive reactivity faster than rods can add negative reactivity.

b. Actuates on a low reactor water level 3 signal to backup the low level scram signal.

c. Actuates on a high reactor pressure signal of 1050 psig to backup the high pressure scram signal.

d. Is only required to be operational during coast down periods when all control rods are full out.

QUESTION: 067 (1.00)

In accordance with N2-OP-37, Reactor Water Cleanup System, select the ONE statement below that correctly describes the reason RWCU reject flow must be throttled to 170-200 gpm following a reactor scram.

a. Prevent exceeding "runout" flow of the RWCU pumps.

b. Prevent cavitation from occurring at the outlet of the non-regenerative heat exchanger.

c. Prevent flashing in the line going to the rad waste holding tank.

d. Prevent isolating the RWCU system on high temperature.

QUESTION: 068 (1.00)

Select the ONE statement below that correctly describes the signal that automatically activates the rod block monitor.

a. Main turbine first stage pressure equivalent to 30% power.

b. Feed flow/steam flow equivalent to 30% power.

c. Average APRM power of 30%.

d. Reference APRM power of 30%.

QUESTION: 069 (1.00)

During a reactor startup with all IRMs on range 5, IRM channel A detector inadvertently withdraws.

Select the ONE statement below that correctly describes the first automatic action which would occur.

a. IRM channel A downscale trip, rod block would be received.

b. IRM channel A Upscale/Inop, RPS channel A half scram.

c. IRM channel A rod block, detector not fully in signal sent to the RXMC.

d. IRM channel A downscale trip, RPS channel A half scram.

QUESTION: 070 (1.00)

Select the ONE statement below that correctly describes how the RHR Pump B discharge piping is protected from overpressure, following an automatic initiation of RHR.

a. Testable check valve AOV-16B in the discharge line, prevents backflow through the open injection valve MOV-24B.

b. Injection valve MOV-24B, opens when the differential pressure across the valve is less then 130 psid.

c. Injection valve MOV-24B opens when reactor pressure decreases below 130 psig.

d. RHR Pump B minimum flow valve opens when flow is less then 1400 gpm to provide overpressure protection.

QUESTION: 071 (1.00)

Select the ONE statement below that correctly describes the Rod Sequence Control System (RSCS) operation.

a. The RSCS automatically bypasses at the Low Power Set Point (LPSP) of 20%, sensed by total steam flow.

b. From 75% rod density to the LPSP the RSCS enforces notch rod movement between positions 00 and 12.

c. The Rod Bypass File houses 3 bypass switch cards to allow bypassing up to 3 faulty rod position inputs to the rod pattern controller.

d. On a reactor shutdown the RSCS will automatically re-initialize at the Low Power Alarm Point (35%) and start enforcing controls.

QUESTION: 072 (1.00)

Select the ONE statement below that correctly describes a condition for which the Rod Worth Minimizer (RWM) will always enforce a rod block.

a. When two insert errors are displayed on the RWM operators panel.

b. If any rod is at any position other than 00 and the Rod Test pushbutton is depressed.

c. When one withdraw error is displayed on the RWM operators panel.

d. When any control rod which is not contained in the indicated latched rod group is selected.

QUESTION: 073 (1.00)

Select the ONE plant parameter below that will PREVENT a reactor recirc. pump from making a fast speed start from zero speed.

a. Reactor vessel water level, 179 inches.

b. Pump suction/steam dome delta T, 11.0 degrees F.

c. Feedwater flow, 25% (3.5 mlbm/hr)

d. Reactor pressure, 970 psig.

QUESTION: 074 (1.00)

During operation at 100% power, the output voltage of the Division I safety related battery charger, 2BYS*CHGR2A1 fails to zero.

Select the ONE statement below that correctly describes the effect this would have on the Division I safety related 125 VDC bus.

a. The alternate battery charger, 2BYS*CHGR2A2 would automatically assume the load and maintain battery voltage.

b. The normal 125 VDC battery charger, 2BYS-CHGR-1A1 could be manually tied to the vital battery.

c. The 600 VAC power supply to the preferred battery charger from 2LAC*PNL100A, will automatically transfer to the alternate battery charger.

d. The alternate battery charger 2BYS*CHGR2A2 could be manually tied to the vital battery.

QUESTION: 075 (1.00)

Select the ONE statement below that correctly describes the indication on the 4-rod display, for a rod in the selected group that has drifted from position 48 to 47.

a. Dashes in the display.

b. Double X in the display.

c. Blinking even numbers in the display.

d. Blank windows in the display.

QUESTION: 076 (1.00)

Select the ONE statement below that correctly describes the main steam line radiation monitoring system.

a. Either a downscale or an inoperative trip on any channel, will result in an RPS half scram signal.

b. There are four detectors on each steam line, located downstream of the outboard MSIVs.

c. Because of the fast response required the system utilizes Geiger-Mueller (GM) detectors.

d. The system provides channel trip signals to the reactor protection and containment isolation systems.

QUESTION: 077 (1.00)

Select the ONE statement below that would cause the control room ventilation system, special filter train booster fans to start.

a. High-High radiation detected in the outside air supply.

b. Negative pressure sensed in the control room.

c. Smoke detector in the system supply line alarming.

d. High temperature sensed in the special filter train charcoal absorber.

QUESTION: 078 (1.00)

Select the ONE statement below that correctly describes the primary source of NPSH to the reactor recirc. pumps, when operating in low speed.

a. Subcooling effect from the incoming feedwater.

b. Height of water in the reactor vessel.

c. Flow control valve throttle position.

d. Subcooled drains from the steam separator.

QUESTION: 079 (1.00)

Select the ONE statement below that correctly describes a mode of residual heat removal (RHR) that can be operated from the remote shutdown panel.

a. Suppression pool spray.

b. Drywell spray.

c. LPCI injection inside the shroud.

d. Suppression pool cooling.

QUESTION: 080 (1.00)

Select the ONE statement below that correctly describes the function of the 145 psig permissive pressure signal sensed at the discharge of the low pressure core spray pump (LPCS).

a. Opens the minimum flow valve, MOV-107.

b. Opens the injection valve, MOV-104.

c. Permissive signal to automatic depressurization system.

d. Input to the LPCS/LPCI A injection nozzle leakage detection system.

QUESTION: 081 (1.00)

Select the ONE statement below that correctly describes how failure of the LPCS/RHR A, water leg pump would be indicated in the control room.

a. LPCS High Point Vent Level Low annunciator.

b. LPCS/RHR A water leg pump discharge pressure indicating 75 psig.

c. LPCS pump suction pressure greater than discharge pressure.

d. LPCS Pump Suction Pressure Abnormal annunciator.

QUESTION: 082 (1.00)

An inadvertent initiation of the High Pressure Core Spray System occurs at 100% power.

After the initial transient has subsided, which of the following is the correct reactor response when compared to 100% power?

a. An increase in reactor pressure and a small increase in reactor power.

b. An increase in reactor pressure and a small decrease in reactor power.

c. A decrease in reactor pressure and a small increase in reactor power.

d. A decrease in reactor pressure and a small decrease in reactor power.

QUESTION: 083 (1.00)

Select the ONE statement below that correctly describes the operation of the backup scram valves.

a. Normally energized and will de-energize, one valve with each RPS channel de-energizing.

b. Aligned with two valves in series, one powered from each RPS trip channel, both valves must actuate to vent the scram air header.

c. Require both RPS channels de-energized or one RPS channel and one ARI logic channel de-energized for both valves to actuate.

d. Aligned with two valves in series, a check valve allows venting the pilot air header if the B valve fails to actuate.

QUESTION: 084 (1.00)

Following a valid reactor core isolation cooling system (RCIC) initiation signal the steam admission bypass valve, MOV-159 failed to open.

Which ONE of the following correctly describes the expected response of the RCIC steam admission valve, MOV-120?

a. Will not open.

b. Opens immediately.

c. Opens 5 seconds after the initiation signal.

d. Opens 10 seconds after the initiation signal.

QUESTION: 085 (1.00)

Following an automatic initiation of the reactor core isolation cooling system (RCIC), reactor vessel level is 187 inches and slowly increasing.

Which ONE of the following correctly describes the response of the RCIC system if the RCIC manual isolation pushbutton is depressed?

a. Steam supply outboard isolation valve, MOV-121 closes causing a RCIC turbine trip due to the isolation signal.

b. Steam supply inboard isolation valve, MOV-128 closes but will reopen due to the initiation signal.

c. The manual isolation pushbutton has no effect on RCIC due to the automatic initiation signal present.

d. Steam supply inboard isolation valve, MOV 128 closes and after the isolation delay timer times out, the steam supply outboard isolation valve, MOV-121 closes.

QUESTION: 086 (1.00)

Select the ONE statement below that correctly describes the response of the safety relief valves when operated from the Remote Shutdown Panel (RSP), in the Appendix R mode.

a. The valves will function automatically in the relief and ADS modes.

b. The valves will only function automatically in the ADS mode.

c. The valves will only function automatically in the relief mode.

d. The valves will function by manually operating them from the RSP.

QUESTION: 087 (1.00)

The Primary Containment Hydrogen and Oxygen Analyzer automatically isolated due to a valid Group 8 isolation signal.

Which ONE of the following is the initiating signal that caused the isolation?

a. Reactor water level, 159.3 inches decreasing.

b. Main steam line flow, 140%

c. Drywell pressure, 1.68 psig increasing.

d. Main steam line radiation monitor, 3X normal power background.

QUESTION: 088 (1.00)

The Division II emergency diesel generator has auto started on a loss of offsite power concurrent with a LOCA signal. (LOCA/LOOP)

Based on these conditions, which ONE of the following set of signals will automatically trip the generator output breaker?

a. Engine overspeed or generator overcurrent.

b. Engine overspeed or generator differential current lockout.

c. Generator reverse power or generator overcurrent.

d. Generator reverse power or generator differential current lockout.

QUESTION: 089 (1.00)

Select the ONE statement below that correctly describes what will cause the APRM flow units 10% mismatch trip.

a. One recirc loop flow differs from the other recirc loop flow by more than 10%.

b. One recirc loop flow differs from the average recirc loop flow by more than 10%.

c. Total recirc flow is 10% above the flow biased APRM trip setpoint.

d. Total recirc flow measured by one flow unit differs from that of an associated flow unit by more than 10%.

QUESTION: 090 (1.00)

Select the ONE statement below that correctly describes the expected plant response, if a safety valve starts to leak during full power operation.

a. A decrease in indicated core flow due to a decrease in delta-p across the reactor core.

b. An increase in indicated core flow due to a decrease in delta-p across the reactor core.

c. A decreased steam flow signal sent to the feedwater control system due to an increase in steam flow through the relief valve.

d. An increased steam pressure signal sent to the electro hydraulic control (EHC) system to compensate for the decrease in steam line pressure.

QUESTION: 091 (1.00)

A LOCA has occurred concurrently with a loss of offsite power (LOCA/LOOP), the emergency buses have been automatically re-energized by the emergency diesel generators.

Which ONE of the following will NOT automatically restart?

a. Residual heat removal pump.

b. Low pressure core spray pump.

c. CRD pump.

d. Service water pump.

QUESTION: 092 (1.00)

Select the ONE statement below that would cause the indicated reactor vessel narrow range level instruments to read lower than actual reactor vessel level.

a. Elevated drywell temperature.

b. Reference leg rupture.

c. Reactor vessel depressurization accompanied by high drywell temperature.

d. Variable leg rupture.

QUESTION: 093 (1.00)

Select the ONE statement below that provides the signal for the turbine control valve (TCV) fast closure scram.

a. TCV position limit switches.

b. Rate of TCV position change.

c. Power to the TCV fast-acting solenoids.

d. ETS oil pressure at the TCV.

QUESTION: 094 (1.00)

Select the ONE statement below that correctly describes the residual heat removal (RHR) pump starting sequence, after receipt of a LOCA signal with offsite power available.

a. A and B RHR pumps start immediately and the C pump starts after a 5 second time delay.

b. A and B RHR pumps start immediately and the C pump starts after a 10 second time delay.

c. A and B RHR pumps start after a 5 second time delay and the C pump starts after a 10 second time delay.

d. A and B RHR pumps start after a 10 second time delay and the C pump starts after a 15 second time delay.

QUESTION: 095 (1.00)

An automatic reactor scram has occurred. An operator action required by N2-OP-101C, Plant Shutdown, is to place the reactor mode switch in the SHUTDOWN position.

Which ONE of the following is the basis for this immediate operator action?

a. The one rod out interlock is generated.

b. The main steam low pressure, Group I isolation signal is bypassed.

c. The MSIV isolation on low reactor water level is bypassed.

d. The Group II isolation signal is bypassed.

QUESTION: 096 (1.00)

The following conditions exist for NMP2:

- ADS	Automatically Initiated after 105 second timer timed out.
- Drywell Pressure	6 psig and stable.
- Reactor water level	16 inches and slowly increasing.
- Low Pressure Core Spray and Residual Heat Removal Pumps.	All pumps are running.

Which ONE of the following actions will result in automatically closing the Automatic Depressurization System (ADS) valves?

a. Securing all Residual Heat Removal pumps.

b. Depressing the ADS A and B Logic Seal In Reset Pushbuttons.

c. Repositioning the Initiation Inhibit Switches.

d. Securing all low pressure ECCS pumps (LPCS and RHR).

QUESTION: 097 (1.00)

The following plant conditions exist:

- Reactor Power 45%.
- Total Recirculation Flow 35%.
- Two Recirculation Loop Operation.

If reactor power is increased to 70% with control rod manipulation, which ONE of the following automatic actions would occur? ASSUME the reactor recirc. flow control valve position, remains constant.

a. Rod block only.

b. Rod Block and Flow Biased Trip Scram.

c. Rod Block and Neutron Trip Scram.

d. No automatic action.

QUESTION: 098 (1.00)

Select the ONE statement below that will NOT directly input to the reactor recirculation flow control valve, motion inhibit interlock.

a. Hydraulic power unit failure.

b. Control circuit failure.

c. Level 2 vessel water level.

d. High drywell pressure.

QUESTION: 099 (1.00)

While performing a full flow surveillance test of the RCIC system, condensate storage tank (CST) to CST, a fault in the CST level detection system causes a CST level below the RCIC suction valve swap over setpoint of 6.15 feet to be sensed.

Which ONE of the following correctly describes the expected response of the CST and suppression pool suction valves for the RCIC system.?

a. The suppression pool suction valve can be opened manually with the handswitch at any time.

b. The suppression pool suction valve will open automatically when CST level is sensed below 6.15 feet.

c. The suppression pool suction valve will not open manually or automatically as long as the CST test return valves are open.

d. The CST suction valve will automatically close when CST level is sensed below 6.15 feet.

QUESTION: 100 (1.00)

The Division I standby diesel generator (SDG) is running in parallel with offsite power for periodic testing, when a loss of offsite power occurs.

Which ONE of the following correctly describes the expected response of the SDG to this event?

a. The offsite feeder breakers will trip open on reverse overcurrent and the SDG will continue to supply its bus.

b. The offsite feeder breakers and the SDG output breaker will trip open, the SDG breaker will then reclose and loads will sequence onto the emergency bus.

c. The offsite feeder breakers and the SDG output breakers will trip open, the SDG output breaker will have to be closed manually by the operator.

d. The offsite feeder breaker and SDG output breaker will remain closed, the SDG will attempt to supply offsite power before tripping on overcurrent.

(********** END OF EXAMINATION **********)

ANSWER: 001 (1.00)

b.

REFERENCE:

AP-4.2 Sect. 6.2 02-LOT006-343-2-06-0, EO-7.0&EO-8.0
[3.7/3.7]
294001K101 ..(KA's)

ANSWER: 002 (1.00)

c.

REFERENCE:

AP-4.2 Sect. 4.0. N2-ODI-5.06 page 18. 02-LOT-006-343-2-06-0,
EO-1.0a&10.0
[3.9/4.5]
294001K102 ..(KA's)

ANSWER: 003 (1.00)

d.

REFERENCE:

AP-3.3 Sect. 6.5.1 02-LOT-006-343-2-10, TO-1.0
[3.3/3.8]
294001K103 ..(KA's)

ANSWER: 004 (1.00)

b.

REFERENCE:

AP-3.1 Sect. 6.3
[3.2/3.7]
294001K105 ..(KA's)

ANSWER: 005 (1.00)

c.

REFERENCE:

N2-ODI-5.11 Sections 3.2&3.3
[3.3/3.6]
294001K107 ..(KA's)

ANSWER: 006 (1.00)

a.

REFERENCE:

AP-3.3.1 Sect. 6.4 02-LOT-343-2-10, EO-5
[3.3/3.6]
294001K104 ..(KA's)

ANSWER: 007 (1.00)

a.

REFERENCE:

Station General Order 88-6, page 9
[3.1/3.4]
294001K108 ..(KA's)

ANSWER: 008 (1.00)

d.

REFERENCE:

Tech. Specs. Sect. 6.2.2.
[3.5/3.8]
294001K116 ..(KA's)

ANSWER: 009 (1.00)

a.

REFERENCE:

N2-ODI-1.06, Sect. 3.2
[3.1/3.2]
294001A104 ..(KA's)

ANSWER: 010 (1.00)

d.

REFERENCE:

N2-ODI-1.06, Sect. 5.0 02-LOT-006-343-2-05, EO-8.0&9.0
[3.4/3.8]
294001A105 ..(KA's)

ANSWER: 011 (1.00)

d.

REFERENCE:

N2-ODI-1.09, Page 4 02-LOT-006-343-2-05 EO-8.0&9.0
[4.2/4.2]
294001A102 ..(KA's)

ANSWER: 012 (1.00)

b.

REFERENCE:

Tech. Specs. Section 6.2.2. AP-4.0 page 16, section 5.4.4.
02-LOT-006-343-2-05 page 20.
[2.7/3.7]
294001A103 ..(KA's)

ANSWER: 013 (1.00)

d.

REFERENCE:

02-LOT-006-343-2-05, EO-14 AP-4.0 pages 24-27.
[3.4/3.6]
294001A106 ..(KA's)

ANSWER: 014 (1.00)

a.

REFERENCE:

02-LOT-006-343-2-05 EO-2 AP-4.0 page 18.
294001A102
294001A102 ..(KA's)

ANSWER: 015 (1.00)

c.

REFERENCE:

02-LOT-006-343-2-05 Page 26, EO-10.0 AP-4.0 page 20.
[4.5/4.3]
294001A113 ..(KA's)

ANSWER: 016 (1.00)

c.

REFERENCE:

02-LOT-006-343-2-11 Page 10, EO-3 AP-3.2.2. pages 7&8.
[3.3/3.8]
294001K103 ..(KA's)

ANSWER: 017 (1.00)

d.

REFERENCE:

02-LOT-006-343-2-07 Page 18, EO-8. AP-6.1 page 12.
[3.9/4.5]
294001K102 ..(KA's)

ANSWER: 018 (1.00)

b.

REFERENCE:

N2-OLT-67 Page 5 L.O. 67-5
[4.4/4.4]
295003A103 ..(KA's)

ANSWER: 019 (1.00)

a.

REFERENCE:

N2-OLT-67 Page 2, L.O. 67-6.
[3.3/3.5]
295003K301 ..(KA's)

ANSWER: 020 (1.00)

c.

REFERENCE:

RPV Control N2-EOP-RPV L.O. EO-3
[3.7/3.9]
295006K101 ..(KA's)

ANSWER: 021 (1.00)

a.

REFERENCE:

N2-OLT-15, Page 10, L>O> 15-6. N2-OLT-21 page 23.
[2.9/3.1]
295007K205 ..(KA's)

ANSWER: 022 (1.00)

c.

REFERENCE:

N2-OLT-10, Pages 7 & 8. E.O. 10-4
[2.7/2.7]
295009A104 ..(KA's)

ANSWER: 023 (1.00)

d.

REFERENCE:

N2-LOT-001-216-2-01, Page 25. E.O. 5.8. N2-EOP-RPV Section RL.
[3.9/4.0]
295009K201 ..(KA's)

ANSWER: 024 (1.00)

a.

REFERENCE:

N2-EOP-RPV. N2-OLP-RL, L.O. EO-2.
[4.3/4.5]
295009G011 ..(KA's)

ANSWER: 025 (1.00)

d.

REFERENCE:

N2-EOP-PC. N2-OLP-SPT, L.O. EO-3.
[3.6/3.8]
295013K302 ..(KA's)

ANSWER: 026 (1.00)

a.

REFERENCE:

N2-OLP-2 Page 21, L.O. 2-7.
[3.7/4.0]
295014K103 ..(KA's)

ANSWER: 027 (1.00)

c.

REFERENCE:

N2-OLP-RQ, L.O. EO-3. N2-OP -97 Section H 2.
[3.3/3.4]
295015K207 ..(KA's)

ANSWER: 028 (1.00)

c.

REFERENCE:

N2-OP-97 Section H 2. N2-LOT-RQ, L.O. EO-3.
[3.4/3.7]
295015K301 ..(KA's)

ANSWER: 029 (1.00)

a.

REFERENCE:

N2-OP-78 Section 2.2. N2-LOT-36, L.O. 36-9
[4.1/4.1]
295016G006 ..(KA's)

ANSWER: 030 (1.00)

b.

REFERENCE:

N2-OP-78 Precaution 6.0. N2-LOT-36 L.O. 36-6.
[4.4/4.5]
295016K201 ..(KA's)

ANSWER: 031 (1.00)

d.

REFERENCE:

N2-EOP-SC. N2-LOT-RR, EO-3
[3.6/3.9]
295017K301 ..(KA's)

ANSWER: 032 (1.00)

b.

REFERENCE:

N2-OP-38, Precaution 2.0 & Section H. 1.0. N2-LOT-1 L.O. 1.6 & 1.7
[3.4/3.7]
295023A202 ..(KA's)

ANSWER: 033 (1.00)

a.

REFERENCE:

EAP-2 Page 9. N2-LOT-1, L.O. 1-7.
[3.0/4.5]
295023G002 ..(KA's)

ANSWER: 034 (1.00)

b.

REFERENCE:

N2-OP-33-2 Page 2. N2-OLT-12 E.O. 12-4.
[3.7/3.7]
295024K202 ..(KA's)

ANSWER: 035 (1.00)

c.

REFERENCE:

N2-OLP-PCP EO-3. N2-OP-61A Caution Page 25.
[3.5/4.0]
295024K307 ..(KA's)

ANSWER: 036 (1.00)

b.

REFERENCE:

N2-OP-36B. N2-OLT-33 L.O. 33-4.
[3.9/4.1]
295025K204 ..(KA's)

ANSWER: 037 (1.00)

b.

REFERENCE:

N2-EOP-PC. N2-OLP-SPT E.O. EO-3
[3.8/4.1]
295026K301 ..(KA's)

ANSWER: 038 (1.00)

d.

REFERENCE:

N2-EOP-PC N2-OLP-SPL page 5, L.O. EO-2.
[4.3/4.5]
295030G011 ..(KA's)

ANSWER: 039 (1.00)

a.

REFERENCE:

N-2-EOP-RPV. N2-OLP-RL L.O. EO-1.
[4.0/3.8]
295031G010 ..(KA's)

ANSWER: 040 (1.00)

b.

REFERENCE:

N2-OLP-C7 page 8 L.O. EO-3.
[3.7/4.1]
295031K103 ..(KA's)

ANSWER: 041 (1.00)

c.

REFERENCE:

N2-EOP-C7. N2-OLP-C7 pages 16-18, L.O. EO-3
[4.3/4.4]
295037A203 ..(KA's)

ANSWER: 042 (1.00)

a.

REFERENCE:

N2-OLP-RQ Page 9, L.O. EO-3
[4.1/4.2]
295037K301 ..(KA's)

ANSWER: 043 (1.00)

c.

REFERENCE:

N2-OLP-RR, page 4, L.O. EO-3. S-EAP-2, page 38.
[3.6/4.5]
295038K301 ..(KA's)

ANSWER: 044 (1.00)

b.

REFERENCE:

N2-OP-101D page 11.
[3.5/3.8]
295001A201 ..(KA's)

ANSWER: 045 (1.00)

d.

REFERENCE:

N2-Op-9 Section H. 2.0. N2-OLT-35 L.O. EO-35-5.
[3.1/3.2]
295002K202 ..(KA's)

ANSWER: 046 (1.00)

d.

REFERENCE:

N2-OP-74A Section H. 5.2. N2-OP-101D Section H. 2.1.
[3.1/3.5]
295004K303 ..(KA's)

ANSWER: 047 (1.00)

b. (no change)

REFERENCE:

N2-OLT-8 L.O., EO-8.12. T.S. Bases 3.3.4.
[3.2/3.3]
295005K203 ..(KA's)

ANSWER: 048 (1.00)

a.

REFERENCE:

N2-OLT-05, EO-5.3c
[3.5/3.5]
295008A108 ..(KA's)

ANSWER: 049 (1.00)

c.

REFERENCE:

N2-OP-13 Step H.2.0. N2-OLT-20, L.O. EO-20-5.
[3.8/3.8]
295012A102 ..(KA's)

ANSWER: 050 (1.00)

d.

REFERENCE:

N2-OLT-58 L.O. EO-58.8.
[3.3/3.4]
295018A101 ..(KA's)

ANSWER: 051 (1.00)

c.

REFERENCE:

N2-OP-13 Section H.1.2. N2-OLT-58 L.O. EO-58-5.
[3.4/3.6]
295018K202 ..(KA's)

ANSWER: 052 (1.00)

d.

REFERENCE:

N2-OP-19 Section H.2.1. N2-OLT-60 L.O. EO-60-4.
[3.3/3.2]
295019A104 ..(KA's)

ANSWER: 053 (1.00)

b.

REFERENCE:

N2-OLT-21 page 19 Note 4, L.O. EO-21-4.
[3.4/3.8]
295020A206 ..(KA's)

ANSWER: 054 (1.00)

a.

REFERENCE:

N2-OP-31, section H.10.0 page 49. N2-LOT-15 L.O. EO-15.9
[3.6/3.7]
295021K104 ..(KA's)

ANSWER: 055 (1.00)

a.

REFERENCE:

N2-OP-31 section H.10.39. N2-LOT-15 L.O. EO-15-9.
[3.7/3.7]
295021A104 ..(KA's)

ANSWER: 056 (1.00)

d.

REFERENCE:

N2-OP-30, page 20 Section H.1.0. N2-OLT-7 L.O. EO7-6.
[3.3/3.4]
295022K101 ..(KA's)

ANSWER: 057 (1.00)

c.

REFERENCE:

N2-OLP-DWT page EO-3.
[3.6/3.9]
295028K303 ..(KA's)

ANSWER: 058 (1.00)

d.

REFERENCE:

Tech Spec Bases 3/4.6.2. N2-OLB-SPL, EO-1&3. N2-EOP-PC Section SPL.
[3.6/3.9]
295029G007 ..(KA's)

ANSWER: 059 (1.00)

a.

REFERENCE:

N2-OLP-EPP15 page 5 L.O. EPP15-2
[3.9/4.2]
295033K102 ..(KA's)

ANSWER: 060 (1.00)

b.

REFERENCE:

N2-LOT-24 L.O. EO24-5. N2-OP-79 page 37 Section I-15.
[4.3./4.5]
295034K203 ..(KA's)

ANSWER: 061 (1.00)

d.

REFERENCE:

N2-OP-101A step E.2.8 page 7. N2-OLT-06 L.O 06-4
[3.8/3.9]
201003K402 ..(KA's)

ANSWER: 062 (1.00)

c.

REFERENCE:

N2-OP-38 step H3.0, page 17. N2-OLT-1 L.O. 1-6.
[2.7/2.9]
233000K407 ..(KA's)

ANSWER: 063 (1.00)

a.

REFERENCE:

N2-OLT-38 page 14 L.O.38-5.
[3.2/3.3]
239001K201 ..(KA's)

ANSWER: 064 (1.00)

d.

REFERENCE:

N2-OLT-49 L.O. 49-4 N2-OLT-7 Page 1.
[3.1/3.1]
256000K105 ..(KA's)

ANSWER: 065 (1.00)

c.

REFERENCE:

N2-OLT-7 L.O.7-3. N2-OP-30 page 3.
[3.1/3.0]
201001K408 ..(KA's)

ANSWER: 066 (1.00)

a.

REFERENCE:

N2-OLT-8 page 8, L.O. 8.11. Tech Specs bases 3/4.3.4.
[3.5/3.6]
202001K505 ..(KA's)

ANSWER: 067 (1.00)

d.

REFERENCE:

N2-OP-37 page 2. N2-LOT-L.O. 10-4.
[3.2/3.2]
204000A214 ..(KA's)

ANSWER: 068 (1.00)

d.

REFERENCE:

N2-LOT-32 page 5, L.O.32-3.
[2.9/3.0]
215002K403 ..(KA's)

ANSWER: 069 (1.00)

c.

REFERENCE:

N2-OLT-27 page 9, L.O. 27-6.
[3.0/3.1]
215003K503 ..(KA's)

ANSWER: 070 (1.00)

b.

REFERENCE:

N2-LOT-15 pages 4, 5&12, L.O. 15-8e.
[3.3/3.4]
219000K404 ..(KA's)

ANSWER: 071 (1.00)

b.

REFERENCE:

N2-OLT-31 page 14 L.O. 31-5.
[3.3/3.3]
201004A101 ..(KA's)

ANSWER: 072 (1.00)

c.

REFERENCE:

N2-OLT-31 page 26, L.O.31-5.
[3.4/3.5]
201006G007 ..(KA's)

ANSWER: 073 (1.00)

c.

REFERENCE:

N2-OLT-8 page 12, L.O. 8.13.
[3.5/3.5]
259001K411 ..(KA's)

ANSWER: 074 (1.00)

d.

REFERENCE:

N2-OLT-68 page 3, L.O. 68-4.
[3.1/3.4]
263000K401 ..(KA's)

ANSWER: 075 (1.00)

a.

REFERENCE:

N2-OP-96 page 10. N2-OLT-31 L.O.31-2
[3.8/3.8]
214000A402 ..(KA's)

ANSWER: 076 (1.00)

d.

REFERENCE:

N2-OLT-62, page 7, L.O. 62-3,4&5.
[3.6/3.8]
272000K101 ..(KA's)

ANSWER: 077 (1.00)

a.

REFERENCE:

N2-OLT-70 pages 6&7, L.O. 70-1&3.
[3.3/3.5]
290003A301 ..(KA's)

ANSWER: 078 (1.00)

b.

REFERENCE:

N2-OLT-8 page 3, L.O. 8.3.
[3.1/3.1]
202002K406 ..(KA's)

ANSWER: 079 (1.00)

d.

REFERENCE:

N2-LOT-36 page 3, L.O. 36-4.
[3.6/3.7]
203000K414 ..(KA's)

ANSWER: 080 (1.00)

c.

REFERENCE:

N2-LOT-14, page 4 L.O. 14-6&14-8.
[3.6/3.7]
209001G007 ..(KA's)

ANSWER: 081 (1.00)

a.

REFERENCE:

N2-LOT-14 pages 4&5 L.O. 14-3. N2-OP-32 page 40.
[3.0/3.2]
209001K402 ..(KA's)

ANSWER: 082 (1.00)

d.

REFERENCE:

NMP2: N2-OLT-12 page 9, L.O. 12-6
[3.9/3.9]***

209002K303 ..(KA's)

ANSWER: 083 (1.00)

d.

REFERENCE:

N2-OLT-35 page 6
[4.0/4.1]***

212000K306 ..(KA's)

ANSWER: 084 (1.00)

d.

REFERENCE:

N2-OLT-16 page 12 L.O. 16-4.
[3.5/3.5]***
217000A301 ..(KA's)

ANSWER: 085 (1.00)

a.

REFERENCE:

N2-OLT-16 page 15, L.O. 16-5.
[3.8/3.7]***
217000G007 ..(KA's)

ANSWER: 086 (1.00)

d.

REFERENCE:

N2-LOT-36 page 6 L.O. 36-5&6.
[3.8/3.9]***
218000K105 ..(KA's)

ANSWER: 087 (1.00)

c.

REFERENCE:

N2-OLT-21 page 26, L.O. 21-4a&b.
[3.7/3.7]***
223002A102 ..(KA's)

ANSWER: 088 (1.00)

b.

REFERENCE:

N2-OLT-1187 page 15, L.O. 18-3b.
[4.0/4.2]***
264000K402 ..(KA's)

ANSWER: 089 (1.00)

d.

REFERENCE:

N2-OLT-29 page 4 L.O. 29-2&3.
[3.3/3.4]***
215005K116 ..(KA's)

ANSWER: 090 (1.00)

c.

REFERENCE:

N2-OLT-38 page 3 L.O.38-2c.
[3.1/3.3]***
239002A109 ..(KA's)

ANSWER: 091 (1.00)

c.

REFERENCE:

N2-OLT-67 page 2 L.O. 67-6a&b.
[3.6/3.9]***
262001K602 ..(KA's)

ANSWER: 092 (1.00)

d.

REFERENCE:

N2-OLP-05 page 17, L.O. 5-8.
[3.6/3.8]***
216000A203 ..(KA's)

ANSWER: 093 (1.00)

d.

REFERENCE:

N2-OLT-44 page 3 L.O.44-5f.
[3.7/3.8]***
241000K405 ..(KA's)

ANSWER: 094 (1.00)

c.

REFERENCE:

N2-OLT-15 page 12 L.O. 15-7a
[4.0/3.9]***
203000A302 ..(KA's)

ANSWER: 095 (1.00)

b.

REFERENCE:

N2-OLT-21 page 6 L.O. 21-4c.
[3.2/3.6]***
223002K404 ..(KA's)

ANSWER: 096 (1.00)

b.

REFERENCE:

N2-OLT-13 page 6, L.O. 13-6.
[3.8/3.8]***
218000K501 ..(KA's)

ANSWER: 097 (1.00)

a.

REFERENCE:

N2-OLT-29 page 5, L.O. 29-3-5.
[4.1/4.1]***
215005A104 ..(KA's)

ANSWER: 098 (1.00)

c.

REFERENCE:

N2-OLT-9 page 10, L.O. 9-6d.
[3.5/3.6]***
202002K101 ..(KA's)

ANSWER: 099 (1.00)

c.

REFERENCE:

N2-OLT-16 page 12, L.O.16-3.
[3.5/3.5]
217000K604 ..(KA's)

ANSWER: 100 (1.00)

a.

REFERENCE:

N2-OLT-18 page 17, L.O.18-3c.
[3.2/3.4]
264000A403 ..(KA's)

(********** END OF EXAMINATION **********)

ATTACHMENT 2
Reactor Operator Written Examination and Answer key

U. S. NUCLEAR REGULATORY COMMISSION
REACTOR OPERATOR LICENSE EXAMINATION
REGION 1

FACILITY: Nine Mile Point 2

REACTOR TYPE: BWR-GE5

DATE ADMINISTERED: 90/08/20

CANDIDATE:

Master Copy

INSTRUCTIONS TO CANDIDATE:

Points for each question are indicated in parentheses after the question. To pass this examination, you must achieve an overall grade of at least 80%. Examination papers will be picked up four and one half (4 1/2) hours after the examination starts.

NUMBER QUESTIONS	TOTAL POINTS	CANDIDATE'S POINTS	CANDIDATE'S OVERALL GRADE (%)
100	100.00		

All work done on this examination is my own. I have neither given nor received aid.

Candidate's Signature

NRC RULES AND GUIDELINES FOR LICENSE EXAMINATIONS

During the administration of this examination the following rules apply:

1. Cheating on the examination means an automatic denial of your application and could result in more severe penalties.

2. After the examination has been completed, you must sign the statement on the cover sheet indicating that the work is your own and you have not received or given assistance in completing the examination. This must be done after you complete the examination.

3. Restroom trips are to be limited and only one candidate at a time may leave. You must avoid all contacts with anyone outside the examination room to avoid even the appearance or possibility of cheating.

4. Use black ink or dark pencil only to facilitate legible reproductions.

5. Print your name in the blank provided in the upper right-hand corner of the examination cover sheet.

6. Fill in the date on the cover sheet of the examination (if necessary).

7. You may write your answers on the examination question page or on a separate sheet of paper. USE ONLY THE PAPER PROVIDED AND DO NOT WRITE ON THE BACK SIDE OF THE PAGE.

8. If you write your answers on the examination question page and you need more space to answer a specific question, use a separate sheet of the paper provided and insert it directly after the specific question. DO NOT WRITE ON THE BACK SIDE OF THE EXAMINATION QUESTION PAGE.

9. Print your name in the upper right-hand corner of the first page of answer sheets whether you use the examination question pages or separate sheets of paper. Initial each of the following answer pages.

10. Before you turn in your examination, consecutively number each answer sheet, including any additional pages inserted when writing your answers on the examination question page.

11. If you are using separate sheets, number each answer and skip at least 3 lines between answers to allow space for grading.

12. Write "Last Page" on the last answer sheet.

13. Use abbreviations only if they are commonly used in facility literature. Avoid using symbols such as < or > signs to avoid a simple transposition error resulting in an incorrect answer. Write it out.

14. The point value for each question is indicated in parentheses after the question. The amount of blank space on an examination question page is NOT an indication of the depth of answer required.

15. Show all calculations, methods, or assumptions used to obtain an answer.

16. Partial credit may be given. Therefore, ANSWER ALL PARTS OF THE QUESTION AND DO NOT LEAVE ANY ANSWER BLANK. NOTE: partial credit will NOT be given on multiple choice questions.

17. Proportional grading will be applied. Any additional wrong information that is provided may count against you. For example, if a question is worth one point and asks for four responses, each of which is worth 0.25 points, and you give five responses, each of your responses will be worth 0.20 points. If one of your five responses is incorrect, 0.20 will be deducted and your total credit for that question will be 0.80 instead of 1.00 even though you got the four correct answers.

18. If the intent of a question is unclear, ask questions of the examiner only.

19. When turning in your examination, assemble the completed examination with examination questions, examination aids and answer sheets. In addition, turn in all scrap paper.

20. To pass the examination, you must achieve an overall grade of 80% or greater.

21. There is a time limit of (4 1/2) hours for completion of the examination. (or some other time if less than the full examination is taken.)

22. When you are done and have turned in your examination, leave the examination area as defined by the examiner. If you are found in this area while the examination is still in progress, your license may be denied or revoked.

QUESTION: 001 (1.00)

The reactor is operating at 100% power when air is lost to the in-service CRD Flow Control Valve (FCV).

Which ONE of the following is the expected plant response?

a. The FCV will remain as is, no effect on rods.

b. The FCV will fail open, causing rods to drift in.

c. The FCV will fail open, causing rods to drift out.

d. The FCV will fail closed, causing CRD high temperatures.

QUESTION: 002 (1.00)

The reactor is operating at 100% power when a Rod Drift Alarm is received.

Which ONE of the following is a potential cause for the rod drift?

a. Low instrument air system pressure.

b. Start of the standby CRD pump.

c. Overcharged nitrogen accumulator.

d. Leaking piston seal on scram accumulator.

QUESTION: 003 (1.00)

The reactor is operating at 32% power when condenser vacuum begins decreasing. The reactor operator immediately starts decreasing power by closing down the reactor recirculation flow control valves and then inserting CRAM rods in accordance with N2-OP-101D-H.1, Rapid Power Reduction. Reactor power is not decreasing fast enough to prevent a turbine trip on low condenser vacuum, so the Shift Supervisor orders peripheral control rods scrammed from the individual rod scram test switches although this is not in accordance with the procedure.

Which ONE of the following is the consequence of individually scramming control rods in this situation?

a. The Reactor Sequence Control System will be rendered inoperative increasing the potential for fuel damage.

b. The Rod Worth Minimizer will be rendered inoperative increasing the potential for fuel damage.

c. The Rod Block Monitor will limit rod insertion to one notch once 20% reactor power has been reached.

d. The potential for fuel damage has been increased due to operation with unanalyzed rod patterns.

QUESTION: 004 (1.00)

Which ONE of the following correctly describes the operation of the Rod Worth Minimizer to prevent rod motion errors?

a. Prevents withdraw/insert errors when required by applying rod blocks immediately following rod selection.

b. Withdraw/insert errors will generate rod blocks when reactor power is between LPAP and LPSP and power is decreasing.

c. Withdraw/insert blocks are NOT generated if RPIS data is lost when below LPSP.

d. Withdraw/insert blocks will be generated if above the LPAP and no sequence is selected.

QUESTION: 005 (1.00)

When operating at 70% with only one Reactor Recirculation pump running, which ONE of the following conditions represents the plant status?

a. Loop Flow in the shutdown loop will indicate zero.

b. Indicated total core flow will be the SAME as actual core flow.

c. Indicated total core flow will be GREATER than actual total core flow.

d. Indicated total core flow will be LESS than actual total core flow.

QUESTION: 006 (1.00)

Which ONE of the following is a symptom that the lower orifice of a recirculation pump seal is plugged?

a. The lower seal pressure decreases.

b. The lower seal pressure increases.

c. The upper seal pressure decreases.

d. The upper seal pressure increases.

QUESTION: 007 (1.00)

Which ONE of the following Reactor Building Closed-loop Cooling System loads CANNOT physically use service water as an alternate cooling source?

a. Reactor recirculation pump motor winding coolers, motor bearing coolers, and seal coolers.

b. Control rod drive pump seal coolers and speed increaser.

c. Seal cooler for the residual heat removal pumps.

d. Spent fuel pool heat exchangers.

QUESTION: 008 (1.00)

Which ONE of the following is NOT required to be met for a low speed Reactor Recirculation Pump start?

a. Feedwater flow less than 30%.

b. The flow control valve in manual mode.

c. Pump speed less than 20%.

d. Reactor vessel level above Level 3.

QUESTION: 009 (1.00)

Which ONE of the following conditions will NOT directly input to the Recirculation Flow Control Valve Motion Inhibit Interlock?

a. Hydraulic Power Unit Failure.

b. Control Circuit Failure.

c. Level 2 Water Level.

d. High Drywell Pressure.

QUESTION: 010 (1.00)

The Residual Heat Removal (RHS) pump starting sequence after receipt of a LOCA signal with offsite power available is:

a. A and B RHS pumps start immediately and the C pump starts after a 5 second time delay.

b. A and B RHS pumps start immediately and the C pump starts after a 10 second time delay.

c. A and B RHS pumps start with a 5 second time delay and C pump starts after a 10 second time delay.

d. A and B RHS pumps start after a 10 second time delay and the C pump starts after a 15 second time delay.

QUESTION: 011 (1.00)

Which ONE of the following correctly describes the proper automatic system response when the Reactor Water Cleanup System (WCS) non-regenerative heat exchanger outlet temperature exceeds 140 degrees F.?

a. The WCS pumps will trip after a 15 second time delay.

b. The WCS pumps will trip when the Inboard isolation valve (MOV-102) closes.

c. The WCS pumps will trip when the Inboard (MOV-102) and Outboard isolation valves (MOV-112) close.

d. The WCS pumps will trip when the Outboard isolation valve (MOV-112) closes.

QUESTION: 012 (1.00)

The shutdown cooling suction valve (MOV-2A) is to be opened in preparation for commencing shutdown cooling. Based on the valve interlock logic, which ONE of the following valves does NOT have to be closed to open MOV-2A?

a. MOV-24A, LPCI Injection Valve.

b. MOV-33A, Suppression Pool Spray Valve.

c. MOV-1A, Suppression Pool Suction Valve.

d. FV-38A, Test Return Valve.

QUESTION: 013 (1.00)

Which ONE of the following statements concerning the Low Pressure Core Spray System is INCORRECT?

a. If the LPCS/LPCI "A" manual pushbutton is armed and depressed the Division 1 Diesel will automatically start.

b. The initiation sequence is started by high drywell pressure (1.68 psig) and/or Level 2 reactor vessel water level (108.8 inches).

c. When the system is in standby, the pump suction valve, MOV 112, is open.

d. When the system is in standby, the water leg pump is running continuously

QUESTION: 014 (1.00)

An inadvertent initiation of the High Pressure Core Spray System occurs while NMP2 is at 100% power.

After the initial transient has subsided, which ONE of the following is the correct reactor response when compared to 100% power conditions?

a. An INCREASE in reactor pressure and a small INCREASE in reactor power.

b. An INCREASE in reactor pressure and a small DECREASE in reactor power.

c. A DECREASE in reactor pressure and a small INCREASE in reactor power.

d. A DECREASE in reactor pressure and a small DECREASE in reactor power.

QUESTION: 015 (1.00)

The Standby Liquid Control System has automatically initiated due to a valid initiation signal.

Which ONE of the following conditions would you NOT expect to see?

a. Pumps A and B start lights on.

b. Squib valve white continuity lights on.

c. Reactor Water Cleanup System inboard isolation valve closed.

d. Reactor Water Cleanup System outboard isolation valve closed.

QUESTION: 016 (1.00)

Backup Scram Valves provide a redundant means of venting air from the scram pilot valves and scram discharge valves. These backup valves are:

a. Normally energized and will de-energize upon a RPS scram signal.

b. Aligned such that two valves in series, one from each RPS trip channel, must actuate to vent the scram air header.

c. Designed such that both RPS channels must trip in order for any one of the valves to actuate.

d. Powered from the RPS Buses A and B.

QUESTION: 017 (1.00)

Concerning the Redundant Reactivity Control System, select the ONE set of conditions which does NOT initiate the indicated logic.

a. Alternate Rod Insertion: High reactor pressure (1050 psig).

b. High to Low Speed Transfer of the RRS pumps: Level 2 reactor water level (108.8 inches).

c. Feedwater Runback: High reactor pressure (1050 psig) and 25 second time delay and power NOT below APRM downscale trip point.

d. SLC Injection: Level 2 reactor water level and 98 second time delay and power NOT below APRM downscale trip point.

QUESTION: 018 (1.00)

A TIP trace is being taken when an instrument technician error causes a Group 3 containment isolation signal.

Which ONE of the following correctly describes the response of the TIP system?

a. The TIP shear valve automatically fires to cut the detector cable and seal the guide tube.

b. The TIP guide tube ball valve automatically closes, cutting the detector cable and sealing the guide tube.

c. The TIP drive automatically shifts to reverse and withdraws the detector to the shield position, and the ball valve closes.

d. The TIP drive automatically shifts to reverse and withdraws the detector to the shield position, and the shear valve closes.

QUESTION: 019 (1.00)

The reactor is operating at 38% power and a center rod is selected. Two "C" level LPRM inputs to Channel "A" RBM are failed DOWNSCALE.

Which ONE of the following correctly describes the minimum LPRM failure combinations that will result in a Channel "A" RBM rod block?

a. 1 "A" level LPRM fails downscale.

b. 2 "A" level LPRMs fail downscale.

c. 1 "A" level and 1 "C" level LPRMs fail downscale.

d. 2 "A" level and 1 "C" level LPRMs fail downscale.

QUESTION: 020 (1.00)

The following reactor conditions exist:

- Reactor mode switch in STARTUP.
- IRM "G" BYPASSED and selector switch in STANDBY.
- All other IRM'S on Range 4

Which one of the following conditions correctly describes the expected plant conditions after IRM "G" is taken out of BYPASS?

a. Rod block and RPS A Half Scram.

b. Rod block and RPS B Half Scram.

c. Rod Block and NO Half Scram.

d. Full Scram.

QUESTION: 021 (1.00)

NMP2 is being shutdown by rod insertion. IRM "B" is reading 11 on range 7.

Which ONE of the following is the expected plant response if the operator places IRM "B" range switch to range 6?

a. No response.

b. Half scram in RPS A.

c. Half scram in RPS B.

d. Rod block.

QUESTION: 022 (1.00)

A reactor startup is in progress with the mode switch in the STARTUP position. SELECT the statement that does NOT correctly describe how the SRM system will respond.

a. A rod block will occur if 'A' SRM is not fully inserted and it reads 80 cps with all IRMs at range 4.

b. If the shorting links were removed, a full scram will occur if only the 'A' SRM reads 2x10E5 cps.

c. A rod block will occur if only the 'A' SRM experienced a low detector voltage with all IRMs reading 75 on range 4.

d. A rod block will occur if only the 'A' SRM failed down-scale with all IRMs reading 75 on range 2.

QUESTION: 023 (1.00)

The plant is at 100% power when a complete loss of all 24 VDC occurs.

Select the statement which correctly describes the automatic plant response.

a. Rod Block only.

b. 1/2 scram only.

c. Scram.

d. No automatic response other than alarms.

QUESTION: 024 (1.00)

The following plant conditions exist:

- Reactor Power 45%.
- Total Recirculation Flow 35%.
- Two Recirculation Loop Operation.

If reactor power is increased to 70% with control rod manipulation, which ONE of the following would occur? ASSUME total recirculation flow remains constant.

a. A Rod Block only.

b. A Rod Block and a Flow Biased Trip Scram.

c. A Rod Block and a Neutron Trip Scram.

d. No automatic action.

QUESTION: 025 (1.00)

The APRM flow units have a 10% mismatch trip unit associated with them.

Which ONE of the following defines when the mismatch occurs?

a. One recirculation loop flow differs from the other recirculation loop flow by more than 10%.

b. One recirculation loop flow differs from the average recirculation loop flow by more than 10%.

c. Total recirculation flow is 10% above the flow biased APRM trip setpoint.

d. Total recirculation flow measured by one flow unit differs from that of an associated flow unit by more than 10%.

QUESTION: 026 (1.00)

Which ONE of the following events would result in the reactor vessel narrow range level instrumentation reading lower than actual reactor vessel level?

a. Elevated drywell temperature.

b. Reference leg rupture.

c. Reactor Pressure Vessel depressurization accompanied by high drywell temperature

d. Variable leg rupture.

QUESTION: 027 (1.00)

A valid Reactor Core Isolation Cooling System (ICS) initiation signal occurred. The ICS steam admission bypass valve (MOV-159) FAILED to open.

Which ONE of the following correctly describes the expected response of the ICS steam admission valve (MOV-120)?

a. Opens immediately.

b. Will not open.

c. Opens five (5) seconds after the initiation signal.

d. Opens ten (10) seconds after the initiation signal.

QUESTION: 028 (1.00)

Following an automatic initiation of the Reactor Core Isolation Cooling System (ICS), the reactor vessel level is 187 inches and slowly increasing.

Which ONE of the following is the expected ICS response if the manual isolation pushbutton is depressed?

a. MOV-121, Steam Supply Outboard Isolation Valve, closes causing an ICS turbine trip due to the isolation signal.

b. MOV-128, Steam Supply Inboard Valve, closes but will cycle back open due to the initiation signal.

c. The manual isolation pushbutton has no effect on ICS isolation due to the automatic initiation signal present.

d. MOV-128, Steam Supply Inboard Valve, will close and after the isolation delay timer times out MOV-121, Steam Supply Outboard Isolation Valve, will close.

QUESTION: 029 (1.00)

Select the statement that correctly describes the response of the Safety Relief Valves operated from the Remote Shutdown Panel (RSP) when operating in the Appendix R mode.

a. The valves will function automatically in both the relief and ADS modes.

b. The valves will only function automatically in the ADS mode.

c. The valves will only function automatically in the relief mode.

d. The valves will function by operating them manually from the RSP.

QUESTION: 030 (1.00)

The following conditions exist for NMP2:

- ADS	Automatically initiated after the 105 second timer times out.
- Drywell Pressure	6 psig and stable.
- Reactor water level	16 inches and slowly increasing.
- Low Pressure Core Spray and Residual Heat Removal Pumps.	All pumps are running.

Which ONE of the following will result in automatically closing the ADS valves?

a. Securing all Residual Heat Removal pumps.

b. Depressing the ADS A and B logic seal-in reset pushbuttons.

c. Repositioning the Initiation Inhibit Switches.

d. Securing all low pressure ECCS pumps (LPCS and RHS).

QUESTION: 031 (1.00)

In addition to high drywell pressure (1.68 psig), which ONE of the following will permit manual initiation of the Drywell Spray?

a. Only the "A" LPCI injection valve closed.

b. Only the "C" LPCI injection valve closed.

c. Both the "A" LPCI injection valve closed and a LOCA signal sealed in.

d. Both the "C" LPCI injection valve closed and a LOCA signal sealed in.

QUESTION: 032 (1.00)

The Primary Containment Hydrogen and Oxygen Analyzer automatically isolated due to a valid group isolation signal.

Which ONE of the following is the initiating signal that isolated the valves?

a. Reactor water level, 159.3 inches decreasing.

b. Main steam line flow, 140%

c. Drywell pressure, 1.68 psig increasing.

d. Main steam line radiation, 3X normal power background.

QUESTION: 033 (1.00)

An operator action required by the NMP2 Scram Procedure, N2-OP-101C-H.1, is to place the mode switch in the SHUTDOWN position.

Select the primary reason for this immediate operator action.

a. The ONE ROD OUT interlock is generated.

b. A Group I isolation signal is bypassed.

c. The bypass for MSIV isolation on Level 8 reactor water level is removed.

d. The bypass for a Group II isolation signal is removed.

QUESTION: 034 (1.00)

NMP2 is at 100% power when a small steam leak develops which causes drywell pressure to increase to 3.0 psig. The reactor scrams and reactor water level decreases to 170 inches before being restored to the normal band.

SELECT the group isolations that should have occurred.

a. Groups 1,2,4,8

b. Groups 3,4,8,9

c. Groups 3,4,5,7

d. Groups 2,3,5,9

QUESTION: 035 (1.00)

Given the following conditions:

- Reactor Mode Switch in REFUEL.
- One control rod has been withdrawn.

Which ONE of the following will initiate a Reverse Bridge Motion Block (either #1 or #2) as the bridge approaches the vessel?

a. The Main-Hoist loaded with 450 lbs. and the Trolley Auxiliary Hoist loaded with 300 lbs.

b. The Main-Hoist loaded with 300 lbs. and the Trolley Auxiliary Hoist loaded with 450 lbs.

c. The Main-Hoist loaded with 450 lbs. and the Monorail Auxiliary Hoist loaded with 300 lbs.

d. The Trolley Auxiliary Hoist and the Monorail Auxiliary Hoist both loaded with 300 lbs.

QUESTION: 036 (1.00)

With the reactor operating at 35% power, which ONE of the following combinations of Turbine Stop Valves, if closed, would cause a HALF Scram?

a. SVOS 1 and 2.

b. SVOS 2 and 3.

c. SVOS 1 and 4.

d. SVOS 1, 2 and 4.

QUESTION: 037 (1.00)

A safety relief valve starts to leak during full power operation.

Which ONE of the following correctly describes the expected plant response?

a. A DECREASE in indicated flow due to a DECREASE in delta-P across the reactor core.

b. An INCREASE in indicated core flow due to a DECREASE in delta-P across the reactor core.

c. A DECREASE steam flow signal sent to the feedwater control system due to an INCREASE in the steam flow through the relief valve.

d. An INCREASE steam pressure signal sent to the electro-hydraulic control system to compensate for the DECREASE in the steam line pressure.

QUESTION: 038 (1.00)

NMP2 is at 100% power with the EHC Pressure Regulator A in control and Pressure Regulator B as backup when the output of Pressure Transmitter A fails low. (Figure 4, Turbine Control Unit is enclosed for your reference.)

Select the correct expected plant response if no operator action is taken.

a. Control valves fully close and bypass valves fully open. The reactor scrams due to high neutron flux.

b. Control valves fully open and bypass valves fully open. Reactor pressure decreases until a Group 1 isolation occurs.

c. Control valves open slightly and bypass valves remain closed. Reactor pressure stabilizes slightly lower than before the transient.

d. Control valves close slightly and bypass valves remain closed. Reactor pressure stabilizes slightly higher than before the transient.

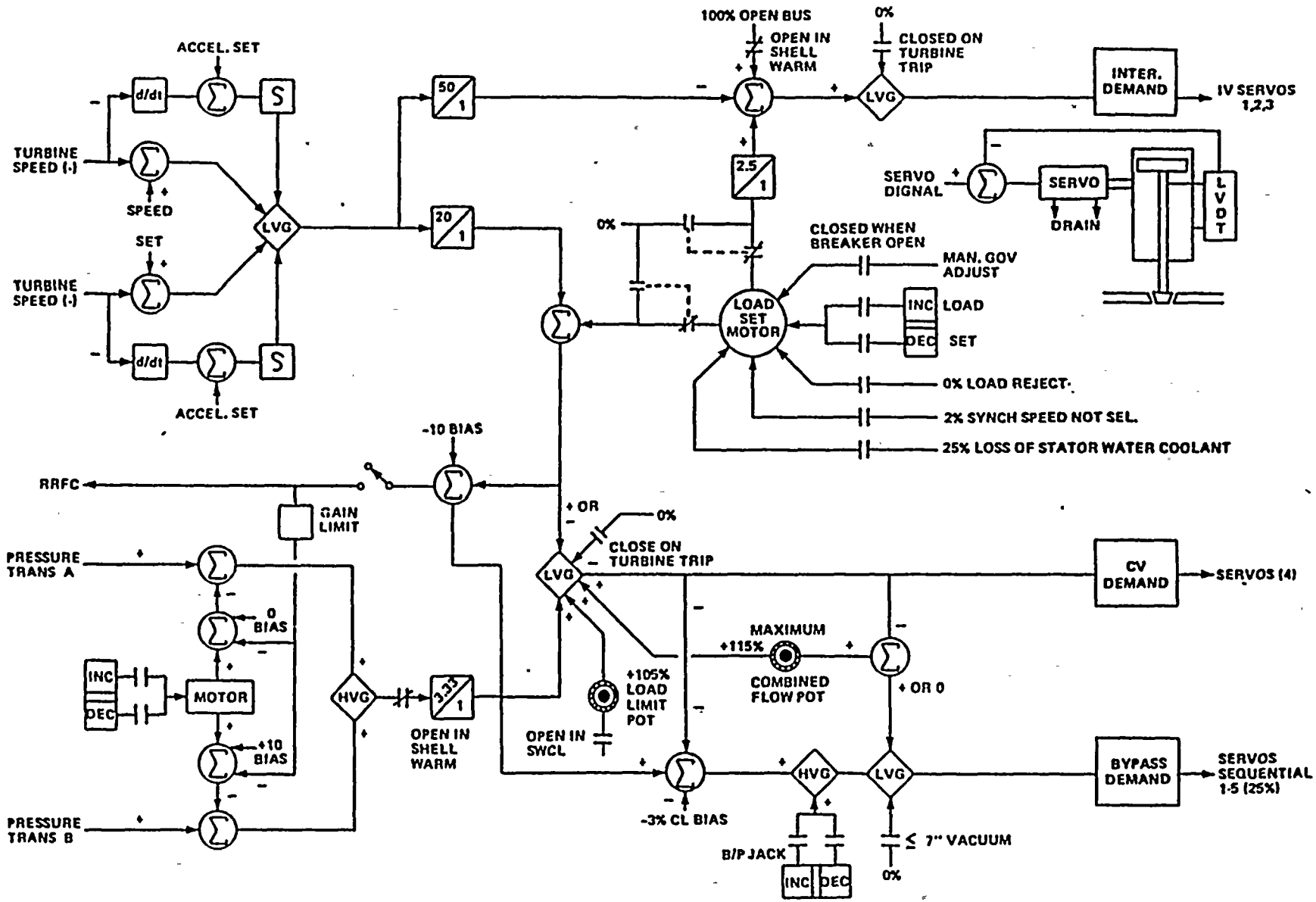

Figure 4	Rev. 2
Title: TURBINE CONTROL UNIT	

QUESTION: 039 (1.00)

Which ONE of the following provides the signal for the Turbine Control Valve (TCV) Fast Closure Scram?

a. TCV position limit switches.

b. Rate of TCV position change.

c. Power to the TCV fast-acting solenoids.

d. ETS oil pressure at the TCV.

QUESTION: 040 (1.00)

Given the following conditions:

- Reactor Power 100%.
- Feedwater and Condensate Systems operating normally.
- "A" and "B" Condensate Booster Pumps in service.
- "C" Condensate Booster Pump in standby.

Which ONE of the following initiates the automatic start signal to 'C' Condensate Booster Pump?

a. High Condensate Pump Discharge Pressure.

b. Low Condensate Booster Pump Header Flow.

c. Low Feedwater Pump Suction Pressure.

d. Low Feedwater Pump Discharge Pressure.

QUESTION: 041 (1.00)

The reactor is operating normally at 100% power when ONE steam flow signal to the feedwater level control system fails downscale.

Which ONE of the following correctly describes the response? (Assume NO operator actions.)

a. A steam/feed flow mismatch will be sensed and will lock the feedpumps in the last stable speed/flow position.

b. A steam/feed flow mismatch will be sensed and initiate a level increase resulting in a turbine trip.

c. A steam/feed flow mismatch will be sensed; however, level, being the overriding signal, will be maintained at the setpoint.

d. A steam/feed flow mismatch will be sensed and will result in reactor water level stabilizing below the tape setting.

QUESTION: 042 (1.00)

Which ONE of the following signals will always cause the Standby Gas Treatment System to automatically start?

a. Drywell temperature of 135 degrees F.

b. Drywell pressure of 3 psig.

c. Manual start of the DIVISION III Diesel Generator.

d. Reactor vessel level of 120 inches.

QUESTION: 043 (1.00)

An electrical fault de-energizes the 4.16 KV emergency switchgear bus 2ENS*SWG 101 (DIVISION I).

Which ONE of the following loads will NOT be directly affected?

a. Residual Heat Removal Pump A, 2RHS*P1A.

b. Residual Heat Removal Pump C, 2RHS*P1C.

c. Low Pressure Core Spray Pump, 2CSL*P1.

d. Service Water Pump C, 2SWP*P1C.

QUESTION: 044 (1.00)

Which ONE of the following statements describes the alternate and backup power for the Uninterruptable Power Supply, 2VBB-UPS1A?

a. Alternate 2NJS-US5, Backup 2BYS-SWG001B 125V DC.

b. Alternate 2NJS-US5, Backup 2BYS-SWG001A 125V DC.

c. Alternate 2NJS-US6, Backup 2BYS-SWG001B 125V DC.

d. Alternate 2NJS-US6, Backup 2BYS-SWG001A 125V DC.

QUESTION: 045 (1.00)

A LOCA occurs concurrent with a loss of offsite power.

Which ONE of the following pieces of equipment will NOT automatically restart after the emergency busses are automatically re-energized by the diesel generators?

a. Residual heat removal pump.

b. Low pressure core spray pump.

c. CRD pump.

d. Service water pump.

QUESTION: 046 (1.00)

Concerning the trip signals on the Division III generator output breakers, select one set of signals which will trip the breakers under a LOCA condition?

a. Engine Overspeed or Generator Overcurrent.

b. Engine Overspeed or Generator Differential Current Lockout.

c. Generator Reverse Power or Generator Overcurrent.

d. Generator Reverse Power or Generator Differential Current Lockout.

QUESTION: 047 (1.00)

Which ONE of the conditions in the Main Steam Line (MSL) Radiation Monitoring System will initiate automatic actions other than alarms?

a. MSL Radiation Downscale.

b. MSL Radiation High.

c. Detector high current.

d. Detector high voltage power supply low.

QUESTION: 048 (1.00)

Given the following conditions:

- Reactor Power 100%.
- Both channels of the Offgas Process Radiation Monitor are reading high and giving a valid 'Offgas Radiation High' computer printout.

Which ONE of the following correctly describes the expected plant response?

a. After a 15 minute delay, the Offgas Exhaust to Stack Isolation Valve, 2OFG-AOV103, shuts and both offgas vacuum pumps trip.

b. Immediately, the Offgas Exhaust to Stack Isolation, Valve, 2OFG-AOV103, shuts and both offgas vacuum pumps trip.

c. After a 15 minute delay, the Offgas Exhaust to Stack Isolation Valve, 2OFG-AOV103, shuts and both offgas vacuum pumps trip immediately.

d. No automatic actions occur.

QUESTION: 049 (1.00)

A small break occurs in the Fire Protection Water Subsystem header decreasing pressure to 85 psig. Header pressure is automatically restored to above 135 psig after 120 seconds.

Which ONE of the following conditions describe the expected fire protection system configuration after the pressure is restored?

a. Both maintenance pumps, the motor-driven pump and the engine-driven pump are running.

b. Both maintenance pumps and the motor-driven pump are running.

c. Only the LEAD maintenance pump is running.

d. Only the motor-driven pump is running.

QUESTION: 050 (1.00)

Upon receipt of a Reactor Building Ventilation High Radiation Level signal, which ONE of the following automatic actions does NOT occur?

a. Isolation of the reactor building ventilation system by closing of dampers.

b. Autostart permissive signals provided to the Emergency Recirculation Units.

c. Securing of the normal control room air supply and directing the makeup air through a special filter train.

d. Starting of the Standby Gas Treatment System fan and filter train.

QUESTION: 051 (1.00)

Concerning the reactor vessel internals, select the component which assures there is adequate core flow to the high powered fuel bundles.

a. Core plate.

b. Fuel support piece.

c. Fuel channel.

d. Stub tubes

QUESTION: 052 (1.00)

Select the ONE statement below that requires the operator to immediately place the reactor mode switch in SHUTDOWN following a sudden decrease in core flow, in accordance with N2-OP-101D, Power Changes.

a. Oscillations of 8% peak to peak on any APRM.

b. Operation on the Extended Load Line Limit Analysis (ELLLA) region with total core flow 43% (47 mlb/hr).

c. Oscillations of 15% peak to peak on any LPRM, periodically exceeding its upscale or downscale alarm point.

d. Operation on the 80% Rod line with total core flow < 45% (49mlb/hr).

QUESTION: 053 (1.00)

While operating at 100% power, it is suspected that the "rams head" separates from the riser on Jet Pump 3 and 4.

Which ONE of the following is NOT a symptom of the suspected failure?

a. Flow in the affected recirc. loop (A) decreases.

b. Reactor power decreases.

c. Indicated total core flow decreases.

d. The affected jet pump indicated flow goes to zero then increases.

QUESTION: 054 (1.00)

While operating at 25% power, main condenser vacuum decreases to 22" Hg vacuum.

Which ONE of the following automatic actions will occur?

a. MSIV closure, reactor scram and turbine trip.

b. Turbine exhaust sprays automatically initiate only.

c. Turbine trip and automatic reactor scram.

d. Turbine trip only.

QUESTION: 055 (1.00)

While operating at 100% power a loss of voltage from the reserve station service transformer 1A occurs.

Select the ONE statement below which correctly describes the expected response of the emergency AC power system.

a. Division 1 emergency diesel starts, the generator breaker closes and load sequencing begins.

b. Division 1 emergency diesel starts and runs on no-load.

c. Bus ENS*SWG102 automatically transfers to a backup source from the auxiliary boiler transformer.

d. Bus ENS*SWG102 automatically transfers to a backup source from reserve station service transformer, 1B.

QUESTION: 056 (1.00)

While operating at full power, the DIV I Emergency DC Bus deenergizes.

In accordance with N2-OP-74A, Emergency D.C. Distribution, the operator is required to manually scram the reactor, which ONE of the following is a reason for this action?

a. Group 8 and 9 outboard containment isolation occurs.

b. All SRV relief functions are lost.

c. Div I RRCS lost including power to Div I ARI valves.

d. Both reactor recirc. pumps trip off.

QUESTION: 057 (1.00)

Select the ONE statement below that correctly describes the expected automatic response of the reactor recirc. pumps as a result of a main turbine trip?

a. Recirc. pumps trip to off if operating in fast regardless of the initial reactor power.

b. Recirc. pumps trip to low speed if operating in fast only if the reactor power is initially above 30%.

c. Recirc. pumps trip to low speed if operating in fast regardless of the initial reactor power.

d. Recirc. pumps trip to off if operating in low speed if reactor power is initially above 30 %.

QUESTION: 058 (1.00)

A turbine trip and a reactor scram have occured after an extended period of full power operation.

Select the ONE statement below that correctly describes the preferred method of controlling RPV pressure below 1076 psig, in accordance with RPV Control, N2-EOP-RPV.

a. RCIC

b. Main steam line drains.

c. Main turbine bypass valves.

d. SRVs

QUESTION: 059 (1.00)

Select the ONE statement below that is correct concerning the Shutdown Cooling (SDC) mode of the Residual Heat Removal System (RHS).

a. Reactor pressure >128 psig will generate an automatic isolation signal for the SDC containment isolation valves (MOV 112 and 113), SDC return valves (MOV 40 A and B), SDC bypass valves (MOV 67A and B), and the reactor head spray valve (MOV 104).

b. Reactor pressure >128 psig will generate an automatic isolation signal for the SDC containment isolation valves (MOV 112 and 113), SDC return valves (MOV 40 A and B), and trip the RHS pumps.

c. Reactor vessel level <159.3" will generate an automatic isolation signal for the SDC containment isolation valves (MOV 112 and 113) and interlock closed the suppression pool spray (MOV 33A and B) and test return (MOV 30A and B) valves.

d. A drywell high pressure signal >1.68 psig will generate both an automatic RHS sample and radwaste discharge (Group 4) and a SDC and reactor head spray valve (Group 5) containment isolation signals.

QUESTION: 060 (1.00)

Select the ONE statement below that correctly describes the expected automatic response to a reactor vessel high level condition (level 8).

a. Reactor feed pumps trip.

b. RCIC turbine trip throttle valve, MOV 150, trips.

c. Reactor scram signal generated on a level 8 vessel level signal.

d. Reactor feed pumps and condensate booster pumps trip.

QUESTION: 061 (1.00)

RPV Control, N2-EOP-RPV Section RL contains a table which cautions the operator not to use the RPV water level instruments below a minimum indicated level with drywell temperature below 350 degrees F and at or above 350 degrees F.

Which ONE of the following correctly describes the basis for the minimum RPV indicated level when drywell temperature is at or above 350 degrees F?

a. Reference leg flashing will cause indicated level to be stable, while actual level is decreasing.

b. Natural circulation flow through the Jet Pumps results in a higher indicated level than actual.

c. Variable leg flashing will cause indicated level to be higher than actual.

d. Reference leg flashing could cause indicated level to be stable or increasing while actual level is below the lower instrument tap.

QUESTION: 062 (1.00)

Select the ONE plant condition that is NOT an entry condition for RPV Control, N2-EOP-RPV.

a. RPV level 161 inches.

b. Drywell pressure 1.70 psig.

c. RPV pressure 1057 psig.

d. A Group 1 isolation has occurred.

QUESTION: 063 (1.00)

Select the ONE statement below that correctly describes the action required to restore reactor building closed loop cooling water to the drywell coolers, following a LOCA actuation signal, with a high drywell pressure signal sealed in.

a. Jumper around and reset the PCIS group 8 isolation signal.

b. Manually open the RBCLCW containment isolation MOVs.

c. Override the LOCA signal with the drywell unit cooler Div I (II) LOCA override switches on P873 and reopen the containment isolation valves.

d. Override the LOCA signal with the drywell unit cooler fans GR 1/2 LOCA override Switches on P873, the valves will reopen when the fans are started.

QUESTION: 064 (1.00)

Select the ONE statement below that correctly describes the basis for the following procedural step in N2-EOP-PC, Primary Containment Control; "IF any stuck open SRV can not be closed within 5 minutes, place the Reactor Mode Switch in Shutdown".

a. One stuck open SRV exceeds the design heat removal capacity of both loops of suppression pool cooling.

b. The Heat Capacity Temperature Limit (HCTL) will be exceeded after 5 minutes.

c. The RHR System will not be available for suppression pool cooling for ten minutes, if a LOCA signal is present.

d. Prolong the availability of the suppression pool as a heat sink.

QUESTION: 065 (1.00)

Select the ONE statement below that correctly describes when a Rod Block will occur when the Reactor Mode Switch is in Refuel.

a. One rod not full in, a second rod selected

b. Refuel platform near or over reactor vessel.

c. The reactor building crane operating over the reactor vessel.

d. Refuel grapple loaded (>550 lbs) operating over the spent fuel pool.

QUESTION: 066 (1.00)

Following a failure to scram the following conditions exist:

- No CRD pumps are operating or available.
- CRD scram inlet and outlet valves indicate open in the control room.

Based on the above conditions, which ONE of the following methods is utilized in N2-OP-97, Reactor Protection System, to insert control rods?

a. Manually open the scram discharge vent and drain valves.

b. Manually vent the scram air header.

c. Manually vent the CRD above piston area.

d. Hook up a portable hydro pump to supply CRD drive pressure.

QUESTION: 067 (1.00)

Following a failure to scram with CRD pumps operating, which ONE of the following actions is required to manually insert (drive) control rods?

a. Pull fuses to fail closed the ARI Valves.

b. Defeat RPS interlocks and reset the Scram.

c. Install jumpers to defeat RSCS.

d. Open the charging header isolation valve, 2RDS-V28.

QUESTION: 068 (1.00)

The NMP2 control room must be evacated because of heavy smoke.

In accordance with N2-OP-78, Remote Shutdown System, which ONE of the following is NOT an action that the CSO should perform prior to leaving the control room?

a. Scram the reactor by using the manual pushbuttons.

b. Place the mode switch in the 'SHUTDOWN' position.

c. Verify the scram by checking all rods in on the full core display or the RSCS display.

d. Sound the Station Alarm.

QUESTION: 069 (1.00)

Select the ONE statement below that correctly describes an automatic function that is bypassed when the Appendix "R" disconnect switches are placed in the actuate position.

a. Emergency diesel generator automatic start.

b. RCIC steam inlet valve (MOV-120) high level closure.

c. Emergency diesel generator cooling water high temperature trip.

d. Automatic start of high pressure core spray.

QUESTION: 070 (1.00)

Select the ONE type of system below that would be isolated after entering N2-EOP-SC, Secondary Containment Control.

a. Systems required to shutdown the reactor.

b. Systems required for adequate core cooling.

c. Fire Suppression systems.

d. Auxiliary cooling water systems.

QUESTION: 071 (1.00)

In accordance with N2-OP-13, Reactor Building Closed Loop Cooling System, select the ONE statement below that is a required action following a complete loss of all RBCLCW main pumps while operating at full power.

a. Supply service water to RBCLCW loads which service water can supply and commence a controlled reactor shutdown.

b. Isolate large heat loads and commence a controlled reactor shutdown.

c. Place the reactor mode switch to shutdown.

d. Isolate the drywell cooling loops, transfer the recirc. pumps to low speed, then place the reactor mode switch to shutdown.

QUESTION: 072 (1.00)

Select the ONE statement below that correctly describes the expected automatic response of the instrument and service air system to a decreasing instrument air system pressure.

a. The containment isolation valves will automatically close and isolate air to the containment, at 90 psig decreasing.

b. CRD scram air header low pressure will cause an automatic reactor scram at 65 psig decreasing.

c. The breathing air system compressor will automatically start and supply the instrument air system at 70 psig decreasing

d. The service air system supply isolation valve, 2IAS-AOV171 will close automatically at 85 psig decreasing.

QUESTION: 073 (1.00)

While operating at 100% power, a valid high steam flow signal is received in the "B" Main Steam Line.

Which ONE of the following correctly describes the expected automatic response of the Main Steam System to this event?

a. Only the "B" steam line inboard and outboard MSIV's will close.

b. A Group 1, containment isolation signal will result.

c. A Half Group 1, (Division II) containment isolation logic actuation will result.

d. One solenoid on each MSIV will deenergize, but no valve actuation will occur.

QUESTION: 074 (1.00)

In accordance with N2-OP-31, Residual Heat Removal System, select the ONE statement below that correctly describes how the cooldown rate is controlled when utilizing the Alternate Shutdown Cooling flowpath, through the SRVs.

a. By throttling the RHR or LPCS injection flowrate.

b. By throttling the reactor water cleanup, non-regenerative heat exchanger cooling water flow.

c. By throttling an RHR heat exchanger bypass valve in suppression pool cooling.

d. By opening or closing SRVs as required.

QUESTION: 075 (1.00)

In accordance with N2-OP-31, Residual Heat Removal System, select the ONE statement below that correctly describes the basis for raising RPV water level to 227-243 inches following a loss of shutdown cooling.

a. To aid in establishing a natural circulation flowpath.

b. To increase NPSH of the recirc. pumps to allow starting one of them.

c. To increase NPSH of the reactor water cleanup pump to allow a system higher flowrate.

d. To initiate alternate shutdown cooling by starting flow through the SRVs.

QUESTION: 076 (1.00)

While operating at full power, both CRD pumps are lost.

In accordance with N2-OP-30, Control Rod Drive, which ONE of the following correctly describes when the operator is required to place the mode switch to shutdown?

a. After 20 minutes if unable to start a CRD pump.

b. When any control rod starts drifting in.

c. When more than one control rod high temperature alarm is received.

d. When more than one CRD accumulator fault alarm is received.

QUESTION: 077 (1.00)

Technical Specification 3.9.9 requires that at least 22 feet 3 inches of water be maintained over the top of irradiated fuel assemblies seated in the spent fuel storage pool racks.

Which ONE of the following is the basis for this requirement?

a. This level ensures adequate flow through the skimmer surge tanks to remove irradiated fuel decay heat.

b. This level ensures that 99% of the iodine released from the rupture of an irradiated fuel assembly will be removed by the water.

c. This level ensures that the radiation level at the surface of the pool will not exceed 10 mrem/hr.

d. This level ensures that an irradiated fuel assembly raised to the upper level on the refueling hoist will not expose the bridge operator to more than 10 mrem/hr.

QUESTION: 078 (1.00)

Select the ONE statement below that correctly describes the expected response of the HPCS system following automatic initiation.

a. Depressing the HPCS high water level trip reset switch with water level less than 202.3" (Level 8) will not automatically reopen the HPCS injection valve, CHS*MOV107, until the vessel level drops to 108.8" (Level 2 initiation set point).

b. Actuating the HPCS initiation reset switch, after the high drywell pressure signal has cleared, will remove the initiation "seal-in" but will not return the HPCS system to a standby status.

c. The high water level trip must be reset by the operator to reopen the HPCS injection valve if level falls below 108.8" (level 2) and the drywell pressure signal is cleared.

d. Following an inadvertent automatic initiation of HPCS, if level is below 203.3" (level 8), tripping the pump is the only way to stop injection.

QUESTION: 079 (1.00)

Select the ONE statement below that correctly describes the basis for the CAUTION in N2-OP-61A, Primary Containment Ventilation Purge and Nitrogen System, "DO NOT VENT, DEPRESSURIZE OR PURGE THE PRIMARY CONTAINMENT IF CONTAINMENT TEMPERATURE IS ABOVE 150 degrees F."

a. This is the maximum operating temperature for the standby gas treatment system (SBGT) filters.

b. Venting above this temperature will cause "chugging" at the downcomer vents.

c. Venting will result in excessive loss of non-condensables which could cause containment failure if sprays are subsequently used to lower pressure..

d. Containment sprays, which are in use above this temperature, would damage the SBGT filters.

QUESTION: 080 (1.00)

Select the ONE statement that correctly describes the basis for tripping the reactor recirculation pumps and the drywell cooling fans, prior to initiating drywell sprays.

a. Prevent exceeding the relief capacity of the drywell vacuum breakers.

b. Reduce the heat input to the drywell.

c. Prevent electrical damage to their motors.

d. Prevent excessive vibration that could damage piping system welds.

QUESTION: 081 (1.00)

The Emergency RPV Depressurization Procedure, N2-EOP-C2, directs the operator to use means other than the SRV's to emergency depressurize if the suppression pool level is below Elevation 192 feet.

Which ONE of the following is the reason for this action?

a. Below 192 feet SRV action causes excessive thrust on the downcomers.

b. Below 192 feet the suppression pool level is below the suppression pool temperature detection.

c. Below 192 feet the safety relief valves' discharges could be uncovered.

d. Below 192 feet the amount of water in the suppression pool has insufficient heat capacity for depressurization.

QUESTION: 082 (1.00)

While operating at 100% power a feedwater control system malfunction causes reactor water level to decrease to 157 inches. The reactor continues to operate at 100% power.

Which ONE of the following is a required immediate operator action?

a. Initiate a reactor scram.

b. Take manual control of the feedwater level control system and attempt to restore level.

c. Immediately start the third feedwater pump.

d. Shift the feedwater control system from 3 element to 1 element control and allow it to restore level automatically.

QUESTION: 083 (1.00)

Select the ONE condition below that would require entry into N2-EOP-PC, Primary Containment Control.

a. Drywell temperature 135 degrees F.

b. Primary containment pressure 1.60 psig.

c. Suppression pool temperature 88 degrees F.

d. Suppression pool water level EL. 199.0 feet.

QUESTION: 084 (1.00)

Select the ONE statement below that correctly describes the reason reactor power decreases when RPV water level is lowered to the top of active fuel following a failure to scram.

a. The natural circulation flowpath is broken causing the remaining water inside the shroud to boil and totally void the core region.

b. The driving head from the downcomer water level is reduced minimizing core flow, increasing the voids in the core region.

c. Carryunder increases, increasing the preheating of the coolant, reducing the core inlet subcooling of the coolant.

d. The mass of coolant in the reactor vessel is reduced, increasing its rate of voiding in the core region for a given heat flux.

QUESTION: 085 (1.00)

Secondary Containment Control, N2-EOP-SC, requires verification of the starting of the Standby Gas Treatment System if the HVR exhaust radiation level exceeds its isolation setpoint.

Which ONE of the following is the basis for this step?

a. Maintain secondary containment temperature below 135 degrees F.

b. Maintain positive secondary containment pressure.

c. Maintain negative secondary containment pressure.

d. Reduce airborne radiation levels in secondary containment.

QUESTION: 086 (1.00)

Select the ONE statement below that correctly describes the reason recirculation flow is runback to minimum, prior to tripping the recirculation pumps during implementation of N2-EOP-RPV, RPV Control, Section RQ.

a. Prevent a possible level swell from tripping the turbine generator.

b. Prevent a possible level shrink from isolating the MSIVs.

c. Prevent a level transient which would cause automatic initiation of HPCS and RCIC.

d. Prevent a power transient which would cause fuel cladding damage.

QUESTION: 087 (1.00)

Select the ONE statement below that correctly describes the basis for the N2-EOP-RR, Radioactive Release Control entry condition; "Above The Emergency Plan Alert Level".

a. This value is the Technical Specification limit for offsite releases.

b. This is the minimum threshold for accurate detection of an offsite release.

c. It is sufficiently high that it is not expected to occur during normal operation, but sufficiently low that by itself it does not threaten the health and safety of the public.

d. By only considering the contribution from Nine Mile Point 2, it allows use of the Alert limit, rather than the lower limit, if all three units at the site were included.

QUESTION: 088 (1.00)

While making rounds a plant operator using his key card is unable to enter a vital area for which he has access.

In accordance with AP-3.1, Control of Access, select the ONE statement below that correctly describes the procedure that should be utilized to enter this vital area.

a. Use a metal vital area key to enter and notify security when completed.

b. Advise security of your name and ACAD number prior to entering a vital area with a metal vital area key.

c. After a red light is received on the card reader twice, use a metal vital area key to obtain entry, then remain in the vital area for security.

d. Tailgate into the vital area with another authorized operator and inform security that your key card is damaged.

QUESTION: 089 (1.00)

In accordance with N2-ODI-5.11, 4.16, and 13.8 KV Breakers, select the ONE statement below that in addition to rubber gloves with leather protectors, describes the personnel safety equipment REQUIRED when electrically racking out a 13.8 KV breaker.

a. Safety glasses and/or face shield only.

b. Rubber floor mat and hard hat.

c. Hard hat, safety glasses and/or face shield.

d. Rubber floor mat, safety glasses and/or face shield.

QUESTION: 090 (1.00)

In accordance with Station General Order 88-6, Industrial Safety, select the ONE statement below that correctly describes the guidelines for working in high temperature areas.

a. Work time in areas 140 degrees or higher is limited to 30 minutes.

b. "Cool Vests" should be worn directly on the skin to maximize effectiveness

c. A "Buddy" system is only required for work in areas where the temperature is greater than 140 degrees F.

d. If the ice vest thaws completely it can still be used for an additional 10 minutes, as it still provides some cooling through evaporation.

QUESTION: 091 (1.00)

In accordance with N2-ODI-1.06, Verbal Communications, select the ONE statement below that correctly describes the recommended order of preference for communication devices to be used, if face to face communication during normal operation is not possible.

a. Sound powered headsets, in-plant telephones, PA system, hand held radios.

b. Sound powered headsets, hand held radios, PA system, in-plant telephones.

c. PA system, sound powered headsets, in-plant telephones, hand held radios.

d. Hand held radios, PA system in-plant telephones, sound powered headsets.

QUESTION: 092 (1.00)

In accordance with N2-ODI -1.06, Verbal Communications, select the ONE statement below that does NOT describe a correct verbal communication procedure operators must use during implementation of the EOPs.

a. Challenge orders they do not agree with.

b. In addition to supplying plant parameter values to the SSS, supply the trend if available.

c. Repeat the SSS's name and the information, until the SSS acknowledges receipt of the information.

d. Provide critical plant parameter data only when requested by the SSS.

QUESTION: 093 (1.00)

In accordance with AP-4.0, Administration of Operations, select the ONE statement below that is correct concerning the control room (CSO) log book.

a. The CSO log book is used for reference only and is not considered a legal document as is the SSS log book.

b. Detailed rod movements in accordance with an approved startup sequence are required to be entered in the CSO log.

c. All valid (other than testing) annunciator signals are required to be logged in the CSO log.

d. The CSO log must be filled out with black ink only.

QUESTION: 094 (1.00)

In accordance with AP-4.0, Administration of Operations, select the ONE statement below that correctly describes when a Reactor Operator may deviate from an approved procedure.

a. During emergency events when the EOP's have been entered.

b. If the operator determines that the sequence specified in the procedure is irrelevant.

c. If during the conduct of a procedure the operator determines the procedure is in error.

d. While waiting for the SSS and ASSS to approve and process a non-intent change to a procedure.

QUESTION: 095 (1.00)

During operation at 100% power, a plant operator on rounds discovers an RHR system manual valve to be out of its normal position.

In accordance with AP-4.0, Administration of Operations, select the ONE statement below which correctly describes the action to be taken.

a. Immediately alter the situation and notify security.

b. Alter the situation and immediately notify the SSS.

c. Do not alter the situation and immediately notify the SSS.

d. Inform the CSO of the situation and state you will correct it in accordance with the procedure.

QUESTION: 096 (1.00)

In accordance with AP-3.2.2, Radiation Work Permit, select the ONE statement below that requires the issuance of an RWP.

a. Entry into an area which has a general area reading of 80 mrem/hour.

b. Entry into an area with contamination levels of 8,500 dpm/100cm2.

c. Entry into an area where it is possible to receive a neutron radiation exposure of 3.0 mrem/hour.

d. Use of a vacuum cleaner in a location with a contamination level of 250 dpm/100cm2.

QUESTION: 097 (1.00)

In accordance with AP-6.1, Control of Equipment Temporary Modifications, select the ONE statement below that is correct concerning the procedure utilized to defeat an annunciator window.

a. If required due to a malfunctioning component (pressure switch) in the annunciator circuit, a temporary modification tag is attached to that component.

b. All annunciators defeated with temporary modifications are identified with a temporary modification tag in the affected window.

c. The lifted lead and jumper log is used to log all annunciators defeated with temporary modifications.

d. A sticker attached to the annunciator window is used to identify defeated annunciators.

QUESTION: 098 (1.00)

In accordance with AP-4.2, Control of Equipment Markups, select the ONE statement below that correctly describes the requirement(s) for independent verification when removing or installing a Markup.

a. The Fire Chief must perform the independent verification if it involves the fire protection system.

b. A NRC Licensed Operator must always perform certain independent verifications.

c. A qualified, Non-Licensed Operator may perform the independent verification.

d. A NRC Senior Licensed Operator must perform the independent verification for controls located in the control room.

QUESTION: 099 (1.00)

In accordance with AP-4.2, Control of Equipment Markups and N2-ODI-5.06, Markups, select the ONE statement below that correctly describes the proper utilization of Markups.

a. A Blue Markup may be used to replace a valve seat assembly if a post repair leak test is required.

b. A Blue Markup may be used in conjunction with a Hold-Out card to allow testing while performing maintenance.

c. The Blue Markup man must be a Niagara Mohawk employee.

d. A Blue Markup used in conjunction with a Red Markup allows operation of equipment for testing before completion of the work.

QUESTION: 100 (1.00)

Federal Regulations will allow a 25 year old radiation worker with a current Form NRC-4 and a previous lifetime whole body exposure of 26 Rem to receive a MAXIMUM of (SELECT ONE) rem/calender quarter for the coming year. (Assume the worker's birthday is today.)

a. 3 rem/quarter for the entire year.

b. 3 rem/quarter not to exceed 5 rem total for the year.

c. 1.25 rem/quarter for the entire year.

d. 3 rem/quarter for 3 quarters in the year.

(********** END OF EXAMINATION **********)

ANSWER: 001 (1.00)

d.

REFERENCE:

NMP2: N2-OLT-7 p4
NMP2: Simulator Malfunction RD 15
NMP2: Simulator L.P.6 EO-4.5e
KA: 201001A207 [3.2/3.1]
201001A207 ..(KA's)

ANSWER: 002 (1.00)

a.

REFERENCE:

NMP2: Simulator MALF RD15
NMP2: Simulator L.P.6 EO 2.1-201.12
KA: 201001K603 [3.0/2.9]
201001K603 ..(KA's)

ANSWER: 003 (1.00)

d.

REFERENCE:

NMP2: N2-OLT-31 p8
NMP2: N2-OLT-31 LO 31-2
KA: 201006G004 [3.4/3.4]

201006G004 ..(KA's)

ANSWER: 004 (1.00)

a.

REFERENCE:

NMP2: N2-OLT-31 p9
NMP2: N2-OLT-31 31-5a,c
KA: 201006K402 [3.5/3.5]
201006K402 ..(KA's)

ANSWER: 005 (1.00)

b.

REFERENCE:

NMP2: N2-OLT-05 p13
NMP2: N2-OLT-05 LO 5-5c
KA: 202001A102 [3.4/3.4] 202001A103 [3.6/3.6]
202001A404 [3.7/3.7]
202001A102 202001A103 202001A404 ..(KA's)

ANSWER: 006 (1.00)

c.

REFERENCE:

NMP2: N2-OLT-8 FIG. 6
NMP2: N2-OLT-8 LO 8.4f
KA: 202001A210 [3.5/3.9]
202001A210 ..(KA's)

ANSWER: 007 (1.00)

b.

REFERENCE:

NMP2: N2-OLP-58 p10
NMP2: N2-OLP-58 LO 58-8
KA: 202001A222 [3.1/3.2] 203000K116 [3.1/3.2]
233000K109 [2.6/2.6]
202001A222 203000K116 233000K109 ..(KA's)

ANSWER: 008 (1.00)

d.

REFERENCE:

NMP2: N2-OLT-8 p9
NMP2: N2-OLT-8 LO 8.9
KA: 202001K410 [3.3/3.4] 202001A401 [3.7/3.7]
202001K410 202001A401 ..(KA's)

ANSWER: 009 (1.00)

c.

REFERENCE:

NMP2: N2-OLT-9 p10
NMP2: N2-OLT-9 9-6d
KA: 202002K101 [3.5/3.6]
202002K101 ..(KA's)

ANSWER: 010 (1.00)

c.

REFERENCE:

NMP2: N2-OLT-15 p12
NMP2: N2-OLT-15 LO 15-7a
KA: 203000K401 [4.2/4.2] 203000A302 [4.2/3.9]
203000K401 203000A302 ..(KA's)

ANSWER: 011 (1.00)

d.

REFERENCE:

NMP2: N2-OLT-10 p7,8
NMP2: N2-OLT-10 LO 10-6
KA: 204000K404 [3.5/3.6]
204000K404 ..(KA's)

ANSWER: 012 (1.00)

a.

REFERENCE:

NMP2: N2-OLT-15 p9
NMP2: none
KA: 205000K403 [3.8/3.8] 205000K502 [2.8/2.9]
205000K403 205000K502 ..(KA's)

ANSWER: 013 (1.00)

b.

REFERENCE:

NMP2: N2-OLT-14 p7
NMP2: N2-OLT-14 LO 14-5a
KA: 209001K408 [3.8/4.0] 209001A108 [3.3/3.2]
209001A402 [3.5/3.4]
209001K408 209001A108 209001A402 ..(KA's)

ANSWER: 014 (1.00)

d.

REFERENCE:

NMP2: N2-OLT-12 P.9
NMP2: N2-OLT-12 LO 12-6
KA: 209002K303 [3.9/3.9]
209002K303 ..(KA's)

ANSWER: 015 (1.00)

b.

REFERENCE:

NMP2: N2-OLT-34 p9
NMP2: N2-OLT-34 LO 34-9
NMP2: N2-OLT-33 p5
KA: 211000K407 [3.8/3.9] 211000A109 [4.0/4.1]6
211000K407 211000A109 ..(KA's)

ANSWER: 016 (1.00)

c.

REFERENCE:

NMP2: N2-OLT-35 p6
NMP2: none
KA: 212000K306 [4.0/4.1]
212000K306 ..(KA's)

ANSWER: 017 (1.00)

b.

REFERENCE:

NMP2: N2-OLT-33 p8
NMP2: N2-OLT-33 LO 33-2
KA: 212000K409 [3.8/3.9] 202001K414 [4.0/4.1]
202001K506 [3.6/3.7] 211000A308 [4.2/4.2]
212000K409 202001K414 202001K506 ..(KA's)

ANSWER: 018 (1.00)

c.

REFERENCE:

NMP2: N2-OLT-30 p7
NMP2: N2-OLT-30 LO 30-3
KA: 215001K401 [3.4/3.5]
215001K401 ..(KA's)

ANSWER: 019 (1.00)

d.

REFERENCE:

NMP2: N2-OLT-32 p8
NMP2: N2-OLP-32 LO 32-3a
KA: 215002K401 [2.9/3.0]
215002K401 ..(KA's)

ANSWER: 020 (1.00)

a.

REFERENCE:

NMP2: N2-OLT-27 p9
NMP2: N2-OLT-27 LO 27-6
KA: 215003K401 [3.7/3.7] 215003K402 [4.0/4.0]
215003K101 [3.9/3.9] 215003K102 [3.6/3.6]
215003K102 215003K402 215003K101 215003K401 ..(KA's)

ANSWER: 021 (1.00)

d.

REFERENCE:

NMP2: N2-OLT-27 p6,9
NMP2: N2-OLT-27 LO 27-6
KA: 215003K401 [3.7/3.7]
215003K401 ..(KA's)

ANSWER: 022 (1.00)

a.

REFERENCE:

NMP2: N2-OLT-26 p13
NMP2: N2-OLT-26 LO 26-8
KA: 215004K401 [3.7/3.7] 215004K402 [3.4/3.5]
215004K401 215004K402 ..(KA's)

ANSWER: 023 (1.00)

d.

REFERENCE:

NMP2: N2-OLT-68 p5
NMP2: N2-OLT-68 LO-68-3
KA: 263000K303 [3.4/3.8] 215003K602 [3.6/3.8]
215004K602 [3.1/3.3]

215004K602 263000K303 215003K602 ..(KA's)

ANSWER: 024 (1.00)

a.

REFERENCE:

NMP2: N2-OLT-29 p5
NMP2: N2-OLT-29 LO 29-3-5
KA: 215005A104 [4.1/4.1]
215005A104 ..(KA's)

ANSWER: 025 (1.00)

d.

REFERENCE:

NMP2: N2-OLT-29 p4
NMP2: N2-OLT-29 LO 29-3-2
KA: 215005K116 [3.3/3.4] 215005K407 [3.7/3.7]
215005K116 215005K407 ..(KA's)

ANSWER: 026 (1.00)

d.

REFERENCE:

NMP2: N2-OLP-05 p17
NMP2: N2-OLP-05 LO 5-8
KA: 216000K506 [3.4/3.6] 216000K507 [3.6/3.8]
216000A203 [3.0/3.1]
216000K506 216000K507 216000A203 ..(KA's)

ANSWER: 027 (1.00)

d.

REFERENCE:

NMP2: N2-OLT-16 p12
NMP2: N2-OLT-16 LO 16-4
KA: 217000A301
217000A301 ..(KA's)

ANSWER: 028 (1.00)

a.

REFERENCE:

NMP2: N2-OLT-16 p15
NMP2: N2-OLT-16 LO 16-5
KA: 217000G007 [3.8/3.7]

217000G007 ..(KA's)

ANSWER: 029 (1.00)

d.

REFERENCE:

NMP2: N2-OLT-36 p6
NMP2: N2-OLT-36 LO 36-5,6
KA: 218000K105 [3.9/3.9] 218000K106 [3.9/3.9]
218000K105 218000K106 ..(KA's)

ANSWER: 030 (1.00)

b.

REFERENCE:

NMP2: N2-OLT-13 p6
NMP2: N2-OLT-13 LO 13-6
KA: 218000K403 [3.8/4.0] 218000K501 [3.8/3.8]
218000K501 218000K403 ..(KA's)

ANSWER: 031 (1.00)

c.

REFERENCE:

NMP2: N2-OLT-15 p13
NMP2: N2-OLT-15 LO 15-8d
KA: 219000A402 [3.7/3.5] 219000G009 [4.2/3.8]
219000A402 219000G009 ..(KA's)

ANSWER: 032 (1.00)

c.

REFERENCE:

NMP2: N2-OLT-21 p26
NMP2: N2-OLT-21 LO 21-4a,b
KA: 223002K111 [2.9/3.2] 223002A102 [3.7/3.7]
223002K111 223002A102 ..(KA's)

ANSWER: 033 (1.00)

b.

REFERENCE:

NMP2: N2-OLT-21 p6
NMP2: N2-OLT-21 LO 21-4c
KA: 223002K404 [3.2/3.6]
223002K404 ..(KA's)

ANSWER: 034 (1.00)

b.

REFERENCE:

NMP2: N2-OLT-21 Table 1
NMP2: N2-OLT-21 LO 21-2ab
KA: 223002A102 [3.7/3.7] 223002A209 [3.6/3.7]
223002G011 [3.4/4.1]
223002A102 223002A209 223002G011 ..(KA's)

ANSWER: 035 (1.00)

b.

REFERENCE:

NMP2: N2-OLT-2 p13
NMP2: N2-OLT-2 LO 2-5,6
KA: 234000K502 [3.1/3.7]
234000K502 ..(KA's)

ANSWER: 036 (1.00)

a. or d

REFERENCE:

NMP2: N2-OLT-35 p7
NMP2: N2-OLT-35 LO 5-d
KA: 239001K127 [4.0/4.1]
239001K127 ..(KA's)

ANSWER: 037 (1.00)

c.

REFERENCE:

NMP2: N2-OLT-38 p3
NMP2: N2-OLT-38 LO 38-2c
KA: 239002A109 [3.1/3.3]
239002A109 ..(KA's)

ANSWER: 038 (1.00)

d.

REFERENCE:

NMP2: N2-OLT-44 FIG 4
NMP2: N2-OLT-44 LO-44-6
NMP2: NMP2 Malfunction TCO2
KA: 241000K302 [4.2/4.3] 241000A201 [3.5/3.7]
241000K302 241000A201 ..(KA's)

ANSWER: 039 (1.00)

d.

REFERENCE:

NMP2: N2-OLT-44 p3
NMP2: N2-OLT-44 LO 44-5f
KA: 241000K405 [3.7/3.8]
241000K405 ..(KA's)

ANSWER: 040 (1.00)

c.

REFERENCE:

NMP2: N2-OLT-49 LO 49-3
NMP2: N2-OP-3 p52
KA: 256000K401 [3.4/3.4]
256000K401 ..(KA's)

ANSWER: 041 (1.00)

d.

REFERENCE:

NMP2: N2-OLT-54 p5
NMP2: N2-OLT-54 LO 54-5a
KA: 259001K301 [3.9/3.9]
259001K301 ..(KA's)

ANSWER: 042 (1.00)

b.

REFERENCE:

NMP2: N2-OLT-24 p7
NMP2: N2-OLT-24 LO 24-5
KA: 261000K401 [3.7/3.8]
261000K401 ..(KA's)

ANSWER: 043 (1.00)

b.

REFERENCE:

NMP2: N2-OLT-67 FIG.1
NMP2: N2-OLT-67 LO 67-4
KA: 262001K301 [3.5/3.7] 262001G004 [3.3/3.5]
262001K301 262001G004 ..(KA's)

ANSWER: 044 (1.00)

b.

REFERENCE:

NMP2: N2-OLT-66 p33
NMP2: N2-OLT-66 LO 66-8
KA: 262001K104 [3.1/3.4] 262001K304 [3.1/3.3]
262001K104 262001K304 ..(KA's)

ANSWER: 045 (1.00)

c.

REFERENCE:

NMP2: N2-OLT-67 p2
NMP2: N2-OLT-67 LO 67-6a,b
KA: 262001K602 [3.6/3.9]
262001K602 ..(KA's)

ANSWER: 046 (1.00)

b.

REFERENCE:

NMP2: N2-OLT-17 p14
NMP2: N2-OLT-17 17-3b
KA: 264000K402 [4.0/4.2]
264000K402 ..(KA's)

ANSWER: 047 (1.00)

d.

REFERENCE:

NMP2: N2-OLT-35 p20
NMP2: N2-OLT-35 LO35-5a
KA: 272000A301 [3.8/3.9]
272000A301 ..(KA's)

ANSWER: 048 (1.00)

b.

REFERENCE:

NMP2: N2-OLT-62 p9
NMP2: N2-OLT-62 LO 62-4
NMP2: N2-OP-42 p84
KA: 272000K102 [3.2/3.5]
272000K102 ..(KA's)

ANSWER: 049 (1.00)

d.

REFERENCE:

NMP2: N2-OLT-75 p9
NMP2: N2-OLT-75 LO-75-8a,b,c
KA: 286000K402 [3.3/3.5]
286000K402 ..(KA's)

ANSWER: 050 (1.00)

c.

REFERENCE:

NMP2: N2-OLT-71 p8
NMP2: N2-OLT-71 LO 71-5d
KA: 288000K103 [3.7/3.7] 288000K103 [3.3/3.6]
288000K401 [3.7/3.9] 288000A204 [3.7/3.8]
288000K103 ..(KA's)

ANSWER: 051 (1.00)

b.

REFERENCE:

NMP2: N2-OLT-3 p14
NMP2: N2-OLT-3 LO 3-2k
KA: 290002K403 [3.2/3.3]
290002K403 ..(KA's)

ANSWER: 052 (1.00)

b.

REFERENCE:

NMP2: N2-OP-101D, p10
NMP2: none
KA: 295001A201 [3.5/3.8]
295001A201 ..(KA's)

ANSWER: 053 (1.00)

a.

REFERENCE:

NMP2: SIMULATOR MALF. RR 18
NMP2: SIMULATOR LP 5, EO-1.3d
KA: 295001A205 [3.1/3.4]
295001A205 ..(KA's)

ANSWER: 054 (1.00)

d.

REFERENCE:

NMP2: N2-OP-9 Sect. H 2.0
NMP2: N2-OLT-35, LO 35-5
KA: 295002K202 [3.1/3.2]
295002K202 ..(KA's)

ANSWER: 055 (1.00)

a.

REFERENCE:

NMP2: N2-OLT-67, p2
NMP2: N2-OLT-67, LO 67-6
KA: 295003K301 [3.3/3.5]
295003K301 ..(KA's)

ANSWER: 056 (1.00)

d.

REFERENCE:

NMP2: N2-OP-74A Sect. H 5.2
NMP2: N2-OP-101D Sect. H 2.1
KA: 295004K303 [3.1/3.5]
295004K303 ..(KA's)

ANSWER: 057 (1.00)

b. (no change)

REFERENCE:

NMP2: N2-OLT-35, p17
NMP2: T.S. Bases 3.3.4
NMP2: N2-OLT-08, LO 8.12
KA: 295005K203 [3.2/3.3]
295005K203 ..(KA's)

ANSWER: 058 (1.00)

c.

REFERENCE:

NMP2: RPV Control N2-EOP-RPV
NMP2: N2-OLP-RP, EO-3
KA: 295006K101 [3.7/3.9]
295006K101 ..(KA's)

ANSWER: 059 (1.00)

a.

REFERENCE:

NMP2: N2-OLP-15, p14
NMP2: N2-OLP-15, LO 15-6
KA: 295007K205 [2.9/3.1]
295007K205 ..(KA's)

ANSWER: 060 (1.00)

a.

REFERENCE:

NMP2: N2-OLT-05, p27
NMP2: N2-OLT-05, LO 5.3c
KA: 295008A108 [3.5/3.5]
295008A108 ..(KA's)

ANSWER: 061 (1.00)

d.

REFERENCE:

NMP2: LOT-001-216-2-01, p25
NMP2: N2-EOP-RPV Sect. RL
NMP2: N2-OLP-05, LO 5.8
KA: 295009K201 [3.9/4.0]
295009K201 ..(KA's)

ANSWER: 062 (1.00)

a.

REFERENCE:

NMP2: N2-EOP-RPV
NMP2: N2-OLP-RL, EO-2
KA: 295009G011 [4.3/4.5]
295009G011 ..(KA's)

ANSWER: 063 (1.00)

c.

REFERENCE:

NMP2: N2-OP-13 Step H.2.0
NMP2: N2-OLT-20, LO 20-5
KA: 295012A102 [3.8/3.8]
295012A102 ..(KA's)

ANSWER: 064 (1.00)

d.

REFERENCE:

NMP2: N2-EOP-PC
NMP2: N2-OLP-SPT, EO-3
KA: 295013K302 [3.6/3.8]
295013K302 ..(KA's)

ANSWER: 065 (1.00)

a.

REFERENCE:

NMP2: N2-OLP-2, p21
NMP2: N2-OLP-2, LO 2-7
KA: 295014K103 [3.7/4.0]
295014K103 ..(KA's)

ANSWER: 066 (1.00)

c.

REFERENCE:

NMP2: N2-OP-97, Sect. H2
NMP2: N2-OLP-RQ, EO-3
KA: 295015K207 [3.3/3.4]
295015K207 ..(KA's)

ANSWER: 067 (1.00)

c.

REFERENCE:

NMP2: N2-OP-97 Sect. H 2.
NMP2: N2-OLP-RQ, EO-3
KA: 295015K301 [3.4/3.7]
295015K301 ..(KA's)

ANSWER: 068 (1.00)

b.

REFERENCE:

NMP2: N2-OP-78 p5
NMP2: none
KA: 295016A107 [4.2/4.3]
295016A107 ..(KA's)

ANSWER: 069 (1.00)

b.

REFERENCE:

NMP2: N2-OP-78 Precaution 6.0
NMP2: N2-OLP-36, LO 36-6
KA: 295016K201 [4.4/4.5]
295016K201 ..(KA's)

ANSWER: 070 (1.00)

d.

REFERENCE:

NMP2: N2-EOP-SC
NMP2: N2-OLP-RR, EO-3
KA: 295017K301 [3.6/3.9]
295017K301 ..(KA's)

ANSWER: 071 (1.00)

c.

REFERENCE:

NMP2: N2-OP-13 Sect. H.1.2
NMP2: N2-OLT-58, LO 58-5
KA: 295018K202 [3.4/3.6]
295018K202 ..(KA's)

ANSWER: 072 (1.00)

d.

REFERENCE:

NMP2: N2-OP-19 Sect. H.2.1
NMP2: N2-OLT-60, LO 60-4
KA: 295019A104 [3.3/3.2]
295019A104 ..(KA's)

ANSWER: 073 (1.00)

b.

REFERENCE:

NMP2: N2-OLT-21, p19, Note 4
NMP2: N2-OLT-21, LO 21-4
KA: 295020A206 [3.4/3.8]
295020A206 ..(KA's)

ANSWER: 074 (1.00)

a.

REFERENCE:

NMP2: N2-OP-31, Sect. H.10.39
NMP2: N2-OLP-15, LO 15-9
KA: 295021A104 [3.7/3.7]
295021A104 ..(KA's)

ANSWER: 075 (1.00)

a.

REFERENCE:

NMP2: N2-OP-31, Sect. H.10.0, p49
NMP2: N2-OLP-15, LO 15-9
KA: 295021K104 [3.6/3.7]

295021K104 ..(KA's)

ANSWER: 076 (1.00)

d.

REFERENCE:

NMP2: N2-OP-30, page 20 Sect. H.1
NMP2: N2-OLT-7, LO 7-6
KA: 295022K101 [3.3/3.4]
295022K101 ..(KA's)

ANSWER: 077 (1.00)

b.

REFERENCE:

NMP2: T.S. p B3/4 9-2
NMP2: none
KA: 295023K101 [3.6/4.1] 295023G004 [2.7/3.8]
295023K101 295023G004 ..(KA's)

ANSWER: 078 (1.00)

b.

REFERENCE:

NMP2: N2-OP-33-2, p2
NMP2: N2-OLT-12, LO 12-4
KA: 295024K202 [3.7/3.7]
295024K202 ..(KA's)

ANSWER: 079 (1.00)

c.

REFERENCE:

NMP2: N2-OP-61A Caution, p25
NMP2: N2-OLP-PCP, EO-3
KA: 295024K307 [3.5/4.0]
295024K307 ..(KA's)

ANSWER: 080 (1.00)

c.

REFERENCE:

NMP2: N2-OLP-DWT, p9
NMP2: N2-OLP-DWT, EO-3
KA: 295028K303 [3.6/3.9]
295028K303 ..(KA's)

ANSWER: 081 (1.00)

c.

REFERENCE:

NMP2: N2-OLP-C2 p6
NMP2: N2-OLP-C2 EO 3
KA: 295030K208 [3.5/3.8]
295030K208 ..(KA's)

ANSWER: 082 (1.00)

a.

REFERENCE:

NMP2: N2-EOP-RPV
NMP2: N2-OLP-RL, EO-1
KA: 295031G010 [4.0/3.8]

295031G010 ..(KA's)

ANSWER: 083 (1.00)

d.

REFERENCE:

NMP2: N2-EOP-PC
NMP2: N2-OLP-SPL, p5
NMP2: N2-OPL-SPL, EO-2
KA: 295030G011 [4.3/4.5]
295030G011 ..(KA's)

ANSWER: 084 (1.00)

b.

REFERENCE:

NMP2: N2-OLP-C7, p8
NMP2: N2-OLP-C7, EO-3
KA: 295031K103 [3.7/4.1]
295031K103 ..(KA's)

ANSWER: 085 (1.00)

c.

REFERENCE:

NMP2: N2-OLP-SCT, p7
NMP2: N2-OLP-SCT, EO3
KA: 295035K202 [3.6/3.8]
295035K202 ..(KA's)

ANSWER: 086 (1.00)

a.

REFERENCE:

NMP2: N2-OLP-RQ, p9
NMP2: N2-OLP-RQ, EO-3
KA: 295037K301 [4.1/4.2]
295037K301 ..(KA's)

ANSWER: 087 (1.00)

c.

REFERENCE:

NMP2: N2-OLP-RR, p4
NMP2: N2-OLP-RR, EO-3
KA: 295038K301 [3.6/4.5]
295038K301 ..(KA's)

ANSWER: 088 (1.00)

b.

REFERENCE:

NMP2: AP-3.1 Sect. 6.3
NMP2: none
KA: 294001K105 [3.2/3.7]
294001K105 ..(KA's)

ANSWER: 089 (1.00)

c.

REFERENCE:

NMP2: N2-ODI-5.11 Sections 3.2 & 3.3
NMP2: none
KA: 294001K107 [3.3/3.6]
294001K107 ..(KA's)

ANSWER: 090 (1.00)

a.

REFERENCE:

NMP2: Station General Order 88-6, p9
NMP2: none
KA: 294001K108 [3.1/3.4]
294001K108 ..(KA's)

ANSWER: 091 (1.00)

a.

REFERENCE:

NMP2: N2-ODI-1.06, Sect. 3.2
NMP2: none
KA: 294001A104 [3.1/3.2]
294001A104 ..(KA's)

ANSWER: 092 (1.00)

d.

REFERENCE:

NMP2: N2-ODI-1.06, Sect. 5.0
NMP2: LOT-006-343-2-05, EO-9
KA: 294001A105 [3.4/3.5]
294001A105 ..(KA's)

ANSWER: 093 (1.00)

d.

REFERENCE:

NMP2: LOT-006-343-2-05, p30,33
NMP2: AP-4.0, p24,25
NMP2: LOT-006-343-2-05, EO-14
KA: 294001A106 [3.4/3.6]
294001A106 ..(KA's)

ANSWER: 094 (1.00)

a.

REFERENCE:

NMP2: LOT-006-343-2-05, p22
NMP2: AP-4.0, p18
NMP2: LOT-006-343-2-05, EO-2
KA: 294001A102 [4.2/4.2]
294001A102 ..(KA's)

ANSWER: 095 (1.00)

c.

REFERENCE:

NMP2: LOT-006-343-2-05, p26
NMP2: AP-4.0, p20
NMP2: LOT-006-343-2-05, EO-10
KA: 294001A113 [4.5/4.3]
294001A113 ..(KA's)

ANSWER: 096 (1.00)

c.

REFERENCE:

NMP2: LOT-006-343-2-11, p10,
NMP2: AP-3.2.2, p7,8
NMP2: LOT-006-343-2-11, EO-3
KA: 294001K103 [3.3/3.8]
294001K103 ..(KA's)

ANSWER: 097 (1.00)

d.

REFERENCE:

NMP2: LOT-006-343-2-07, p18
NMP2: AP-6.1, p12
NMP2: LOT-006-343-2-07, EO-8
KA: 294001K102 [3.9/4.5]
294001K102 ..(KA's)

ANSWER: 098 (1.00)

b.

REFERENCE:

NMP2: AP-4.2 Sect. 6.2
NMP2: LOT-006-343-2-06, EO-7
KA: 294001K101 [3.7/3.7]
294001K101 ..(KA's)

ANSWER: 099 (1.00)

c.

REFERENCE:

NMP2: AP-4.2 Sect. 4.0
NMP2: LOT-006-343-2-06, EO-10, EO-1.0a
KA: 294001K102 [3.9/4.5]
294001K102 ..(KA's)

ANSWER: 100 (1.00)

d.

REFERENCE:

NMP2: AP-3.3 Sect. 6.5.1
NMP2: LOT-006-343-2-10, TO-1
KA: 294001K103 [3.3/3.8]
294001K103 ..(KA's)

(********** END OF EXAMINATION **********)

ATTACHMENT 3
Facility Comments on Written Examination

NIAGARA MOHAWK

NMP-67500

NINE MILE POINT NUCLEAR STATION / P.O. BOX 32 LYCOMING, NEW YORK 13093 / TELEPHONE (315) 343-2110

August 28, 1990

Mr. Timothy Martin
Regional Administrator
ATTN: Mr. Robert M. Gallo
Branch Chief
United States Nuclear Regulatory Commission
Region I
475 Allendale Road
King of Prussia, PA 19406

Dear Mr. Martin:

This letter concerns the NRC Hot License written examinations administered to three (3) Nine Mile Point Unit 2 Reactor Operator candidates and seven (7) Nine Mile Point Unit #2 Senior Reactor Operator candidates on August 20, 1990. Mr. Nick Conicella of Region I was lead examiner and was assisted by Ms. Tracy Walker and Mr. Sam Hansen.

We felt that this exam was very comprehensive and well written and that in most cases the questions and answer key accurately reflected the training material and plant procedures cited as references. Please see the enclosed attachments for our exam comments. Attachment 1 contains the RO exam comments and Attachment 2 contains the SRO exam comments.

We appreciate the efforts of Mr. Conicella, Ms. Walker, and Mr. Hansen for ensuring that this examination was conducted in a very professional manner.

Please feel free to contact me if you need additional information.

Very truly yours,

Joseph F. Firlit
Vice President - Nuclear Generation

JFF/JJK/kab

Attachments (2)

ATTACHMENT 1 (RO EXAM COMMENTS)

EXAM COMMENT #1:

A. QUESTION: 036 (1.00)

With the reactor operating at 35% power, which one of the following combinations of Turbine Stop Valves, if closed, would cause a half scram?

a. SVOs 1 and 2

b. SVOs 2 and 3

c. SVOs 1 and 4

d. SVOs 1, 2, and 4

ANSWER: 036 (1.00)

a. SVOs 1 and 2

Reference:

NMP2: N2-OLT-35 P7
NMP2: N2-OLL-35 LO 5-d
K/A: 239001K127 [4.0/4.1]
239001K127 ..(KA's)

B. FACILITY COMMENT/RECOMMENDATION

an acceptable additional answer could be choice d, since if SVOs 1 and 2 cause a half scram, then SVOs 1, 2, and 4 would also cause a half scram and also a full scram.

C. REFERENCE:

1. NMP-2: N2-OLT-35

ATTACHMENT 1

EXAM COMMENT #2

A. QUESTION: 057 (1.00)

Select the ONE statement below that correctly describes the expected automatic response of the reactor recirc. pumps as a result of a main turbine trip?

a. Recirc. pumps trip to off if operating in fast regardless of the initial power level.

b. Recirc. pumps trip to low speed if operating in fast only if the reactor power is initially above 30%.

c. Recirc. pumps trip to low speed if operating in fast regardless of the initial reactor power.

d. Recirc. pumps trip to off if operating in low speed if reactor power is initially above 30%.

ANSWER: 057 (1.00)

b. Recirc. pumps trip to low speed if operating in fast only if the reactor power is initially above 30%.

Reference:

NMP2: N2-OLT-35, p. 17
NMP2: T.S. Bases 3.3.4
NMP2: N2-OLT-08, LO 8.12
K/A: 295005K203 [3.2/3.3]
295005K203 ..(K/A's)

ATTACHMENT 1

B. FACILITY COMMENT/RECOMMENDATION

An acceptable additional answer could be choice c because if the recirc. pump is operating in fast speed as stated in choice c then reactor power must be assumed to be greater than 30% because the recirc. pumps are interlocked to prevent operation in fast speed when reactor power is less than 30%, and answer c states: Recirc. pumps trip to low speed <u>if operating in fast</u> regardless of initial reactor power.

C. REFERENCES: NMP2: N2-OLT-8 p. 9

EXAM COMMENT #3

A. QUESTION: 047

Select the ONE statement below that correctly describes the expected automatic response of the reactor recirc. pumps as a result of a main turbine trip?

a. Recirc. pumps trip to off if operating in fast regardless of the initial power level.

b. Recirc. pumps trip to low speed if operating in fast only if the reactor power is initially above 30%.

c. Recirc. pumps trip to low speed if operating in fast regardless of the initial reactor power.

d. Recirc. pumps trip to off if operating in low speed if reactor power is initially above 30%.

ANSWER: 057 (1.00)

b. Recirc. pumps trip to low speed if operating in fast only if the reactor power is initially above 30%.

Reference:

NMP2: N2-OLT-35, p. 17
NMP2: T.S. Bases 3.3.4
NMP2: N2-OLT-08, LO 8.12
K/A: 295005K203 [3.2/3.3]
295005K203 ..(K/A's)

B. FACILITY COMMENT/RECOMMENDATION

An acceptable additional answer could be choice c because if the recirc. pump is operating in fast speed as stated in choice c then reactor power must be assumed to be greater than 30% because the recirc. pumps are interlocked to prevent operation in fast speed when reactor power is less than 30%, and answer c states: "Recirc. pumps trip to low speed <u>if operating in fast</u> regardless of initial reactor power.

C. REFERENCES: NMP2: N2-OLT-8 p. 9

ATTACHMENT 4

NRC RESPONSE TO FACILITY COMMENTS

RO Question 36: Comment ACCEPTED: The answer key was changed to accept both choices 'a' and 'd' as the correct answers.

RO Question 57: Comment NOT ACCEPTED: The answer key was not changed and the correct answer remains choice 'b'. Choice 'c' states, "Recirc. pumps trip to low speed if operating in fast regardless of the initial power level." This cannot be a correct answer because of the interlock which prevents operation in fast speed below 30% power. Therefore, the "regardless of the initial power level" portion of choice 'c' makes choice 'c' incorrect. Additionally, the correct answer, choice 'b' states, "Recirc. pumps trip to low speed if operating in fast only if reactor power is initially above 30%." The "initially above 30%" portion of choice 'b' clearly distinguishes choice 'b' from choice 'c' which states, "regardless of the initial power level."

SRO Question 47: (see RO Question 57)

ATTACHMENT 5

SIMULATION FACILITY REPORT

Facility Licensee: Niagara Mohawk Power Corporation

Facility Name: Nine Mile Point Nuclear Station, Unit 2

Facility Docket Nos.: 50-410

Operating Tests Administered on: August 21-24, 1990

This form is to be used only to report observations. These observations do not constitute audit or inspection findings and are not, without further verification and review, indicative of non-compliance with 10 CFR 55.45(b). These observations do not affect NRC certification or approval of the simulation facility other than to provide information which may be used in future evaluations. No licensee action is required in response to these observations.

During the preparation and administration of the operating tests, the following items were observed:

ITEM	DESCRIPTION
1.)	A spurious loss of 115 KV line #5 occurred (SWG-001) when a fault developed on Division II 125 VDC emergency bus.
2.)	During a scenario setup, a spurious isolation of the 'A' feedwater heater string occurred with no annunciators in alarm.
3.)	The computer point for the LPCS pump breaker indicated OPEN when it was CLOSED.
4.)	Service water flow to the 'B' RHR heat exchanger indicator (E12-R602B) failed when a loss of Division I 125 VDC occurred.
5.)	Motor overloads occurred on all Division I unit coolers when a loss of Division III 600 VAC occurred.
6.)	APRM AGAFs were out of specification at the start of several scenarios.
7.)	Reactor recirculation pump breaker 4B did not trip when a loss of Division II 125 VDC occurred.
8.)	Meteorological tower normal windspeed recorder output does not match the indicator output.
9.)	Meteorological tower backup windspeed recorder had the incorrect chart paper installed.