ROCHESTER GAS AND ELECTRIC CORPORATION

1989 ANNUAL REPORT

RG&E Service Area/Business

The Company supplies electric and gas service wholly within the State of New York, and is engaged in the production, transmission, distribution and sale of these services in a nine-county area centering around the City of Rochester.

The Company's territory, which has a population of approximately 900,000, is well diversified among residential, commercial and industrial consumers. In addition to the City of Rochester, which is the third largest city and a major industrial center in the State, it includes a large and prosperous farming area.

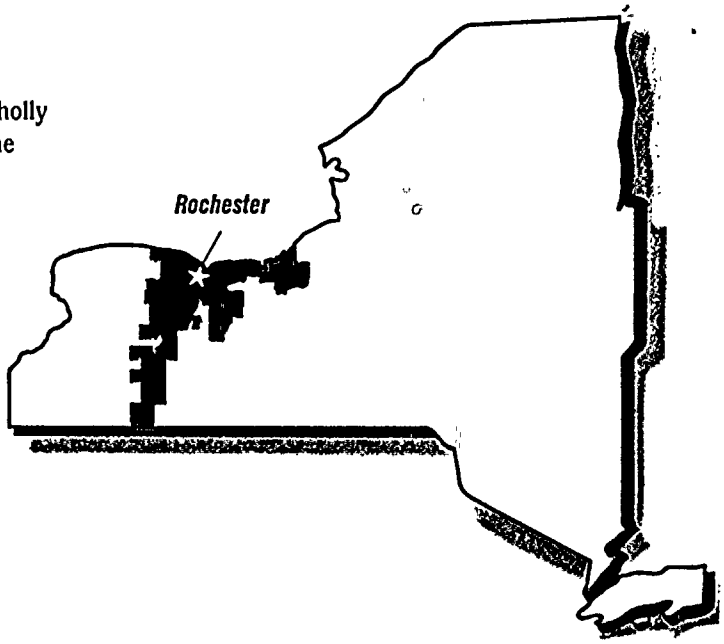

Contents

Shareholder and Investor Relations Information

Inquiries regarding the Company's operations should be directed to David C. Heiligman, Vice President, Secretary and Treasurer of the Company.

Communications regarding changes of address, stock transfers, lost certificates or dividend payments should be directed to Chase Lincoln First Bank, N.A.

Corporate Office
89 East Avenue
Rochester, New York 14649
(716) 546-2700

Annual Meeting
May 16, 1990
At Rochester, New York

Listed
New York Stock Exchange
(Stock Symbol—RGS)

Transfer Agent and Registrar
Chase Lincoln First Bank, N.A.
Corporate Agency Department
Post Office Box 1250
Rochester, New York 14603
(716) 232-5000

Agent for Automatic Dividend Reinvestment and Stock Purchase Plan
(See page 39 for description of plan)
Chase Lincoln First Bank, N.A.
Corporate Agency Department
Post Office Box 1507
Rochester, New York 14603
(716) 232-5000

First Mortgage Bond Trustee and Paying Agent
Bankers Trust Company
Attention: Security Holder Relations
Post Office Box 9006
Church Street Station
New York, New York 10249
(212) 250-6000

Form 10-K Annual Report
The Company will provide, without charge, a copy of the Annual Report on Form 10-K filed with the Securities and Exchange Commission with respect to fiscal year 1989, upon written request of any shareholder addressed to the Secretary.

Where The 1989 Revenue Dollar Came From

- ▲ 1 43¢ Residential (23¢ Electric, 20¢ Gas)
- ▲ 2 24¢ Commercial (18¢ Electric, 6¢ Gas)
- ▲ 3 16¢ Industrial (15¢ Electric, 1¢ Gas)
- ▲ 4 12¢ Other (8¢ Electric, 4¢ Gas)
- ▲ 5 5¢ Electric Sales to Other Utilities

How The 1989 Revenue Dollar Was Used

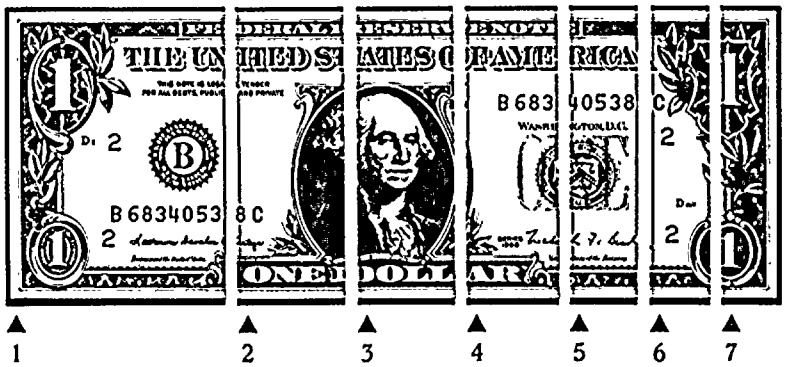

- ▲ 1 32¢ Cost of Fuel (14¢ Electric Fuel and Purchased Electricity, 18¢ Purchased Gas)
- ▲ 2 16¢ Taxes
- ▲ 3 14¢ Other Operations
- ▲ 4 13¢ Wages and Benefits
- ▲ 5 9¢ Depreciation & Amortization
- ▲ 6 8¢ Interest
- ▲ 7 8¢ Dividends & Reinvested Earnings

FINANCIAL HIGHLIGHTS

	1989	1988*	% Change
Financial Data (Dollars in thousands)			
Operating revenues: Electric	$ 581,124	$ 544,603	7
Gas	$ 264,573	$ 231,217	14
Operating expenses	$ 714,464	$ 636,946	12
Operating income	$ 131,233	$ 138,874	(6)
Net income	$ 71,444	$ 76,114	(6)
Earnings applicable to common stock	$ 65,419	$ 68,766	(5)
Rate of return on average common equity**	11.56%	12.68%	(9)
Common Stock Data			
Weighted average number of shares outstanding (thousands)	31,090	30,513	2
Per common share:			
Earnings	$2.10	$2.25	(7)
Dividends	$1.50	$1.50	–
Book Value (year end)	$18.28	$17.69	3
Year-end market price	$21.50	$17.25	25
Shareholders at year end	38,762	41,834	(7)
Operating Data			
Sales (thousands)			
Kilowatt-hours to customers	6,302,901	6,197,117	2
Kilowatt-hours to other utilities	1,255,283	1,149,900	9
Therms of gas sold and transported	507,235	483,766	5
Customers (year end)			
Electric	325,738	321,643	1
Gas	258,280	254,143	2
Construction expenditures, less allowance for funds used during construction (thousands)	$ 120,648	$ 110,587	9
Employees (year end)	2,666	2,600	3

*Operating revenues and expenses reclassified for comparative purposes. (See Note 1 of the Notes to Financial Statements.)

**Excludes net disallowed Nine Mile Two costs of $1.4 million written off in 1989.

TO OUR SHAREHOLDERS

The 1980s brought changes to our business—some welcome, some not. Welcome or not, we closed out the decade with an improving financial condition, with nuclear construction behind us, and write-offs for disallowed nuclear construction expenses apparently complete. We're seeing healthy growth in a solid local economy. We've increased the common stock dividend, we're determined to accomplish ambitious corporate objectives, and ready to meet and take advantage of opportunities often uncovered in the challenges of change. In short, all things considered, we've entered the new decade in good shape.

Revenues and Earnings

Although greater electric and gas sales volumes in 1989 boosted revenues nine percent over 1988, or from $776 million to $846 million, earnings applicable to common stock decreased by five percent, from $68.8 million to $65.4 million. On a per-share basis, earnings declined from $2.25 in 1988 to $2.10 in 1989.

The decline, in the face of higher revenues, results mainly from expenses associated with nuclear power operations. A major in-service inspection of reactor coolant systems was performed at the Ginna plant. Steam generator repairs and other improvements implemented in 1989 resulted in additional expenses for the unit.

Unscheduled shutdowns at the Nine Mile Two nuclear power plant in which we have a 14 percent ownership added to costs and reduced available electric generation.

Retained Earnings and Dividends

Retained earnings grew from $39.7 million in 1988 to $58.0 million in 1989. In December 1989, the board of directors increased the quarterly dividend one and a half cents to 39 cents a share, or $1.56 annually, effective in January 1990. Our intent is to try to achieve annual common stock dividend payments of 8.5 to 9.0 percent of common stock book value.

Sales

Electric kilowatt-hour sales to our customers in 1989 rose 1.7 percent above 1988 sales. Kilowatt-hour sales to other power companies were up 9.2 percent over 1988.

Therm sales of natural gas sold and transported also exceeded forecast and rose 4.9 percent over 1988 levels. The increases were driven somewhat by weather conditions, particularly with the strong sendout month of December 1989 in which our customers faced the coldest December in our service territory's recorded weather history.

But, we don't depend on weather for sales. Healthy economic conditions promote business, industry and housing construction. Increased applications for electric energy in a growing service-oriented economy and strong growth in the number of new customers create additional demand. We added 4,100 electric customers in 1989 and an equal number of gas accounts. In the decade of the 80s we added 39,000 residential electric customers and 55,000 residential gas spaceheating customers.

Electric Operations

The Ginna plant generates half of our own customers' electric requirements and was up and running 75 percent of the time in 1989. That availability level is good and above the national average.

A longer-than-normal scheduled down time for the plant accomplished an important milestone. We completed our second required ten-year inspection and found the 20-year-old plant in sound condition. The "check up" leads us to believe that we can expect many more good years of operation at high availability and capacity levels.

GINNA STATION

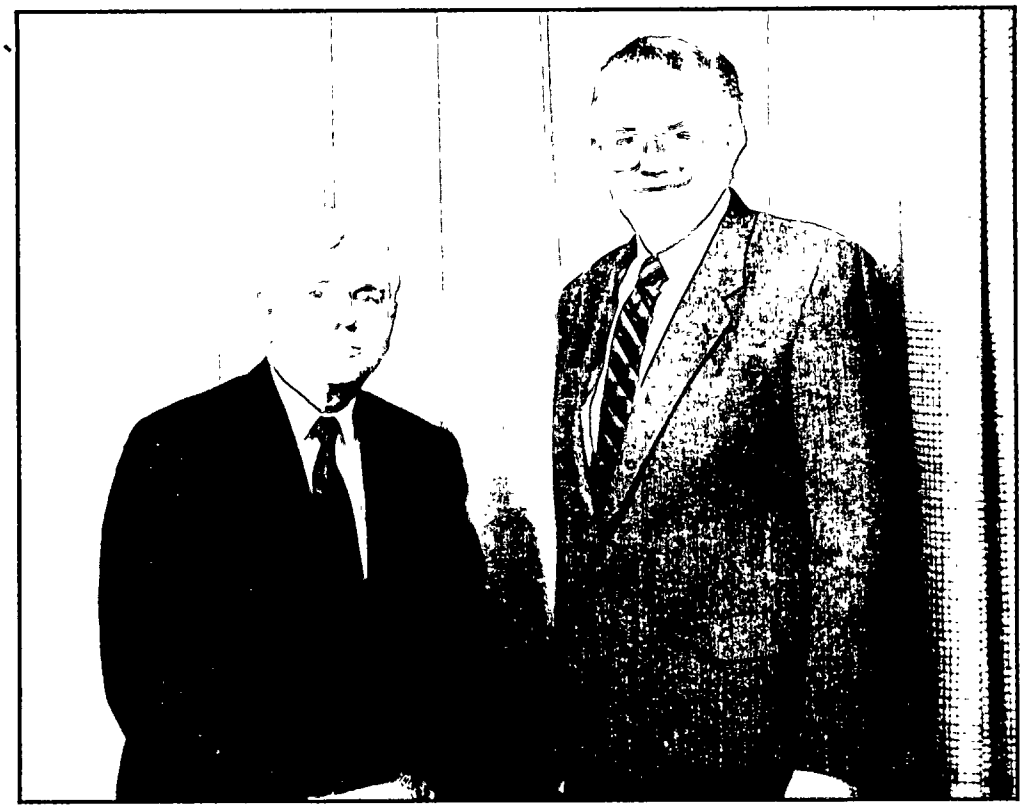

Roger W. Kober (l.) and Harry G. Saddock

We devote considerable resources to the Ginna plant to ensure continued safe and reliable operation. Our commitment to safety and dependability extends to all of our facilities such as our fossil-fired power plants at Russell and Beebee Stations. In 1989 the fossil-fired stations reached 91 percent availability, well above the national average. We are also committing capital to upgrade and improve our electric transmission and distribution systems to retain high reliability and accommodate growth.

Gas Operations

We added to our gas franchise territory in 1989 with an expansion of our system to supply customers in the Livonia area south of Rochester. Prospects for new business in that area are excellent. We are actively marketing natural gas and expect to add 600 gas customers in the new territory over the next five years. As with the electric side of our business, we are committing resources to upgrade our gas delivery system and maintain safe, reliable service.

We are having discussions with Empire State Pipeline relating to its proposed gas pipeline project. The proposed pipeline would stretch some 155 miles from Niagara Falls to Syracuse, New York, crossing our service territory. We believe that some kind of participation in this project could offer an alternative gas source, increase reliability and help assure economical gas costs for our customers.

Nine Mile Two

The performance of the Nine Mile Two nuclear power plant fell short of our expectations and it remains on the Nuclear Regulatory Commission's list of nuclear plants "categorized as requiring close monitoring." Plants in this category have been identified by the Commission as having weaknesses that warrant increased attention by that agency.

The operator, Niagara Mohawk Power Corporation, is taking steps to improve the plant's performance. Beyond that, in August of 1989, a new Interim Operating Agreement was adopted that permits the non-operating partners more control over the plant's administration and operation in the form of a management committee.

Also, under that agreement, Management, Analytical & Technical Services, Inc. was created. This corporation, staffed with nuclear industry and utility experts, works with non-operating owners and the plant operator to provide assessments with the goal of improving plant performance.

During the term of this 18-month agreement, alternative, permanent operating arrangements will be explored, including the possible formation of a separate operating entity for the plant.

So, while we are somewhat disappointed with the plant's performance so far, we believe the prospects for the future of that plant are good.

Rates

Under a 1988 agreement with the New York State Public Service Commission (PSC), we are keeping electric and gas rates at levels set back in January of 1988 for electric and January of 1987 for gas. We have managed to stay well within our intent to keep electric and gas cost increases for our customers below the inflation rate. In fact, the combined annual electric and gas costs in real dollars to residential customers who heat with gas have decreased nearly 20 percent since 1983.

In August of 1989 we filed a petition with the PSC for additional electric and gas revenues to take effect in July of this year. We are seeking additional annual electric revenues of $40.0 million, a 7.4 percent increase, and $3.3 million in annual gas revenues, or a 1.3 percent increase. If granted in full, the impact on the residential customer would be less than that of inflation.

In this rate proceeding, the PSC Staff recommends electric revenues lower than requested, no increase in gas revenues, and a return on common equity of 11.5 percent compared with the 13.0 percent return we requested. The rate case will be decided by July.

Customer Connection

We have rededicated ourselves to heightening customer satisfaction with our service, customer assistance, and energy commodities. The backbone of the information campaign is our Customer Connection program in which our consumer services are promoted. A 1989 independent survey of consumer opinion revealed that customer awareness of RG&E's consumer assistance programs is at an all-time high. A major share of our communications resources is being channeled into Customer Connection with satisfying results.

Demand Side Management

Another area where we are making a substantial corporate commitment is Demand Side Management, or DSM as it's known. The DSM programs are intended to diminish projected electric use in the 90s. The programs range in scope from the negotiation of contractual power reduction agreements with commerce and industry, to the conduct of basic household energy audits for energy efficiency.

We established a fully-staffed Demand Side Management department within the company to work with customers in the development and administration of the programs. A comprehensive information campaign is being developed to promote the programs to the customers who may benefit from them.

Capital Requirements

Capital requirements, including maturing securities and sinking fund obligations, were $163 million in 1989 and are expected to be $176 million in 1990. Approximately $54 million will be spent at the company's Ginna nuclear power plant in 1990. Of that amount, $41 million will be spent to continue plant modifications and upgrade programs to maintain the plant's excellent performance record, and $13 million will be spent for nuclear fuel. During the past year, we financed our capital requirements through temporary cash investments and internal sources. In 1990 we expect to use remaining temporary cash investments and our revolving credit agreement for our capital requirements and we may seek long-term financing toward the end of 1990.

Outlook

The economy in the greater Rochester area remains strong. Local organizations, including RG&E, are actively promoting the area for commercial and industrial development. As the supplier of electricity and natural gas, RG&E is deeply involved in the area development processes.

We promote healthy growth in several ways. Our successful attempts to keep the price of our energy products below the inflation rate improve our competitive position. Beyond price we actively support our customers through marketing efforts. For example, a marketing campaign promoting improvements in energy-efficient security and facade lighting is exceeding our expectations. Energy discounts for eligible customers through economic development programs are attracting new businesses and encouraging others to expand.

At the same time, we believe our demand side management programs can help us delay the need for additional electric generating capacity on our system. Based on our energy growth projections, we have an adequate supply of electricity through the mid 90s. Gas supplies appear to be adequate in the foreseeable future.

Our energy is not all in the form of electricity and gas. Our dedicated work force of 2,660 RG&E people is the energy that makes us function as a company. Our employees continue to find new ways to be more productive and to manage expenses. Their notable efforts, day in and day out, are a principal factor in our success as a company, both with regard to financial results and improved customer satisfaction.

The new decade of the 1990s will bring more change to our business. We will continue to find opportunities in the changes. The prospect of competitive bidding for additional electric capacity doesn't bother us as long as the process is equitable and can produce reliable energy supplies. The move to shift electric load to forestall additional capacity requirements suits us well. We don't want to add any more electric capacity until absolutely necessary and only then at the least possible cost. We are well equipped to make the most of the opportunities in this new decade, and we will make the most of them to the benefit of shareholders, customers and employees alike.

Harry G. Saddock
Chairman of the Board
and Chief Executive Officer

Roger W. Kober
President
and Chief Operating Officer

February 1, 1990

MANAGEMENT'S DISCUSSION AND ANALYSIS

The following is Management's assessment of significant factors which have affected the Company's financial condition and operating results. As indicated below, the Company's participation in the Nine Mile Two project has had and continues to have a substantial impact on its financial condition and results of operations. The Company currently plans no major additions to generating capacity over the next several years.

Nine Mile Two

The Nine Mile Two nuclear power plant was constructed and is being operated by Niagara Mohawk Power Corporation (Niagara) near Oswego, New York. The Company has a 14 percent ownership in this 1,080,000 kilowatt nuclear generating unit (the Unit or Nine Mile Two).

A series of occurrences cumulatively kept the Unit from operating at a sustained, high level of performance during much of 1989. Extension of the Fall 1988 mid-cycle outage into 1989 and discovery of a problem in the Unit's service water system combined to delay the return of the Unit to service until early April. The Unit then ran well through the spring and summer, achieving a period of 135 consecutive days at or near full power. Since then, however, operation has been sporadic due to several unrelated equipment problems at the facility. The Unit's cumulative net capacity factor for 1989 was 45.5%.

Plant staff has utilized these unscheduled outages to perform surveillance testing originally scheduled for a Spring 1990 refueling outage which may enable the refueling outage to be deferred until Fall 1990. However, Nuclear Regulatory Commission (NRC) concurrence for postponement of certain testing, or additional planned outages, would be required to delay the refueling outage until that time.

Although recent operating experience shows that the operating performance of many U.S. commercial nuclear reactors of the size and type of Nine Mile Two is below the average for all plants, the trend for the group, as well as for all plants, is toward improved performance. The Company believes that the events which affected the operating performance of Nine Mile Two in 1989 are not indicative of longer-term performance, and that the operating performance of Nine Mile Two will improve consistent with industry experience.

In October 1986, the New York State Public Service Commission (PSC) issued an order approving a settlement proposal (Nine Mile Two Settlement) which limits to $585 million (less prepaid financing charges of $96 million) the amount of Nine Mile Two construction costs which may be included in the Company's rate base. As a result of a rate agreement approved by the PSC in July 1988, the Company's full investment in allowable Nine Mile Two capital costs, assuming an April 15, 1988 commercial operation date, was included in rate base effective with the rate year beginning August 1, 1988.

In 1987 the Company wrote off $262 million (net of tax) of its investment in Nine Mile Two in recognition of the Nine Mile Two Settlement. Nevertheless, a number of additional issues have remained unresolved including, among other things, whether the costs for certain common facilities and certain post-in-service capital additions are outside the scope of the Nine Mile Two Settlement, and certain other Nine Mile Two Settlement implementation issues.

Negotiations have been taking place between the Nine Mile Two cotenants, the PSC Staff and other parties to resolve these outstanding issues pertaining to the Unit. On January 24, 1990, an oral agreement was reached to resolve all open Unit ratemaking issues with respect to the construction of the Unit and its operation through January 19, 1990, including a petition by the Attorney General of the State of New York seeking disallowance of some utility replacement power costs associated with the Fall 1988 Unit outage. The net impact upon the

Company of this agreement is an additional estimated write-off of $1.4 million, or $.05 per share, recognized in December of 1989. This write-off reflects, and is net of, income tax effects and the current recognition of all of the benefits to which the Company is entitled under the cotenants' settlement with General Electric Company (see Note 10 of the Notes to Financial Statements).

The Company is not able to provide an assurance that the agreement discussed in the preceding paragraph will result in a written settlement proposal to the PSC, although it believes it probable that such will occur. The Company cannot give any asssurance that, if a written settlement proposal is submitted, the PSC will approve it. The Company does not expect at this time any further write-offs pertaining to Nine Mile Two.

Operations at Nine Mile Two are being closely observed by the NRC. Since December 1988, Nine Mile Two has been on the NRC's list of nuclear plants which require "close monitoring" by it, a category of plants identified as having weaknesses warranting such attention. Two subsequent reviews of such plants have been conducted by the NRC. The first, in June 1989, continued the Unit in the same category, as did the second review in January 1990.

In August 1989, the cotenant owners of Nine Mile Two executed an 18-month interim operating agreement providing for additional management oversight of the Unit by the four non-operating cotenants. The agreement also provides for evaluation by the cotenants of alternative operating arrangements, including the possible formation of an operating company.

For additional information regarding the Company's investment in Nine Mile Two, refer to Note 10 of the Notes to Financial Statements.

Liquidity and Capital Resources

The Company's cash and cash equivalents decreased in 1989 from year-end 1988 primarily as a result of lower cash flow from operations (see Statement of Cash Flows, page 21), the redemption of debt, and higher construction expenditures. On December 31, 1989 the Company had $10.2 million in cash and cash equivalents. Construction expenditures and securities redemptions will continue to reduce the Company's cash and cash equivalents during 1990 and external financing will be required to meet the funding requirements anticipated in its 1990 capital program.

Capital Requirements

The Company's capital program is designed to maintain reliable and safe electric and natural gas service and to meet future customer service requirements. Capital requirements for the three-year period 1987–1989 and the current estimate of capital requirements through 1992 are summarized in the table on page 8.

For the period 1990 to 1992, the Company anticipates construction requirements to average approximately $145 million per year. Expenditures made at the Company's nuclear facilities to improve operating efficiency and comply with regulatory requirements are expected to increase electric production plant costs over the period. In addition to its construction requirements, the Company has mandatory securities maturities and sinking fund obligations, which total approximately $145 million over the three years 1990–1992.

Capital Requirements

Type of Facilities	Actual 1987	Actual 1988	Actual 1989	Projected 1990	Projected 1991	Projected 1992
	(Millions of Dollars)					
Electric Property:						
Production	$ 60	$ 39	$ 48	$ 52	$ 50	$ 46
Transmission and Distribution	22	28	28	30	33	35
Street Lighting and Other	2	1	2	3	2	2
Subtotal	84	68	78	85	85	83
Nuclear Fuel	16	17	12	15	20	16
Total Electric	100	85	90	100	105	99
Gas Property	14	15	17	16	17	18
Common Property	7	7	12	18	11	11
Total	121	107	119	134	133	128
Carrying Costs:						
Allowance for Funds Used During Construction (AFUDC)	8	4	4	6	8	7
Deferred Financing Charges Included in Other Income	6	1	2	11	9	–
Total Construction Requirements	135	112	125	151	150	135
Securities Redemptions, Maturities and Sinking Fund Obligations*	91	69	38	25	40	80
Total Capital Requirements	$226	$181	$163	$176	$190	$215

*Excludes prospective refinancings.

Included in the table above are the carrying charges, or financing costs, associated with major projects under construction. These carrying costs become a part of the capitalized cost of the related project. The Company begins to earn a cash return on its investment, including these carrying costs, when the cost of the project is included in rate base, which generally is at the time such project enters service. AFUDC over the next 3 years should continue to stabilize in the $6 million to $8 million range in contrast to significantly higher levels during the construction of Nine Mile Two. In addition to AFUDC, carrying charges include the recognition of certain customer prepaid financing costs, as further discussed below under Rate Base and Regulatory Policies.

◆ *1989 Capital Requirements*

Electric production plant requirements, including AFUDC, in 1989 included $41 million of expenditures made at the Company's Ginna nuclear plant and $5 million of expenditures for Nine Mile Two, exclusive of fuel costs. The increase in 1989 electric production plant expenditures over 1988 primarily reflects expenditures for projects associated with a mandatory ten-year inspection undertaken in 1989 and the upgrading of programs and facilities to meet regulatory requirements and industry standards at the Ginna plant. Electric Department expenditures also included $26 million in 1989 for the upgrading of distribution facilities to meet the energy requirements of existing and new customers. In addition, the Company incurred expenditures, including AFUDC, of $13 million for nuclear fuel, $10 million for Ginna and $3 million for Nine Mile Two.

Construction expenditures, including AFUDC, in the Gas Department totaled $18 million in 1989, principally for the replacement of older cast iron mains with longer-lasting and less expensive plastic pipe, the relocation of mains for highway improvement, and the installation of services for new loads, including mains to serve a new franchise area near Livonia, New York.

Total capital requirements in 1989 also included bond maturities and sinking fund obligations totaling approximately $38 million, of which $20.0 million was spent to satisfy the first annual sinking fund requirement of the Series NN First Mortgage Bonds.

◆ ***Projected Capital and Other Requirements***

The Company anticipates it will not need to construct its own new generating capacity for at least the next several years. The Company, like other New York State electric utilities, is required by the PSC to seek open bidding for new electric generation projects and expects such bidding will be for plants of 100 megawatts or less. The Company will continue to make generating plant modifications and its construction program will focus on the need to serve new customers, to provide for the replacement of obsolete or inefficient utility property and to modify facilities consistent with the most current environmental and safety regulations.

Increased nuclear plant expenditures as a result of regulatory requirements, industry standards, and the Company's commitment to maintain a high level of nuclear safety and performance are reflected in its projected 1990 construction program. Construction requirements for 1990 also include additional expenditures to be made at the Company's fossil-fueled and hydro generating plants.

In addition to its projected capital requirements as shown in the table on page 8, the Company will make deposits annually, beginning in 1990, to an external decommissioning trust in satisfaction of certain funding requirements established by the NRC to meet the eventual decommissioning costs of nuclear plants. As of mid-January 1990, the Company expected to deposit in this trust approximately $8.6 million in 1990, and $10.1 million in each of the years 1991 and 1992. The Company has been collecting in its electric rates certain amounts for the future decommissioning costs of its nuclear facilities. Further information about the establishment and funding of the Company's external decommissioning trust fund can be found in Notes 1 and 11 of the Notes to Financial Statements.

As conditions warrant, the Company may also consider the optional redemption or refinancing of certain long-term securities.

The Company's capital expenditures program is under continuous review and will be revised depending upon the progress of major construction projects, customer demand for energy, rate relief, government mandates and other factors.

Liquidity, Financing and Capital Structure

During 1989, capital requirements were met by the Company primarily from internally generated funds and proceeds provided from the redemption of temporary cash investments. The Company had no public issuance of securities in 1989. It did, however, raise $8.8 million to fund its capital expenditures program by issuing shares of Common Stock through its Automatic Dividend Reinvestment and Stock Purchase Plan (ADR Plan), which was converted to an open-market plan in October 1989, as discussed below. Primarily as the result of payment on matured debt and sinking fund requirements, the Company's long-term debt decreased in 1989, helping to reduce its capitalization debt ratio as illustrated by the graph to the left.

With the Company's current cash position and construction activity as presently projected, the Company anticipates meeting its 1990 capital requirements primarily from the combination of temporary cash investments, internally generated funds and short-term borrowings. It is currently the Company's intention to utilize its revolving credit agreement to meet any interim external financing needs prior to issuing any long-term securities.

◆ ***Financing***

Interim financing is available from certain domestic banks in the form of short-term borrowings under a $90 million revolving credit agreement which continues until

Debt Ratio*

(percent at year end)

*Long term debt component of total capitalization

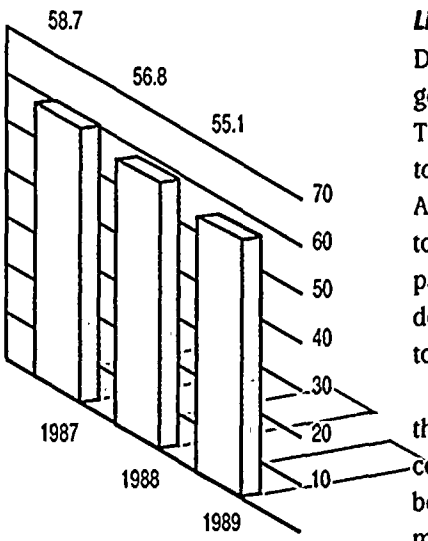

*Mandatory and optional redemptions of long term debt have contributed to a lower debt ratio.

Retained Earnings-Year End
(millions of dollars)

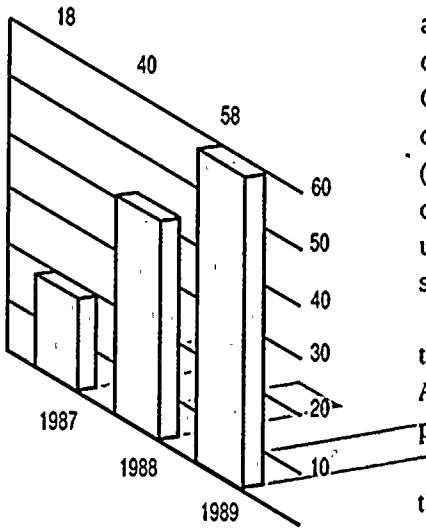

Retained earnings have continued to grow following the 1987 Nine Mile Two write-off.

Book Value per Share
(dollars at year end)

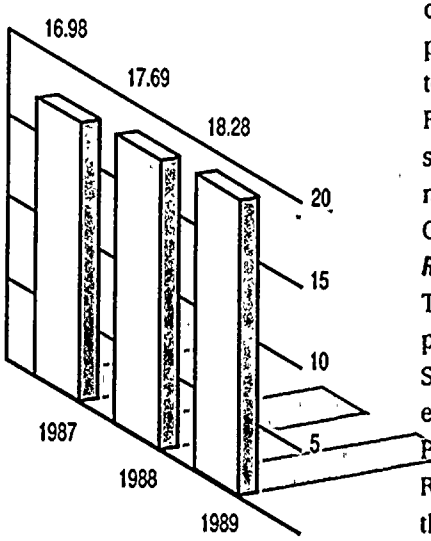

A decline in the issuance of new common shares and increased shareholders equity have raised book value per share.

December 31, 1992 and may be extended annually. Borrowings under this revolver are secured by a subordinate mortgage. At December 31, 1989 the Company had no short-term debt outstanding.

Interim financing may also be available through short-term borrowings with bank notes and commercial paper if, at the time of the borrowing, the Company can satisfy its unsecured debt limitation. Under provisions of the Company's Certificate of Incorporation (Charter), the Company may not issue unsecured debt if immediately after such issuance the total amount of unsecured debt outstanding would exceed 15 percent of the Company's total capitalization (excluding unsecured debt) without the approval of at least a majority of the holders of outstanding Preferred Stock. Under this restriction, the Company as of mid-January 1990 was unable to issue unsecured debt. Interim financing capability remains available, however, with secured borrowings under the Company's revolving credit agreement as discussed above.

To help meet its capital requirements, the Company anticipates obtaining interim financing through its revolving credit agreement before seeking more permanent long-term financing. As conditions warrant, the Company may also, from time to time, issue long-term securities to permit the early redemption of higher cost senior securities.

The Company during 1989 issued approximately 472,000 new shares of common stock through its ADR Plan, providing approximately $8.8 million to help finance the Company's capital program. In June 1989, the Company amended its ADR Plan to provide for the open-market purchase of outstanding common stock shares rather than original-issue shares. The remaining balance of original-issue shares under the ADR Plan was issued in October 1989.

♦ *Capital Structure*

As illustrated by the graph to the upper left, the Company has continued to experience a growth in retained earnings following the write-off in 1987 for disallowed Nine Mile Two plant costs as discussed above. Since the end of 1987, book value per share of common stock has also increased as indicated by the graph to the left. At December 31, 1989, retained earnings were $58.0 million, up $18.3 million from year-end 1988. Increased retained earnings, coupled with debt redemptions, in 1989 helped to boost common equity to 38.4 percent of capitalization at December 31, 1989. The balance of such capitalization was comprised of 6.5 percent preferred equity and 55.1 percent long-term debt, and includes the Company's long-term liability to the federal Department of Energy explained in Note 1 of the Notes to Financial Statements. It is the Company's intention in 1990 to move to a less leveraged capital structure through growth in retained earnings and the retirement of long-term debt through mandatory sinking fund redemptions and maturities. To strengthen its capital structure, the Company will also consider the optional redemption of high-cost senior securities.

Rate Base and Regulatory Policies

The Company's base rates are frozen at their present levels through at least June 1990 pursuant to the terms of a negotiated rate settlement reached in June 1988 (the 1988 Rate Settlement). The Company has filed a request with the PSC to increase base rates for electricity and gas service effective July 1990. The Company expects a final decision from the PSC by July 1990, but it is unable to predict what action the PSC may ultimately take. Recent PSC rate decisions and the Company's pending rate request are summarized in the table on page 11.

Rate Increases

Granted

Class of Service	Effective Date of Increase	Amount of Increase (Decrease) (Annual Basis) (000's)	Percent Increase (Decrease)	Authorized Rate of Return on Rate Base	Authorized Rate of Return on Equity
Electric	January 2, 1986	$ 2,845*	0.6%	12.09%	15.00%
	July 20, 1986	20,895	4.4	10.75	12.60
	January 2, 1987	1,223*	0.2	10.75	12.60
	July 17, 1987	16,198	3.4	10.48	13.20
	January 4, 1988	2,413*	0.5	10.48	13.20
	July 26, 1988	–	–	10.39**	13.40
Gas	July 20, 1986	(3,185)	(1.1)	10.75	12.60
	January 2, 1987	458*	0.2	10.75	12.60
	July 17, 1987	–	–	10.48	13.20
	July 26, 1988	–	–	10.39**	13.40

*Second step increase allowed.
**For the year beginning August 1, 1989, the authorized rate of return on rate base is 10.46%.

Pending

Class of Service	Date of Filing	Amount of Increase* (Annual Basis) (000's)	Percent Increase*	Requested Rate of Return on Rate Base	Requested Rate of Return on Equity
Electric	August 15, 1989	$39,993	7.4%	10.28%	13.00%
Gas	August 15, 1989	3,258	1.3	10.28	13.00

*As amended.

◇ ***New York State Public Service Commission (PSC)***

Rate decisions prior to the 1988 Rate Settlement had allowed the Company to include up to $430 million of Nine Mile Two plant costs in rate base. As a part of the 1988 Rate Settlement, the Company was permitted to include the balance of allowable Nine Mile Two plant cost in rate base beginning in August 1988. In addition, essentially all of the then-projected operating and maintenance expenses for plant operation were reflected in rates. The 1988 Rate Settlement also granted the Company authority to include in income $42 million in unbilled revenues and $5 million in deferred Nine Mile Two revenues over the two-year period ending July 31, 1990 (see Operating Revenues and Sales).

For the rate year ended July 31, 1989, and based solely on calculations prescribed in the 1988 Rate Settlement, the Company's earned return on equity in the Electric Department was lower than its authorized return, but earnings from its Gas Department exceeded that Department's authorized return. Since the 1988 Rate Settlement provided for an equal sharing between customers and shareholders of any earnings above the authorized return on common equity, as so calculated, the Company believes its gas customers are entitled to an after tax earnings credit of approximately $1.6 million, subject to pending PSC approval. This liability is reflected in the Company's 1989 financial statements. In its August 1989 rate filing (see below), the Company has proposed that this credit be recognized as an adjustment to its gas revenue requirements. A similar sharing provision applies for the rate year ending July 31, 1990.

Prior to commercial operation, the Company had been allowed to include certain Nine Mile Two plant costs in rate base, as indicated above. AFUDC was not accrued on these amounts. Instead, however, the Company accumulated a similarly calculated amount until

commercial operation and recorded it on the Balance Sheet as a deferred credit (liability), with an equivalent amount recorded as a deferred debit (asset). The deferred credit represents customer prepaid financing costs, while the deferred debit represents financing costs (or AFUDC). The latter is expected to be recovered over the life of the facility through amortization if the PSC chooses to utilize these amounts to moderate customer rates. As permitted by the 1988 Rate Settlement, the Company in July 1988 eliminated one-half of these deferred balances by offset (that is, equal amounts of the deferred debit and deferred credit balances were eliminated); and, for the rate year beginning August 1989, the Company started amortizing $4.1 million of the deferred credit balance to Other Income, with a corresponding increase to the Company's rate base. Amortization of these deferred credits had aggregated $13 million through December 31, 1989. If not used prior to July 31, 1992 as non-cash earnings for rate moderation purposes, both the remaining deferred credit and deferred debit balances, currently estimated to be $41 million at June 30, 1990, would be eliminated as permitted by the 1988 Rate Settlement. In its 1989 rate filing (see below), the Company has proposed to amortize an additional $17.3 million of such deferred credits over the rate year ending June 30, 1991.

In August 1989 the Company filed rate requests with the PSC as summarized under the heading "Pending" in the table on page 11. The higher rates have been requested to cover those increases in capital and operating costs projected for the rate year ending June 30, 1991 that are neither adequately provided for in present rates nor expected to be offset by increased revenues from sales. The staff of the PSC and intervenors have proposed lower rate increases than those sought by the Company. The Company is unable to predict what, if any, rate changes may be approved by the PSC. A decision on this filing is expected by July 1990.

Results of Operations

The following financial review identifies the causes of significant changes in the amounts of revenues and expenses, comparing 1989 to 1988 and 1988 to 1987. The Notes to Financial Statements on pages 22 to 37 of this report contain additional information. Upon the commercial operation of Nine Mile Two, recognized by the Company in April 1988, the Company began to record operating revenues and operating expenses associated with the plant's operation.

Operating Revenues and Sales

Compared with a year earlier, operating revenues increased nine percent in 1989 after increasing six percent in 1988. Details of the revenue changes are presented in the table below.

Operating Revenues

Increase or (Decrease) from Prior Year (Thousands of Dollars)	Electric Department 1989	Electric Department 1988	Gas Department 1989	Gas Department 1988
Customer Revenues (Estimated) from:				
Rate Increases	$ 87	$12,029	$ –	$ (37)
Unbilled Revenues, Net	13,954	8,067	17,068	(198)
Fuel Clause Adjustments	4,787	(19,378)	14,937	(2,152)
Weather Effects (Heating)	272	660	4,513	9,187
Customer Consumption	13,819	15,205	6,624	11,672
Transportation Gas	–	–	(5,299)	(6,174)
Other	(4,460)	8,688	(4,487)	511
Total Change in Customer Revenues	28,459	25,271	33,356	12,809
Electric Sales to Other Utilities	8,062	3,751	–	–
Total Change in Operating Revenues	$36,521	$29,022	$33,356	$12,809

Operating Revenues less Fuel Expenses
(millions of dollars)

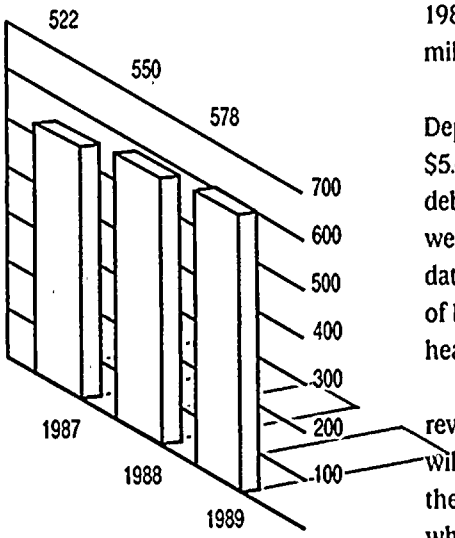

In 1989, operating revenues less fuel expenses continued a trend upward.

Operating revenues less fuel expenses were also up in 1989 as shown in the graph to the left. For comparative purposes, the Company has reclassified electric and gas deferred fuel costs from expense to revenue for periods prior to January 1989. The amounts restated for 1988 and 1987 resulted in a net increase in revenue and fuel expense for the year of $1.8 million and $2.5 million, respectively. This reclassification has no effect on earnings.

The increase in operating revenues resulting from rate increases in the Electric Department, as presented in the table on page 12 for the 1988 comparison period, includes $5.6 million of Nine Mile Two in-service revenue requirements which were deferred through a debit (charge) to operating expenses and, therefore, did not affect earnings. These revenues were deferred as a result of a delay in the commercial operation of Nine Mile Two beyond that date assumed in rate orders preceding commercial operation. With the commercial operation of Nine Mile Two, the Company began to reverse such deferrals, as discussed under the heading Operating Expenses, Excluding Fuel.

Beginning in July 1988 as part of a rate decision, the PSC approved recording of unbilled revenue. Accordingly, approximately $42 million associated with the change in accounting will be amortized to income during the period July 1988 to July 1990. Unbilled revenues are the estimated revenues attributable to energy which has been delivered to customers but for which the metered amount has not been read and recorded on the Company's books. As a non-cash item, such revenues do not enhance the Company's cash position. In accordance with the 1988 Rate Settlement, the Company began making monthly accruals for unbilled revenues at December 31, 1988. The Company's Statement of Income reflects net unbilled revenues of $10.4 million in 1988 and $41.4 million in 1989. Under the 1988 Rate Settlement, the Company in 1990, through June, will amortize to revenues $12.6 million of deferred unbilled revenues associated with this change in accounting. The Company has requested, as part of its pending gas rate request (see above), to amortize an additional $6.0 million of such unbilled revenues over the rate year beginning July 1990. The adoption of this accounting method has made 1989 quarterly earnings comparisons to comparable periods of prior years less meaningful because it results in the recognition of customer revenue in different months than in the past. However, for quarterly periods subsequent to 1989 and for calendar years, the change in accounting will have no effect on earnings comparisons. Primarily as a result of the seasonal nature of our gas revenues, unbilled revenues will normally be near their maximum in December and near their minimum at the end of June.

The Company's fuel clause provisions currently provide that customers and shareholders will share, generally on an 80%/20% basis, respectively, the benefits and detriments realized from actual electric fuel costs, generation mix, sales of gas to dual-fuel customers and sales of electricity to other utilities compared with PSC-approved forecast amounts. As a result of these sharing arrangements, discussed further in Note 1 of the Notes to Financial Statements, pretax earnings were reduced $1.1 million in 1988 and $3.7 million in 1989, primarily reflecting actual experience in both electric fuel costs and generation mix compared with rate assumptions. In January 1989, the Audit Section of the PSC began an audit of the Company's fuel procurement practices. Similar audits at other New York utilities have produced recommendations that the PSC require refunds of a portion of rates charged to customers for fuel costs. A draft report was expected to be available for Company comment in the first quarter of 1990. The Company believes its fuel procurement practices to be sound, but is unable to predict what the PSC Audit Section may recommend or what action the PSC may take.

Electric Sales
(thousands of mwh)

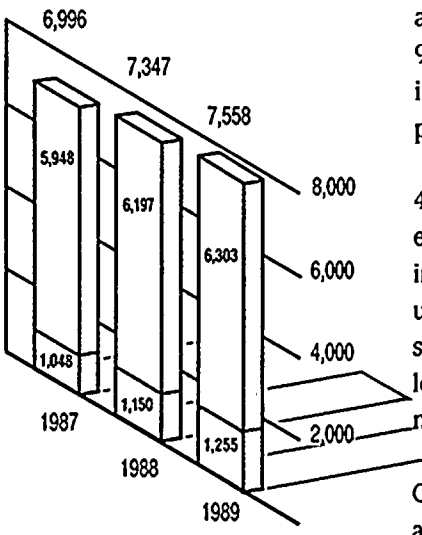

The local economy has helped to boost electric sales.

The effect of weather variations on operating revenues is most measurable in the Gas Department, where revenues from space heating customers comprise about 90 percent of total gas operating revenues. Reflecting conditions primarily during late spring and the last two months of the year, the weather in terms of heating for all of 1989 was 3.6 percent colder than 1988, as measured on a calendar month degree day basis. In 1989, the Company's service area experienced a cooler summer during which temperatures reached or exceeded 90 degrees on only 6 days compared with 17 days during the summer of 1988. Notwithstanding the warmer 1988 summer, weather for the full year of 1988 was approximately seven percent colder than 1987 on a calendar month degree day basis.

Kilowatt-hour sales of energy billed to customers was up 1.7 percent in 1989, following a 4.2 percent increase in 1988 as shown by the graph to the upper left. The growth in electric energy sales in 1989 was restrained by the impact of a much cooler summer on air conditioning usage compared to a year earlier when the Company's service area experienced an unusually warm summer, as previously discussed. During both 1989 and 1988, electric energy sales to all major customer groups increased. Contributing to these increases was a diversified local economy and, as illustrated by the graph to the lower left, continued growth in the number of electric customers.

Fluctuations in revenues from electric sales to other utilities are generally related to the Company's customer energy requirements, New York Power Pool energy market conditions and the availability of electric generation from Company facilities. The availability of power from Nine Mile Two, along with generation from the Ginna nuclear plant, allows the Company to sell more fossil-fueled generation to other utilities while retaining lower incremental-cost nuclear-generated energy for the Company's own electric customers.

The transportation of gas for large-volume customers who are able to purchase natural gas directly from producers remains an important component of the Company's marketing mix. Company facilities are used to transport this gas, which amounted to 105.3 million therms in 1989 and 83.6 million therms in 1988. These direct purchases have caused decreases in customer revenues, as shown in the table on page 12, with offsetting decreases in fuel expenses, but do not adversely affect earnings because transportation customers are billed at rates which, except for the cost of gas, approximate the rates charged the Company's other gas service customers. Gas supplies transported in this manner are not included in Company therm sales, depressing reported gas sales to non-residential customers.

After increasing by 8.6 percent in 1988, total therms billed and transported increased 4.9 percent in 1989 as illustrated by the top graph on page 15. These increases reflect, in part, the effect of weather variations primarily on therm sales to residential customers with space heating. Also contributing to the increase in therm sales was a strong growth in the number of gas customers as illustrated by the lower graph on page 15. Over the next few years, the Company expects to add about 600 new gas customers resulting from the acquisition in August 1989 of a new franchise area around Livonia, New York. Annual sales from this area are expected to reach approximately 1.5 million therms.

New Electric Customers

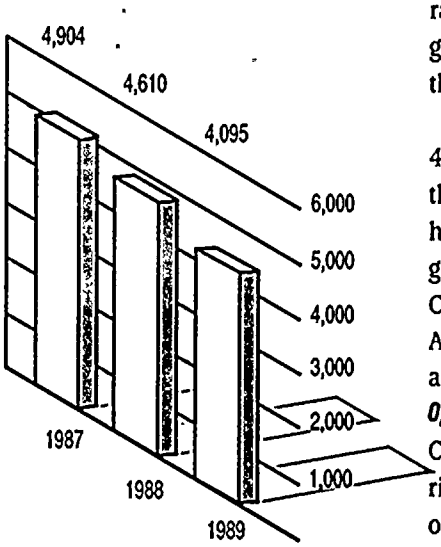

Over the past 3 years, the number of new electric customers has exceeded 13,500.

Operating Expenses

Compared with a year earlier, operating expenses increased twelve percent in 1989 after rising four percent in 1988. These increases, in part, are due to the recording of Nine Mile Two operation and maintenance expenses commencing in April 1988, as stated above. For 1989, operating expenses also reflect higher energy costs and increased maintenance expense incurred primarily at the Company's Ginna nuclear plant. Pursuant to the terms of the 1988

Gas Sales
(millions of therms)

□ Sold
□ Transported

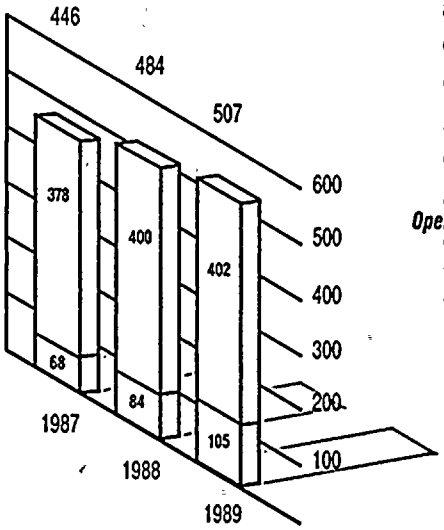

Colder weather in 1989 contributed to an increase in therms sold and transported.

Rate Settlement, the Company will absorb, or benefit by, the first $825,000 by which its share of Nine Mile Two operating expense varies from a forecasted share of $14.2 million for the rate year ending July 1990 and then divide equally any remaining variance with its customers. A similar provision was made for the rate year ended July 1989. For the rate year ended July 1989, the Company's share of actual Nine Mile Two operating expenses exceeded the amount assumed in the 1988 Rate Settlement by $4.8 million. At December 31, 1989 the Company had deferred $2.5 million of Nine Mile Two operating expenses, recorded on the Company's Balance Sheet as a deferred asset, which it has requested to recover in its pending rate request as permitted by the 1988 Rate Settlement. A summary of the change in operating expenses for the 1989 and 1988 comparison periods is presented in the table below.

Operating Expenses

Increase or (Decrease) from Prior Year (Thousands of Dollars)	1989	1988
Fuel for Electric Generation	$10,086	$ 4,344
Purchased Electricity	9,346	3,832
Gas Purchased for Resale	23,027	5,510
Other Operation	14,075	519
Maintenance	11,741	6,451
Depreciation and Amortization	5,360	14,173
Taxes Charged to Operating Expenses	3,883	(9,497)
Total Change in Operating Expenses	$77,518	$25,332

◆ ***Energy Costs—Electric***

For both the 1989 and 1988 comparison periods, increased generation from the Company's fossil-fueled units was largely responsible for the increase in fuel expenses for electric generation. This higher generation reflects the Company's reliance on relatively expensive fossil-fueled generation to meet the needs of customers during various outages of the Ginna nuclear plant and Nine Mile Two, together with greater sales of energy to other utilities. Lower coal prices during both comparison periods helped to hold down the increases in fuel expense for electric generation. The Company's installed generating capability by fuel type at year-end 1989 is presented in the graph on page 16.

Affecting purchased electricity expense was an increase in average rates in 1989 and 1988. Kilowatt-hours purchased for both periods increased only moderately.

◆ ***Energy Costs—Gas***

The gas procurement practices of the Company reflect an open-market approach that allows the Company and many of its large-consumption gas customers to take advantage of favorable spot market purchases. These purchases, together with contract purchases, allow the Company more flexibility to respond to price variations and provide a diversity of supply. The Company's contract with its present major supplier of natural gas continues until June 30, 1990 and thereafter until terminated by either party upon twelve months' notice. As of mid-January 1990, the Company was negotiating a new multi-year contract with this supplier. The final terms of any new contract cannot be determined at this time by the Company.

After declining in 1988, average rates for the cost of gas purchased increased in 1989; this increase was the primary reason for higher purchased gas costs in 1989. The cost of gas purchased in 1989 also includes approximately $400,000 of take-or-pay costs (see Note 11 of

New Gas Customers

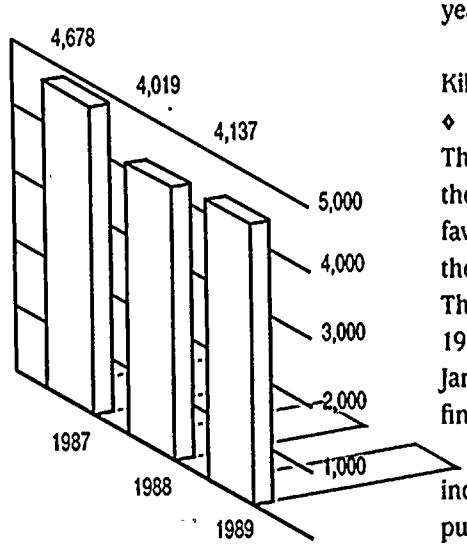

New residential spaceheating customers account for the biggest increase in gas customers.

Generating Capability (Mw)
(at December 31, 1989)

1. Fossil (coal & oil)
2. Nuclear
3. Hydro / Other
4. Purchased

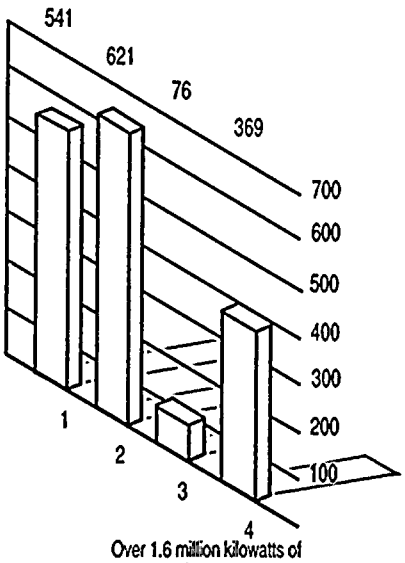

Over 1.6 million kilowatts of capability are available to the Company.

the Notes to Financial Statements) absorbed by the Company during the year. The cost of gas purchased was up in 1988 due largely to an increase in the volume of gas purchased.

◆ ***Operating Expenses, Excluding Fuel***

Excluding the effect of accounting procedures on certain operating accounts, other operation expenses increased approximately $18 million in 1989 and $20 million in 1988. These increases include $5.2 million in 1989 and $10.7 million in 1988 of additional expense associated with the commercial operation of Nine Mile Two. Higher payroll costs connected, in part, with increased manpower requirements to support the Company's nuclear operations and to help ensure regulatory compliance also increased other operation expenses during both comparison periods. Decreasing other operation expenses in 1988 by $18 million was an accounting procedure in connection with the deferral of Nine Mile Two revenues. With the commercial operation in April 1988 of Nine Mile Two, accounting adjustments were made to reverse prior revenue deferrals which had recognized recovery of Nine Mile Two operation and maintenance expenses prior to the actual commercial operation date.

Maintenance expense was up during both comparison periods primarily as a result of increased activity at the Company's Ginna nuclear plant. In 1989, the Company incurred additional maintenance expense associated with an extensive ten-year inspection during the plant's annual outage for refueling. Maintenance expense in 1989 also reflects the recording of Nine Mile Two expenses for a full year, in contrast to approximately nine months beginning with commercial operation in 1988.

The recognition of Nine Mile Two depreciation expense, commencing with the commercial operation of the facility in April 1988, was responsible for most of the depreciation and amortization expense variance between the 1989 and 1988 comparison periods. As provided in prior rate decisions, amortization of the Sterling project property loss, excluding land, will terminate in 1991 and will result in a reduction to amortization expense of approximately $5.2 million in 1990 compared with 1989.

◆ ***Taxes***

Fluctuations in local, state and other taxes reflect changes in gross income and gross earnings taxes, which are based on revenues, together with the effect of higher property taxes due to higher tax rates and assessments. The recognition of these taxes as operating expenses once Nine Mile Two entered commercial operation accounts for over one-half of the 1988 comparison period increase and approximately one-third of the increase in 1989 over 1988.

As a result of the Tax Reform Act of 1986 (Tax Act), the Company's marginal Federal income tax rate was reduced from 40 percent in 1987 to 34 percent in 1988 and thereafter. Certain tax provisions imposed under the Tax Act have resulted in higher currently payable Federal income taxes, but a reduced total Federal income tax provision for book purposes. The 1988 Rate Settlement incorporated these tax changes through July 1990 and called for the adjustment of certain accumulated deferred tax balances to the 34 percent level over the two-year period ending July 1990. The Company's pending rate proceedings, discussed earlier, reflect a prospective increase in currently payable Federal income taxes presently anticipated by the Company in compliance with the provisions of the Tax Act.

In December 1987, the FASB issued a Statement of Financial Accounting Standards entitled "Accounting for Income Taxes" (SFAS-96). Among other things, SFAS-96 requires the Company to adjust certain of its deferred tax assets and liabilities to reflect periodic changes in tax rates. In addition, the Company may also be required to provide deferred taxes for the effect of tax benefits previously flowed through to the Income Statement. SFAS-96 is currently not required

to be adopted by the Company until 1992. The Company is presently unable to estimate the effects of the adoption of SFAS-96, but the Company does not presently believe the earnings impact to be significant.

Other Statement of Income Items

As discussed above, the Company's 1987 Statement of Income reflects the cumulative effect as of January 1, 1987 of an accounting change in connection with the write-off of disallowed Nine Mile Two plant costs in 1987. Disallowed costs for the period subsequent to January 1, 1987 are reported under the caption "Other Income and Deductions" on the Statement of Income.

AFUDC variances are generally related to the amount of utility plant under construction not included in rate base. AFUDC was not recognized on disallowed Nine Mile Two plant costs and, for 1988 and 1987, the amount of AFUDC reported reflects such disallowance. Compared to 1987, the lower level of AFUDC for 1988 resulted primarily from the transfer of Nine Mile Two utility plant under construction not included in rate base to plant-in-service in April 1988.

Other Income includes $6.4 million of non-cash earnings in 1987 and $1.7 million in 1989 associated with the amortization of certain customer prepaid Nine Mile Two financing costs which had been deferred, as discussed under the heading New York State Public Service Commission (PSC). Other Income in 1988 and 1989 resulted mainly from interest income on temporary cash investments.

As a result of both the mandatory and optional redemption of certain high-cost first mortgage bonds, long-term debt interest expense over the three-year period 1987-1989 has declined, despite the issuance of additional long-term debt during this period.

Earnings/Summary

Presented below is a table which summarizes the Company's common stock earnings in total and on a per-share basis as reported and as modified to exclude disallowed Nine Mile Two costs written off in 1987 and 1989 and to exclude applicable AFUDC.

The Company has paid a quarterly dividend on its Common Stock at the rate of $.375 per share since the fourth quarter of 1987. On December 20, 1989 the Company announced a dividend increase to $.39 per share of Common Stock payable in January 1990. The Company believes this new quarterly dividend rate of $.39 is sustainable. Future dividend payments, however, are necessarily dependent on future earnings, financial requirements and other factors.

Earnings Summary

	Earnings (Thousands of Dollars)	Shares[1] (Thousands)	Earnings per Share
1989			
As Reported	$ 65,419	31,090	$ 2.10
Excluding Nine Mile Two Write-Off Adjustment	$ 66,819[2]	31,090	$ 2.15
1988			
As Reported	$ 68,766	30,513	$ 2.25
1987			
As Reported	$(176,858)	29,728	$(5.95)
Excluding Nine Mile Two Write-Off	$ 63,042[2]	29,728	$ 2.12

[1]Weighted average shares outstanding.
[2]Reported earnings modified to exclude disallowed Nine Mile Two costs written off in 1987 and 1989 and to exclude AFUDC on these costs in 1987. See Note 10 of the Notes to Financial Statements.

FINANCIAL REPORTS

Table of Contents — *Page*

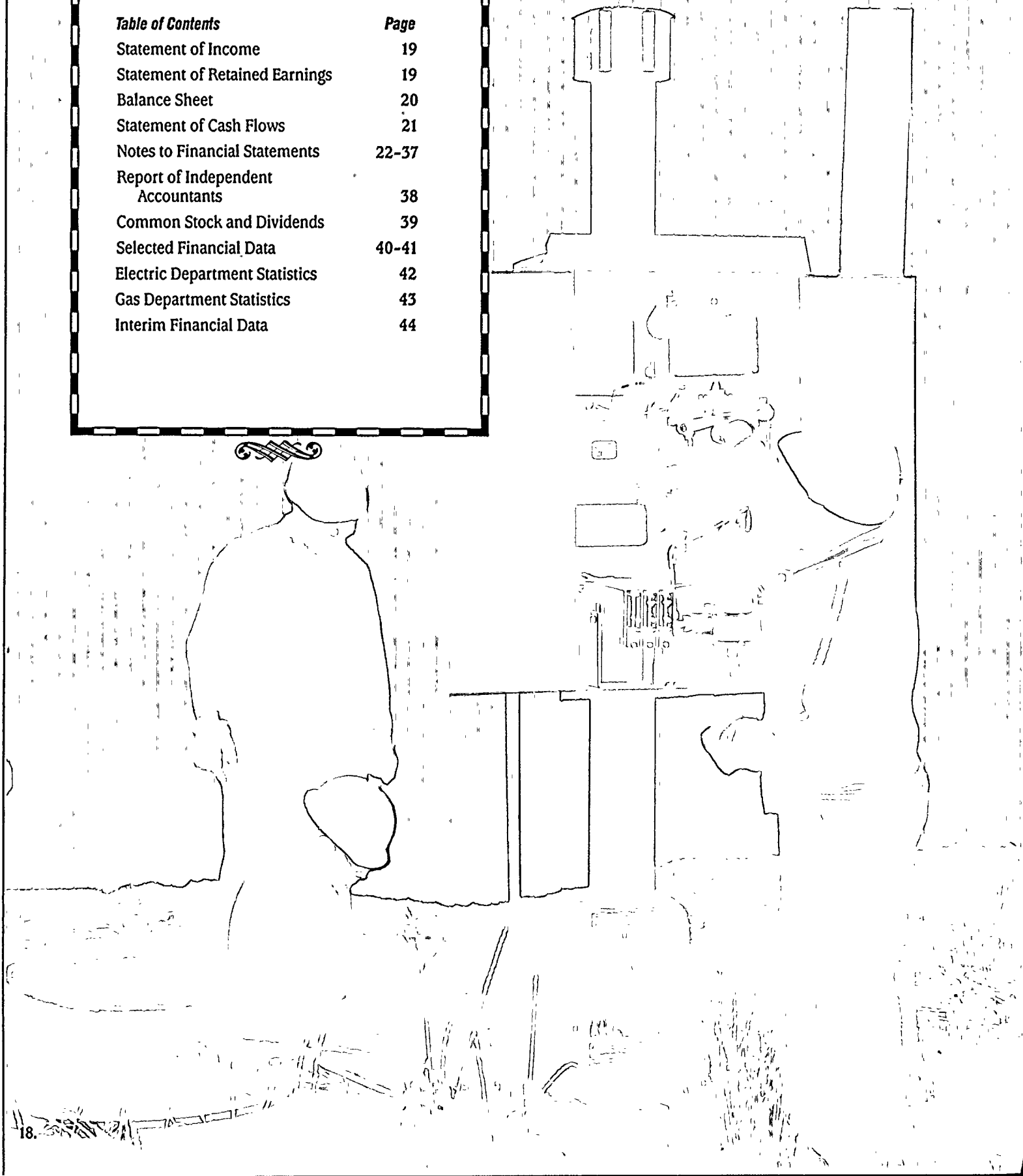

STATEMENT OF INCOME

(Thousands of Dollars) Year Ended December 31	1989	1988*	1987*
Operating Revenues			
Electric	$543,096	$514,637	$489,366
Gas	264,573	231,217	218,408
	807,669	745,854	707,774
Electric sales to other utilities	38,028	29,966	26,215
Total Operating Revenues	845,697	775,820	733,989
Operating Expenses			
Fuel Expenses			
Fuel for electric generation	75,873	65,787	61,443
Purchased electricity	39,645	30,299	26,467
Gas purchased for resale	152,623	129,596	124,086
Total Fuel Expenses	268,141	225,682	211,996
Operating Revenues Less Fuel Expenses	577,556	550,138	521,993
Other Operating Expenses			
Operations excluding fuel expenses	173,764	159,689	159,170
Maintenance	64,316	52,575	46,124
Depreciation and amortization	75,063	69,703	55,530
Taxes—local, state and other	95,341	88,635	82,869
Federal income tax	37,839	40,662	55,925
Total Other Operating Expenses	446,323	411,264	399,618
Operating Income	131,233	138,874	122,375
Other Income and Deductions			
Allowance for other funds used during construction	2,261	2,047	5,030
Federal income tax	1,439	1,683	17,520
Disallowed project costs	(2,100)	—	(55,860)
Other, net	8,328	6,901	8,831
Total Other Income and Deductions	9,928	10,631	(24,479)
Income Before Interest Charges	141,161	149,505	97,896
Interest Charges			
Long term debt	68,628	72,270	73,489
Other, net	3,115	2,898	2,814
Allowance for borrowed funds used during construction	(2,026)	(1,777)	(2,696)
Total Interest Charges	69,717	73,391	73,607
Income Before Cumulative Effect of Accounting Change	71,444	76,114	24,289
Cumulative Effect for Years Prior to 1987 of Accounting Change for Disallowed Costs (less related Federal income tax benefits of $65,000)	—	—	(193,000)
Net Income (Loss)	71,444	76,114	(168,711)
Dividends on Preferred Stock	6,025	7,348	8,147
Earnings (Loss) Applicable to Common Stock	$ 65,419	$ 68,766	$(176,858)
Weighted Average Number of Shares for Period (000's)	31,090	30,513	29,728
Earnings (Loss) per Common Share			
—Before Cumulative Effect of Accounting Change	$2.10	$2.25	$ .54
—Cumulative Effect of Accounting Change	—	—	(6.49)
Total	$2.10	$2.25	$(5.95)

STATEMENT OF RETAINED EARNINGS

(Thousands of Dollars) Year Ended December 31	1989	1988	1987
Balance at Beginning of Period	$ 39,710	$ 17,617	$ 249,505
Add			
Net Income (Loss)	71,444	76,114	(168,711)
Total	111,154	93,731	80,794
Deduct			
Dividends declared on capital stock			
Cumulative preferred stock	6,025	7,348	8,147
Common stock	47,146	45,832	55,030
Preferred stock redemption	—	841	—
Total	53,171	54,021	63,177
Balance at End of Period	$ 57,983	$ 39,710	$ 17,617

The accompanying notes are an integral part of the financial statements.
*Reclassified for comparative purposes. (See Note 1 of the Notes to the Financial Statements.)

BALANCE SHEET

(Thousands of Dollars) At December 31	1989	1988
Assets		
Utility Plant		
Electric	$1,609,338	$1,558,001
Gas	286,104	272,377
Common	93,794	86,523
Nuclear fuel	218,922	206,021
	2,208,158	2,122,922
Less: Accumulated depreciation	567,260	507,948
Nuclear fuel amortization	163,361	145,928
	1,477,537	1,469,046
Construction work in progress	68,784	41,044
Net Utility Plant	1,546,321	1,510,090
Current Assets		
Cash and cash equivalents	10,183	73,031
Accounts receivable, net of allowance for doubtful accounts: 1989—$2,717; 1988—$5,526	80,799	63,728
Unbilled revenue receivable	60,194	45,853
Materials and supplies, at average cost		
Fossil fuel	13,089	8,220
Construction and other supplies	10,978	9,178
Prepayments	13,284	11,303
Total Current Assets	188,527	211,313
Deferred Debits		
Sterling project property loss	3,221	10,537
Unamortized debt expense	11,075	13,072
Deferred finance charges—Nine Mile project	42,947	44,656
Other	45,486	33,750
Total Deferred Debits	102,729	102,015
Total Assets	$1,837,577	$1,823,418
Capitalization and Liabilities		
Capitalization		
Long term debt—mortgage bonds	$ 622,727	$ 651,076
—promissory notes	141,900	141,900
Preferred stock redeemable at option of Company	67,000	67,000
Preferred stock subject to mandatory redemption	30,000	30,000
Common shareholders' equity		
Common stock	513,560	504,907
Retained earnings	57,983	39,710
Total Common Shareholders' Equity	571,543	544,617
Total Capitalization	1,433,170	1,434,593
Long Term Liability—Department of Energy	55,502	51,016
Current Liabilities		
Long term debt due within one year	25,250	34,750
Accounts payable	51,352	37,031
Dividends payable	13,700	13,054
Taxes accrued	13,411	5,992
Interest accrued	15,281	15,652
Pension costs accrued	1,084	1,885
Other	17,111	17,869
Total Current Liabilities	137,189	126,233
Deferred Credits and Other Liabilities		
Accumulated deferred income taxes	137,192	117,345
Deferred unbilled revenue	14,123	39,780
Deferred finance charges—Nine Mile project	42,947	44,656
Other	17,454	9,795
Total Deferred Credits and Other Liabilities	211,716	211,576
Commitments and Other Matters (Notes 10 and 11)		
Total Capitalization and Liabilities	$1,837,577	$1,823,418

The accompanying notes are an integral part of the financial statements.

STATEMENT OF CASH FLOWS

(Thousands of Dollars) Year Ended December 31	1989	1988	1987
Cash Flow from Operations			
Net income (loss)	$ 71,444	$ 76,114	$(168,711)
Adjustments to reconcile net income to net cash provided from operating activities:			
Depreciation and amortization	75,063	69,703	55,530
Amortization of nuclear fuel	21,923	19,945	20,678
Deferred fuel—electric	(3,287)	(1,020)	(151)
Deferred income taxes, net	19,847	28,124	4,984
Allowance for funds used during construction	(4,287)	(3,824)	(7,726)
Disallowed project costs—Nine Mile plant	2,100	—	248,860
Unbilled revenue, net	(37,542)	(8,528)	—
Changes in certain current assets and liabilities:			
Accounts receivable	(17,071)	(10,019)	746
Receivable under Nine Mile cotenant agreement	—	40,600	—
Materials and supplies—fossil fuel	(4,869)	1,487	3,444
—construction and other supplies	(1,800)	1,366	527
Taxes accrued	7,419	2,569	7,105
Accounts payable	14,321	4,724	5,014
Interest accrued	(371)	(270)	1,686
Other current assets and liabilities, net	(209)	(3,928)	5,891
Other, net	(2,262)	(6,644)	(4,972)
Total Operating	$ 140,419	$ 210,399	$ 172,905
Cash Flow from Investing Activities			
Utility Plant			
Plant additions	$(112,034)	$ (96,439)	$(110,139)
Nuclear fuel additions	(12,901)	(17,972)	(18,552)
Less: Allowance for funds used during construction	4,287	3,824	7,726
Additions to Utility Plant	(120,648)	(110,587)	(120,965)
Sterling project property loss	(1,604)	(95)	17,023
Other, net	683	(1,056)	(436)
Total Investing	$(121,569)	$(111,738)	$(104,378)
Cash Flow from Financing Activities			
Proceeds from:			
Sale of common stock	$ 8,761	$ 11,189	$ 16,268
Sale of preferred stock	—	—	30,000
Sale of long term debt, mortgage bonds	—	25,500	75,000
Sale of long term debt, promissory notes	—	—	50,000
Net borrowings (repayments) under:			
Short term debt, net	—	—	(18,000)
Retirements of:			
Preferred stock	—	(22,758)	(23,462)
Long term debt	(37,833)	(45,833)	(67,750)
Capital stock expense	(108)	8	(1,993)
Discount and expense of issuing long term debt	(237)	(496)	(4,476)
Dividends paid on preferred and common stock	(52,525)	(53,423)	(67,949)
Other, net	244	37	203
Total Financing	$ (81,698)	$ (85,776)	$ (12,159)
Increase (decrease) in cash and cash equivalents	$ (62,848)	$ 12,885	$ 56,368
Cash and cash equivalents at beginning of year	$ 73,031	$ 60,146	$ 3,778
Cash and cash equivalents at end of year	$ 10,183	$ 73,031	$ 60,146

SUPPLEMENTAL DISCLOSURE OF CASH FLOW INFORMATION

(Thousands of Dollars) Year Ended December 31	1989	1988	1987
Cash Paid During the Year			
Interest paid (net of capitalized amount)	$ 67,716	$ 71,124	$ 62,175
Income taxes paid	$ 10,996	$ 10,521	$ 22,404

The accompanying notes are an integral part of the financial statements.

NOTES TO FINANCIAL STATEMENTS

Note 1. Summary of Accounting Principles

General.

The Company is subject to regulation by the Public Service Commission of the State of New York (PSC) under New York statutes and by the Federal Energy Regulatory Commission (FERC) as a licensee and public utility under the Federal Power Act. The Company's accounting policies conform to generally accepted accounting principles as applied to New York State public utilities giving effect to the rate-making and accounting practices and policies of the PSC.

In December 1986, the Financial Accounting Standards Board (FASB) issued its Statement of Financial Accounting Standards No. 90 (SFAS-90) with respect to, among other things, the financial accounting for disallowed costs of recently completed plants. Under SFAS-90, a loss must be recognized when it becomes probable that some portion of the costs of the plant will be disallowed for rate-making purposes and a reasonable estimate of the amount of the disallowance can be made. SFAS-90 was generally effective beginning in 1988 with earlier application encouraged, but applied to plant costs disallowed prior thereto. The Company elected to adopt SFAS-90 in the third quarter of 1987 for its investment in Nine Mile Point Nuclear Plant Unit No. 2 (Unit 2).

In adopting SFAS-90, the Company presented the cumulative effect of the accounting change prior to January 1, 1987 in the Statement of Income rather than restate previously issued financial statements. Refer to Note 10 for additional information.

In November 1987, the FASB issued SFAS-95, which established a Statement of Cash Flows that replaced the Statement of Changes in Financial Position. This new standard was adopted by the Company in 1988. For comparative purposes, the Company has retroactively applied the provisions of SFAS-95 to 1987. For purposes of this statement, the Company considers cash equivalents to be short-term investments of three months or less.

In June 1988, the Board of Directors authorized the creation of Utilicom, Inc. as a wholly owned subsidiary. Utilicom develops and markets computer software to assist customers in complying with state and federal environmental and safety regulations. The subsidiary activity has to date remained insignificant.

A description of the Company's principal accounting policies follows.

Rates and Revenue.

Revenue is recorded on the basis of meters read. In addition, beginning in July 1988, as part of a PSC rate decision, the Company commenced recording an estimate of unbilled revenue for service rendered subsequent to the meter read date through the end of the accounting period. The rate order authorized recording of approximately $42 million in revenue during the period July 1988 to July 1990, in lieu of actually increasing customer rates. Total Company revenues were increased in 1989 and 1988 approximately $20.5 million and $8.5 million respectively. Also, as part of the 1988 rate decision, the Company began in 1989 recording the net change in the estimated unbilled revenue at the end of the accounting period.

Tariffs for electric and gas service include fuel cost adjustment clauses which adjust the rates monthly to reflect changes in the actual average cost of fuels. The electric fuel adjustment provides that ratepayers and the Company will share the effects of any variation from forecast monthly unit fuel costs on an 80%/20% basis up to a $2.6 million cumulative, after tax, annual gain or loss to the Company. Thereafter, 100 percent of additional fuel clause adjustment amounts are assigned to customers. There is also an 80%/20% sharing of variances in gains or losses from PSC established forecast amounts related to margins on electricity sales to other electric utilities. For the rate year ending July 1990, this sharing process limits any after tax loss to the Company to $2.3 million. In addition, there is a similar 80%/20% sharing process of variances from forecasted revenues derived from sales to large gas customers that can use alternate fuels. This process limits any loss to the Company to $1 million pretax per year if these customers utilize their alternative fuels.

The gas department tariffs provide a separate but equivalent rate, excluding the cost of gas, to reflect charges for the transportation of privately owned gas through the Company's facilities.

Deferred Fuel Costs.

The Company practices fuel cost deferral accounting whereby fuel costs which are recoverable under the electric and gas cost adjustment clauses included in the tariff schedules of the Company are deferred until they are billed to customers. In conjunction with the adoption of recording unbilled revenue, deferred fuel expenses for prior

years have been reclassified from operating expense to revenue. A reconciliation of recoverable gas costs with gas revenues is done annually as of August 31, and the excess or deficiency is refunded to or recovered from the customers during a subsequent twelve-month period.

Utility Plant, Depreciation and Amortization.

The cost of additions to utility plant and replacement of retirement units of property is capitalized. Cost includes labor, material, and similar items, as well as indirect charges such as engineering and supervision, and is recorded at original cost. See Note 10 for discussion of Unit 2. The Company capitalizes an allowance for funds used during construction approximately equivalent to the cost of capital devoted to plant under construction that is not included in its rate base. Replacement of minor items of property is included in maintenance expenses. Costs of depreciable units of plant retired are eliminated from utility plant accounts, and such costs, plus removal expenses, less salvage, are charged to accumulated depreciation and amortization.

Depreciation in the financial statements is provided on a straight-line basis at rates based on the estimated useful lives of property, which have resulted in provisions of 3.4%, 3.6% and 3.6% per annum of average depreciable property in 1989, 1988 and 1987 respectively. Amortization includes $7.3 million in 1989, $8.6 million in 1988 and $6.5 million in 1987 related to the Sterling project property loss.

Nuclear Fuel Disposal Costs.

The Nuclear Waste Policy Act (Act) of 1982, as amended, requires the United States Department of Energy (DOE) to establish a nuclear waste disposal site and to take title to nuclear waste. A permanent DOE high-level nuclear waste repository is not expected to be operational until the year 2010. The Act provides for a determination of the fees collectible by the DOE for the disposal of nuclear fuel irradiated prior to April 7, 1983 and for three payment options. The option of a single payment to be made at any time prior to the first delivery of fuel to the DOE was selected in June 1985. The Company estimates the fees, including accrued interest, owed to the DOE to be approximately $55.5 million at December 31, 1989. The Company is being allowed by the PSC to collect in rates an amount sufficient for the disposal of nuclear fuel irradiated prior to April 7, 1983. The estimated fees are classified as a long-term liability and interest is accrued at the current three-month Treasury bill rate, adjusted quarterly. The Act also provides for the disposal of nuclear fuel irradiated after April 6, 1983, in exchange for a charge of one mill ($.001) per KWH generated at nuclear plants. This charge is currently being collected from customers and paid to the DOE pursuant to PSC authorization.

Nuclear Decommissioning Costs.

Decommissioning costs (costs to take the plant out of service in the future) for the Company's Ginna Nuclear Plant are estimated by the PSC to be approximately $179.1 million in the year 2006 when the permanent license expires, and the Company's 14% share of Unit 2's decommissioning costs are estimated to be approximately $135.4 million at license expiration in the year 2026. Through December 31, 1989, the Company has accrued and recovered in rates $25.7 million for this purpose and is currently accruing additions to an internal sinking fund at a rate of approximately $3.6 million per year based on a graduated revenue requirement methodology adopted by the PSC.

The decommissioning costs, which form the basis for current accruals, were derived from the record of the Company's prior rate proceeding (PSC Opinion 88-21, issued July, 1988). These costs are subject to revision in the rate application currently before the PSC.

Based on a Nuclear Regulatory Commission ruling, the Company anticipates that future decommissioning reserves will utilize a combination of internal and external sinking funds. (See Note 11.)

Allowance for Funds Used During Construction.

The Company capitalizes an Allowance for Funds Used During Construction (AFUDC) based upon the net cost of borrowed funds for construction purposes, and a reasonable rate upon the Company's other funds when so used. In accordance with an order issued by the FERC, AFUDC is segregated into two components and classified in the Statement of Income as Allowance for Borrowed Funds Used During Construction, an offset to Interest Charges, and Allowance for Other Funds used During Construction, a part of Other Income.

Effective July 16, 1984, pursuant to PSC authorization, the Company discontinued accruing AFUDC on $50 million of construction work in progress related to its investment in Unit 2 for which a cash return was being allowed through its inclusion in rate base. An additional $150 million and $230 million were included in rate base,

effective July 9, 1985 and July 14, 1986, respectively, as authorized by the PSC, and AFUDC accruals were likewise discontinued. The PSC also ordered in 1984 that amounts be accumulated in deferred debit and credit accounts equal to the amount of AFUDC which was no longer accrued. The balance in the deferred credit account would be available to reduce future revenue requirements over a period substantially shorter than the life of Unit 2, and the balance in the deferred debit account would then be collected from customers over a longer period of time. In July 1988, in accordance with PSC Opinion 88-21, the Company eliminated by offset one-half of the deferred debit and credit balances in connection with the unused portion of customer prepaid financing costs associated with Unit 2 (See Note 10), reducing the cumulative balance to $44.7 million. In accordance with PSC Opinion 86-17, issued July 14, 1986, $10.875 million of these accruals were amortized over the rate year commencing August 1, 1986. The deferred credit was discharged through the Statement of Income in 1986 and 1987, while the deferred debit was reclassified into a separate deferred debit account. In connection with the Company's 1988 rate settlement, $4.1 million will be amortized through the Statement of Income during the year commencing August 1, 1989.

The gross rates approved by the PSC for purposes of computing AFUDC were: 10.25%, effective January 1, 1988; 10.20% effective August 1, 1987 through December 31, 1987; and 10.60% effective for the seven months ended July 31, 1987. AFUDC on certain major construction projects, however, including Unit 2, was applied in 1988 and 1987 at a reduced rate which is net of the income tax effect of the interest portion of AFUDC. No projects qualified for this rate in 1989. The net-of-tax rates used on these projects for 1988 and 1987 were 8.55% and 8.47%, respectively.

Federal Income Tax.

For income tax purposes, depreciation is computed using the most liberal methods permitted. The resulting tax reductions are offset by provisions for deferred income taxes only to the extent ordered or permitted by regulatory authorities. The cumulative balance of tax deductions not offset by provisions for deferred income taxes through 1989 is approximately $400 million.

The Company provides for full normalization of depreciation and investment tax credits. The Tax Reform Act of 1986 provided for the repeal of investment tax credits; however, some credits continue to be available under the transitional rules contained in the Tax Act.

The Company uses the separate-period approach in calculating the interim quarterly tax provision.

SFAS-96, Accounting for Income Taxes (as amended by SFAS-103), was issued in December of 1987 and has not yet been adopted by the Company. SFAS-96 requires adoption in calendar year 1992 and that a deferred tax liability or asset be adjusted in the period of enactment for the effect of changes in tax laws or rates. Additionally, the Company may also be required to provide deferred taxes for the effect of taxes previously flowed through the Statement of Income. The Company is presently unable to estimate the effects of the adoption of SFAS-96, but the Company does not presently believe the earnings impact to be significant.

Retirement Health Care and Life Insurance Benefits.

The Company provides certain health care and life insurance benefits for retired employees and health care coverage for surviving spouses of retirees. Substantially all of the Company's employees may become eligible for these benefits if they reach retirement age while working for the Company. These and similar benefits for active employees are provided through insurance companies whose premiums are based upon the experience of benefits actually paid. The Company recognizes the costs of providing these benefits by a current charge to expense. The cost of providing these benefits was approximately $2.2 million in 1989 and $1.8 million in 1988 and 1987.

Earnings and Dividends Per Share.

Earnings applicable to each share of common stock are based on the weighted average number of shares outstanding during the respective years. The pro forma per share earnings, assuming the accounting change described in Note 10 was applied retroactively, were $.54 in 1987.

Note 2: Federal Income Taxes

The provision for Federal income taxes is distributed between operating expense and other income based upon the treatment of the various components of the provision in the rate-making process. The following is a summary of income tax expense for the three most recent years.

(Thousands of Dollars)	1989	1988	1987
Charged to operating expense:			
Current	$20,509	$20,363	$ 32,781
Deferred	17,330	20,299	23,144
Total	37,839	40,662	55,925
Charged (Credited) to other income:			
Current	(3,956)	(9,508)	640
Deferred	2,517	7,825	(18,160)
Total	(1,439)	(1,683)	(17,520)
Total Federal income tax expense	$36,400	$38,979	$ 38,405

The following is a reconciliation of the difference between the amount of Federal income tax expense reported in the Statement of Income and the amount computed by multiplying the income by the statutory tax rate.

(Thousands of Dollars)	1989		1988		1987	
	Amount	% of Pretax Income	Amount	% of Pretax Income	Amount	% of Pretax Income
Income before cumulative effect of accounting change	$ 71,444		$ 76,114		$24,289	
Add: Federal income tax expense	36,400		38,979		38,405	
Income before Federal income tax	$107,844		$115,093		$62,694	
Computed tax expense	$ 36,667	34.0	$ 39,132	34.0	$25,078	40.0
Increases (decreases) in tax resulting from:						
Expenses capitalized for financial reporting purposes	–	–	–		(8,337)	(13.3)
Disallowed project costs	–	–	–		15,064	24.0
Difference between tax depreciation and amount deferred	3,646	3.4	1,626	1.4	4,312	6.9
Investment tax credit	(2,853)	(2.6)	(3,763)	(3.2)	(3,701)	(5.9)
Tax Reduction Act benefits deferred	–		–		4,561	7.3
Miscellaneous items, net	(1,060)	(1.0)	1,984	1.7	1,428	2.3
Total Federal income tax expense	$ 36,400	33.8	$ 38,979	33.9	$38,405	61.3

A summary of the deferred amounts charged or (credited) to income is as follows:

(Thousands of Dollars)	1989	1988	1987
Investment tax credit	$ (425)	$ (3,763)	$ (4,619)
Depreciation	25,473	29,519	26,956
Fuel costs	338	2,681	1,086
Sterling abandonment	(3,179)	585	(8,249)
Capitalized overheads	(1,805)	(265)	3,410
Accrued revenue	4,416	(442)	(4,740)
Disallowed project costs	(2,100)	–	(8,960)
Alternative Minimum Tax	(5,016)	(1,513)	–
Revenues Deferred—Nine Mile II	4,604	3,685	(2,530)
Other items	(2,459)	(2,363)	2,630
Total	$19,847	$28,124	$ 4,984

Note 3. Pension Plan

The Company has a defined benefit pension plan covering substantially all of its employees. The benefits are based on years of service and the employee's compensation during the last three years of employment. The Company's funding policy is to contribute annually an amount consistent with the requirements of the Employee Retirement Income Security Act. These contributions are intended to provide for benefits attributed to service to date and for those expected to be earned in the future.

The plan's funded status and amounts recognized on the Company's balance sheet are as follows:

(Millions)	1989	1988
Accumulated benefit obligation, including vested benefits of $200.5 in 1989 and $179.1 in 1988	$212.5*	$191.3*
Projected benefit obligation for service rendered to date	$305.2*	$276.4*
Less—Plan assets at fair value, primarily listed stocks and bonds	362.2	303.8
	(57.0)	(27.4)
Unrecognized net gain or (loss) from past experience different from that assumed and effects of changes in assumptions	64.8	36.4
Less—Prior service cost not yet recognized in net periodic pension cost	.2	.1
Less—Unrecognized net obligation at December 31	6.5	7.0
Prepaid pension cost (pension liability) recognized on the balance sheet	$ (1.1)	$ (1.9)

*Actuarial present value

Net pension cost included the following components:

(Millions)	1989	1988
Service cost—benefits earned during the period	$ 6.4	$ 6.9
Interest cost on projected benefit obligation	23.7	22.5
Actual return on plan assets	(63.5)	(31.0)
Net amortization and deferral	43.1	12.4
Net periodic pension cost	$ 9.7	$ 10.8

The projected benefit obligation at December 31, 1989 and 1988 assumed discount rates of 8¼ percent and 8½ percent, respectively, and a long-term rate of increase in future compensation levels of 7 percent. The assumed long-term rate of return on plan assets was 8 percent. The unrecognized net obligation is being amortized over 15 years beginning January, 1986.

Pension cost for 1989, 1988, and 1987 was $9.7 million, $10.8 million, and $10.7 million, respectively. The PSC has directed the Company to defer for future disposition any differences resulting from the calculation of pension cost pursuant to SFAS-87.

Note 4. Departmental Financial Information

The Company's records are maintained by operating departments, in accordance with PSC accounting policies, giving effect to the rate-making process. The following is the operating data for each of the Company's departments, and no interdepartmental adjustments are required to arrive at the operating data included in the Statement of Income.

(Thousands of Dollars)	1989	1988*	1987*
Electric			
Operating Information			
Operating revenues	$ 581,124	$ 544,603	$ 515,581
Operating expenses, excluding provision for income taxes	445,539	391,887	360,151
Pretax operating income	135,585	152,716	155,430
Provision for income taxes	29,887	34,093	48,788
Net operating income	$ 105,698	$ 118,623	$ 106,642
Other Information			
Depreciation and amortization	$ 65,287	$ 60,444	$ 46,776
Nuclear fuel amortization	$ 21,923	$ 19,945	$ 20,678
Capital expenditures	$ 98,646	$ 91,941	$ 104,295
Investment Information			
Identifiable assets (a)	$1,522,334	$1,469,571	$1,483,860
Gas			
Operating Information			
Operating revenues	$ 264,573	$ 231,217	$ 218,408
Operating expenses, excluding provision for income taxes	231,086	204,397	195,538
Pretax operating income	33,487	26,820	22,870
Provision for income taxes	7,952	6,569	7,137
Net operating income	$ 25,535	$ 20,251	$ 15,733
Other Information			
Depreciation and amortization	$ 9,776	$ 9,259	$ 8,754
Capital expenditures	$ 22,002	$ 18,646	$ 16,670
Investment Information			
Identifiable assets (a)	$ 284,511	$ 257,200	$ 224,391

(a) Excludes cash, unamortized debt expense and other common items.
*Reclassified for comparative purposes (See Note 1).

Note 5. Jointly-Owned Facilities

The following table sets forth the jointly-owned electric generating facilities in which the Company is participating. Both Oswego Fossil Unit No. 6 and Nine Mile Point Nuclear Plant Unit No. 2 have been constructed and are operated by Niagara Mohawk Power Corporation. Each participant must provide its own financing for any additions to the facilities. The Company's share of direct expenses associated with these two units is included in the appropriate operating expenses in the Statement of Income. Allowance for funds used during construction has been excluded from the construction costs presented below. Various modifications will be made throughout the lives of these plants to increase operating efficiency or reliability, and to satisfy changing environmental and safety regulations.

	Oswego Fossil Unit No. 6	Nine Mile Point Nuclear Unit No. 2
Net megawatt capacity	850	1,080
RG&E's share—megawatts	204	151
—percent	24	14
Year of completion	1980	1988
	(Millions of Dollars)	
RG&E's actual construction costs		
—1988	$ 0.6	$ 12.2
—1989	0.7	1.0
Expended by RG&E in prior years	77.4	575.8
	$78.7	$589.0

(Note 5 continued on page 28)

(continued from page 27)

For further information regarding Nine Mile Point Nuclear Plant Unit No. 2 refer to Note 10. Pursuant to Statement of Financial Accounting Standards No. 90, the Company, during 1987 and 1989, recognized disallowances of a portion of the Nine Mile Nuclear Plant Unit No. 2 facility. These disallowances are not included in this table. Also not included are Company costs for initial fuel loading ($13.0 million), common facilities ($20.0 million), operating spare parts, transmission facilities, post-in-service additions, and Company direct costs.

Note 6. Long Term Debt

First Mortgage Bonds

%	Series	Due	(Thousands) Principal Amount December 31 1989	1988
5	S	Oct. 15, 1989	$	$ 12,000
4½	T	Nov. 15, 1991	15,000	15,000
4⅝	U	Sept. 15, 1994	16,000	16,000
5.3	V	May 1, 1996	18,000	18,000
6¼	W	Sept. 15, 1997	20,000	20,000
6.7	X	July 1, 1998	30,000	30,000
8	Y	Aug. 15, 1999	30,000	30,000
9⅛	Z	Sept. 1, 2000	30,000	30,000
9¼	BB	June 15, 2006	50,000	50,000
8⅜	CC	Sept. 15, 2007	50,000	50,000
9½	DD	Dec. 1, 2003	40,000	40,000
6½	EE	Aug. 1, 2009	10,000	10,000
10.95	FF	Feb. 15, 2005	38,500	44,000
12¼	HH	May 15, 2012	10,500	10,500
13⅞	JJ	June 15, 1999	25,000	25,000
11¼	KK	May 15, 1995	49,334	49,667
8.6	LL	Aug. 1, 1993	75,000	75,000
8⅞	MM	May 1, 1992	75,000	75,000
11¾	NN	June 15, 1993	40,000	60,000
8⅜	OO	Dec. 1, 2028	25,500	25,500
			647,834	685,667
Net bond premium (discount)			143	159
Less: Due within one year			25,250	34,750
Total			$622,727	$651,076

The First Mortgage provides security for the bonds through a first lien on substantially all the property owned by the Company (except cash and accounts receivable).

Sinking and improvement fund requirements aggregate $333,540 per annum under the First Mortgage, excluding mandatory sinking funds of individual series. Such requirements may be met by certification of additional property or by depositing cash with the Trustee. The 1988 and 1989 requirements were met with funds deposited with the Trustee, and these funds were used for redemption of outstanding bonds of Series KK.

The Series EE, Series HH and Series OO First Mortgage Bonds equal the principal amount of and provide for all payments of principal, premium and interest corresponding to the Pollution Control Revenue Bonds, Series A, Series B and Series C, respectively (Rochester Gas and Electric Corporation Projects) issued by the New York State Energy Research and Development Authority through a participation agreement with the Company. The Series EE Bonds are subject to a mandatory sinking fund beginning August 1, 2000 and each August 1 thereafter. Nine annual deposits aggregating $3.2 million will be made to the sinking fund, with the balance of $6.8 million principal amount of the bonds becoming due August 1, 2009.

The Series FF First Mortgage Bonds are subject to a mandatory sinking fund of $2.75 million annually which began on February 15, 1986 and will continue each February 15, with the noncumulative option to double the payment in any year up to a maximum of 5 years. In February 1988, 1989 and 1990, the Company exercised this option and redeemed an additional $2.75 million of Series FF Bonds in each year.

[1]The Series JJ First Mortgage Bonds are subject to a mandatory sinking fund of $2.5 million annually beginning June 15, 1990 and each June 15 thereafter.

The Series LL and MM First Mortgage Bonds are not redeemable prior to maturity.

Sinking fund requirements and bond maturities for the next five years are:

(Thousands)	1990	1991	1992	1993	1994
Series NN	$20,000	$20,000			
Series FF	2,750	2,750	$2,750	$2,750	$2,750
Series JJ	2,500	2,500	2,500	2,500	2,500
Series T		15,000			
Series MM			75,000		
Series LL				75,000	
Series U					16,000
	$25,250	$40,250	$80,250	$80,250	$21,250

Promissory Notes

Issued	Due	(Thousands) December 31 1989	1988
November 15, 1984	October 1, 2014	$ 51,700	$ 51,700
December 5, 1985	November 15, 2015	40,200	40,200
July 22, 1987	July 15, 2027	50,000	50,000
Total		$141,900	$141,900

The Company is obligated to make payments of principal, premium and interest on each Promissory Note which correspond to the payments of principal, premium, if any, and interest on certain Pollution Control Revenue Bonds issued by the New York State Energy Research and Development Authority (NYSERDA) as described below. These obligations under each note shall be deemed satisfied to the extent of funds drawn under certain Letters of Credit discussed below. Any amounts advanced under such Letters of Credit must be repaid, with interest, by the Company.

The $51.7 million Promissory Note was issued in connection with NYSERDA's Floating Rate Monthly Demand Pollution Control Revenue Bonds (Rochester Gas and Electric Corporation Project), Series 1984. This obligation shall be deemed satisfied to the extent of the funds, if any, drawn on or before October 15, 1994 under an irrevocable Letter of Credit issued by The Bank of New York (formerly Irving Trust Company). The interest rate on this note for each monthly interest payment period will be based on the evaluation of the yields of short term tax-exempt securities at par having the same credit rating as said Series 1984 Bonds. The average interest rate was 6.14% for 1989, 5.22% for 1988 and 5.04% for 1987.

The $40.2 million Promissory Note was issued in connection with NYSERDA's Adjustable Rate Pollution Control Revenue Bonds (Rochester Gas and Electric Corporation Project), Series 1985. This obligation shall be deemed satisfied to the extent of funds, if any, drawn on or before November 30, 1992 under an irrevocable Letter of Credit issued by Westpac Banking Corporation. This Promissory Note bore interest at 6½% per annum through November 14, 1988. The interest rate was adjusted to 5.90% effective November 15, 1988 through November 14, 1989 and to 6.15% effective November 15, 1989 through November 14, 1990. Thereafter, the interest rate may be adjusted annually or converted to a fixed rate.

The $50.0 million Promissory Note was issued in connection with NYSERDA's Adjustable Rate Pollution Control Revenue Bonds (Rochester Gas and Electric Corporation Project), Series 1987. This obligation shall be deemed satisfied to the extent of funds, if any, drawn on or before July 31, 1992 under an irrevocable Letter of Credit issued by Citibank, N.A. This Promissory Note will bear interest at 5⅞% per annum through July 14, 1990. Thereafter, the interest rate may be adjusted annually or converted to a fixed rate.

Note 7. Preferred and Preference Stock

Type, by Order of Seniority	Par Value	Shares Authorized	Shares Outstanding
Preferred Stock (cumulative)	$100	2,000,000	970,000*
Preferred Stock (cumulative)	25	4,000,000	
Preference Stock	1	5,000,000	

*See below for mandatory redemption requirements

No shares of preferred or preference stock are reserved for employees, or for options, warrants, conversions, or other rights.

A. Preferred Stock, not subject to mandatory redemption:

%	Series	Shares Outstanding December 31, 1989	(Thousands) December 31 1989	1988	Redemption (per share)#
4	F	120,000	$12,000	$12,000	$105
4.10	H	80,000	8,000	8,000	101
4¾	I	60,000	6,000	6,000	101
4.10	J	50,000	5,000	5,000	102.5
4.95	K	60,000	6,000	6,000	102
4.55	M	100,000	10,000	10,000	101
7.50	N	200,000	20,000	20,000	102
Total		670,000	$67,000	$67,000	

#May be redeemed at any time at the option of the Company on 30 days minimum notice, plus accrued dividends in all cases

B. Preferred Stock, subject to mandatory redemption:

%	Series	Shares Outstanding December 31, 1989	(Thousands) December 31 1989	1988	Redemption (per share)+
8.25	R	300,000	$30,000	$30,000	$108.25 Before 3/1/92

+Thereafter at lesser rates

Mandatory redemption of 60,000 shares per year commences on March 1, 1993 for Series R. In the event the Company should be in arrears in the sinking fund requirement, the Company may not redeem or pay dividends on any stock subordinate to the Preferred Stock.

Note 8. Common Stock

At December 31, 1989, there were 35,000,000 shares of $5 par value Common Stock authorized, of which 31,257,968 were outstanding. No shares of Common Stock are reserved for options, warrants, conversions, or other rights. Net gains or losses resulting from the reacquisition of certain issues of preferred stock to satisfy sinking fund requirements in 1987 and 1988 are shown as Reacquired Capital Stock.

Common Stock:	Per Share	Shares Outstanding	Amount (Thousands)
Balance, January 1, 1987		29,247,087	$479,704
Automatic Dividend Reinvestment and Stock Purchase Plan	15.175-24.750	760,986	14,132
Employee Stock Ownership Plan	23.970	17,939	430
Savings Plus Plan	14.499-24.874	95,363	1,706
Capital Stock Expense			(1,993)
Reacquired Capital Stock			39
Balance, December 31, 1987		30,121,375	$494,018
Automatic Dividend Reinvestment and Stock Purchase Plan	15.963-18.013	619,172	10,440
Savings Plus Plan	16.000-17.188	45,264	749
Capital Stock Expense			8
Reacquired Capital Stock			(308)
Balance, December 31, 1988		30,785,811	$504,907
Automatic Dividend Reinvestment and Stock Purchase Plan	17.288-20.913	472,157	8,761
Capital Stock Expense			(108)
Balance, December 31, 1989		31,257,968	$513,560

Note 9. Short Term Debt

The Company had no outstanding short term debt at December 31, 1989 or December 31, 1988, and there were no borrowings in the calendar years 1989 or 1988.

On December 1, 1988 the Company renewed its $90 million revolving credit facility for a period of three years. In December 1989 the Company requested and was granted a one year extension of the commitment termination date to December 31, 1992. Commitment fees related to this facility amounted to $168,000 in 1989 and $322,000 in 1988.

The Company's Charter provides that unsecured debt may not exceed 15 percent of the Company's total capitalization (excluding unsecured debt). As of December 31, 1989, the Company would not be able to incur unsecured debt under this provision. In order to be able to use its revolving credit agreement, the Company has created a subordinate mortgage which secures borrowings under its revolving credit agreement that might otherwise be restricted by this provision of the Company's Charter.

Note 10. Nine Mile Point Nuclear Plant

Nine Mile Point Nuclear Plant Unit No. 2 (Unit 2), a nuclear generating unit in Oswego County, New York, with an electrical capability of 1,080 megawatts, was completed and entered commercial service in Spring 1988. Niagara Mohawk Power Corporation (Niagara) is operating Unit 2 on behalf of all owner co-tenants pursuant to a full power operating license which the Nuclear Regulatory Commission (NRC) issued on July 2, 1987 for a 40-year term beginning October 31, 1986. Under arrangements dating from September 1975, ownership, output, and cost of the project are shared by five co-tenants: the Company (14%), Niagara (41%), Long Island Lighting Company (LILCO) (18%), New York State Electric & Gas Corporation (NYSEG) (18%) and Central Hudson Gas & Electric Corporation (9%). In mid-1989, the five owner companies concluded negotiations on a revised operating agreement which superseded, effective August 22, 1989, the original 1975 version. Under the revised agreement, Niagara continues as operator of Unit 2, but all five owners share certain policy, budget and managerial oversight functions. As part of the agreement, they are studying the feasibility of establishing a separate operating entity at the Nine Mile Point site.

The NRC advised Niagara on December 20, 1988, following their senior managers' biannual performance review of NRC-licensed nuclear power plants, that Unit 2 warrants close monitoring by the NRC. Plants in this category have been identified as having weaknesses that warrant increased NRC attention. This conclusion was based on an NRC assessment of Unit 2's overall performance during its first year of operation. Nine Mile Point Nuclear Plant Unit No.I (Unit 1), an adjoining facility entirely owned and operated by Niagara, had been categorized in June 1988 as requiring close monitoring by the NRC. In its December 1988 evaluation, the NRC indicated that increased licensee and NRC management attention is needed to ensure that performance improvement is achieved for both units. In its June 1989 and January 1990 reviews of operating reactors, the NRC continued to list Units 1 and 2 in its category of plants it would monitor closely.

In November 1989, the Institute of Nuclear Power Operations (INPO), an industry sponsored oversight group, performed an evaluation of Units 1 and 2. INPO reported deficiencies in several key areas related to monitoring devices, operator performance in the training simulator, and supervision of maintenance practices. A number of these issues had been previously noted and were being corrected or improved by Niagara. Niagara is preparing its responses and a Corrective Action Program with respect to the INPO findings.

A series of occurrences cumulatively kept Unit 2 from operating at a sustained, high level of performance during much of 1989. Extension of the Fall 1988 mid-cycle outage into 1989 and discovery of a problem in Unit 2's service water system combined to delay the return of Unit 2 to service until early April. Unit 2 then ran well through the spring and summer, achieving a period of 135 consecutive days at or near full power. Since then, however, operation has been sporadic due to several unrelated equipment problems at the facility. Unit 2's cumulative net capacity factor for 1989 was 45.5%.

Plant staff has utilized these unscheduled outages to perform surveillance testing originally scheduled for a Spring 1990 refueling outage which may enable the refueling outage to be deferred until Fall 1990. However, NRC concurrence for postponement of certain testing, or additional planned outages, would be required to delay the refueling outage until that time.

Although recent operating experience shows that the operating performance of many U.S. commercial nuclear reactors of the size and type of Unit 2 is below the average for all plants, the trend for the group, as well as for all plants, is toward improved performance. The Company believes that the events which affected the operating performance of Unit 2 in 1989 are not indicative of longer-term performance, and that the operating performance of Unit 2 will improve consistent with industry experience.

Niagara's cost estimate for the construction of Unit 2, announced in January 1988, was $6.120 billion, excluding nuclear fuel. Adding approximately $413 million of prepaid financing charges arising from the inclusion of construction work in progress in the rate bases of certain co-tenants, that sum is equivalent to a total Unit 2 construction cost of $6.533 billion. The Company's estimated share of that $6.533 billion total Unit 2 construction cost, including its applicable share of prepaid financing costs, was approximately $951 million ($591 million of construction costs, $258 million of Allowance for Funds Used During Construction [AFUDC] and $102 million of prepaid financing costs). At December 31, 1989, excluding the effects of adoption of a new accounting standard for the reporting of disallowed costs of recently completed plants (discussed below), the Company had incurred construction-related costs of $930 million ($589 million of construction costs, $245 million of AFUDC and $96 million of prepaid financing costs).

Certain of those costs, however, were disallowed for ratemaking purposes. In October 1986, the PSC approved a

settlement (the "Settlement") with the co-tenants of its proceeding to inquire into the prudence of costs incurred for the construction of Unit 2. The Settlement provided that, whatever the final construction cost of Unit 2, the aggregate amount allowed in the co-tenant rate bases would be $4.16 billion, reduced by prepaid financing costs. It also barred suits among the co-tenants based on Unit 2 design, engineering and construction. In order to gain its four co-tenants' concurrence to limiting the aggregate rate base allowance for Unit 2 to the $4.16 billion level, Niagara undertook to reimburse each of them for its proportionate share of the difference between that figure and one of $4.45 billion to which the PSC Staff and all co-tenants had earlier agreed. Accordingly, in September 1988, Niagara paid the Company $40.6 million.

In a series of rate orders preceding commercial operation of Unit 2, the PSC permitted most of the Company's $485 million allowed investment (its share of $4.16 billion, less prepaid financing charges) to be reflected in its rates. The PSC has fixed April 5, 1988 as the Unit 2 commercial operation date for other co-tenants, but it has not yet taken formal action on the subject with respect to the rates and accounts of the Company. The Company's rate case settlement, which the PSC approved on July 20, 1988, utilized a hypothetical date of April 15, 1988 for Unit 2 commercial operation, but contemplated that an actual commercial operation date would be separately adopted.

Despite the Settlement and the PSC October 1986 order approving it, the co-tenants and PSC Staff have disagreed on its implementation and interpretation in several separate proceedings. In one proceeding stemming from a Niagara rate case, the PSC disallowed costs for certain common facilities and certain other costs the co-tenants considered outside the scope of the Settlement. The Company's investment in these items at project completion was estimated to be approximately $20 million. In subsequent rate cases of some of the co-tenants, the Staff of the PSC has argued that certain post-in-service capital additions for Unit 2, estimated at $13 million for the Company, should be considered as falling under the scope of the Settlement cap and should not be afforded rate base treatment. The co-tenants disagreed with the Staff's interpretation and vigorously opposed it. The PSC also determined that the entire amount of disallowed costs will be recognized as a write-off to common equity for ratemaking purposes. On July 10, 1987, the co-tenants commenced an action in State Supreme Court, Albany County, seeking review of the PSC decision on the settlement implementation issues. In August 1987, the case was transferred to the Appellate Division, Third Department, and is pending.

Other parties are also challenging the PSC's October 1986 order approving the Settlement. That appeal has also been transferred to the Appellate Division, Third Department, of State Supreme Court. Failure of the Settlement order to survive judicial challenge could result in the resumption of the PSC inquiry into the prudence of Unit 2 construction costs. It could also precipitate reinstatement of earlier PSC orders, superseded by the Settlement, which had adopted an incentive plan that limits rate recovery to 80% of those revenue requirements necessary to support Unit 2 capital costs exceeding $4.6 billion and then imposed a $5.4 billion cost cap on prudently incurred Unit 2 costs eligible for recovery through rates.

Negotiations have been taking place between the Nine Mile Two co-tenants, the PSC Staff and other parties to resolve these outstanding issues discussed in the preceding paragraphs. On January 24, 1990, an oral agreement was reached to resolve all open Unit 2 ratemaking issues with respect to the construction of Unit 2 and its operation through January 19, 1990, including a petition by the Attorney General of the State of New York seeking disallowance of some utility replacement power costs associated with the Fall 1988 Unit 2 outage and including pending Article 78 proceedings referenced above. The net impact upon the Company of this agreement is an additional estimated write-off of $1.4 million, or $.05 per share, recognized in December of 1989. This write-off reflects, and is net of, income tax effects and the current recognition of all of the benefits to which the Company is entitled under the co-tenants' settlement with General Electric Company (see below).

The Company is not able to provide an assurance that the agreement discussed in the preceding paragraph will result in a written settlement proposal to the PSC, although it believes it probable that such will occur. The Company cannot give any assurance that, if a written settlement proposal is submitted, the PSC will approve it. The Company does not expect at this time any further write-offs pertaining to Unit 2.

In September 1987, the Company adopted SFAS-90 and recognized a net loss of $262 million from the disallowance arising from the Settlement. In adopting SFAS-90, the Company presented the cumulative effect of the accounting change prior to January 1, 1987 in the Statement of Income and did not restate previously issued annual financial statements. In 1989, the Company recognized an additional net loss of $1.4 million as described above. The cumulative net loss is comprised of:

(Note 10 continued on page 34)

(continued from page 33)

		(Dollars In Millions)
Cumulative Effect of Accounting Change		$258
Less Related Federal Income Tax Benefits		(65)
Net Effect Prior to January 1, 1987		193
AFUDC Accrued in 1987 on Disallowed Project Costs		22
Additional Disallowed Plant Costs		
Recognized in 1987	$56	
Less—Related Federal Income Tax Benefits	(9)	
		47
Net Effect in 1987		69
Net Loss Recognized in Calendar 1987		262
Additional Disallowed Plant Costs		
Recognized in 1989	$ 2	
Less—Related Federal Income Tax Benefits	(1)	
Net Loss Recognized in Calendar 1989		1
Net Cumulative Disallowance		$263

Earnings information for 1989, 1988 and 1987 modified to exclude write-offs in 1989 and 1987 and applicable AFUDC is as follows:

	December 31,		
	1989	1988	1987
Earnings Applicable to Common Stock (000's)	$66,819	$68,766	$63,042
Weighted average number of shares (000's)	31,090	30,513	29,728
Earnings per Common Share	$2.15	$2.25	$2.12

With respect to the recognition of disallowed costs in 1987, the PSC also decided that the tax benefits associated with the disallowance should be calculated on a discounted present value basis, utilizing a 34% tax rate rather than a 46% tax rate proposed at that time by the co-tenants. The Company, in its 1987 write-offs, did not recognize the effect of such discounting in its determination of the Federal income tax benefits applicable to the disallowance since the nominal tax benefits at the 34% rate will be ultimately recovered for the benefit of the shareholder. However, the PSC did discount these tax benefits in determining the regulatory disallowance in its June 1987 and July 1988 decisions. Thus, the initial regulatory disallowance was approximately $19 million greater than the Company recognized for financial reporting purposes. This difference in regulatory treatment, all other things being equal, results in a reported return on equity which is less than the PSC authorized return on equity; this difference, however, will be eliminated over the 10-year tax life of Unit 2.

In an action stemming from a delay in Unit 2's testing and power ascension schedule occasioned by defects in the reactor's main steam isolation valves, the co-tenants in April 1987 commenced a lawsuit against three companies involved in the furnishing of that equipment. On August 1, 1988, the co-tenants commenced a second lawsuit, this one against both the firm furnishing architect engineering and construction-management services and a company which fabricated and erected piping for Unit 2. This second suit seeks damages arising from the breach of certain obligations in the contractual arrangements with the defendants, which actions led to redesign, reconstruction and higher cost for the completed work. The parties are currently engaged in discovery procedures in both lawsuits. The Company cannot predict whether these suits will be successful or the amount of damages, if any, which may be recovered. The co-tenants have settled a dispute with General Electric Company relating to the Nuclear Steam Supply System. The accounting treatment for these lawsuits is included in the oral agreement on outstanding issues discussed above.

The directors of the Company in Fall 1986 received a demand letter, from a lawyer purporting to represent two shareholders of the Company, threatening to bring a shareholders' derivative action on behalf of the Company. The letter demanded that the directors take legal action against officers and directors responsible for what it alleged are losses sustained by the Company because of its investment in, and purported mismanagement of, the Unit 2 project. The Secretary of the Company responded to this letter and to a follow-up one by stating that the Board did not believe that, under then current circumstances, any further investigation into the demands was warranted and requesting a statement of any specific facts believed to require action. Neither the directors nor the

Company officers have received further communications from this party on this matter in over three years, but the same firm represents certain shareholders of Niagara in derivative litigation commenced against that company's then present and former officers and directors in May 1988. That suit sought, in addition to the costs of the litigation itself, damages allegedly sustained by Niagara shareholders both from defendants' mismanagement of construction of Unit 2, and resulting disallowance imposed in settlement with the PSC, and from their concealment and fraud in failing to disclose such mismanagement. The Company is unable to predict whether the threats and demands received by it will lead to litigation similar to that in which Niagara has been involved.

Note 11. Commitments and Other Matters

Capital Expenditures.

The Company's 1990 construction expenditures program involves an estimated expenditure of $151 million, including $17 million of carrying charges. The Company has entered into certain commitments for purchase of materials and equipment in connection with that program.

Nine Mile Point Nuclear Plant.

See Note 10.

PSC Fuels Audit.

During 1989, the PSC's Utility Operational Audit Section audited the Company's fuel procurement practices, reviewing documents, interviewing Company personnel and visiting Company and vendor facilities. A draft report of the Audit Section's findings, which the Company anticipates reviewing and commenting upon, is expected to be issued in the first quarter of 1990. Similar audits at other New York utilities have produced recommendations that the PSC require refunds of a portion of rates charged to customers for fuel costs. The Company believes its fuel procurement practices to be sound, but is not able to predict what the PSC Audit Section may recommend or what action the PSC may take.

Environmental Matters.

Operations of the Company's facilities are subject to various federal, state and local environmental standards.

In 1985, the New York State Department of Environmental Conservation (NYSDEC) identified property in the vicinity of the Lower Falls of the Genesee River in Rochester as an inactive hazardous waste disposal site. The NYSDEC conducted an investigation with which the Company as an owner of a portion of the property cooperated and, in March 1988, released a report entitled "Expanded Phase I Investigation—Genesee River Gorge (Lower Falls)". That report includes an assessment of the adequacy of available data, makes recommendations for additional phased investigations and identifies property owners. The Company is included in the list of property owners and on a subsequently-developed list of potentially responsible parties, which lists may be supplemented. The site has been assigned Classification 2, "significant threat to the public health or environment—action required", in the NYSDEC's registry of inactive waste sites. In May 1989, the Company and the City of Rochester agreed to conduct an additional, limited investigation at the site and to share its costs. The Company anticipates that such investigatory work would take two or more years to complete once regulatory authorities have approved the work plan. Cleanup of certain areas of the site may eventually be ordered by the NYSDEC.

At another location along the River where the Company owns property, a boring taken in Fall 1988 for a sewer system project showed a layer containing a black viscous material. The material does not appear to be linked to the Lower Falls site. The find was reported to the NYSDEC, but the Company is not aware of any investigation being conducted by the agency. The Company undertook an investigation to determine the extent of contamination. The study found that some soil and ground water contamination does exist on site, but there was no evidence that the contamination migrated off-site.

If the NYSDEC requires remediation of these sites by virtue of ownership and/or past site disposal activity, the Company may be fully or partially responsible for the costs of investigation and any site remediation. The Company cannot at this time predict whether the NYSDEC will investigate the material from the boring, what outcome will be reached in the Lower Falls site investigation, and, with respect to either location, what future studies may be performed, what remediation measures may be directed and what share of any such activities the Company may be asked to assume.

(Note 11 continued on page 36)

(continued from page 35)

On the Company's property in the Lower Falls site noted above, the County of Monroe has installed and operates sewer lines. During sewer installation, the County constructed certain retention ponds which were reportedly used to recover from the sewer construction area certain fossil-fuel-based materials ("the materials") found there. In July 1989, the Company received a letter from the County asserting that activities of the Company have left the County unable to effect a regulatorily-approved closure of the retention pond area. The County's letter takes the position that it intends to seek reimbursement for its additional costs in recovering the materials once the NYSDEC identifies the generator thereof and that any further cleanup action which the NYSDEC may require at the retention pond site is the Company's responsibility. The County claims to have expended approximately $1.5 million in disposing of the materials. The Company has had discussions with the County on this matter. If the Company were to be found liable therefor, it could experience costs as yet undetermined.

Nuclear Plant Decommissioning.

Under accounting procedures directed by the PSC, the Company has been collecting in its electric rates amounts for the eventual decommissioning of its Ginna Plant and for its 14% share of the decommissioning of Nine Mile Point Unit 2. The Company has collected approximately $25.7 million through December 31, 1989 based on total estimated decommissioning costs approved by the PSC in the amount of $78.2 million for Ginna and $22.3 million for the Company's 14% share of Nine Mile Point Unit 2 (1989 dollars).

In June 1988, the NRC issued new regulations establishing criteria for various facets of decommissioning including acceptable alternative methods, planning, funding and environmental review. The NRC final rule establishes a minimum external funding level determined by formula. According to the formula, the Company estimates that minimum funding level pursuant to the NRC regulation to be approximately $116.8 million for Ginna and $23.7 million for the Company's 14% share of Nine Mile Point Unit 2 (1989 dollars). The NRC minimum represents only the cost of removing the radioactive plant structures.

In connection with the current rate case before the PSC, outside engineering consultants completed site-specific studies of both plants estimating the cost of decommissioning to be $164.3 million for Ginna and $29.1 million for the Company's 14% share of Nine Mile Point Unit 2 (1989 dollars). The Company has proposed to fund an external decommissioning trust in the amount of the NRC minimum funding requirement. The difference between the amount proposed to be collected (as estimated by the outside consultants) and the NRC minimum will be held in an internal reserve.

The Company will comply with the NRC final rule by June 1990, submitting a funding plan, establishing an external decommissioning trust fund, and funding at least the NRC minimum. The Company cannot predict what actions the PSC may take in this matter.

Nuclear-Related Insurance.

The Price-Anderson Act establishes a federal program, providing indemnification and insurance against public liability, applicable in the event of a nuclear accident at a licensed U.S. reactor. Amendments to the Act in 1988 increased the public liability limit to approximately $7.4 billion, expanded coverage to precautionary evacuations and extended the Act's effectiveness until the year 2002. Under the program, claims would first be met by insurance which licensees are required to carry in the maximum amount currently available ($200 million). If claims exceed that amount, licensees are subject to a retrospective assessment up to $63 million per licensed facility for each nuclear incident, payable at a rate not to exceed $10 million per year. Those assessments are subject to periodic inflation-indexing and to a 5% surcharge if funds prove insufficient to pay claims. The Company's interests in two nuclear units could thus expose it to a potential payment for each accident of $71.8 million (inflation-indexed) through retrospective assessments of $11.4 million per year in the event of a sufficiently serious nuclear accident at its own or another U.S. commercial nuclear reactor.

Effective January 1, 1988, coverage for claims alleging radiation-induced injuries to some workers at nuclear reactor sites was removed from the nuclear liability insurance policies purchased by the Company. Coverage for workers first engaged in nuclear-related employment at a nuclear site prior to January 1, 1988 continues to be provided under the existing nuclear liability insurance policies. Those workers first employed at a nuclear facility after January 1, 1988 are covered under a new, industry-wide insurance program. This new program contains a retrospective premium assessment feature whereby participants in the program could be assessed to pay incurred losses that exceed the program's reserves. Under the plan as currently established, the Company could be assessed a maximum of $3.2 million over the life of the insurance coverage.

The Company is a member of Nuclear Electric Insurance Limited, which provides insurance coverage for the cost of replacement power during certain prolonged accidental outages of nuclear generating units and coverage for property losses in excess of $500 million at nuclear generating units. If an insuring program's losses exceeded its other resources available to pay claims, the Company could be subject to maximum assessments in any one policy year of approximately $2.6 million and $7.5 million in the event of losses under the replacement power and property damage coverages, respectively.

Gas Cost Recovery.

Throughout the late 1970's and early 1980's, many interstate natural gas pipelines signed long-term gas sales contracts with producers under which the pipelines were obligated to take delivery of a specified percentage of maximum contract volumes of natural gas or, if such quantities were not taken, to pay for them ("take-or-pay"). As a result of falling oil prices and a general trend towards energy conservation, many pipelines subsequently experienced a significant reduction in sales, leading to substantial take-or-pay liability to their producers. The FERC, in response to this industry-wide problem, is allowing an interstate pipeline to pass through to its customers, including downstream pipelines and local gas distribution companies, between 25% and 50% of the pipeline's take-or-pay costs.

The PSC instituted hearings on this subject on October 13, 1988. In a ruling issued January 31, 1989, the PSC deferred for later consideration an issue raised by the Company as to whether the agency could deny recovery of pipeline take-or-pay costs billed by an interstate supplier and paid by a distribution company. The PSC scheduled hearings to determine whether distribution companies should be required to absorb some portion of such take-or-pay costs. In December 1988, the Staff of the PSC and the Company entered into an interim agreement which permits the Company to recover from ratepayers 65% of the take-or-pay costs during the continuation of the PSC proceeding, subject to refund pending permanent disposition of such costs. By order dated March 29, 1989, the PSC approved the interim settlement.

On April 7, 1989, the Company and Staff entered into a second Settlement Agreement to determine, on a permanent basis, the recoverability of at least a portion of the Company's take-or-pay costs. The Agreement provides for the recovery from ratepayers of 87.5% of the first $12 million of such costs through the same surcharge mechanism provided in the interim settlement. The recovery of any take-or-pay costs incurred in excess of $12 million would be subject to future negotiations with the PSC Staff. In an order issued October 3, 1989, the PSC approved those provisions in the second Settlement Agreement relating to the absorption by the Company of take-or-pay costs. A PSC order issued December 11, 1989, determined how the allowed costs are to be allocated among ratepayers and recovered in rates.

The Company is presently unable to estimate the amount of take-or-pay costs which may ultimately be included in its pipeline suppliers' charges to it because several pipelines currently have pending before FERC proposals for recovery of such costs, the outcome of which the Company is unable to predict. As of December 31, 1989 the Company had been billed for $2.8 million of take-or-pay costs.

Other Matters.

The Company's contract with the federal Department of Energy (DOE) for nuclear fuel enrichment services assures provision of 70% of the Ginna Nuclear Plant's requirements throughout its service life or 30 years, whichever is less. No payment obligation accrues unless such enrichment services are needed. The Company has secured the remaining 30% of its Ginna requirements under additional arrangements with DOE for the years 1991 through 1995. The remaining 30% of its Ginna requirements for 1990 have been purchased on the spot market. The annual cost of DOE enrichment services utilized for the three most recent years and that estimated for the next seven years (priced at the most current rate) are as follows:

1987	$4,700,000	1990–1995	$5,500,000
1988	5,300,000	1996	4,100,000
1989	4,300,000		

REPORT OF INDEPENDENT ACCOUNTANTS

Price Waterhouse

1900 Lincoln First Tower
Rochester, New York 14604
January 25, 1990

(Except for Note 10, as to which the date is February 20, 1990)

To the Shareholders and Board of Directors of
Rochester Gas and Electric Corporation

In our opinion, the accompanying balance sheets and the related statements of income, retained earnings and cash flows present fairly, in all material respects, the financial position of Rochester Gas and Electric Corporation at December 31, 1989 and 1988, and the results of its operations and its cash flows for each of the three years in the period ended December 31, 1989, in conformity with generally accepted accounting principles. These financial statements are the responsibility of the Company's management; our responsibility is to express an opinion on these financial statements based on our audits. We conducted our audits of these statements in accordance with generally accepted auditing standards which require that we plan and perform the audit to obtain reasonable assurance about whether the financial statements are free of material misstatement. An audit includes examining, on a test basis, evidence supporting the amounts and disclosures in the financial statements, assessing the accounting principles used and significant estimates made by management, and evaluating the overall financial statement presentation. We believe that our audits provide a reasonable basis for the opinion expressed above.

As discussed in Note 10 to the financial statements, the Company adopted in 1987 Statement of Financial Accounting Standards No. 90 "Regulated Enterprises—Accounting for Abandonments and Disallowances of Plant Costs." The adoption of this Statement resulted in the disallowed portion of the Company's investment in the Nine Mile Point Nuclear Plant Unit No. 2 being recognized as a loss in the 1987 financial statements.

Price Waterhouse

Tax Status of Cash Dividends

Cash dividends paid in 1989, 1988 and 1987 were 100 percent taxable for Federal income tax purposes.

Earnings and Dividends	1989	1988	1987
Earnings per weighted average share			
Total	$2.10	$2.25	$(5.95)
Before cumulative effect of accounting change	$2.10	$2.25	$ .54
Number of shares (000's)			
Weighted average	31,090	30,513	29,728
Actual number at December 31	31,258	30,786	30,121
Number of shareholders at December 31	38,762	41,834	44,127
Cash dividends paid			
1st quarter	$.375	$.375	$ .55
2nd quarter	.375	.375	.55
3rd quarter	.375	.375	.55
4th quarter	.375	.375	.375

Common Stock Trading

Shares of the Company's Common Stock are traded on the New York Stock Exchange under the symbol "RGS".

	1989	1988	1987
Common Stock—Price Range			
High			
1st quarter	18¼	17½	25⅞
2nd quarter	20⅞	18¼	19⅞
3rd quarter	21⅜	18¼	18⅜
4th quarter	22⅛	17⅞	17¼
Low			
1st quarter	17	14¾	19⅞
2nd quarter	17	15¾	15⅝
3rd quarter	19⅛	16⅜	16¾
4th quarter	19½	16¾	14¼
At December 31	21½	17¼	14¾

Dividend Policy

The Company has paid cash dividends quarterly on its Common Stock without interruption since it became publicly held in 1949. The Company intends to strive to achieve a common stock dividend payout equal to 8.5 to 9.0 percent of common stock book value. However, the level of future cash dividend payments will be dependent upon the Company's future earnings, its financial requirements and other factors.

Quarterly dividends on Common Stock are generally paid on the twenty-fifth day of January, April, July and October. In January 1990, the Company paid a cash dividend of $.39 per share on its Common Stock, up $.015 from the prior quarterly dividend payment of $.375. The January 1990 dividend payment is equivalent to $1.56 on an annual basis.

Automatic Dividend Reinvestment and Stock Purchase Plan

The Automatic Dividend Reinvestment and Stock Purchase Plan offers the Company's shareholders a convenient way of acquiring additional shares of the Company's Common Stock without paying brokerage commissions or other charges. Shareholders participate in the Plan by authorizing an independent agent to purchase additional shares with their cash dividends. All shares for the Plan are currently purchased on the open market. Most participating shareholders elect to reinvest the dividends on all of their shares, but the Plan does permit partial dividend reinvestment. Shareholders can also participate in the Plan by making optional cash payments, even if they decide not to reinvest their dividends. There are no brokerage fees or other expenses for shares acquired under the Plan because the Company pays these costs for participating shareholders. For more information about the Plan, contact the Agent, Chase Lincoln First Bank, N.A., Corporate Agency Department, Post Office Box 1507, Rochester, New York 14603 (716-232-5000).

Market Value per Share of Common Stock as a Percent of Book Value per Share
(year end)

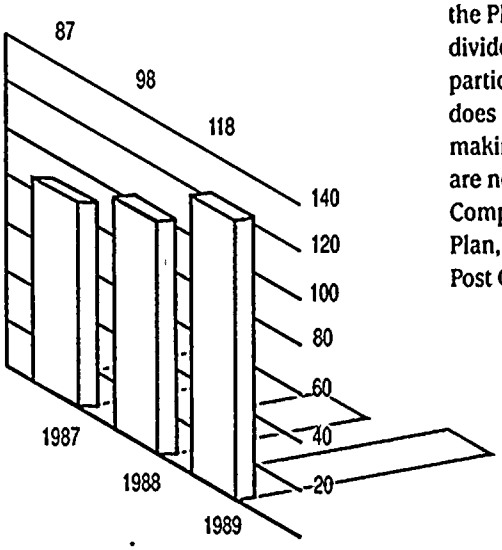

This upward trend reflects a more favorable market environment for the Company's Common Stock.

SELECTED FINANCIAL DATA

(Thousands of Dollars) Year Ended December 31	1989	1988*	1987*	1986*	1985*	1984*
Summary of Operations						
Operating Revenues						
Electric	$543,096	$514,637	$ 489,366	$463,841	$435,846	$404,594
Gas	264,573	231,217	218,408	257,982	270,623	287,054
	807,669	745,854	707,774	721,823	706,469	691,648
Electric sales to other utilities	38,028	29,966	26,215	20,465	44,103	60,103
Total Operating Revenues	845,697	775,820	733,989	742,288	750,572	751,751
Operating Expenses						
Fuel Expenses						
Electric fuels	75,873	65,787	61,443	49,531	71,172	69,844
Purchased electricity	39,645	30,299	26,467	30,144	27,804	35,497
Gas purchased for resale	152,623	129,596	124,086	157,198	175,705	182,879
Total Fuel Expenses	268,141	225,682	211,996	236,873	274,681	288,220
Operating Revenues Less Fuel Expenses	577,556	550,138	521,993	505,415	475,891	463,531
Other Operating Expenses						
Operations excluding fuel expenses	173,764	159,689	159,170	148,340	129,273	131,670
Maintenance	64,316	52,575	46,124	44,767	42,518	41,013
Depreciation and Amortization	75,063	69,703	55,530	52,072	46,716	42,199
Taxes—local, state and other	95,341	88,635	82,869	84,590	81,983	83,013
Federal income tax—current	20,509	20,363	32,781	22,521	12,974	15,724
—deferred	17,330	20,299	23,144	37,304	44,978	41,885
Total Other Operating Expenses	446,323	411,264	399,618	389,594	358,442	355,504
Operating Income	131,233	138,874	122,375	115,821	117,449	108,027
Other Income and Deductions						
Allowance for other funds used during construction	2,261	2,047	5,030	32,828	38,393	33,782
Federal income tax	1,439	1,683	17,520	13,880	13,344	13,356
Disallowed project costs	(2,100)	—	(55,860)	—	—	—
Other, net	8,328	6,901	8,831	6,725	3,899	261
Total Other Income and Deductions	9,928	10,631	(24,479)	53,433	55,636	47,399
Income before Interest Charges	141,161	149,505	97,896	169,254	173,085	155,426
Interest Charges						
Long term debt	68,628	72,270	73,489	74,571	70,373	63,103
Short term debt	—	—	129	68	—	19
Other, net	3,115	2,898	2,685	2,074	2,227	2,464
Allowance for borrowed funds used during construction	(2,026)	(1,777)	(2,696)	(11,978)	(14,339)	(12,741)
Total Interest Charges	69,717	73,391	73,607	64,735	58,261	52,845
Income from Continuing Operations, Before Cumulative Effect of Accounting Change	71,444	76,114	24,289	104,519	114,824	102,581
Discontinued Steam Operations	—	—	—	—	(6,356)	1,037
Cumulative Effect for Years Prior to 1987 of Accounting Change for Disallowed Costs	—	—	(193,000)	—	—	—
Net Income (Loss)	71,444	76,114	(168,711)	104,519	108,468	103,618
Dividends on Preferred and Preference Stock, at required rates	6,025	7,348	8,147	8,058	9,467	12,213
Earnings (Loss) Applicable to Common Stock	$ 65,419	$ 68,766	$(176,858)	$ 96,461	$ 99,001	$ 91,405
Weighted Average Number of Shares Outstanding in Each Period, (000's)	31,090	30,513	29,728	28,927	27,641	25,101
Earnings (Loss) per Common Share—Total	$2.10	$2.25	$(5.95)	$3.33	$3.58	$3.64
Earnings (Loss) per Common Share—Continuing Operations	$2.10	$2.25	$ .54	$3.33	$3.81	$3.60
Cash Dividends Paid per Common Share	$1.50	$1.50	$2.025	$2.20	$2.20	$2.04

*Reclassified for comparative purposes. (See Note 1 of the Notes to the Financial Statements.)

Condensed Balance Sheet

(Thousands of Dollars) At December 31	1989	1988	1987	1986	1985	1984
Assets						
Utility Plant	$2,208,158	$2,122,922	$1,559,848	$1,531,019	$1,446,916	$1,394,375
Less—Accumulated depreciation and amortization	730,621	653,876	586,840	571,022	532,947	489,938
	1,477,537	1,469,046	973,008	959,997	913,969	904,437
Construction work in progress	68,784	41,044	501,738	768,905	710,194	554,331
Net utility plant	1,546,321	1,510,090	1,474,746	1,728,902	1,624,163	1,458,768
Current Assets	188,527	211,313	184,309	141,222	144,217	151,042
Deferred Debits	102,729	102,015	131,526	114,340	82,092	64,269
Total Assets	$1,837,577	$1,823,418	$1,790,581	$1,984,464	$1,850,472	$1,674,079
Capitalization and Liabilities						
Capitalization						
Long term debt	$ 764,627	$ 792,976	$ 845,326	$ 773,082	$ 765,511	$ 678,018
Preferred stock redeemable at option of Company	67,000	67,000	67,000	67,000	67,000	67,000
Preferred stock subject to mandatory redemption	30,000	30,000	50,797	43,485	45,922	47,562
Common shareholders' equity						
Common stock	513,560	504,907	494,018	479,704	461,078	405,200
Retained earnings	57,983	39,710	17,617	249,505	216,795	179,676
Total common shareholders' equity	571,543	544,617	511,635	729,209	677,873	584,876
Total Capitalization	1,433,170	1,434,593	1,474,758	1,612,776	1,556,306	1,377,456
Long Term Liability—Department of Energy	55,502	51,016	47,773	44,950	42,214	39,084
Current Liabilities	137,189	126,233	90,504	118,348	98,270	131,108
Deferred Credits and Other Liabilities	211,716	211,576	177,546	208,390	153,682	126,431
Total Capitalization and Liabilities	$1,837,577	$1,823,418	$1,790,581	$1,984,464	$1,850,472	$1,674,079

Financial Data

At December 31	1989	1988	1987	1986	1985	1984
*Capitalization Ratios** (percent)						
Long term debt	55.1	56.8	58.7	49.3	50.5	50.6
Preferred stock	6.5	6.5	7.7	6.7	7.1	8.1
Common shareholders' equity	38.4	36.7	33.6	44.0	42.4	41.3
Total	100.0	100.0	100.0	100.0	100.0	100.0
Book Value per Common Share—Year End	$18.28	$17.69	$16.98	$24.93	$23.79	$22.78
Rate of Return on Average Common Equity (percent)	11.56**	12.68	12.45**	13.38	14.93	16.01
Embedded Cost of Senior Capital (percent)						
Long term debt	8.74	8.71	8.90	9.36	9.88	9.91
Preferred stock	6.72	6.72	7.09	7.20	7.27	7.37
Effective Federal Income Tax Rate (percent)	33.8	33.9	61.3	30.5	28.0	30.1
Depreciation Rate (percent)—Electric	3.25	3.56	3.50	3.50	3.40	3.30
—Gas	2.96	2.96	2.98	2.99	2.98	3.12
*Interest Coverages****						
Before federal income taxes (incld. AFUDC)	2.53	2.53	2.55	2.96	3.08	3.26
(excld. AFUDC)	2.47	2.48	2.45	2.38	2.35	2.55
After federal income taxes (incld. AFUDC)	2.02	2.01	1.93	2.36	2.49	2.58
(excld. AFUDC)	1.96	1.96	1.83	1.78	1.77	1.87

*Includes Company's long term liability to the Department of Energy.
**Excludes disallowed Nine Mile Two plant costs written off in 1989 and 1987.
***AFUDC included in interest coverages prior to 1987 has not been restated to reflect the disallowance of certain Nine Mile Two plant costs recognized by the Company in 1987.

ELECTRIC DEPARTMENT STATISTICS

Year Ended December 31	1989	1988	1987	1986	1985	1984
Electric Revenue (000's)						
Residential	$191,732	$188,451	$178,933	$166,664	$155,193	$147,500
Commercial	155,076	149,663	146,138	137,077	122,292	118,628
Industrial	124,634	120,490	118,479	116,321	110,135	109,052
Other (Includes Unbilled Revenue)*	71,654	56,033	45,816	43,779	48,226	29,414
Electric revenue from our customers	543,096	514,637	489,366	463,841	435,846	404,594
Other electric utilities	38,028	29,966	26,215	20,465	44,103	60,103
Total electric revenue	581,124	544,603	515,581	484,306	479,949	464,697
Electric Expense (000's)						
Fuel used in electric generation*	75,873	65,787	61,443	49,531	71,172	69,844
Purchased electricity	39,645	30,299	26,467	30,144	27,804	35,497
Other operation	137,458	124,871	126,320	113,497	96,194	97,612
Maintenance	55,915	44,060	37,641	36,573	35,013	33,535
Depreciation and Amortization	65,287	60,444	46,776	43,753	39,015	34,822
Taxes—local, state and other	71,361	66,426	61,504	61,314	58,867	59,215
Electric revenue deductions	445,539	391,887	360,151	334,812	328,065	330,525
Operating Income before Federal Income Tax	135,585	152,716	155,430	149,494	151,884	134,172
Federal income tax	29,887	34,093	48,788	52,051	52,068	47,410
Operating Income from Electric Operations (000's)	$105,698	$118,623	$106,642	$ 97,443	$ 99,816	$ 86,762
Electric Operating Ratio %	53.2	48.7	48.9	47.4	48.0	50.9
Electric Sales—KWH (000's)**						
Residential	2,072,047	2,051,808	1,970,345	1,890,293	1,846,993	1,834,564
Commercial	1,832,521	1,792,162	1,732,939	1,657,606	1,591,670	1,539,662
Industrial	1,906,429	1,869,417	1,782,223	1,775,722	1,814,460	1,783,415
Other	491,904	483,730	463,256	452,756	452,142	452,189
Electric sales to our customers	6,302,901	6,197,117	5,948,763	5,776,377	5,705,265	5,609,830
Other electric utilities	1,255,283	1,149,900	1,047,654	925,318	1,404,504	1,554,392
Total electric sales	7,558,184	7,347,017	6,996,417	6,701,695	7,109,769	7,164,222
Electric Customers at December 31						
Residential	293,418	290,037	285,988	281,630	277,758	273,050
Commercial	28,386	27,888	27,383	26,865	26,184	25,432
Industrial	1,422	1,392	1,381	1,368	1,362	1,459
Other	2,512	2,326	2,281	2,266	2,254	2,249
Total electric customers	325,738	321,643	317,033	312,129	307,558	302,190
Electricity Generated and Purchased—KWH (000's)						
Fossil	2,578,006	2,214,588	1,877,922	1,491,167	2,211,246	2,285,761
Nuclear	3,659,185	3,884,884	3,793,021	3,603,116	3,613,104	3,143,923
Hydro	175,085	169,002	223,958	235,175	153,636	218,228
Pumped storage	290,582	292,305	246,925	237,663	240,375	205,760
Less energy for pumping	(429,895)	(430,401)	(387,546)	(353,735)	(373,537)	(311,710)
Other	54,893	2,195	4,554	1,850	4,354	3,846
Total generated—Net	6,327,856	6,132,573	5,758,834	5,215,236	5,849,178	5,545,808
Purchased	1,757,413	1,705,755	1,703,411	1,945,586	1,713,481	2,037,936
Total electric energy	8,085,269	7,838,328	7,462,245	7,160,822	7,562,659	7,583,744
Electric Department Fuel						
Fossil —Total BTU (million)	27,666,715	23,425,796	20,083,347	15,896,376	23,140,883	23,627,034
—Cents per million BTU	198.90	201.40	209.55	216.69	237.09	232.64
Nuclear—Total BTU (million)	39,660,886	41,662,677	40,538,534	38,660,500	39,034,016	34,225,538
—Cents per million BTU	58.14	49.07	52.30	48.49	46.85	50.67
System Net Capability—KW at December 31						
Fossil	541,000	541,000	541,000	510,000	587,000	587,000
Nuclear	621,000	621,000	470,000	470,000	470,000	470,000
Hydro	47,000	47,000	47,000	47,000	47,000	47,000
Other	29,000	29,000	29,000	29,000	29,000	29,000
Purchased	369,000	360,000	363,000	356,000	352,000	355,000
Total system net capability	1,607,000	1,598,000	1,450,000	1,412,000	1,485,000	1,488,000
Net Peak Load—KW	1,249,000	1,275,000	1,205,000	1,100,000	1,076,000	1,075,000
Annual Load Factor—Net %	62.4	59.7	60.8	64.7	65.4	63.9

*Deferred Fuel Expense was reclassified from Expense to Revenue—Other for comparative purposes.
**KWH Sales exclude energy delivered but not billed to customers for the period.

GAS DEPARTMENT STATISTICS

Year Ended December 31	1989	1988	1987	1986	1985	1984
Gas Revenue (000's)						
Residential	$ 6,770	$ 6,439	$ 6,436	$ 7,694	$ 8,403	$ 8,924
Residential spaceheating	165,832	150,383	138,552	156,120	153,279	162,727
Commercial	46,897	44,781	43,311	52,653	53,568	56,518
Industrial	9,371	9,859	10,842	28,800	38,837	46,518
Municipal and other (Includes Unbilled Revenue)*	35,703	19,755	19,267	12,715	16,536	12,367
Total gas revenue	264,573	231,217	218,408	257,982	270,623	287,054
Gas Expense (000's)						
Gas purchased for resale*	152,623	129,596	124,086	157,198	175,705	182,879
Other operation	36,306	34,818	32,850	34,843	33,079	34,058
Maintenance	8,401	8,515	8,483	8,194	7,505	7,478
Depreciation	9,776	9,259	8,754	8,319	7,701	7,377
Taxes—local, state and other	23,980	22,209	21,365	23,276	23,116	23,798
Gas revenue deductions	231,086	204,397	195,538	231,830	247,106	255,590
Operating Income before Federal Income Tax	33,487	26,820	22,870	26,152	23,517	31,464
Federal income tax	7,952	6,569	7,137	7,774	5,884	10,199
Operating Income from Gas Operations (000's)	$ 25,535	$ 20,251	$ 15,733	$ 18,378	$ 17,633	$ 21,265
Gas Operating Ratio %	74.6	74.8	75.7	77.6	79.9	78.2
Gas Sales—Therms (000's)**						
Residential	10,321	10,374	10,255	11,382	12,296	12,746
Residential spaceheating	277,267	267,697	244,655	253,101	244,593	252,518
Commercial	84,152	86,413	83,167	92,864	93,283	95,427
Industrial	17,873	20,174	22,033	56,621	76,263	90,266
Municipal	12,319	15,514	17,985	23,405	24,848	26,937
Total gas sales to our customers	401,932	400,172	378,095	437,373	451,283	477,894
Transportation of customer-owned gas	105,303	83,594	67,496	24,589	618	—
Total gas sold and transported	507,235	483,766	445,591	461,962	451,901	477,894
Gas Customers at December 31						
Residential	23,321	24,139	24,834	25,865	27,202	28,438
Residential spaceheating	215,120	210,710	206,458	201,227	196,035	191,192
Commercial	17,677	17,213	16,771	16,330	15,816	15,323
Industrial	1,095	1,042	1,035	1,015	1,029	1,019
Municipal	1,067	1,039	1,026	1,009	990	977
Total gas customers	258,280	254,143	250,124	245,446	241,072	236,949
Gas—Therms (000's)						
Purchased for resale	426,941	408,044	381,632	439,381	469,386	475,976
Other	1,764	1,967	2,317	5,996	14,943	18,039
Total gas available	428,705	410,011	383,949	445,377	484,329	494,015
Cost of gas per therm	35.74¢	31.76¢	32.51¢	35.82¢	37.53¢	38.52¢
*Total Daily Capacity—Therms at December 31****	4,485,000	4,485,000	4,485,000	4,485,000	4,485,000	4,485,000
Maximum daily throughput—Therms	3,719,050	3,744,500	3,443,240	3,499,640	3,746,980	3,711,490
Degree Days (Customer Billing)						
For the period	6,824	6,871	6,439	6,742	6,412	6,784
Percent colder (warmer) than normal	2.3	1.2	(4.6)	1.3	(5.0)	1.1

*Deferred Fuel Expense was reclassified from Expense to Revenue—Other for comparative purposes.
**Therm Sales exclude energy delivered but not billed to customers for the period.
***Method for determining daily capacity, based on current network analysis, reflects the maximum demand which the transmission system can accept without a deficiency.

INTERIM FINANCIAL DATA

In the opinion of the Company, the following quarterly information includes all adjustments, consisting of normal recurring adjustments, necessary for a fair statement of the results of operations for such periods. The variations in operations reported on a quarterly basis are a result of the seasonal nature of the Company's business and the availability of the Company's Ginna Nuclear Plant. The cumulative effect of the accounting change related to the Nine Mile Two disallowed project costs and related write-offs during the years 1987 and 1989 are discussed in Note 10 of the Notes to the Financial Statements.

	(Thousands)				
Quarter Ended	Operating Revenues*	Operating Income	Net Income (Loss)	Earnings (Loss) on Common Stock	Earnings (Loss) Per Common Share (in dollars)
December 31, 1989	$233,001	$37,991	$ 21,627	$ 20,121	$ .64
September 30, 1989	183,209	31,698	18,420	16,914	.54
June 30, 1989	184,553	18,579	3,282	1,776	.05
March 31, 1989	244,933	42,965	28,114	26,608	.86
December 31, 1988	$193,465	$26,454	$ 10,577	$ 9,071	$ .29
September 30, 1988	175,111	37,879	21,979	20,079	.65
June 30, 1988	163,016	28,396	12,517	10,546	.34
March 31, 1988	244,227	46,145	31,042	29,071	.96
December 31, 1987	$171,327	$25,256	$ (9,771)	$ (11,742)	$ (.39)
September 30, 1987	166,618	32,272	20,268	18,297	.61
June 30, 1987	159,548	24,271	12,686	10,715	.36 #
March 31, 1987	236,496	40,576	(191,894)	(194,128)	(6.60)#

*Reflects the reclassification of deferred fuel for comparative purposes for the years 1988 and 1987. (See Note 1 of the Notes to the Financial Statements.)

#Restated from published quarterly data. The cumulative effect of the accounting change ($193 million, net of Federal income tax benefits) has been reflected in the first quarter restatement. The first and second quarters reflect the discontinuance of AFUDC on the disallowed project costs. (See Note 10 of the Notes to the Financial Statements.)

Management Appointment

The board of directors appointed Robert E. Smith to the position of senior vice president, production and engineering effective September 1, 1989.

DIRECTORS AND OFFICERS

(As of January 1, 1990)

Board of Directors

Theodore J. Altier
Former Chairman of the Board and
Chief Executive Officer,
Altier & Sons Shoes, Inc.

Keith W. Amish
Former Vice Chairman of the Board,
Rochester Gas and Electric Corporation

William Balderston III
Chairman of the Board,
Chief Executive Officer and President,
Chase Lincoln First Bank, N.A.

Paul W. Briggs
Chairman of the Executive and
Finance Committee,
Rochester Gas and Electric Corporation

E. Kent Damon
Former Vice President and Secretary,
Xerox Corporation

Natacha P. Dykman
Former Chairman of the Board of Trustees,
Center for Governmental
Research, Inc.

Walter A. Fallon
Former Chairman of the Board and
Chief Executive Officer,
Eastman Kodak Company

Roger W. Kober
President and Chief
Operating Officer,
Rochester Gas and Electric Corporation

Theodore L. Levinson
Former President and
Chief Executive Officer,
Star Supermarkets, Inc.

Constance M. Mitchell
Former Program Director,
Industrial Management Council of
Rochester, New York, Inc.

Cornelius J. Murphy
Senior Vice President,
Goodrich & Sherwood Company

Arthur M. Richardson
President,
Richardson Capital Corporation

M. Richard Rose
President,
Rochester Institute of Technology

Harry G. Saddock
Chairman of the Board and
Chief Executive Officer,
Rochester Gas and Electric Corporation

William G. vonBerg
Executive Director,
Executive Service Corps of
Rochester, Inc.

Committees of the Board of Directors

Executive and Finance
Keith W. Amish
William Balderston III
Paul W. Briggs*
E. Kent Damon
Walter A. Fallon
Roger W. Kober
Arthur M. Richardson
Harry G. Saddock
William G. vonBerg

Audit
Paul W. Briggs
Natacha P. Dykman
Theodore L. Levinson
Constance M. Mitchell
Cornelius J. Murphy
M. Richard Rose
William G. vonBerg*

Compensation
William Balderston III
Paul W. Briggs*
E. Kent Damon
Walter A. Fallon
Cornelius J. Murphy
William G. vonBerg

Nominating
Theodore J. Altier
E. Kent Damon*
Natacha P. Dykman
Constance M. Mitchell
Arthur M. Richardson
Harry G. Saddock

*Chairman

Officers

Harry G. Saddock
Chairman of the Board and
Chief Executive Officer
Age 60, Years of Service, 39

Roger W. Kober
President and Chief Operating Officer
Age 56, Years of Service, 24

Robert C. Henderson
Senior Vice President,
Controller and Chief Financial Officer
Age 49, Years of Service, 26

David K. Laniak
Senior Vice President, Gas, Electric
Distribution and Corporate Planning
Age 54, Years of Service, 35

John W. Oberlies
Senior Vice President,
Customer and Administrative Services
Age 50, Years of Service, 28

Robert E. Smith
Senior Vice President,
Production and Engineering
Age 52, Years of Service, 30

John E. Arthur
Vice President,
Technical Projects
Age 60, Years of Service, 34

David C. Heiligman
Vice President,
Secretary and Treasurer
Age 49, Years of Service, 26

Howard E. Rowley
Vice President,
Gas and Transportation
Age 62, Years of Service, 41

Richard J. Rudman
Vice President,
Electric Transmission and Distribution
Age 62, Years of Service, 44

Wilfred J. Schrouder, Jr.
Vice President,
Employee Relations and Public Affairs
Age 48, Years of Service, 27

Daniel J. Baier
Assistant Controller
Age 43, Years of Service, 6

John M. Kuebel
Auditor
Age 54, Years of Service, 25

Alan A. Lohrmann
Assistant Treasurer
Age 50, Years of Service, 28

50-220 9004300319

-NOTICE-

THE ATTACHED FILES ARE OFFICIAL RECORDS OF THE RECORDS & REPORTS MANAGEMENT BRANCH. THEY HAVE BEEN CHARGED TO YOU FOR A LIMITED TIME PERIOD AND MUST BE RETURNED TO THE RECORDS & ARCHIVES SERVICES SECTION P1-122 WHITE FLINT. PLEASE DO NOT SEND DOCUMENTS CHARGED OUT THROUGH THE MAIL. REMOVAL OF ANY PAGE(S) FROM DOCUMENT FOR REPRODUCTION MUST BE REFERRED TO FILE PERSONNEL.

Rec'd w/ ltr 4/24/90

-NOTICE-

Rochester Gas and Electric Corporation
89 East Avenue, Rochester, N.Y. 14649
(716) 546-2700
An Equal Opportunity Employer