ENCLOSURE 1

GENERIC FUNDAMENTALS EXAMINATION SECTION (GFES)

BOILING WATER REACTOR

FORM A

ENCLOSURE 1

FEBRUARY 1990 BWR GFE - FORM A ANSWER KEY

1.	DELETED	26.	A	51.	D	76.	A
2.	A	27.	A	52.	A	77.	C
3.	C	28.	C	53.	D	78.	B
4.	A	29.	B	54.	C	79.	C
5.	B	30.	A	55.	DELETED	80.	B
6.	D	31.	D	56.	C	81.	B
7.	C	32.	B	57.	A	82.	A
8.	A	33.	D	58.	D	83.	B
9.	D	34.	C	59.	C	84.	B
10.	C	35.	A	60.	B	85.	D
11.	A	36.	B	61.	D	86.	C
12.	D	37.	C	62.	B	87.	A
13.	A	38.	D	63.	C	88.	C
14.	B	39.	A	64.	A	89.	D
15.	C	40.	A	65.	A	90.	C
16.	B	41.	B	66.	D	91.	B
17.	C	42.	A	67.	A	92.	C
18.	A	43.	D	68.	C	93.	B
19.	A	44.	C	69.	B	94.	C
20.	D	45.	C	70.	A	95.	A
21.	C	46.	A	71.	C	96.	A
22.	B	47.	A	72.	B	97.	A
23.	D	48.	A	73.	A	98.	B
24.	D	49.	B	74.	DELETED	99.	D
25.	D	50.	B	75.	A	100.	C

RULES AND GUIDELINES FOR THE GENERIC FUNDAMENTALS EXAMINATION

During the administration of this examination the following rules apply:

(1) Print your name in the blank provided on the cover sheet of the examination.

(2) Fill in the name of your facility.

(3) Fill in the ID-Number you were given at registration.

(4) Fill in your start and stop times at the appropriate time.

(5) Three handouts are provided for your use during the examination, an Equations and Conversions sheet, instructions for filling out the answer sheet, and Steam Table booklets.

(6) Use only the answer sheet provided. Credit will only be given for answers properly marked on this sheet. Follow the instructions for filling out the answer sheet.

(7) Scrap paper will be provided for calculations.

(8) Any questions about an item on the examination should be directed to the examiner only.

(9) Cheating on the examination will result in the automatic forfeiture of this examination. Cheating could also result in severe penalties.

(10) Restroom trips are limited. Only ONE examinee may leave the room at a time. In order to avoid the appearance or possibility of cheating, avoid all contact with anyone outside of the examination room.

(11) After you have completed the examination, sign the statement on the cover sheet indicating that the work is your own and you have not received or been given any assistance in completing the examination.

(12) Turn in your examination materials, answer sheet on top, followed by the exam booklet, then examination aids - steam table booklets, handouts and scrap paper used during the examination.

(13) After turning in your examination materials, leave the examination area, as defined by the examiner. If after leaving you are found in the examination area while the examination is in progress, your examination may be forfeited.

EQUATION SHEET

$\dot{Q} = \dot{m}\, c_p\, \Delta T$

$\dot{Q} = \dot{m}\, \Delta h$

$\dot{Q} = UA\, \Delta T$

$SUR = 26.06/\tau$

$SUR = \dfrac{26.06\ (\lambda_{eff}\ \rho)}{(\beta - \rho)}$

$P = P_0\ 10^{SUR(t)}$

$P = P_0\ e^{(t/\tau)}$

$\tau = (\ell^*/\rho) + [(\bar{\beta} - \rho)/\lambda_{eff}\rho]$

$\rho = (K_{eff} - 1)/K_{eff}$

$\rho = \Delta K_{eff}/K_{eff}$

Cycle Efficiency $= \dfrac{\text{Net Work (out)}}{\text{Energy (in)}}$

$SCR = S/(1 - K_{eff})$

$CR_1\ (1 - K_{eff})_1 = CR_2\ (1 - K_{eff})_2$

$M = 1/(1 - K_{eff}) = CR_1/CR_0$

$M = \dfrac{(1 - K_{eff})_0}{(1 - K_{eff})_1}$

$SDM = (1 - K_{eff})/K_{eff}$

$Pwr = W_t\ \dot{m}$

$\tau = \ell^*/(\rho - \bar{\beta})$

$\ell^* = 1 \times 10^{-5}$ seconds

$\lambda_{eff} = 0.1$ seconds^{-1}

---

1 Curie $= 3.7 \times 10^{10}$ dps

1 hp $= 2.54 \times 10^3$ BTU/hr

1 BTU $= 778$ ft-lbf

°C $= 5/9$ (°F - 32)

1 kg $= 2.21$ lbm

1 Mw $= 3.41 \times 10^6$ BTU/hr

°F $= 9/5$ °C + 32

QUESTION: 1

Which of the following statements describes the operation of reactor pressure vessel safety valves?

A. When the activating pressure for a safety valve returns to the lift setpoint, a combination of air and steam pressure closes the valve.

B. As reactor pressure increases to the lift setpoint, the pressure overcomes spring tension on the valve operator, causing the valve to fully open.

C. As the disk on a safety valve lifts, less pressure is exerted on the disk, reducing the upward force on the disk, and thereby regulating the valve position.

D. When the safety valve lift setpoint is reached, a pilot valve opens allowing reactor pressure to fully open the main valve disk.

QUESTION: 2

If a pressure control valve at the outlet of a heat exchanger is opened, system flow rate will _____ and head loss will _____.

A. increase; decrease

B. increase; increase

C. decrease; decrease

D. decrease; increase

QUESTION: 3

All of the following are acceptable methods for verifying the position of a <u>SHUT</u> manual gate valve, <u>EXCEPT</u>:

A. observing the position of the valve stem using handwheel or position indicators.

B. observing indicators for plant parameters, such as temperature, pressure and level.

C. attempting to turn the handwheel in the "open" direction.

D. attempting to turn the handwheel in the "closed" direction.

QUESTION: 4

The manual declutch lever of a motor-operated valve _____ the motor and _____ the handwheel.

A. disengages; engages

B. deenergizes; engages

C. engages; disengages

D. reenergizes; disengages

QUESTION: 5

Check valves are used to:

A. relieve system overpressure, thereby ensuring system integrity.

B. prevent backflow through non-operating components or flowpaths.

C. maintain a constant backpressure to control flow rate.

D. prevent pump cavitation by keeping systems full of liquid.

QUESTION: 6

Operators should use <u>BOTH</u> hands on valve handwheels when positioning manual valves to:

A. overcome the resistance of installed locking devices.

B. control the rate of valve motion to prevent water hammer.

C. ensure system pressure, temperature, and flow are controlled during valve motion.

D. control lateral force to prevent bending the valve stem.

QUESTION: 7

Which one of the following failures of a wet reference leg differential pressure (D/P) level transmitter will cause its level indicator to indicate the LOWEST level?

A. The D/P cell diaphragm ruptures.

B. The reference leg ruptures.

C. The variable leg ruptures.

D. The equalizing line ruptures.

QUESTION: 8

If a resistance temperature detector (RTD) develops an OPEN circuit (bridge circuit remains intact), indication will fail:

A. high.

B. low.

C. as is.

D. to mid-scale.

QUESTION: 9

A differential pressure level transmitter with its reference leg vented to atmosphere is being used in a control loop to maintain liquid level in a vented tank at 50 percent. The transmitter was calibrated at a tank temperature of 200 degrees F. If the tank temperature gradually falls to 100 degrees F, the control loop will cause ACTUAL level to:

A. be maintained at 50 percent.

B. increase and remain above 50 percent.

C. first increase, then decrease to 50 percent.

D. decrease and remain below 50 percent.

QUESTION: 10

A simple bellows pressure detector is located in the reactor containment with its low pressure side vented to the containment. If a main steam break raises containment pressure by 40 psig, the associated pressure indication (disregarding any temperature effect on the bellows) will:

A. increase by the square root of 40 psig.

B. increase by 40 psig.

C. decrease by 40 psig.

D. stay constant.

QUESTION: 11

A differential pressure (D/P) cell is being used to measure flow rate in a cooling water system. Flow rate is indicating 75 percent of scale. If the D/P cell diaphram ruptures, INDICATED flow rate will:

A. go to 0 percent.

B. go to 100 percent (full-scale).

C. remain the same.

D. move slowly to 50 percent (mid-scale).

QUESTION: 12

A bourdon-tube pressure detector that is indicating 50 percent of scale is suddenly exposed to a pressure transient that extends the detector 75 percent beyond its upper-range value. Actual pressure returns to its original value. Assuming the detector remains intact, the affected pressure indication will initially go off-scale high, and then:

A. become unpredictable until the instrument is calibrated.

B. return to a pressure less than original pressure.

C. return to original pressure.

D. return to a pressure greater than original pressure.

QUESTION: 13

Most of the electrons collected in a fission chamber are released as a result of ionizations caused DIRECTLY by:

A. fission fragments.

B. fission gammas.

C. fission betas.

D. fissionable materials.

QUESTION: 14

Which of the following statements describes the use of a self-reading pocket dosimeter (SRPD)?

A. SRPDs hold their charge indefinitely when removed from a radiation field.

B. SRPD readings must be considered inaccurate when they are dropped.

C. SRPDs can be used to record beta and gamma radiation.

D. The output of an SRPD is a dose rate in mr/hr.

QUESTION: 15

The range of values around the setpoint of a measured variable where NO ACTION occurs in an automatic flow controller is called:

A. deviation.

B. error.

C. deadband.

D. bias.

QUESTION: 16

The governor of an emergency diesel generator (D/G) DIRECTLY senses D/G _____ and adjusts D/G _____ flow to maintain a relatively constant D/G frequency.

A. load, air

B. speed, fuel

C. load, fuel

D. speed, air

QUESTION: 17

The output pressure of a pneumatic controller is typically insufficient to drive a valve actuator accurately. To overcome this problem, a control loop would NORMALLY employ a:

A. valve actuating lead/lag unit.

B. pressure regulator.

C. valve positioner.

D. filter drive unit.

QUESTION: 18

Which of the following changes in pump operating parameters will DIRECTLY lead to pump cavitation in a centrifugal pump that is operating in a closed-loop system?

A. Steadily increasing pump inlet temperature.

B. Steadily decreasing pump flow rate (by reducing pump speed).

C. Steadily increasing pump suction pressure.

D. Steadily increasing pump discharge pressure.

QUESTION: 19

Gas binding in a centrifugal pump can be prevented by _____ prior to pump start.

A. venting the pump

B. lowering suction pressure

C. throttling the discharge valve

D. shutting the discharge valve

QUESTION: 20

The correct way to start most LARGER motor-driven centrifugal pumps is with the pump discharge valve:

A. in any position.

B. throttled to midposition.

C. fully open.

D. fully closed.

QUESTION: 21

A multispeed centrifugal pump is operating at 1800 rpm, providing a flow of 400 gpm at 20 psig. If the pump speed is increased to 3600 rpm, the new pump discharge pressure will be:

A. 20 psig

B. 40 psig

C. 80 psig

D. 160 psig

QUESTION: 22

Which one of the following conditions will result in a DECREASE in the available recirculating pump net positive suction head (NPSH)?

A. Carry-under decreases.

B. Recirculation flow rate increases.

C. Feedwater inlet subcooling increases.

D. Feedwater flow rate increases.

QUESTION: 23

A constant-speed centrifugal pump motor draws the LEAST current when the pump is:

A. at runout conditions.

B. at operating conditions.

C. accelerating to normal speed during start.

D. at shutoff head.

QUESTION: 24

Failure to provide adequate minimum flow for a centrifugal pump can DIRECTLY result in:

A. discharge piping overpressurization.

B. suction piping overpressurization.

C. excessive pump leakoff.

D. pump overheating.

QUESTION: 25

A centrifugal pump is operating at rated conditions in a closed system with all valves fully open. If the pump suction valve is THROTTLED to 50 percent, pump discharge pressure will _____ and flow will _____.

A. increase; decrease

B. decrease; increase

C. increase; increase

D. decrease; decrease

QUESTION: 26

The main generator is connected to the grid. Which of the following characteristics will an UNDEREXCITED generator exhibit?

A. Negative megavars (vars in) and a leading power factor

B. Positive megavars (vars out) and a leading power factor

C. Positive megavars (vars out) and a lagging power factor

D. Negative megavars (vars in) and a lagging power factor

QUESTION: 27

A centrifugal pump has a flow rate of 3,000 gpm and a current requirement of 200 amps. If the speed is reduced such that the flow rate is 2,000 gpm, what is the final CURRENT requirement at the new lower speed? (Assume a constant motor voltage.)

A. 59 amps

B. 89 amps

C. 133 amps

D. 150 amps

QUESTION: 28

Which of the following is the reason for LIMITING the number of motor starts in a given time period?

A. Minimizes pitting of starter contacts

B. Prevents excessive torsional stresses on motor shaft

C. Prevents overheating of motor windings

D. Minimizes axial stresses on motor bearings

QUESTION: 29

If a locked rotor occurs on an operating motor-driven pump, motor amps will:

A. increase due to the decreased pump flow.

B. increase due to the increased mechanical load.

C. decrease due to the decreased pump flow.

D. decrease due to the increased mechanical load.

QUESTION: 30

When placing a heat exchanger in service, care must be taken to introduce both fluids gradually and simultaneously to:

A. prevent excessive thermal stresses in the heat exchanger.

B. maximize heat exchanger efficiency.

C. minimize fouling of the heat exchanger tubes.

D. provide maximum control of cooling water outlet temperature.

QUESTION: 31

Refer to the figure below for the following question. All valves are identical and are initially 50 percent open.

To LOWER the temperature at point 7, the operator should adjust valve _____ in the OPEN direction.

A. A

B. B

C. C

D. D

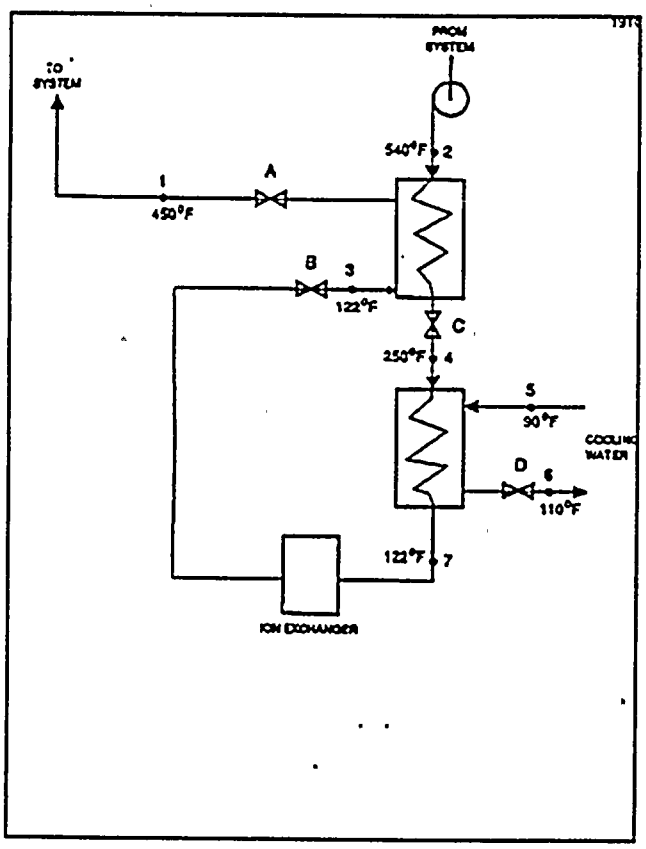

QUESTION: 32

The MAJOR thermodynamic concern resulting from RAPIDLY cooling a pressure vessel is:

A. loss of subcooling margin.

B. thermal shock.

C. loss of shutdown margin.

D. condensation.

QUESTION: 33.

During normal reactor operation, a main condenser develops an air leak which decreases vacuum at a rate of 1 in. Hg/min. Which of the following plant parameters would be the FIRST to show an INCREASE because of this condition?

A. Extraction steam flow

B. Generator megawatt output

C. Circulating water outlet temperature

D. Condensate temperature

QUESTION: 34

Refer to the figure below for the following question.

Which of the following effects would occur as a result of a tube FAILURE in the heat exchanger?

A. High pressure fluid inventory increases.

B. Flow in the low pressure system reverses.

C. Temperature in the low pressure system increases.

D. Level in the tank increases.

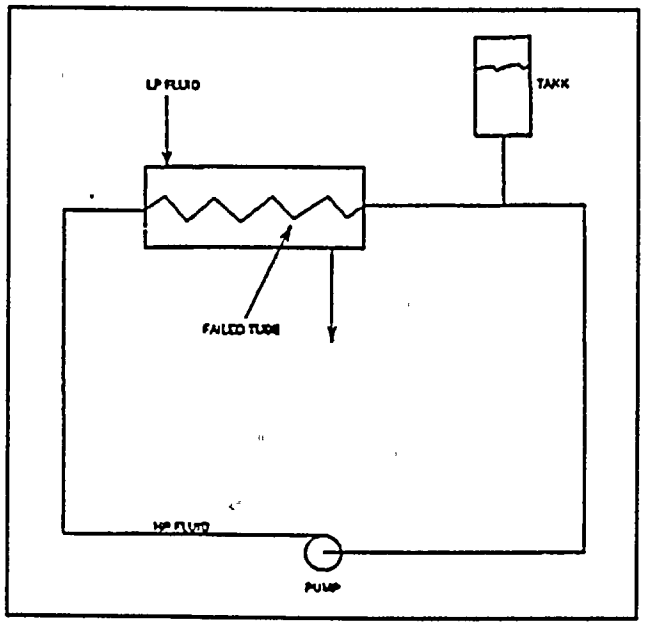

QUESTION: 35.

Proper venting of a shell-and-tube heat exchanger is important because an air bubble:

A. reduces the heat transfer ability of the heat exchanger.

B. causes pressure transients within the tubes as heat load changes.

C. causes thermal shock as it moves through the heat exchanger.

D. causes flow restriction within the heat exchanger.

QUESTION: 36

Channeling in a demineralizer is undesirable because:

A. resin beads will slump to the bottom of the demineralizer causing a flow blockage.

B. portions of the resin will be completely bypassed causing outlet conductivity to increase.

C. the resulting high velocity fluid flow causes erosion of the resin beads and the release of ions.

D. the resulting high velocity fluid flow can cause mechanical damage to system piping and components.

QUESTION: 37

The buildup of scale on heat-transfer surfaces in the reactor vessel:

A. results in lower fuel temperature, which decreases the nuclear fuel cycle efficiency.

B. is controlled by complying with core thermal limits and adhering to fuel preconditioning requirements.

C. is controlled by using reactor water cleanup unit (RWCU) system and condensate system demineralizers.

D. results in higher coolant temperature, which increases overall plant efficiency.

QUESTION: 38

The temperature of the water passing through a demineralizer must be controlled because EXCESSIVELY HOT water:

A. retains impurities, thereby reducing ion exchange.

B. is less dense, allowing less water to flow through the resin bed.

C. will result in demineralizer retention element thermal expansion, thereby releasing resin.

D. will result in demineralizer resin decomposition, thereby reducing resin effectiveness.

QUESTION: 39

A result of proper demineralizer operation on water with impurities is that the exiting water will ALWAYS have:

A. lower conductivity.

B. higher conductivity.

C. lower pH.

D. higher pH.

QUESTION: 40

During maintenance activities, breakers in the open position are TAGGED and RACKED OUT to:

A. deenergize components and associated control and indication circuits.

B. provide administrative control where safety is not of prime importance.

C. maintain remote indication of breaker position (where available) to ensure personnel safety.

D. permit immediate availability of the breaker if required for emergency use.

QUESTION: 41

Which of the following local breaker indications would provide the MOST ACCURATE information for determining the position of a 4160 volt feeder breaker?

A. Overcurrent trip flags and load-side voltage

B. OPEN/CLOSED mechanical flag indication and load-side voltage

C. OPEN/CLOSED indicating lights and load-side current

D. Overcurrent trip flags and load-side current

QUESTION: 42

The function of high voltage electrical disconnects is to:

A. isolate equipment electrically during no-load conditions.

B. isolate equipment electrically during overload conditions.

C. protect circuits during overcurrent conditions.

D. protect circuits during undervoltage conditions.

QUESTION: 43

Which of the following generator conditions is MOST LIKELY to cause generator damage because of high current?

A. Tripping the output breaker under full-load conditions

B. Tripping the generator prime mover under full-load conditions

C. Closing the output breaker on a bus that has an open-circuit fault

D. Closing the output breaker on a bus that has a short-circuit fault

QUESTION: 44

If a breaker is racked in/out to the "test" position, the:

A. normal breaker opening and closing operations cannot be tested because the test position is for overload testing only.

B. breaker can only be operated manually at the switchgear.

C. remote position indication for the breaker is still operational.

D. electrical jumpers must be connected to the operating coils to operate the breaker.

QUESTION: 45

Delayed neutrons are neutrons that:

A. have reached thermal equilibrium with the surrounding medium.

B. are born within 10-14 seconds of the fission event.

C. are born at the lowest average kinetic energy of all fission neutrons.

D. are responsible for the majority of U-235 fissions.

QUESTION: 46

The interaction in the reactor core that is MOST efficient in thermalizing neutrons for fission occurs with the:

A. hydrogen atoms in the water molecules.

B. oxygen atoms in the water molecules.

C. boron atoms in the control rods.

D. zirconium atoms in the fuel cladding.

QUESTION: 47

Which of the following conditions describes a reactor that is EXACTLY critical?

A. Keff = 1; delta-K/K = 0

B. Keff = 1; delta-K/K = 1

C Keff = 0; delta-K/K = 0

D. Keff = 0; delta-K/K = 1

QUESTION: 48

When determining shutdown margin for an operating reactor, how many control rod assemblies are assumed to remain FULLY withdrawn?

A. A single control rod of the highest reactivity worth

B. A symmetrical pair of control rods of the highest reactivity worth

C. A single control rod of average reactivity worth

D. A symmetrical pair of control rods of average reactivity worth

QUESTION: 49

During a reactor startup, the intermediate range monitor (IRM) readings go from 30 percent to 65 percent on the same range in 2 minutes with no operator action. Which of the following is the average REACTOR PERIOD during the power increase?

A. 120 seconds

B. 155 seconds

C. 173 seconds

D. 357 seconds

QUESTION: 50

Without delayed neutrons in the neutron cycle, when positive reactivity is added to a critical reactor, the reactor will:

A. not be able to attain criticality.

B. begin an uncontrollable rapid power increase.

C. experience a rapid but controllable power increase.

D. experience a prompt jump in power level followed by a decrease to the initial power level.

QUESTION: 51

As the core ages, the amount of positive reactivity required to make the reactor prompt critical will _____ because the effective delayed neutron fraction _____.

A. increase; increases

B. increase; decreases

C. decrease; increases

D. decrease; decreases

QUESTION: 52

The moderator temperature coefficient describes a change in _____ resulting from a change in _____.

A. reactivity; moderator temperature

B. Keff; moderator temperature

C. moderator temperature; reactivity

D. moderator temperature; Keff

QUESTION: 53

During a hot reactor startup with the reactor coolant at 520 degrees F, excessive rod withdrawal results in a 10 second reactor period. Without any further operator action, the _____ coefficient will respond FIRST to reduce the rate of the power increase.

A. pressure

B. void

C. moderator

D. doppler

QUESTION: 54

The reactor is operating at steady-state 50 percent power. A control rod is inserted a short distance (from 08 to 02 notches). Assuming that recirculation flow remains constant, reactor power will:

A. increase and stabilize at a higher value.

B. increase temporarily, then return to the original value.

C. decrease and stabilize at a lower value.

D. decrease temporarily, then return to the original value.

QUESTION: 55

Neutron flux shaping within a reactor core is designed to:

A. minimize the effects of rod shadowing.

B. ensure that more power is generated in the lower portion of the core.

C. ensure that local core power limits are not exceeded.

D. minimize the effects of an ejected rod.

QUESTION: 56

The TWO characteristics of Xe-135 that result in it being a MAJOR reactor poison is its relatively _____ half-life and relatively _____ absorption cross section.

A. short; large

B. short; small

C. long; large

D. long; small

QUESTION: 57

The MAJOR contributor to the production of Xe-135 in a reactor operating at full power is:

A. the radioactive decay of iodine.

B. the radioactive decay of promethium.

C. direct production from fission of U-235.

D. direct production from fission of U-238.

QUESTION: 58

The two methods of Xe-135 REMOVAL from a reactor operating at full power are:

A. neutron scatter and beta decay.

B. alpha decay and neutron absorption.

C. fission and alpha decay.

D. beta decay and neutron absorption.

QUESTION: 59

Following a 2 week shutdown, a reactor is taken critical and ramped to full power in 6 hours. How long will it take to achieve an equilibrium xenon condition after the reactor reaches full power?

A. 1 to 2 hours

B. 8 to 10 hours

C. 40 to 50 hours

D. 100 to 120 hours

QUESTION: 60

A reactor has been operating at 25 percent power for 5 days when a scram occurs. Xe-135 will PEAK in approximately:

A. 2 hours.

B. 5 hours.

C. 10 hours.

D. 20 hours.

QUESTION: 61

A reactor has been operating at full power for several weeks when a scram occurs. When the reactor is brought critical 5 hours later, Xe-135 concentration will be HIGHEST in the _____ of the core, which causes thermal flux to be HIGHEST in the _____ of the core.

A. periphery; center

B. periphery; periphery

C. center; center

D. center; periphery

QUESTION: 62

The reactor is being started up and taken to rated power following an extended outage. (Assume a constant ramp rate.) To compensate for the effect of Xenon-135 while INCREASING reactor power, it will be necessary to _____ rods and _____ recirculation flow.

A. withdraw; decrease

B. withdraw; increase

C. insert; increase

D. insert; decrease

QUESTION: 63

A reactor has been operating at full power for 10 weeks when a scram occurs. Twenty-four hours later, the reactor is brought critical and power level is maintained on range 5 of the intermediate range monitors. To maintain a CONSTANT power level for the next several hours, control rods must be:

A. inserted, because the critical reactor will cause a high rate of xenon burnout.

B. maintained at the present height as xenon establishes its equilibrium value for this power level.

C. inserted, because xenon will approximately follow its normal decay curve.

D. withdrawn, because xenon concentration is increasing toward equilibrium.

QUESTION: 64

Burnable poisons are loaded into the core to:

A. allow the initial core to have excess reactivity to extend core life.

B. allow shallow rods to compensate for core burnout.

C. reduce the amount of time required for xenon to peak following a scram.

D. provide for flux shaping in areas of deep rods.

QUESTION: 65

A reactor is operating at 100 percent power and flow. Reactor power is reduced by driving control rods in. (Recirculating pump speed remains constant.) What is the effect on core flow?

A. Core flow will increase, due to the decrease in two-phase flow resistance.

B. Core flow will remain constant, because reactor power does not affect core flow.

C. Core flow will decrease, due to an increase in two-phase flow resistance.

D. Core flow will decrease, due to the decrease in recirculation ratio.

QUESTION: 66

While withdrawing control rods during a reactor startup, the count rate doubles. If the SAME amount of reactivity that caused the first doubling is added again, the count rate will _____ and stabilize at a higher level and the reactor will be _____.

A. double; subcritical

B. double; critical

C. more than double; subcritical

D. more than double; critical

QUESTION: 67

A reactor startup is in progress with Keff at 0.995 and stable source range indication. If Keff is increased to 0.997 by control rod withdrawal, reactor period will initially become _____ and then _____.

A. shorter; approach infinity

B. shorter; continue to gradually shorten

C. longer; approach infinity

D. longer; continue to gradually lengthen

QUESTION: 68

With Keff = 0.985, how much reactivity must be added to make the reactor critical?

A. 1.32% delta-k/k

B. 1.42% delta-k/k

C. 1.52% delta-k/k

D. 1.62% delta-k/k

QUESTION: 69

During a reactor startup, a stable positive 30 second reactor period is achieved with no further reactivity addition. The reactor is:

A. exactly critical.

B. supercritical.

C. subcritical.

D. prompt critical.

QUESTION: 70

Following a normal reactor shutdown, steam production may continue for some period of time, with the RATE of steam production dependent upon:

A. the previous power history of the plant and the time elapsed since shutdown.

B. the amount of time required for the reactor power level to drop below the point of adding heat.

C. the reactor power level at the time of shutdown and initial reactor pressure vessel water level.

D. the recirculation flow rate and the pressure being maintained in the RCS.

QUESTION: 71

Upon reaching criticality during a reactor startup, the operator establishes a positive reactor period. Upon reaching the point of adding heat, the period will become _____ due to the _____ reactivity feedback of moderator and fuel temperature.

A. shorter; negative

B. shorter; positive

C. longer; negative

D. longer; positive

QUESTION: 72

During a normal power increase from 20 percent to 100 percent, the <u>SMALLEST</u> negative reactivity addition is caused by the change in:

A. fuel temperature.

B. moderator temperature.

C. xenon concentration.

D. void content.

QUESTION: 73.

Refer to the figure below for the following question.

A differential pressure manometer filled with water is installed across an orifice in a ventilation duct to determine the direction of airflow. With the ventilation conditions as shown, the pressure at P1 is _____ than P2, and airflow is _____.

A. greater; left to right

B. greater; right to left

C. less; left to right

D. less; right to left

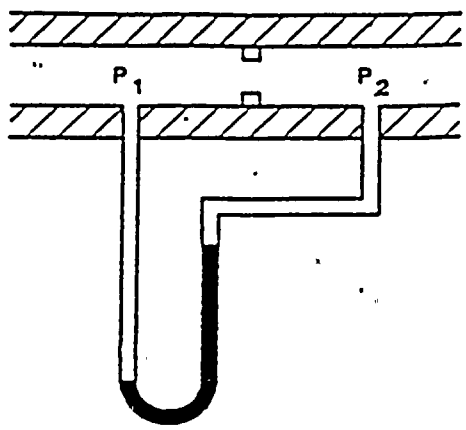

QUESTION: 74

Which one of the following has the LOWEST quality?

A. Superheated steam

B. Subcooled liquid

C. Saturated steam

D. Saturated liquid

QUESTION: 75

The saturation pressure for water at 328 degrees F is:

A. 85 psig.

B. 100 psig.

C. 115 psig.

D. 130 psig.

QUESTION: 76

During jet pump operation, a high pressure, low velocity fluid flow is supplied through a _____ where the pressure drops and the velocity increases, creating a low pressure area in the _____ section.

A. nozzle; throat

B. nozzle; diffuser

C. diffuser; throat

D. diffuser; nozzle

QUESTION: 77

Condenser pressure is 1.0 psia. During the cooling process in the condenser, the LP turbine exhaust reaches a temperature of 101 degrees F, at which time it is a:

A. saturated liquid.

B. saturated vapor.

C. subcooled liquid.

D. superheated vapor.

QUESTION: 78

Which of the following is the MOST PROBABLE steam plant location for superheated steam?

A: The outlet of the high pressure turbine

B. The outlet of the moisture separators/reheaters

C. The inlet of the high pressure turbine

D. The outlet of the low pressure turbine

QUESTION: 79

A sudden stop of fluid flow in a piping system, due to rapid closure of an isolation valve, will MOST LIKELY result in:

A. check valve slamming.

B. pump runout.

C. water hammer.

D. pressurized thermal shock.

QUESTION: 80

Cavitation is the formation of vapor bubbles in the _____ pressure area of a pump followed by the _____ of these bubbles within the pump casing.

A. low; expansion

B. low; collapse

C. high; expansion

D. high; collapse

QUESTION: 81

The available net positive suction head (NPSH) of a centrifugal pump:

A. decreases with increased subcooling to the pump.

B. decreases with an increase in pump flow rate.

C. increases as the suction temperature increases.

D. decreases as pump discharge pressure increases.

QUESTION: 82

A centrifugal pump is being returned to service after maintenance. The operator FAILS to vent the pump properly. When the pump is started the operator should see _____ capacity and _____ discharge head.

A. lower; lower

B. lower; higher

C. higher; lower

D. higher; higher

QUESTION: 83

The MAJOR effect of operating centrifugal pumps in PARALLEL is:

A. increased system pressure.

B. increased system flow rate.

C. decreased system pressure.

D. decreased system flow rate.

QUESTION: 84

A common method used in emergency cooling water systems to REDUCE the flow rate lost from a pipe rupture, thereby ENSURING design cooling flow capability, is the installation of:

A. venturis

B. orifices

C. redundant pumps

D. pipe hangers

QUESTION: 85

The heat transfer mechanism that accounts for the MAJORITY of core heat removal during a LOCA after total core voiding is:

A. conduction.

B. convection.

C. radiolysis.

D. radiation.

QUESTION: 86

As fluid flow rate INCREASES through the tubes of a shell-and-tube heat exchanger, the laminar film thickness _____, which causes heat transfer rate to _____.

A. increases; increase

B. increases; decrease

C. decreases; increase

D. decreases; decrease

QUESTION: 87

Departure from nucleate boiling (DNB) occurs when steam bubbles begin to blanket the fuel rod, resulting in a rapid _____ in heat transfer rate and a rapid _____ in delta-T (fuel rod minus coolant temperature).

A. decrease; increase

B. decrease; decrease

C. increase; increase

D. increase; decrease

QUESTION: 88

Refer to the figure below for the following question.

For the hypothetical fuel coolant channel shown below, identify along its length where TRANSITION BOILING begins.

A. 1

B. 2

C. 3

D. 4

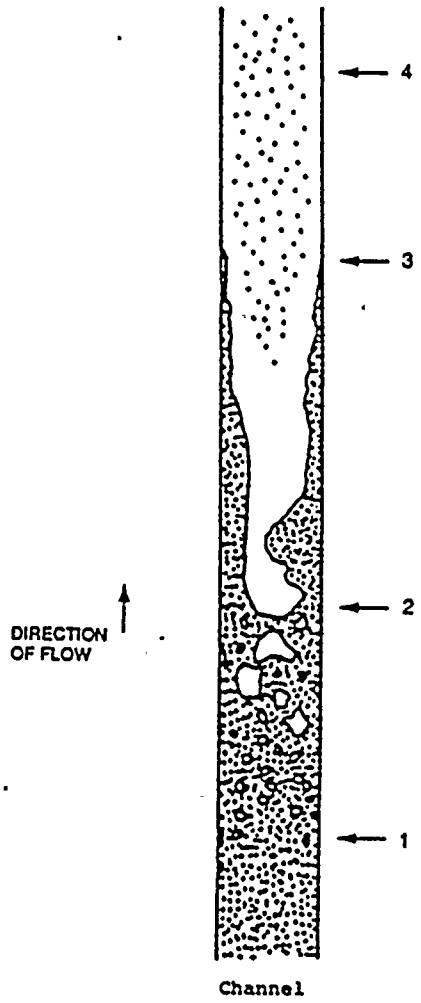

QUESTION: 89

Refer to the figure below for the following question.

On the figure of a pool-boiling curve, the point at which heat flux is increasing and the critical heat flux has been reached (point B), marks the onset of:

A. single-phase convection.

B. film boiling.

C. nucleate boiling.

D. partial film boiling.

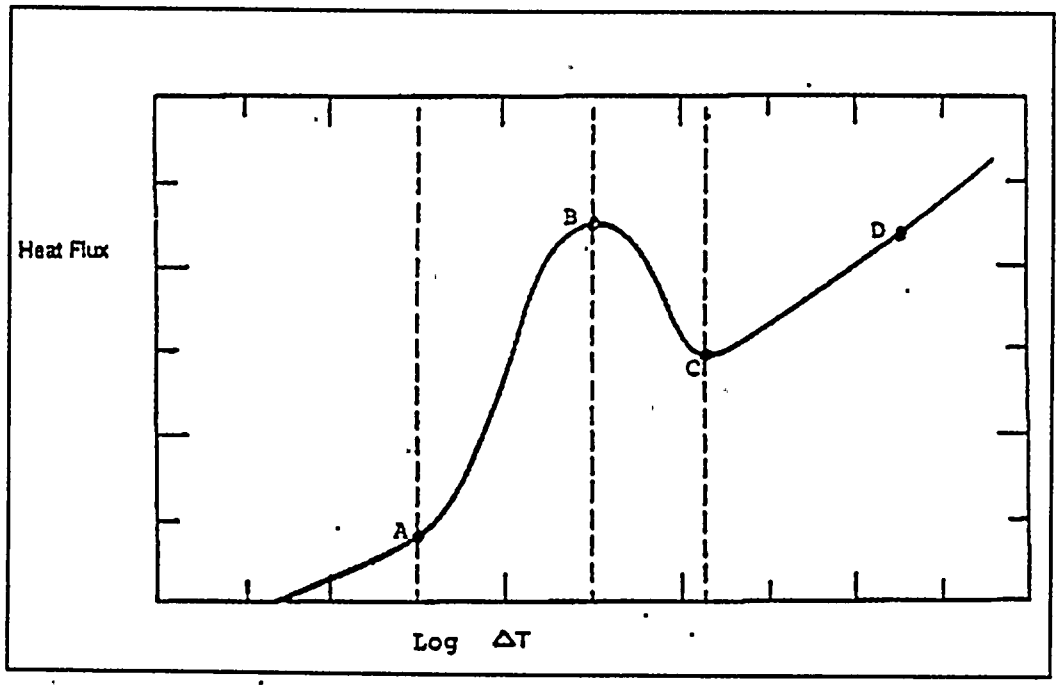

QUESTION: 90

Void fraction is the ratio of the _____ of steam to the _____ of steam/water mixture at a given elevation in the fuel coolant channel.

A. volume; mass

B. mass; mass
C. volume; volume

D. mass; volume

QUESTION: 91

Core orificing is used in the reactor core because the orifices:

A. counteract the buoyant force of the bubbles accelerating flow in the high-powered bundles.

B. improve the distribution of core flow to offset the effect of increasing quality on bundle flow.

C. increase core delta-P so that minor crud buildup on fuel bundles will not adversely affect flow.

D. decrease flow during periods of natural circulation to increase the void coefficient.

QUESTION: 92

The reactor is at 100 percent power when a trip of the recirculation pumps occurs. Void fraction percentage will:

A. stay the same due to minimal changes in reactor pressure.

B. decrease because steam bubbles are no longer being generated.

C. increase because steam bubbles are no longer being swept away.

D. decrease initially due to reactor pressure increase, then return to initial value.

QUESTION: 93

With the reactor shutdown and the reactor recirculating pumps isolated, it is important to monitor reactor vessel SKIN TEMPERATURES because:

A. cooldown rates are easily exceeded with the recirculation pumps isolated.

B. these temperatures will provide one of the first indications of thermal stratification.

C. these temperatures are the only reliable source of reactor recirculation loop temperature.

D. these temperatures must be maintained constant with no flow in the core.

QUESTION: 94

Which one of the following parameter changes will cause an INCREASE in the critical power of a fuel bundle?

A. The subcooling of the coolant entering the bundle decreases.

B. The local peaking factor increases.

C. The coolant flow through the bundle increases.

D. The axial power peak shifts from the bottom to the top of the bundle.

QUESTION: 95

Operating the reactor below the linear heat generation rate (LHGR) thermal limit prevents:

A. cracking of the fuel cladding due to high stress from fuel pellet expansion.

B. melting of the fuel cladding due to a cladding temperature exceeding 2,200 degrees F during an anticipated transient without a scram (ATWS).

C. cracking of the fuel cladding due to the lack of cooling caused by departure from nucleate boiling.

D. gross fuel cladding failure due to a lack of cooling following a loss of coolant accident (LOCA).

QUESTION: 96

Maximum fraction of limiting power density (MFLPD) is defined as _____ and must be maintained _____. [LHGR is the linear heat generation rate.]

A. LHGR-actual/LHGR-limit; <1

B. LHGR-actual/LHGR-limit; >1

C. LHGR-limit/LHGR-actual; <1

D. LHGR-limit/LHGR-actual; >1

QUESTION: 97

The amount of heat stored in the fuel, resulting from the operating KW/ft existing in the fuel PRIOR to a scram, describes the:

A. average planar linear heat generation rate (APLHGR).

B. maximum average planar linear heat generation rate (MAPLHGR).

C. preconditioning interim operating management recommendations (PCIOMR).

D. maximum average planar linear heat generation rate limit (MAPRAT).

QUESTION: 98

Which one of the following expressions describes the critical power ratio?

A. Actual bundle power/critical power

B. Critical power/actual bundle power

C. Average bundle power/critical power

D. Critical power/average bundle power

QUESTION: 99

Which of the following describes the effect of fast neutron irradiation on a reactor pressure vessel (RPV)?

A. Increased fatigue crack growth rate

B. Decreased stress which must be applied to the RPV to cause plastic deformation

C. Increased ductility

D. Increased nil-ductility reference transition temperature

QUESTION: 100

A COMPRESSIVE stress will be applied to the OUTSIDE wall of the reactor vessel as a result of:

A. neutron embrittlement of the reactor vessel.

B. increasing RCS pressure.

C. performing an RCS cooldown.

D. performing an RCS heatup.

ENCLOSURE 2

GENERIC FUNDAMENTALS EXAMINATION SECTION (GFES)

BOILING WATER REACTOR

FORM B

ENCLOSURE 2

FEBRUARY 1990 BWR GFE - FORM B ANSWER KEY

1.	C	26.	A	51.	A	76.	C
2.	A	27.	C	52.	A	77.	B
3.	A	28.	B	53.	A	78.	D
4.	A	29.	A	54.	B	79.	D
5.	B	30.	DELETED	55.	D	80.	D
6.	B	31.	A	56.	C	81.	A
7.	D	32.	A	57.	DELETED	82.	A
8.	A	33.	C	58.	A	83.	C
9.	D	34.	B	59.	C	84.	B
10.	C	35.	C	60.	A	85.	A
11.	DELETED	36.	B	61.	B	86.	D
12.	C	37.	B	62.	C	87.	B
13.	A	38.	A	63.	A	88.	D
14.	D	39.	B	64.	D	89.	C
15.	C	40.	B	65.	C	90.	A
16.	B	41.	D	66.	A	91.	B
17.	D	42.	C	67.	C	92.	C
18.	B	43.	A	68.	A	93.	D
19.	C	44.	C	69.	B	94.	A
20.	A	45.	D	70.	C	95.	A
21.	A	46.	C	71.	B	96.	B
22.	D	47.	B	72.	C	97.	A
23.	A	48.	C	73.	A	98.	D
24.	C	49.	B	74.	A	99.	D
25.	B	50.	C	75.	D	100.	C

RULES AND GUIDELINES FOR THE GENERIC FUNDAMENTALS EXAMINATION

During the administration of this examination the following rules apply:

(1) Print your name in the blank provided on the cover sheet of the examination.

(2) Fill in the name of your facility.

(3) Fill in the ID-Number you were given at registration.

(4) Fill in your start and stop times at the appropriate time.

(5) Three handouts are provided for your use during the examination, an Equations and Conversions sheet, instructions for filling out the answer sheet, and Steam Table booklets.

(6) Use only the answer sheet provided. Credit will only be given for answers properly marked on this sheet. Follow the instructions for filling out the answer sheet.

(7) Scrap paper will be provided for calculations.

(8) Any questions about an item on the examination should be directed to the examiner only.

(9) Cheating on the examination will result in the automatic forfeiture of this examination. Cheating could also result in severe penalties.

(10) Restroom trips are limited. Only ONE examinee may leave the room at a time. In order to avoid the appearance or possibility of cheating, avoid all contact with anyone outside of the examination room.

(11) After you have completed the examination, sign the statement on the cover sheet indicating that the work is your own and you have not received or been given any assistance in completing the examination.

(12) Turn in your examination materials, answer sheet on top, followed by the exam booklet, then examination aids - steam table booklets, handouts and scrap paper used during the examination.

(13) After turning in your examination materials, leave the examination area, as defined by the examiner. If after leaving you are found in the examination area while the examination is in progress, your examination may be forfeited.

EQUATION SHEET

$\dot{Q} = \dot{m}\, c_p\, \Delta T$

$\dot{Q} = \dot{m}\, \Delta h$

$\dot{Q} = UA\, \Delta T$

$SUR = 26.06/\tau$

$SUR = \dfrac{26.06\ (\lambda_{eff}\ \rho)}{(\beta - \rho)}$

$P = P_0\ 10^{SUR(t)}$

$P = P_0\ e^{(t/\tau)}$

$\tau = (\ell^*/\rho) + [(\bar{\beta} - \rho)/\lambda_{eff}\rho]$

$\rho = (K_{eff} - 1)/K_{eff}$

$\rho = \Delta K_{eff}/K_{eff}$

Cycle Efficiency $= \dfrac{\text{Net Work (out)}}{\text{Energy (in)}}$

$SCR = S/(1 - K_{eff})$

$CR_1\ (1 - K_{eff})_1 = CR_2\ (1 - K_{eff})_2$

$M = 1/(1 - K_{eff}) = CR_1/CR_0$

$M = \dfrac{(1 - K_{eff})_0}{(1 - K_{eff})_1}$

$SDM = (1 - K_{eff})/K_{eff}$

$Pwr = W_f\ \dot{m}$

$\tau = \ell^*/(\rho - \bar{\beta})$

$\ell^* = 1 \times 10^{-5}$ seconds

$\lambda_{eff} = 0.1$ seconds^{-1}

---

1 Curie $= 3.7 \times 10^{10}$ dps

1 hp $= 2.54 \times 10^3$ BTU/hr

1 BTU $= 778$ ft-lbf

°C $= 5/9$ (°F - 32)

1 kg $= 2.21$ lbm

1 Mw $= 3.41 \times 10^6$ BTU/hr

°F $= 9/5$ °C + 32

QUESTION: 1

Delayed neutrons are neutrons that:

A. have reached thermal equilibrium with the surrounding medium.

B. are born within 10-14 seconds of the fission event.

C. are born at the lowest average kinetic energy of all fission neutrons.

D. are responsible for the majority of U-235 fissions.

QUESTION: 2

The interaction in the reactor core that is MOST efficient in thermalizing neutrons for fission occurs with the:

A. hydrogen atoms in the water molecules.

B. oxygen atoms in the water molecules.

C. boron atoms in the control rods.

D. zirconium atoms in the fuel cladding.

QUESTION: 3

Which of the following conditions describes a reactor that is EXACTLY critical?

A. Keff = 1; delta-K/K = 0

B. Keff = 1; delta-K/K = 1

C Keff = 0; delta-K/K = 0

D. Keff = 0; delta-K/K = 1

QUESTION: 4

When determining shutdown margin for an operating reactor, how many control rod assemblies are assumed to remain FULLY withdrawn?

A. A single control rod of the highest reactivity worth

B. A symmetrical pair of control rods of the highest reactivity worth

C. A single control rod of average reactivity worth

D. A symmetrical pair of control rods of average reactivity worth

QUESTION: 5

During a reactor startup, the intermediate range monitor (IRM) readings go from 30 percent to 65 percent on the same range in 2 minutes with no operator action. Which of the following is the average REACTOR PERIOD during the power increase?

A. 120 seconds

B. 155 seconds

C. 173 seconds

D. 357 seconds

QUESTION: 6

Without delayed neutrons in the neutron cycle, when positive reactivity is added to a critical reactor, the reactor will:

A. not be able to attain criticality.

B. begin an uncontrollable rapid power increase.

C. experience a rapid but controllable power increase.

D. experience a prompt jump in power level followed by a decrease to the initial power level.

QUESTION: 7

As the core ages, the amount of positive reactivity required to make the reactor prompt critical will _____ because the effective delayed neutron fraction _____.

A. increase; increases

B. increase; decreases

C. decrease; increases

D. decrease; decreases

QUESTION: 8

The moderator temperature coefficient describes a change in _____ resulting from a change in _____.

A. reactivity; moderator temperature

B. Keff; moderator temperature

C. moderator temperature; reactivity

D. moderator temperature; Keff

QUESTION: 9

During a hot reactor startup with the reactor coolant at 520 degrees F, excessive rod withdrawal results in a 10 second reactor period. Without any further operator action, the _____ coefficient will respond FIRST to reduce the rate of the power increase.

A. pressure

B. void

C. moderator

D. doppler

QUESTION: 10

The reactor is operating at steady-state 50 percent power. A control rod is inserted a short distance (from 08 to 02 notches). Assuming that recirculation flow remains constant, reactor power will:

A. increase and stabilize at a higher value.

B. increase temporarily, then return to the original value.

C. decrease and stabilize at a lower value.

D. decrease temporarily, then return to the original value.

QUESTION: 11

Neutron flux shaping within a reactor core is designed to:

A. minimize the effects of rod shadowing.

B. ensure that more power is generated in the lower portion of the core.

C. ensure that local core power limits are not exceeded.

D. minimize the effects of an ejected rod.

QUESTION: 12

The TWO characteristics of Xe-135 that result in it being a MAJOR reactor poison is its relatively _____ half-life and relatively _____ absorption cross section.

A. short; large

B. short; small

C. long; large

D. long; small

QUESTION: 13

The MAJOR contributor to the production of Xe-135 in a reactor operating at full power is:

A. the radioactive decay of iodine.

B. the radioactive decay of promethium.

C. direct production from fission of U-235.

D. direct production from fission of U-238.

QUESTION: 14

The two methods of Xe-135 REMOVAL from a reactor operating at full power are:

A. neutron scatter and beta decay.

B. alpha decay and neutron absorption.

C. fission and alpha decay.

D. beta decay and neutron absorption.

QUESTION: 15

Following a 2 week shutdown, a reactor is taken critical and ramped to full power in 6 hours. How long will it take to achieve an equilibrium xenon condition after the reactor reaches full power?

A. 1 to 2 hours

B. 8 to 10 hours

C. 40 to 50 hours

D. 100 to 120 hours

QUESTION: 16

A reactor has been operating at 25 percent power for 5 days when a scram occurs. Xe-135 will PEAK in approximately:

A. 2 hours.

B. 5 hours.

C. 10 hours.

D. 20 hours.

QUESTION: 17

A reactor has been operating at full power for several weeks when a scram occurs. When the reactor is brought critical 5 hours later, Xe-135 concentration will be HIGHEST in the _____ of the core, which causes thermal flux to be HIGHEST in the _____ of the core.

A. periphery; center

B. periphery; periphery

C. center; center

D. center; periphery

QUESTION: 18

The reactor is being started up and taken to rated power following an extended outage. (Assume a constant ramp rate.) To compensate for the effect of Xenon-135 while INCREASING reactor power, it will be necessary to _____ rods and _____ recirculation flow.

A. withdraw; decrease

B. withdraw; increase

C. insert; increase

D. insert; decrease

QUESTION: 19

A reactor has been operating at full power for 10 weeks when a scram occurs. Twenty-four hours later, the reactor is brought critical and power level is maintained on range 5 of the intermediate range monitors. To maintain a CONSTANT power level for the next several hours, control rods must be:

A. inserted, because the critical reactor will cause a high rate of xenon burnout.

B. maintained at the present height as xenon establishes its equilibrium value for this power level.

C. inserted, because xenon will approximately follow its normal decay curve.

D. withdrawn, because xenon concentration is increasing toward equilibrium.

QUESTION: 20

Burnable poisons are loaded into the core to:

A. allow the initial core to have excess reactivity to extend core life.

B. allow shallow rods to compensate for core burnout.

C. reduce the amount of time required for xenon to peak following a scram.

D. provide for flux shaping in areas of deep rods.

QUESTION: 21

A reactor is operating at 100 percent power and flow. Reactor power is reduced by driving control rods in. (Recirculating pump speed remains constant.) What is the effect on core flow?

A. Core flow will increase, due to the decrease in two-phase flow resistance.

B. Core flow will remain constant, because reactor power does not affect core flow.

C. Core flow will decrease, due to an increase in two-phase flow resistance.

D. Core flow will decrease, due to the decrease in recirculation ratio.

QUESTION: 22

While withdrawing control rods during a reactor startup, the count rate doubles. If the SAME amount of reactivity that caused the first doubling is added again, the count rate will _____ and stabilize at a higher level and the reactor will be _____.

A. double; subcritical

B. double; critical

C. more than double; subcritical

D. more than double; critical

QUESTION: 23

A reactor startup is in progress with Keff at 0.995 and stable source range indication. If Keff is increased to 0.997 by control rod withdrawal, reactor period will initially become _____ and then _____.

A. shorter; approach infinity

B. shorter; continue to gradually shorten

C. longer; approach infinity

D. longer; continue to gradually lengthen

QUESTION: 24

With Keff = 0.985, how much reactivity must be added to make the reactor critical?

A. 1.32% delta-k/k

B. 1.42% delta-k/k

C. 1.52% delta-k/k

D. 1.62% delta-k/k

QUESTION: 25

During a reactor startup, a stable positive 30 second reactor period is achieved with no further reactivity addition. The reactor is:

A. exactly critical.

B. supercritical.

C. subcritical.

D. prompt critical.

QUESTION: 26

Following a normal reactor shutdown, steam production may continue for some period of time, with the RATE of steam production dependent upon:

A. the previous power history of the plant and the time elapsed since shutdown.

B. the amount of time required for the reactor power level to drop below the point of adding heat.

C. the reactor power level at the time of shutdown and initial reactor pressure vessel water level.

D. the recirculation flow rate and the pressure being maintained in the RCS.

QUESTION: 27

Upon reaching criticality during a reactor startup, the operator establishes a positive reactor period. Upon reaching the point of adding heat, the period will become _____ due to the _____ reactivity feedback of moderator and fuel temperature.

A. shorter; negative

B. shorter; positive

C. longer; negative

D. longer; positive

QUESTION: 28

During a normal power increase from 20 percent to 100 percent, the SMALLEST negative reactivity addition is caused by the change in:

A. fuel temperature.

B. moderator temperature.

C. xenon concentration.

D. void content.

QUESTION: 29.

Refer to the figure below for the following question.

A differential pressure manometer filled with water is installed across an orifice in a ventilation duct to determine the direction of airflow. With the ventilation conditions as shown, the pressure at P1 is _____ than P2, and airflow is _____.

A. greater; left to right

B. greater; right to left

C. less; left to right

D. less; right to left

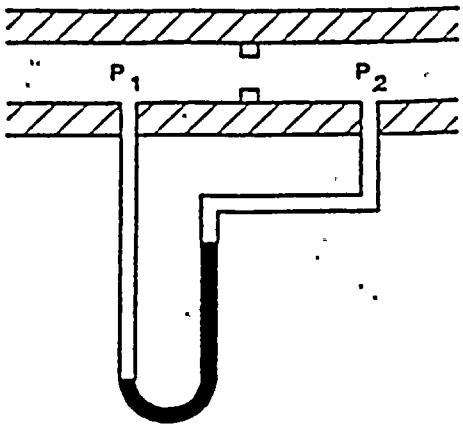

QUESTION: 30

Which one of the following has the LOWEST quality?

A. Superheated steam

B. Subcooled liquid

C. Saturated steam

D. Saturated liquid

QUESTION: 31

The saturation pressure for water at 328 degrees F is:

A. 85 psig.

B. 100 psig.

C. 115 psig.

D. 130 psig.

QUESTION: 32

During jet pump operation, a high pressure, low velocity fluid flow is supplied through a _____ where the pressure drops and the velocity increases, creating a low pressure area in the _____ section.

A. nozzle; throat

B. nozzle; diffuser

C. diffuser; throat

D. diffuser; nozzle

QUESTION: 33

Condenser pressure is 1.0 psia. During the cooling process in the condenser, the LP turbine exhaust reaches a temperature of 101 degrees F, at which time it is a:

A. saturated liquid.

B. saturated vapor.

C. subcooled liquid.

D. superheated vapor.

QUESTION: 34

Which of the following is the MOST PROBABLE steam plant location for superheated steam?

A. The outlet of the high pressure turbine

B. The outlet of the moisture separators/reheaters

C. The inlet of the high pressure turbine

D. The outlet of the low pressure turbine

QUESTION: 35

A sudden stop of fluid flow in a piping system, due to rapid closure of an isolation valve, will MOST LIKELY result in:

A. check valve slamming.

B. pump runout.

C. water hammer.

D. pressurized thermal shock.

QUESTION: 36

Cavitation is the formation of vapor bubbles in the _____ pressure area of a pump followed by the _____ of these bubbles within the pump casing.

A. low; expansion

B. low; collapse

C. high; expansion

D. high; collapse

QUESTION: 37

The available net positive suction head (NPSH) of a centrifugal pump:

A. decreases with increased subcooling to the pump.

B. decreases with an increase in pump flow rate.

C. increases as the suction temperature increases.

D. decreases as pump discharge pressure increases.

QUESTION: 38

A centrifugal pump is being returned to service after maintenance. The operator FAILS to vent the pump properly. When the pump is started the operator should see _____ capacity and _____ discharge head.

A. lower; lower

B. lower; higher

C. higher; lower

D. higher; higher

QUESTION: 39

The MAJOR effect of operating centrifugal pumps in PARALLEL is:

A. increased system pressure.

B. increased system flow rate.

C. decreased system pressure.

D. decreased system flow rate.

QUESTION: 40

A common method used in emergency cooling water systems to REDUCE the flow rate lost from a pipe rupture, thereby ENSURING design cooling flow capability, is the installation of:

A. venturis

B. orifices

C. redundant pumps

D. pipe hangers

QUESTION: 41

The heat transfer mechanism that accounts for the MAJORITY of core heat removal during a LOCA after total core voiding is:

A. conduction.

B. convection.

C. radiolysis.

D. radiation.

QUESTION: 42

As fluid flow rate INCREASES through the tubes of a shell-and-tube heat exchanger, the laminar film thickness _____, which causes heat transfer rate to _____.

A. increases; increase

B. increases; decrease

C. decreases; increase

D. decreases; decrease

QUESTION: 43

Departure from nucleate boiling (DNB) occurs when steam bubbles begin to blanket the fuel rod, resulting in a rapid _____ in heat transfer rate and a rapid _____ in delta-T (fuel rod minus coolant temperature).

A. decrease; increase

B. decrease; decrease

C. increase; increase

D. increase; decrease

QUESTION: 44

Refer to the figure below for the following question.

For the hypothetical fuel coolant channel shown below, identify along its length where TRANSITION BOILING begins.

A. 1

B. 2

C. 3

D. 4

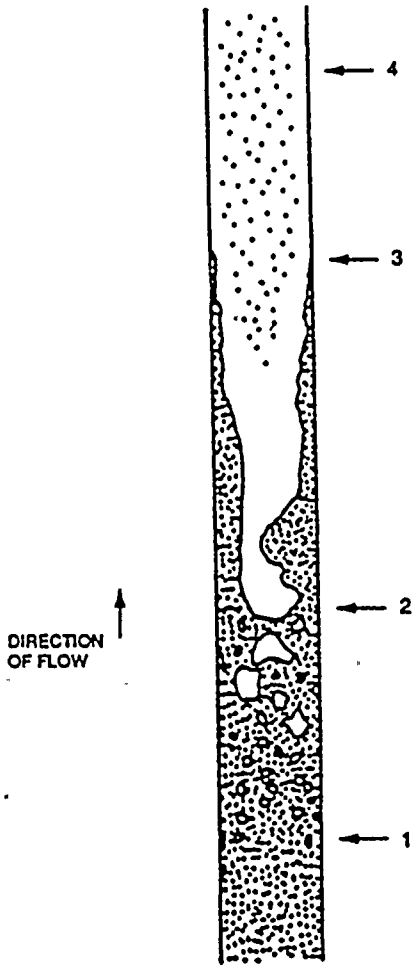

Channel

QUESTION: 45

Refer to the figure below for the following question.

On the figure of a pool-boiling curve, the point at which heat flux is increasing and the critical heat flux has been reached (point B), marks the onset of:

A. single-phase convection.

B. film boiling.

C. nucleate boiling.

D. partial film boiling.

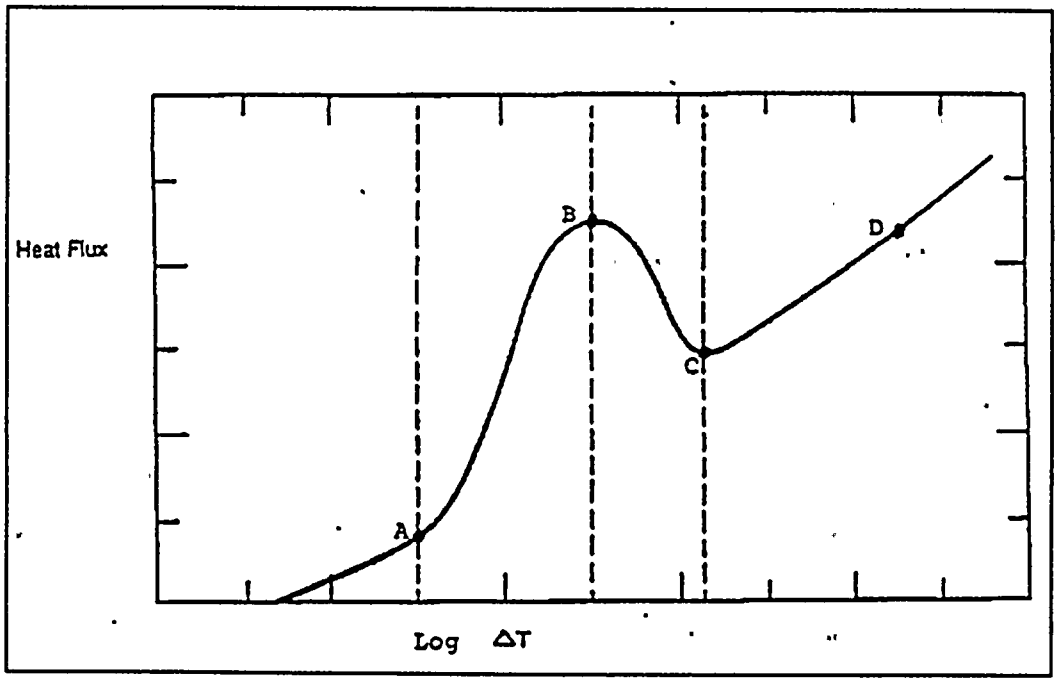

QUESTION: 46

Void fraction is the ratio of the _____ of steam to the _____ of steam/water mixture at a given elevation in the fuel coolant channel.

A. volume; mass

B. mass; mass

C. volume; volume

D. mass; volume

QUESTION: 47

Core orificing is used in the reactor core because the orifices:

A. counteract the buoyant force of the bubbles accelerating flow in the high-powered bundles.

B. improve the distribution of core flow to offset the effect of increasing quality on bundle flow.

C. increase core delta-P so that minor crud buildup on fuel bundles will not adversely affect flow.

D. decrease flow during periods of natural circulation to increase the void coefficient.

QUESTION: 48

The reactor is at 100 percent power when a trip of the recirculation pumps occurs. Void fraction percentage will:

A. stay the same due to minimal changes in reactor pressure.

B. decrease because steam bubbles are no longer being generated.

C. increase because steam bubbles are no longer being swept away.

D. decrease initially due to reactor pressure increase, then return to initial value.

QUESTION: 49

With the reactor shutdown and the reactor recirculating pumps isolated, it is important to monitor reactor vessel SKIN TEMPERATURES because:

A. cooldown rates are easily exceeded with the recirculation pumps isolated.

B. these temperatures will provide one of the first indications of thermal stratification.

C. these temperatures are the only reliable source of reactor recirculation loop temperature.

D. these temperatures must be maintained constant with no flow in the core.

QUESTION: 50

Which one of the following parameter changes will cause an INCREASE in the critical power of a fuel bundle?

A. The subcooling of the coolant entering the bundle decreases.

B. The local peaking factor increases.

C. The coolant flow through the bundle increases.

D. The axial power peak shifts from the bottom to the top of the bundle.

QUESTION: 51

Operating the reactor below the linear heat generation rate (LHGR) thermal limit prevents:

A. cracking of the fuel cladding due to high stress from fuel pellet expansion.

B. melting of the fuel cladding due to a cladding temperature exceeding 2,200 degrees F during an anticipated transient without a scram (ATWS).

C. cracking of the fuel cladding due to the lack of cooling caused by departure from nucleate boiling.

D. gross fuel cladding failure due to a lack of cooling following a loss of coolant accident (LOCA).

QUESTION: 52

Maximum fraction of limiting power density (MFLPD) is defined as _____ and must be maintained _____. [LHGR is the linear heat generation rate.]

A. LHGR-actual/LHGR-limit; <1

B. LHGR-actual/LHGR-limit; >1

C. LHGR-limit/LHGR-actual; <1

D. LHGR-limit/LHGR-actual; >1

QUESTION: 53

The amount of heat stored in the fuel, resulting from the operating KW/ft existing in the fuel PRIOR to a scram, describes the:

A. average planar linear heat generation rate (APLHGR).

B. maximum average planar linear heat generation rate (MAPLHGR).

C. preconditioning interim operating management recommendations (PCIOMR).

D. maximum average planar linear heat generation rate limit (MAPRAT).

QUESTION: 54

Which one of the following expressions describes the critical power ratio?

A. Actual bundle power/critical power

B. Critical power/actual bundle power

C. Average bundle power/critical power

D. Critical power/average bundle power

QUESTION: 55

Which of the following describes the effect of fast neutron irradiation on a reactor pressure vessel (RPV)?

A. Increased fatigue crack growth rate

B. Decreased stress which must be applied to the RPV to cause plastic deformation

C. Increased ductility

D. Increased nil-ductility reference transition temperature

QUESTION: 56

A COMPRESSIVE stress will be applied to the OUTSIDE wall of the reactor vessel as a result of:

A. neutron embrittlement of the reactor vessel.

B. increasing RCS pressure.

C. performing an RCS cooldown.

D. performing an RCS heatup.

QUESTION: 57

Which of the following statements describes the operation of reactor pressure vessel safety valves?

A. When the activating pressure for a safety valve returns to the lift setpoint, a combination of air and steam pressure closes the valve.

B. As reactor pressure increases to the lift setpoint, the pressure overcomes spring tension on the valve operator, causing the valve to fully open.

C. As the disk on a safety valve lifts, less pressure is exerted on the disk, reducing the upward force on the disk, and thereby regulating the valve position.

D. When the safety valve lift setpoint is reached, a pilot valve opens allowing reactor pressure to fully open the main valve disk.

QUESTION: 58

If a pressure control valve at the outlet of a heat exchanger is opened, system flow rate will _____ and head loss will _____.

A. increase; decrease

B. increase; increase

C. decrease; decrease

D. decrease; increase

QUESTION: 59

All of the following are acceptable methods for verifying the position of a SHUT manual gate valve, EXCEPT:

A. observing the position of the valve stem using handwheel or position indicators.

B. observing indicators for plant parameters, such as temperature, pressure and level.

C. attempting to turn the handwheel in the "open" direction.

D. attempting to turn the handwheel in the "closed" direction.

QUESTION: 60

The manual declutch lever of a motor-operated valve _____ the motor and _____ the handwheel.

A. disengages; engages

B. deenergizes; engages

C. engages; disengages

D. reenergizes; disengages

QUESTION: 61

Check valves are used to:

A. relieve system overpressure, thereby ensuring system integrity.

B. prevent backflow through non-operating components or flowpaths.

C. maintain a constant backpressure to control flow rate.

D. prevent pump cavitation by keeping systems full of liquid.

QUESTION: 62

Operators should use BOTH hands on valve handwheels when positioning manual valves to:

A. overcome the resistance of installed locking devices.

B. control the rate of valve motion to prevent water hammer.

C. ensure system pressure, temperature, and flow are controlled during valve motion.

D. control lateral force to prevent bending the valve stem.

QUESTION: 63

Which one of the following failures of a wet reference leg differential pressure (D/P) level transmitter will cause its level indicator to indicate the LOWEST level?

A. The D/P cell diaphragm ruptures.

B. The reference leg ruptures.

C. The variable leg ruptures.

D. The equalizing line ruptures.

QUESTION: 64

If a resistance temperature detector (RTD) develops an OPEN circuit (bridge circuit remains intact), indication will fail:

A. high.

B. low.

C. as is.

D. to mid-scale.

QUESTION: 65

A differential pressure level transmitter with its reference leg vented to atmosphere is being used in a control loop to maintain liquid level in a vented tank at 50 percent. The transmitter was calibrated at a tank temperature of 200 degrees F. If the tank temperature gradually falls to 100 degrees F, the control loop will cause ACTUAL level to:

A. be maintained at 50 percent.

B. increase and remain above 50 percent.

C. first increase, then decrease to 50 percent.

D. decrease and remain below 50 percent.

QUESTION: 66

A simple bellows pressure detector is located in the reactor containment with its low pressure side vented to the containment. If a main steam break raises containment pressure by 40 psig, the associated pressure indication (disregarding any temperature effect on the bellows) will:

A. increase by the square root of 40 psig.

B. increase by 40 psig.

C. decrease by 40 psig.

D. stay constant.

QUESTION: 67

A differential pressure (D/P) cell is being used to measure flow rate in a cooling water system. Flow rate is indicating 75 percent of scale. If the D/P cell diaphram ruptures, INDICATED flow rate will:

A. go to 0 percent.

B. go to 100 percent (full-scale).

C. remain the same.

D. move slowly to 50 percent (mid-scale).

QUESTION: 68

A bourdon-tube pressure detector that is indicating 50 percent of scale is suddenly exposed to a pressure transient that extends the detector 75 percent beyond its upper-range value. Actual pressure returns to its original value. Assuming the detector remains intact, the affected pressure indication will initially go off-scale high, and then:

A. become unpredictable until the instrument is calibrated.

B. return to a pressure less than original pressure.

C. return to original pressure.

D. return to a pressure greater than original pressure.

QUESTION: 69

Most of the electrons collected in a fission chamber are released as a result of ionizations caused DIRECTLY by:

A. fission fragments.

B. fission gammas.

C. fission betas.

D. fissionable materials.

QUESTION: 70

Which of the following statements describes the use of a self-reading pocket dosimeter (SRPD)?

A. SRPDs hold their charge indefinitely when removed from a radiation field.

B. SRPD readings must be considered inaccurate when they are dropped.

C. SRPDs can be used to record beta and gamma radiation.

D. The output of an SRPD is a dose rate in mr/hr.

QUESTION: 71

The range of values around the setpoint of a measured variable where NO ACTION occurs in an automatic flow controller is called:

A. deviation.

B. error.

C. deadband.

D. bias.

QUESTION: 72

The governor of an emergency diesel generator (D/G) DIRECTLY senses D/G _____ and adjusts D/G _____ flow to maintain a relatively constant D/G frequency.

A. load, air

B. speed, fuel

C. load, fuel

D. speed, air

QUESTION: 73

The output pressure of a pneumatic controller is typically insufficient to drive a valve actuator accurately. To overcome this problem, a control loop would NORMALLY employ a:

A. valve actuating lead/lag unit.

B. pressure regulator.

C. valve positioner.

D. filter drive unit.

QUESTION: 74

Which of the following changes in pump operating parameters will DIRECTLY lead to pump cavitation in a centrifugal pump that is operating in a closed-loop system?

A. Steadily increasing pump inlet temperature.

B. Steadily decreasing pump flow rate (by reducing pump speed).

C. Steadily increasing pump suction pressure.

D. Steadily increasing pump discharge pressure.

QUESTION: 75

Gas binding in a centrifugal pump can be prevented by _____ prior to pump start.

A. venting the pump

B. lowering suction pressure

C. throttling the discharge valve

D. shutting the discharge valve

QUESTION: 76

The correct way to start most LARGER motor-driven centrifugal pumps is with the pump discharge valve:

A. in any position.

B. throttled to midposition.

C. fully open.

D. fully closed.

QUESTION: 77

A multispeed centrifugal pump is operating at 1800 rpm, providing a flow of 400 gpm at 20 psig. If the pump speed is increased to 3600 rpm, the new pump discharge pressure will be:

A. 20 psig

B. 40 psig

C. 80 psig

D. 160 psig

QUESTION: 78

Which one of the following conditions will result in a DECREASE in the available recirculating pump net positive suction head (NPSH)?

A. Carry-under decreases.

B. Recirculation flow rate increases.

C. Feedwater inlet subcooling increases.

D. Feedwater flow rate increases.

QUESTION: 79

A constant-speed centrifugal pump motor draws the LEAST current when the pump is:

A. at runout conditions.

B. at operating conditions.

C. accelerating to normal speed during start.

D. at shutoff head.

QUESTION: 80

Failure to provide adequate minimum flow for a centrifugal pump can DIRECTLY result in:

A. discharge piping overpressurization.

B. suction piping overpressurization.

C. excessive pump leakoff.

D. pump overheating.

QUESTION: 81

A centrifugal pump is operating at rated conditions in a closed system with all valves fully open. If the pump suction valve is THROTTLED to 50 percent, pump discharge pressure will _____ and flow will _____.

A. increase; decrease

B. decrease; increase

C. increase; increase

D. decrease; decrease

QUESTION: 82

The main generator is connected to the grid. Which of the following characteristics will an UNDEREXCITED generator exhibit?

A. Negative megavars (vars in) and a leading power factor

B. Positive megavars (vars out) and a leading power factor

C. Positive megavars (vars out) and a lagging power factor

D. Negative megavars (vars in) and a lagging power factor

QUESTION: 83

A centrifugal pump has a flow rate of 3,000 gpm and a current requirement of 200 amps. If the speed is reduced such that the flow rate is 2,000 gpm, what is the final CURRENT requirement at the new lower speed? (Assume a constant motor voltage.)

A. 59 amps

B. 89 amps

C. 133 amps

D. 150 amps

QUESTION: 84

Which of the following is the reason for LIMITING the number of motor starts in a given time period?

A. Minimizes pitting of starter contacts

B. Prevents excessive torsional stresses on motor shaft

C. Prevents overheating of motor windings

D. Minimizes axial stresses on motor bearings

QUESTION: 85

If a locked rotor occurs on an operating motor-driven pump, motor amps will:

A. increase due to the decreased pump flow.

B. increase due to the increased mechanical load.

C. decrease due to the decreased pump flow.

D. decrease due to the increased mechanical load.

QUESTION: 86

When placing a heat exchanger in service, care must be taken to introduce both fluids gradually and simultaneously to:

A. prevent excessive thermal stresses in the heat exchanger.

B. maximize heat exchanger efficiency.

C. minimize fouling of the heat exchanger tubes.

D. provide maximum control of cooling water outlet temperature.

QUESTION: 87

Refer to the figure below for the following question. All valves are identical and are initially 50 percent open.

To LOWER the temperature at point 7, the operator should adjust valve _____ in the OPEN direction.

A. A

B. B

C. C

D. D

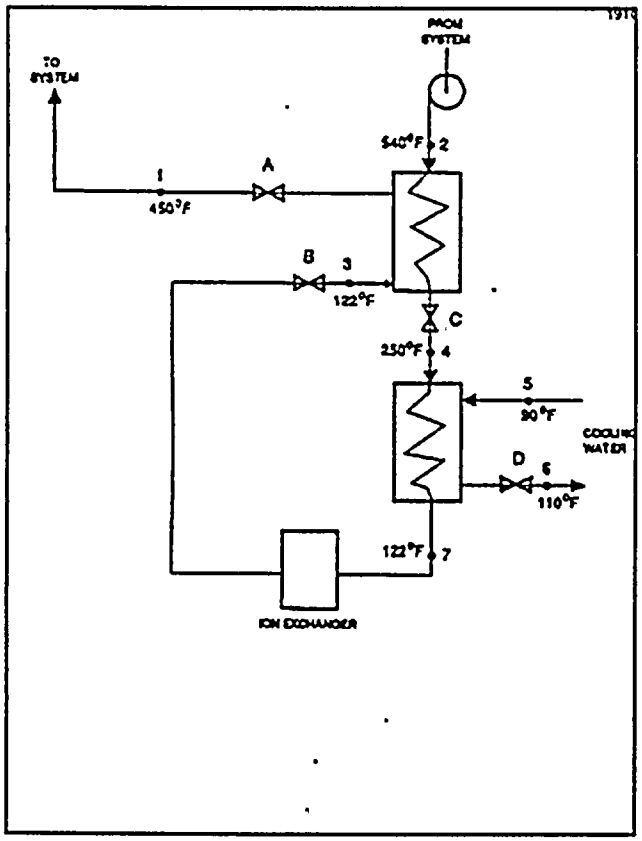

QUESTION: 88

The MAJOR thermodynamic concern resulting from RAPIDLY cooling a pressure vessel is:

A. loss of subcooling margin.

B. thermal shock.

C. loss of shutdown margin.

D. condensation.

QUESTION: 89.

During normal reactor operation, a main condenser develops an air leak which decreases vacuum at a rate of 1 in. Hg/min. Which of the following plant parameters would be the FIRST to show an INCREASE because of this condition?

A. Extraction steam flow

B. Generator megawatt output

C. Circulating water outlet temperature

D. Condensate temperature

QUESTION: 90

Refer to the figure below for the following question.

Which of the following effects would occur as a result of a tube FAILURE in the heat exchanger?

A. High pressure fluid inventory increases.

B. Flow in the low pressure system reverses.

C. Temperature in the low pressure system increases.

D. Level in the tank increases.

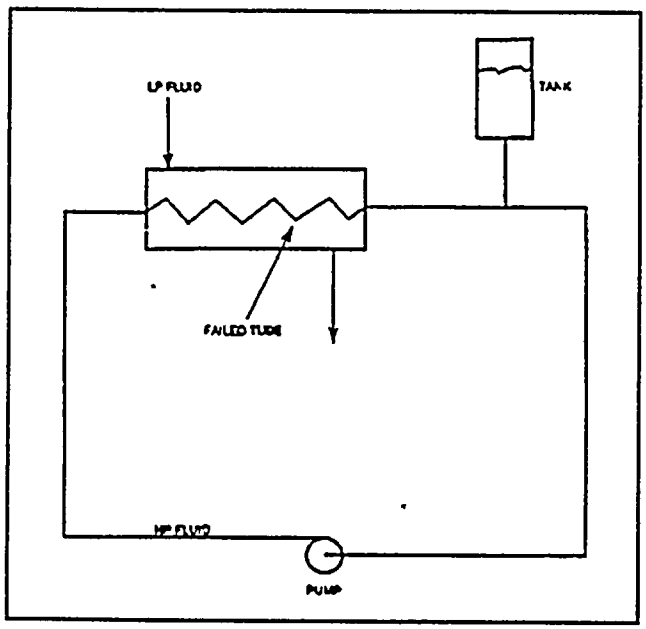

QUESTION: 91

Proper venting of a shell-and-tube heat exchanger is important because an air bubble:

A. reduces the heat transfer ability of the heat exchanger.

B. causes pressure transients within the tubes as heat load changes.

C. causes thermal shock as it moves through the heat exchanger.

D. causes flow restriction within the heat exchanger.

QUESTION: 92

Channeling in a demineralizer is undesirable because:

A. resin beads will slump to the bottom of the demineralizer causing a flow blockage.

B. portions of the resin will be completely bypassed causing outlet conductivity to increase.

C. the resulting high velocity fluid flow causes erosion of the resin beads and the release of ions.

D. the resulting high velocity fluid flow can cause mechanical damage to system piping and components.

QUESTION: 93

The buildup of scale on heat-transfer surfaces in the reactor vessel:

A. results in lower fuel temperature, which decreases the nuclear fuel cycle efficiency.

B. is controlled by complying with core thermal limits and adhering to fuel preconditioning requirements.

C. is controlled by using reactor water cleanup unit (RWCU) system and condensate system demineralizers.

D. results in higher coolant temperature, which increases overall plant efficiency.

QUESTION: 94

The temperature of the water passing through a demineralizer must be controlled because EXCESSIVELY HOT water:

A. retains impurities, thereby reducing ion exchange.

B. is less dense, allowing less water to flow through the resin bed.

C. will result in demineralizer retention element thermal expansion, thereby releasing resin.

D. will result in demineralizer resin decomposition, thereby reducing resin effectiveness.

QUESTION: 95

A result of proper demineralizer operation on water with impurities is that the exiting water will ALWAYS have:

A. lower conductivity.

B. higher conductivity.

C. lower pH.

D. higher pH.

QUESTION: 96

During maintenance activities, breakers in the open position are TAGGED and RACKED OUT to:

A. deenergize components and associated control and indication circuits.

B. provide administrative control where safety is not of prime importance.

C. maintain remote indication of breaker position (where available) to ensure personnel safety.

D. permit immediate availability of the breaker if required for emergency use.

QUESTION: 97

Which of the following local breaker indications would provide the MOST ACCURATE information for determining the position of a 4160 volt feeder breaker?

A. Overcurrent trip flags and load-side voltage

B. OPEN/CLOSED mechanical flag indication and load-side voltage

C. OPEN/CLOSED indicating lights and load-side current

D. Overcurrent trip flags and load-side current

QUESTION: 98

The function of high voltage electrical disconnects is to:

A. isolate equipment electrically during no-load conditions.

B. isolate equipment electrically during overload conditions.

C. protect circuits during overcurrent conditions.

D. protect circuits during undervoltage conditions.

QUESTION: 99

Which of the following generator conditions is MOST LIKELY to cause generator damage because of high current?

A. Tripping the output breaker under full-load conditions

B. Tripping the generator prime mover under full-load conditions

C. Closing the output breaker on a bus that has an open-circuit fault

D. Closing the output breaker on a bus that has a short-circuit fault

QUESTION: 100

If a breaker is racked in/out to the "test" position, the:

A. normal breaker opening and closing operations cannot be tested because the test position is for overload testing only.

B. breaker can only be operated manually at the switchgear.

C. remote position indication for the breaker is still operational.

D. electrical jumpers must be connected to the operating coils to operate the breaker.

ATTACHMENT 3

EXIT MEETING ATTENDEES

Licensee Personnel

J. Mueller	Operations Manager, Unit 2
B. Smith	Manager Training
R. Slade	General Supervisor, Operations Training
H. Strahley	Instructor
C. Croasmun	Instructor
P. McSparran	Training Specialist
G. Pitts	Training Coordinator

NRC Personnel

C. Sisco	Operations Engineer, Chief Examiner