NINE MILE POINT UNIT 1

REPORT FOR THE

FEEDWATER SYSTEM TRANSIENT

OF DECEMBER 19, 1987

MARCH 1988

REPORT ON THE NMP1 FEEDWATER TRANSIENT EVENT OF DECEMBER 19, 1987

TABLE OF CONTENTS

I. INTRODUCTION

On December 19, 1987 NMP1 was operating at 98% power when an event occurred which caused the operators to manually scram the reactor. At about 1810 on December 19 vibration in the Feedwater System (FWS) piping commenced, initiating a series of alarms from components affected by the vibrations; the vibrations were terminated, after being felt in the control room, by tripping the reactor and disengaging the shaft driven feedwater pump from the turbine. Subsequent examination of the FWS piping and components disclosed that a number of piping supports had been damaged, as had components of the FWS. A similar, though less severe, event had occurred in January 1978.

NMPC management took this event seriously; they adopted an approach recently instituted at NMP2 of appointing a Task Manager from outside the operating organization with the responsibility for resolution of all elements of the problems with the FWS. The Task Manager reported directly to the Manager, Nuclear Engineering and Licensing. A conservative approach to damage assessment was adopted, together with a commitment for open communication with the NRC. The decision was made that no effort to restart NMP1 would be made until the NMPC management was completely satisfied that the plant is in a safe condition and that recurrence of a similar event is improbable.

Such a determination has now been made. The sequence of events during the incident has been delineated, the extent of the damage to the plant has been determined by rigorous inspection and analysis, and the repairs to the FWS components and piping supports have been effected. Extensive

I. INTRODUCTION (Continued)

analyses have been carried out to ascertain the maximum stresses the FWS piping has been subjected to, ensure that it is sound and suitable for continued operation, and assist in determining the root cause of the event. Based on the results of the calculations, the metallurgical examination of failed parts, and the analysis of similar events in December 1975 and January 1978, a root cause of this event has been established. Based upon this root cause determination and repairs made to FWS components there is sufficient confidence of safe operation for the next cycle. A long range program is also planned to ensure safe operation beyond 1990.

II. SUMMARY AND CONCLUSIONS

On December 19, 1987, with NMP1 running at nominal full power, vibrations in the Feedwater Systems occurred. These vibrations lasted about 3 minutes, and finally became so severe that the reactor was scrammed. Subsequent investigations disclosed: that the stem of one of the two parallel flow control valves in the discharge piping of the turbine driven Feedwater Pump (FWP 13) had fractured and the plug had become separated from its stem; a small piece of the impeller in FWP 13 had broken loose; and that there were pin-hole leaks in the suction piping of FWP 11.

A major effort was undertaken to determine the effects of the transient on the Feedwater System piping and piping supports, to determine the root cause of the event, and to make all the repairs and evaluations necessary to ensure the safe operation of the plant so that it could be restarted.

II. SUMMARY AND CONCLUSIONS (Continued)

Inspections were carried out on the 322 Feedwater System piping supports. Some 84% of the supports were found to be unaffected; 10% were found to need minor repair action, with the need for repair attributed to normal operation and not the transient; and 6% (18 of the 322) were the subject of Nonconformance Reports and required repair or rework (these were assumed to have been damaged in the transient. All of the repair work will be completed prior to start up following the present refueling outage.

Analysis was completed to determine which portions of the Feedwater System piping had been stressed most severely; 22 welds were so identified and subjected to nondestructive examinations. These welds were found to be acceptable. The feedwater piping system was determined to be suitable for operation. A fatigue analysis was carried out for the four most severely stressed welds, and it was concluded that these welds retain a substantial margin of safety.

Hydraulic analyses were carried out to determine the effect of fluid forces on the piping system and, in particular, on the flow control valves. It was determined that fluid forces in the Flow Control Valve (FCV) during normal operation exerted forces on the valve plug that resulted in reverse bending stresses in the valve stem; that these stresses increased as the forces caused wear on the valve internals, and that sufficient stress could occur to cause fatigue failure of the valve stem. The valve stem/plug connection on the failed valve had high stress concentration factors that exacerbated the effect of the stresses. Fluid forces on the free plug, after it separated from the stem, caused it to open when closed and close when open. The corresponding forces on the valve body caused

II. SUMMARY AND CONCLUSIONS (Continued)

it to move in a vertical direction, and this motion caused the piping system near the valve to vibrate at its natural frequency, thereby causing sufficient amplitude of the vibrations to damage the pipe supports.

Metallurgical examinations showed that the fracture in the valve stem was indeed a fatigue failure due to reverse-bending stresses. They also showed that the leaks in the FWP 11 suction line were unrelated to the feedwater transient and that the damage to the FWP 13 impeller was a result of the FCV failure. A safety evaluation determined that the missing piece of the FWP 13 impeller will have no adverse consequences.

Examination of previous events involving failure of the FCVs (the last of which occurred in 1978) support the conclusion that a fracture in the valve stem will produce vibrations in the Feedwater System of the magnitude observed, particularly when the fracture occurs at full power.

The root cause of the event is that flow induced vibration of the plug in the flow control valve during normal operation induced a fatigue fracture in the valve stem allowing the plug to oscillate open-close and establish damaging vibrations in the feedwater piping. Increased stress concentration at a small-radius (3/8") fillet weld is believed to be a contributing factor.

A modification has been made to the stem plug connection to preclude such failure of the FCVs for a normal 2 year refueling cycle.

II. SUMMARY AND CONCLUSIONS (Continued)

The stem/plug connection has been strengthened, and the stress concentration factor has been reduced.

A design review of the Feedwater System will be carried out to determine what further modifications may be desireable.

The Feedwater System is suitable for operation when the current refueling outage is completed.

III. SEQUENCE OF EVENTS

Prior to the December 19, 1987 Feedwater System incident, the NMP1 reactor was operating at approximately 98% power, with the motor driven Feedwater Pump (FWP) 11 supplying about 1.5 million pounds/hour, FWP 12 secured, and the shaft driven FWP 13 supplying about 5.7 million pounds per hour of feedwater.

18:10:15 Prior to this time the reactor water level, the total feedwater flow and the FWP 13 flow were all recording nominal steady state values

18:10:40 First alarm from the FWP 13 seal water differential pressure sensor (DP) (F054). This alarm cleared within 1 second. It then alarmed at 18:11:20, 18:12:28 and 18:12:44 and in each case cleared within 1 second.

III. SEQUENCE OF EVENTS (Continued)

18:10:45 The first indications of a reduction in FW flow (both total and from FWP 13) occurred. Both of these flows are recorded on the NSS typer, with a scanning frequency of 30 seconds. This reduction in flow is attributed to the closing of flow control valve (FCV) 13A upon fracture of its valve stem. The flow reduction could have occurred any time between 18:10:15 and 18:10:45. The interval is consistent with the observed seal water alarm from the FWP 13 at 18:10:40.

18:11:30 Following the second alarm from the FWP 13 seal water differential pressure (not a normal event), an operator was sent expeditiously to investigate status of FWP 13.

He entered the turbine building at the 277 level and noticed water splashing on the floor from a flange at the flow element in FWP 13 discharge piping. The suction and discharge pipes to FWP 13 hanging from the ceiling at the 277 level were vibrating.

18:11:55 to 18:12:15 During this 20 second interval 5 different stations associated with FWP 13 or FW heaters initiated trips or alarms, for a total of 1 trip and 9 alarms. These did not include alarms mentioned earlier from the FWP 13 seal

water DP. All of these alarms/trips can be attributed to vibration.

18:12:15 to 18:12:45	In this approximate interval the first (of two) fire alarms sounded, set off by dust and asbestos insulation shaken off the nearby piping triggering smoke detectors. The operator who had been sent to the FWP 13 observed the pump "quivering" and continued to the #13 FCVs to see if their stems were cycling. He could not discern whether the stems were moving, as the valves themselves and their associated piping were moving too much for him to observe the stems. He called the control room on a "Hear-Here" to tell them to get FWP 13 off line - they were backing the reactor power down as fast as they could.
18:12:45 to 18:12:50	Two additional FW heater alarms tripped on Hi-Hi Level. These can also be attributed to vibration.
18:13:43 to 18:13:56	In this interval 5 new stations indicated alarms; there were vibrationally caused trips from 3 FW heaters.

There were also 7 DP alarms from the #12 clean-up demineralizer or strainer, all attributable to the changes in recirculating flow, not to vibration.

III. SEQUENCE OF EVENTS (Continued)

In this approximate interval the operator in the turbine building, having in the meantime returned to FWP 13 and observed more severe vibrations, again called the control room and told them to remove the FWP 13 from service. He then left the area to return to the control room, and heard the clutch between the turbine and the pump unload. Vibrations were felt in the control room for the last 5 seconds, some 200 feet away from pump.

18:13:56 Manual scram of the reactor with near simultaneous manual tripping of the clutch on FWP 13. Reactor power about 79%. Vibrations in the control room ceased.

18:13:58 to 18:15:12 Additional trips and alarms associated with FW piping occurred. A second fire alarm due to asbestos insulation and dust from piping vibration occurred.

As expected, the reactor water level dropped to 53 inches four seconds after the manual scram, causing the FWS to shift into the High Pressure Coolant Injection (HPCI) mode and initiating an automatic scram signal. The automatic reactor scram signal caused a sequential trip of the main turbine and the generator, as designed. The reactor water level dropped to approximately 19 inches before recovering and then overshot the normal control band. Both motor-driven FWPs tripped on high reactor water level of 95 inches at 1816. The operators then proceeded to place the unit in a stable shutdown condition without further incident.

IV. EFFECTS OF THE EVENT

Some effects of the event* were apparent during the course of the event, i.e., the damage to insulation on portions of the FWS piping. This damage caused the two fire alarms which were heard at the time. It was subsequently concluded that these alarms were set off by dust affecting the photoelectric smoke detectors. Damage to pipe supports was first recorded on December 20, during an early walkdown of the entire FWS piping. Flow control valve 13A (FCV 13A) was disassembled on December 20 and it was discovered that the valve plug was separated from the valve stem as the result of a fracture of the valve stem through the area where the stem was seal welded to the plug. When the insulation was removed for bearing inspection from the FWP 11 pump on December 21, four pin-hole leaks were noticed at a weld on the piping elbow at the pump suction. The #13 feedwater pump (FWP 13) was disassembled and on inspection of the impeller on December 21 it was discovered that a triangular piece about 1 3/4" x 1 7/32" x 1 7/8" had broken off one of the six inlet turning vanes on the impeller and was missing.

*The transient event is defined as follows: The abnormal and excessive vibration of the FWS piping which led to a manual scram at 18:13:56

IV. EFFECTS OF THE EVENT (Continued)

Inspections and Walkdowns

Following the early walkdown of the FWS piping on December 20, a number of extensive inspections, examinations, walkdowns and tests were performed to assess the effects of the transient on the feedwater piping and supports. These activities covered the following piping systems and associated supports:

System 51 - Reactor Feedwater Booster Pump Discharge to Feedwater Pump Inlet

System 29 - High Pressure Reactor Feedwater (From Reactor Feedwater Pumps to 5th Extraction F.W. Heater Stop Valve, including the low flow bypass line to the condenser)

System 30 - High Pressure Reactor Feedwater (From 5th F.W. Heater to External Isolation Valves)

System 31 - High Pressure Reactor Feedwater (From External Isolation Valve to Reactor Inlet Nozzle)

The following specific inspections, examinations, walkdowns and tests were performed:

1) An ISI, VT-3 (visual) inspection of System 51, 29, 30 and 31 piping supports. (See "Exam Status", Appendix A)

IV. EFFECTS OF THE EVENT (Continued)

NOTE: Some additional supports from other auxiliary systems were also inspected since they were in the general area of the feedwater piping supports, however, damage to these supports is not believed to be associated with the transient.

2) A special walkdown of selected piping supports of Systems 29, 30 and 51 in accordance with "Special Walkdown Procedure to Assess the Affects of the December 1987 Feedwater Transient at NMP-1," Revision 3 (Appendix A).

3) Surface examination (MT or PT) of selected welds on System 29 was performed in accordance with "Special Supplemental Examination Procedures to Assess the Effects of the December 1987 Feedwater Transient at NMP-1," Revision 2 (Appendix A).

4) Snubber testing of selected snubbers on System 29 was performed in accordance with "Special Snubber Inspection and Testing Procedure to Assess the Affects of the December 1987 Feedwater Transient at NMP-1," Revision 0 (Appendix A).

The criteria and scope of the special examinations, inspections and testing (items 2 through 4) are included in the body of the procedures in Appendix A..

IV. EFFECTS OF THE EVENT (Continued)

Inspection and Walkdown:

The results of the ISI, VT-3 inspection (Item #1) and the special walkdown (Item #2) are summarized in "Exam Status", Section of* Appendix A. Each of the supports inspected was classified in one of the following categories:

1) Accept As-Is - support condition is acceptable, with no observed damage.

2) Accept With Repair - support condition required minor repair action such as tightening of loose bolts, replacement of missing nuts, etc. These conditions may be attributed to normal operations and not to the FWS event.

3) Engineering Disposition Required - Indicates that NMPC Engineering was required to perform one of the following:

   a. Evaluate inspection reports where support condition was indeterminate by the inspector, i.e., there was no clear accept or reject criterion for the condition observed. These supports were classified as either "accept as is" or "accept with repair" if appropriate. Nonconformance Reports (NCRs) were prepared for supports that had rejectable condition.

   b. Disposition Nonconformance reports as either accept-as-is, repair or rework.

*Exam status is as of 2/12/88

IV. EFFECTS OF THE EVENT (Continued)

4) Reject - Supports that were not acceptable to inspection criteria. NCRs were issued for all these conditions. NCRs were then dispositioned "Use as Is", "Rework" or "Repair". Supports that required repair or rework as a result of an NCR were assumed to have been damaged during the 12/87 transient, although in some cases this damage may have occurred previously.

Table 1 provides a summary of the inspection and walkdown results. All necessary repair or rework to supports will be completed prior to startup following the present refueling outage.

TABLE 1

	TOTAL	PERCENT
Supports Inspected*	322	100
Accept as is	270	84
Accept with repair (No NCR)	34	10
Repair/Rework (NCR)	18	6

*Includes only those supports specifically on Feedwater System 29, 30, 31, 51

In addition to inspection for damage, the Special Walkdown procedure was intended to determine whether any permanent deformation of the piping had occurred. This was done by comparing new observations with previous readings for spring hanger settings/locations and pin-to-pin dimensions on snubbers. The conclusion drawn from this evaluation was that no permanent deformation of the feedwater piping occurred as a result of the feedwater transient event.

IV. EFFECTS OF THE EVENT (Continued)

Weld Examinations:

Surface examination (MT or PT) was performed on 22 welds on System 29 feedwater piping. The welds selected were those which were determined by analysis and judgment to have been subjected to the highest stresses during the feedwater transient. Of the 22 welds examined, 2 welds had rejectable indications. However, these indications were attributed to original imperfections that were acceptable to the original material specification and not to the effects of the 12/87 feedwater transient. The rejectable indications were all removed by grinding or flapping and the surfaces accepted for service.

Snubber Testing

Functional testing was performed on 5 snubbers on System 29 feedwater piping that calculations indicated had been subjected to large loads during the feedwater transient. These snubbers were selected on the basis of the piping stress analysis performed by Niagara Mohawk Power Corporation (NMPC) Engineering. Snubber 29-HS-11, which had been visibly bent during the transient, was also tested to determine whether it had functioned properly during the transient.

It was determined that all of the tested snubbers were functional and had performed as designed during the transient. All the snubbers tested, with the exception of 29-HS-11, were returned to service. Snubber 29-HS-11 was replaced with a new snubber.

IV. EFFECTS OF THE EVENT (Continued)

Component Examinations

In addition to performing the walkdowns and special inspections of the FWS piping and supports, several components in the FWS were disassembled and inspected to determine their status and ascertain whether they had sustained damaged or were acceptable for subsequent operation. The two motor driven feedwater pumps (FWP 11, FWP 12) and the turbine driven pump (FWP 13) as well as their associated flow control valves (FCV 11 and FCV 12 together with FCV 13A and FCV 13B) were treated this way, and the results are presented below*.

FWP 11: As mentioned earlier, on December 21 four pinhole leaks were discovered in the suction elbow of FWP 11. Subsequent detailed NonDestructive Examination (NDE) and metallographic examinations disclosed that the leakage occurred in the factory weld between the carbon steel elbow and the 5% chrome pump casting. A through-wall crack was discovered in the area of the pinholes (a boat sample was taken from the weld in this area and sent to Battelle-Columbus for metallographic examination), and two additional indications of possible flaws in this weld were also observed. In all three instances the flaws were such that a section of the weld had to be removed (through the entire pipe wall thickness) and the weld repaired. The final weld was subjected to NDE and found

*Information on the feedwater pumps is provided in Appendix B.

acceptable for service. This same elbow was examined as part of our erosion/corrosion program. All areas had sufficient minimum wall thickness; several areas, however, did not have the full corrosion allowance. Consequently, the wall thickness will be monitored at subsequent outages. There were no indications of erosion/corrosion on the inside of the elbow. Additional welds on the suction and discharge piping of the pump were examined, but no repairs were required.

FWP 12: The welds on FWP 12 corresponding to those examined on FWP 11 were also subjected to NDE and no weld repairs were required.

FWP 13: As mentioned above, inspection of FWP 13 revealed that a piece of an impeller inlet turning vane had been broken off and was missing. The normal preventive maintenance for FWP 13 calls for the internals of this pump (the volute and the impeller) to be inspected at the scheduled refueling outage every two years. Since new parts were on hand, awaiting the outage scheduled for March 1988, they were installed. Additional normal maintenance involving the buildup of worn surfaces on the volute seal was also performed at this time and the galled outboard bearing top half replaced.

FCV 13A: This flow control valve was disassembled and the valve plug/stem assembly was found to have failed; i.e., the stem was fractured through the weld between the stem and the plug

which seals the threaded connection between the 1 inch diameter shaft and the valve plug. In addition, there were marks on both the valve plug and on the valve seat cages indicating that the plug had been hammering against the webbing between the ports in the cages; and the plug in those areas had been peened or worn such that indentations several mils deep had been made in the plug circumference. The failed valve plug and stem were sent to Battelle-Columbus for metallographic analysis to help determine the cause and mechanism of the failure. Visual examination of the valve body was performed to determine if the event had damaged the body; no indications of damage was found. Since 1979 the valve internals (cages and plug/stem assembly) for the 13 FCVs have been replaced at every two year refueling outage. A new, modified plug/stem assembly of modified design (See Section VII) was installed and the valve reassembled for use.

FCV 13B: This valve was also disassembled and inspected. NDE was performed on the weld at the plug/stem joint and no indications of defects were found. The weld on the FCV 13B plug/stem joint had a significantly larger radius (9/16 in.) than that on the corresponding weld on FCV 13A. Again, there was evidence of hammering or wear between the plug and the adjacent cages, but not to as severe an extent as on FCV 13A.

IV. EFFECTS OF THE EVENT (Continued)

The plug/stem assembly on this valve was also replaced with the new design, and the valve body was visually examined and no sign of damage was observed.

FCV 11
and
FCV 12

These valves are smaller than the two FCV 13 valves, see less severe service, and have never experienced any of the stem/plug problems that the 13 valves have. However, these valves stems were inspected for incipient damage. An NDE examination (PT and UT) was carried out on both plug/stem joints and no indications of flaws were found. The valves were reassembled with the old internals and declared ready for service. As a result of the 1988 refueling outage being moved forward and occurring before startup, the internals of these two flow control valves will be inspected during the refueling outage. If they are judged to be in suitable condition for the next two year cycle they will be reinstalled; otherwise the internals will be replaced with new internals.

V. ANALYSES

Following the feedwater transient event, several analyses were initiated to determine the effects and cause of the event, and to ensure that the station would be in a safe condition when operation resumed. These analyses involved the use of computers for calculations of stresses and hydraulic phenomena, reviews of past operating history for related

V. ANALYSES (Continued)

events, non-destructive examinations of Feedwater System piping elements, and metallurgical examinations of the components which were found to have failed. These analyses are discussed in this section with additional details included in appendices.

A. NMPC Engineering Piping Analyses

Static and dynamic analyses of the System 29 piping were performed by the NMPC Nuclear Engineering Department using SUPERPIPE, an industry recognized computer program. This part of the Feedwater System was selected for analysis based upon the obvious physical damage observed on the initial walkdown and the operator's observation of significant vibration in this area. Systems 30, 31 and 51 (other parts of the FWS) were not analyzed, as system 29 was judged to have experienced the most severe effects. Therefore, if system 29 were found acceptable for continued safe operation, the rest of the FWS would be deemed acceptable.

First, a static analysis was performed applying an arbitrary 1 inch southerly deflection at snubber support 29-HS-11 (the buckled snubber). The 1 inch deflection was estimated to be the largest deflection which could have taken place at this point based on physical evidence observed on a walkdown. The resulting pipe stresses, when combined with dead weight and thermal stresses, were below ASME Code allowables. Had a 1 inch deflection actually occurred at snubber 29-HS-11, pipe support 29-HS-6 would have

exhibited physical damage. The support and its snubber were subsequently checked and found acceptable, so the assumed 1 inch deflection was greater than actually occurred.

Results from these static analyses were used to determine which piping components and supports had been subjected to the most severe stresses during the transient; those components and supports were then selected for special walkdowns and weld inspections.

A reduced piping model was used for dynamic analyses. Natural frequencies and mode shapes were calculated, with specific attention given to those modes which could occur in the vicinity of the flow control valves and would result in large amplitudes of motion. Sinusoidal forcing functions with a frequency corresponding to the first mode in the vertical direction were placed at appropriate elbows and tees near the control valve Directions and amplitudes of the motion were applied in agreement with the hydraulic transient scenario derived by MPR Associates under a separate contract. The result of both the static and dynamic analyses show that this part of the Feedwater System (system 29) was not overstressed due to this transient and is safe for continued operation.

The dynamic analysis disclosed that piping reducers adjacent to the 13A FCV were the highest stress point. A fatigue analysis was conducted on these reducers. The conservative assumption was made that the number of cycles of maximum stress was 3600 (900 from this event, 900 each from

two prior events, and 900 due to thermal cycling in startups and shutdowns). The maximum fatigue usage factor was 0.026, providing a substantial margin of safety.

Details of the NMP1 analysis are presented in Appendix C.

B. MPR Associates Analysis

Several hydraulic analyses relating to the feedwater transient performed by MPR Associates are summarized in Appendix D. These analyses covered the following:

- Hydraulically induced forces on the FCV plug and the effect of these forces, as influenced by their resulting increased clearances between the plug and the valve cages, on the stresses in the valve stem which ultimately produced a fatigue fracture in the stem on FCV 13A.

- Hydraulic forces on the resulting free plug causing it to oscillate, closing and opening the valve, such that the piping system was tuned to its natural frequency.

- Pressure pulses in the piping system caused by the closing and opening of the valve.

V. ANALYSES (Continued)

- The response to the piping system, particularly the reducers adjacent to FCV 13A, and the integrity of the piping taking into account fatigue considerations.

- The improvement in the valve stem performance resulting from the modified design adopted for the stem/plug connection for the 13 FCVs.

These analyses produced the following results:

- Flow through the 13 FCVs produce oscillating hydraulic forces (with a frequency of about 25 hz) in the horizontal plane which drive the plug into the webbing between the valve parts in the cages and produce reverse bending stresses in the stem. The hammering of the plug against the cage wears the contacting surfaces of the plug; the radial clearance between the plug and cage, which is about 6 mils when the internals are new, increases as a result. As the clearance increases, the amplitude of the oscillation of the plug increases, with a resultant increase of the reverse bending stresses in the stem. These stresses, as affected by stress concentration factors at the stem/plug interface, are sufficient to cause a fatigue failure in the stem.

- The free plug is subjected to fluid forces which tend to close it when open and open it when closed. Opposite forces imposed on the valve body cause it to move; the piping in the vicinity of the valves moves vertically, and the system becomes tuned to the natural frequency of the piping. The resulting resonance can cause the system to move and damage the piping supports.

- Impulse forces created by the sudden closure of the valve are much higher than the forces mentioned above, but are of short duration and would not excite the piping as much as a harmonic load at the piping natural frequency. Such a force could, however, have caused the final fracture of the previously damaged impeller vane.

- Conservatism exists in the NMPC calculations regarding the stress and fatigue analysis of the reducers near the FCVs.

- The new modified stem/plug connection for the 13 FCVs features lower stress concentration factors and should be acceptable for the normal operating (24 month refueling) cycle.

C. <u>Analysis of Previous Events</u>

A report, "Availability Analysis of the Nine Mile Point Nuclear Station Unit 1 Feedwater System", had been prepared by ARINC

Research Corporation in May 1986, and this report was helpful in providing a data base for problems with the Feedwater System. Two conclusions drawn from a review of the report are:

- From 1978 through 1985 (the last year covered by the study), there was a decreasing trend in megawatt hours lost due to problems in the Feedwater System (with the exception of 1985 when high lake temperatures and condenser tube leaks had significant effects, the condenser was retubed during the 1986 refueling outage);

- Since 1978, when both 13A and 13B flow control valves failed, the lost MWh due to 13FCVs has been negligible. (The design of the 13 FCV internals was modified in 1978, and the modification was implemented during the 1979 refueling outage.)

1. <u>December 7, 1987 Event</u>

Less than two weeks before this feedwater transient event (on December 7, 1987), NMP1 suffered an automatic scram due to low reactor water level as a consequence of a problem with the feedwater flow control valves for the FWP 13. An excerpt from the Scram Report, prepared in conformance with Procedure No. N1-RAP-6, "Post Reactor Scram Analysis and Evaluation", follows:

"At approximately 9 p.m. on December 6, reactor water level

oscillations were observed. By 11 p.m., the oscillations had increased in magnitude to nearly 5 inches. At this time I&C was notified. Prior to the scram, Operations attempted to place a manual blocking collar on #13 Feedwater Flow Control Valve (North) to dampen the level oscillations. As the blocking collar was being lowered onto the north FCV, reactor water level started to drop. Analysis of this level drop about 10 minutes prior to the scram showed that the manual blocking collar did limit feedwater flow. The chart recorder showed a slight drop in feedwater flow. The computer edits quantify this drop in flow. Analysis of the flow rates confirm the approximate 7 inch level drop. The collar was then removed and the low level drove feed flow up. Water level increased to approximately 82 inches. At that time, the blocking collar was put back on such that it further limited the oscillations of the #13 North FCV. This resulted in an even further reduction in feedwater flow and corresponding drop in reactor water level. This level drop was again confirmed by the Operations Department review. The reactor scrammed when level reached 53 inches at 00:54:49. Post scram inspection of #13 FCV has shown that probable dirt in the air line is responsible for the erratic behavior of the system. This problem was aggravated by the gain being out of adjustment and causing sluggish valve response. Flow Control Valve 13 (south) was observed stuck during the transient until the scram. With #13 FCV (south) stuck and #13 FCV (north) blocked,

there was no means for an automatic increase in flow to compensate for a water level decrease."

Because the 13 FCVs were involved in two events within two weeks, there was an early effort to determine if the two events were related, and, more importantly, if there were a cause and effect relationship. The circumstances were sufficiently different, however, that it was concluded that there was no significant connection between the two events.

There were, however, two other instances in which problems quite similar to the current one occurred with the 13 FCVs and an analysis of these percursors, one of which occurred in December 1975 and the other in January 1978, was valuable in providing an understanding of the phenomena involved and a determination of the root cause for this event.

2. <u>December 1975 Event</u>

Very little information is available concerning the December 1975 event. The ARINC Report (mentioned above), in referring to the event, comments only, "Replaced internals of the #13 FW control valve." A review of the operating log for the period from November 29 to December 22, 1975 mentions several times that the 13 FCV (south) was jumping. On November 29, with the reactor startup in progress, it was noted that "FW system flows very, very

unstable." Reactor shutdown commenced at 1400 that day. The next log entry regarding the 13 FCVs was on December 11, 1975, with the reactor on line at 207 MWe. As the power was increased 20 MWe, the 13 FCV (south) began jumping, so power was reduced to 200 MWe. FWP 11 was turned on and #13 feedwater lines settled down at a flow rate of 2 million pounds/hour, and the load was increased to 263 MWe. Subsequently, the air supply to 13 FCV's was adjusted, the flow was smooth, the load was increased to 313 MWe, and FWP 11 was turned off. The next log entry concerning the FCVs was on December 18, when it was noted that the 13 FCVs needed to be worked on - "cycling is causing harmful vibrations." On both December 20 and 22 there were log entries to the effect that the 13 FCV (south) was "jumping excessively." An "Apparatus Needing Attention" (ANA) form dated 12/20/75 was prepared for the #13 FCV (south) stating that it "Appears to be jumping excessively"; the ANA form was stamped on 12/22/75 to indicate a QC review (such a review occurs before the work is performed), but no paperwork has been found to indicate the cause of the problem. One of the control room operators on duty during this period has recently stated that the valve plug had unscrewed from the valve stem, causing the problem.

3. <u>January 1978 Event</u>

A series of events occurred in the period January 20-25, 1978 involving vibration in the feedwater piping centered on the 13 FCVs.

V. ANALYSES (Continued)

On January 20, 1978, with the unit at nominal full power, a log entry at 1015 recorded "#13 FW pump lines jumping." A 1035 entry stated "Reducing load; appears #13 FCV (south) is out of control." At 1058 the operators manually scrammed the reactor.

Subsequently, the FCV 13A (the south FCV)* was disassembled and it was found that the valve plug had become unscrewed from the stem. The Quality Control Inspection Report (QCIR) for this valve (No. 78-011) stated that, "The set pin which locks the threaded valve stem to the plug was found to be sheared. The stem had worked out of the plug and the threads were badly stripped. One side was wiped out completely for approximately 120°."

The valve was reassembled and placed in service, and at 2125 on 21 January a log entry stated that the reactor was critical and heating up. Subsequently (22 January) a steam leak was discovered on the steam seal regulator blocking valve, the reactor was brought to hot standby to repair the valve. At 1030 the repairs were completed and rod withdrawals started. The mode switch was placed in run at 1338 and the generator synchronized to the system at 1510. Power was

* Reviewing the records of this event was complicated by the fact that FCV 13A was referred to incorrectly as the north valve, and FCV 13B was referred to incorrectly as the south valve. The nomenclature and the sequence of events used in this report is correct, and should supersede earlier, different accounts.

increased to approximately 200 MWe, and at 1813 on January 22 the FWP 13 was placed in service. At 1823, high vibration was experienced in the Feedwater System, and at 1830 the FWP 13 was removed from service. Investigation showed a sheared pin on the control cylinder snubber of FCV 13A (south); repairs were completed and FWP 13 was placed in service at 0620 on January 23. A log entry at 0625 stated, "#FWP 13 in service - reasonably steady at 2 million [pounds/hour] - at 2.25 million feedwater lines started vibrating." The FWP 13 was removed from service at 0659. Load was maintained at 240 MWe while maintenance inspected the north flow control valve (FCV 13B).

FCV 13B had suffered a fractured stem and the plug was no longer attached to the stem. A new stem was machined, attached to the plug, and the valve reassembled. A log entry at 0620 on January 25 stated that, "Shaft pump [FWP 13] in service - looks good." The load on the reactor was increased during the day, and the operation of the 13 FCVs was not a problem.

Two of the feedwater transients involving severe vibration of the 13 FCVs were accompanied by a manual scram from full power, those of January 20, 1978 and December 19, 1987. The other events involving vibration of the 13 FCVs (those of December 1975 and January 22-23, 1978) occurred during reactor startup when power was being increased and the FWP 13 was being placed in service. These events encompassed four 13 FCV failures; two of the failures were characterized by the valve plug becoming unscrewed from the valve stem

V. ANALYSES (Continued)

(December 1975 and January 20, 1978), while in the other two (January 22, 1978 and December 19, 1987) the valve stem fractured and the plug separated.

Regardless of the type of 13 FCV failure or of the power level at the time of failure, the effect of the failure was to increase the vibration of the Feedwater System, and this vibration was picked up by various sensors. Figures 1-3 present data for the various alarms that were recorded for the 1978 and 1987 events (no similar data is available for the 1975 event). Figure 1 shows the 20 alarms and 8 trips from 14 sensors in the Feedwater System that have been attributed to vibrations induced by the fractured stem of FCV 13A on December 19, 1987, as well as two fire alarms set off by dust from insulation vibrated loose from its piping. These alarms occurred within about a 3 1/2 minute interval (as described in Section III). Figure 2 shows the seven alarms from 3 sensors from vibrations in the five minute period preceding the manual scram from full power on January 20, 1978 when the plug from FCV 13A unscrewed from its stem.

In both these events the vibration was sufficiently severe that power could not be decreased quickly enough to prevent a manual scram because of vibrations. The extent of the vibrations was more widespread in the latest event, and the damage to the Feedwater System piping supports was much more severe. It is believed that a stem fracture produces a more severe effect than an unscrewed plug because for the latter the amplitude of oscillation of the plug is less because the effective length of the stem is increased by the length of the thread. The two

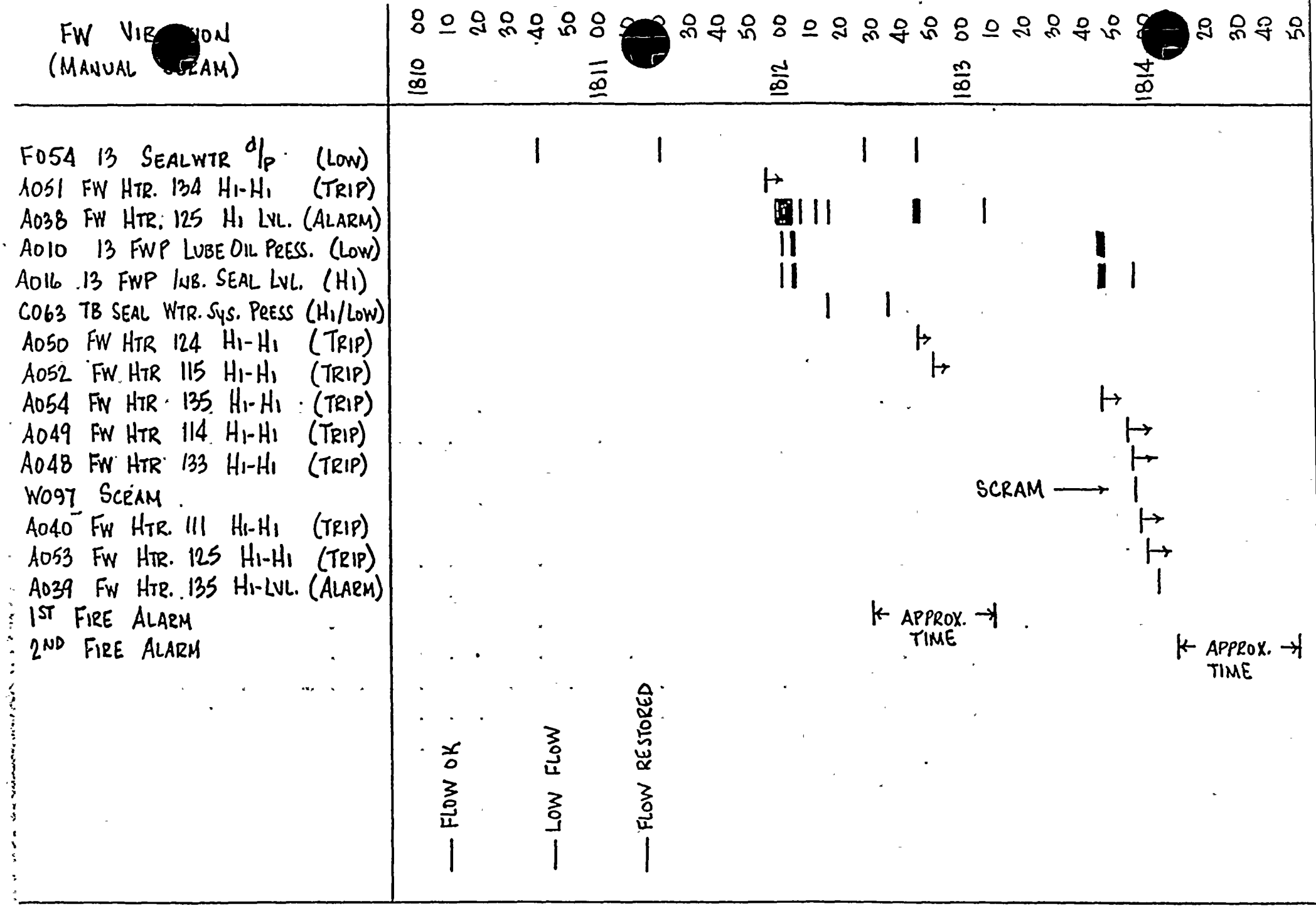

FIGURE #1
DECEMBER 19, 1987 FEEDWATER VIBRATION

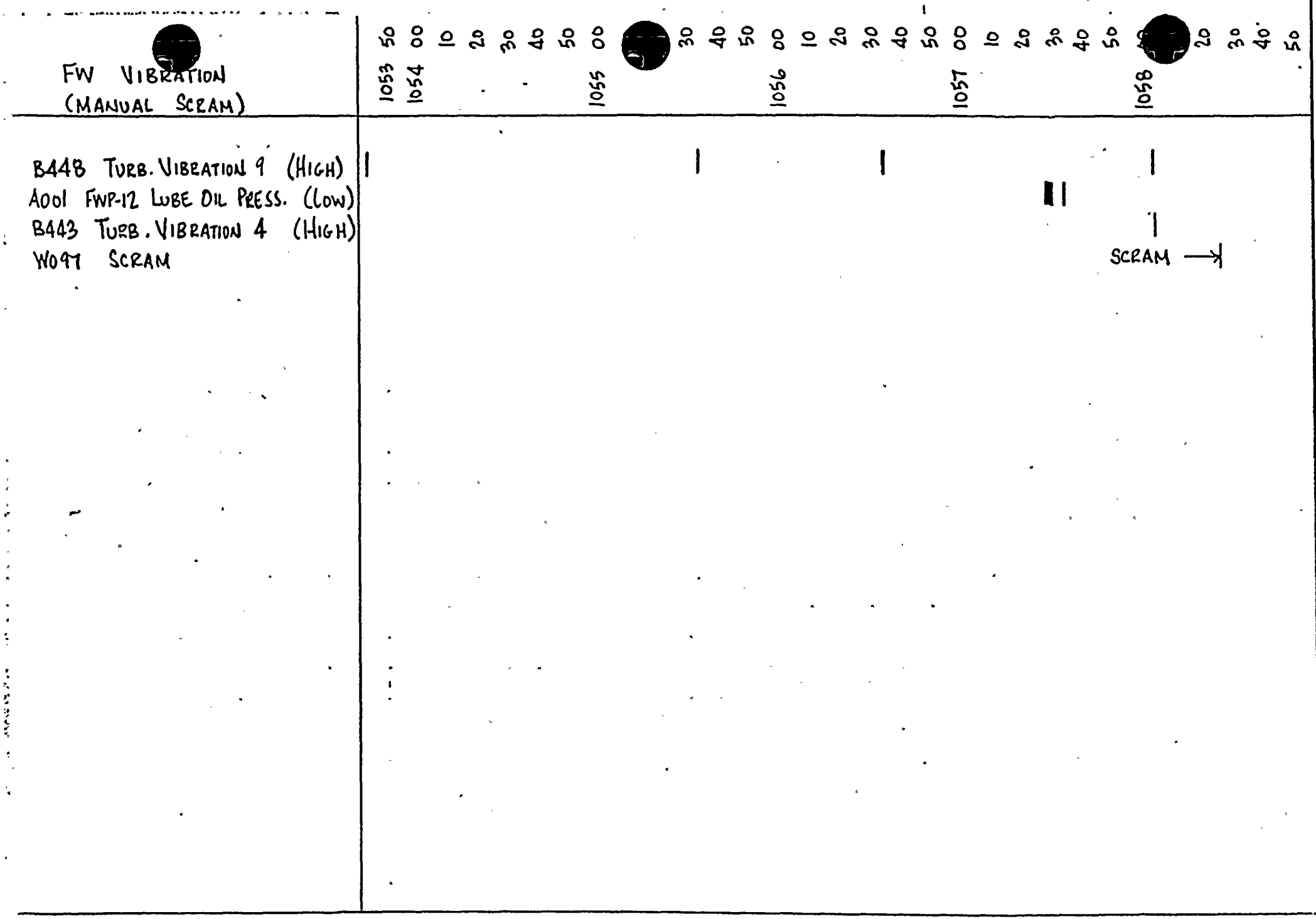

FIGURE #2

JANUARY 20, 1978 FEEDWATER VIBRATION

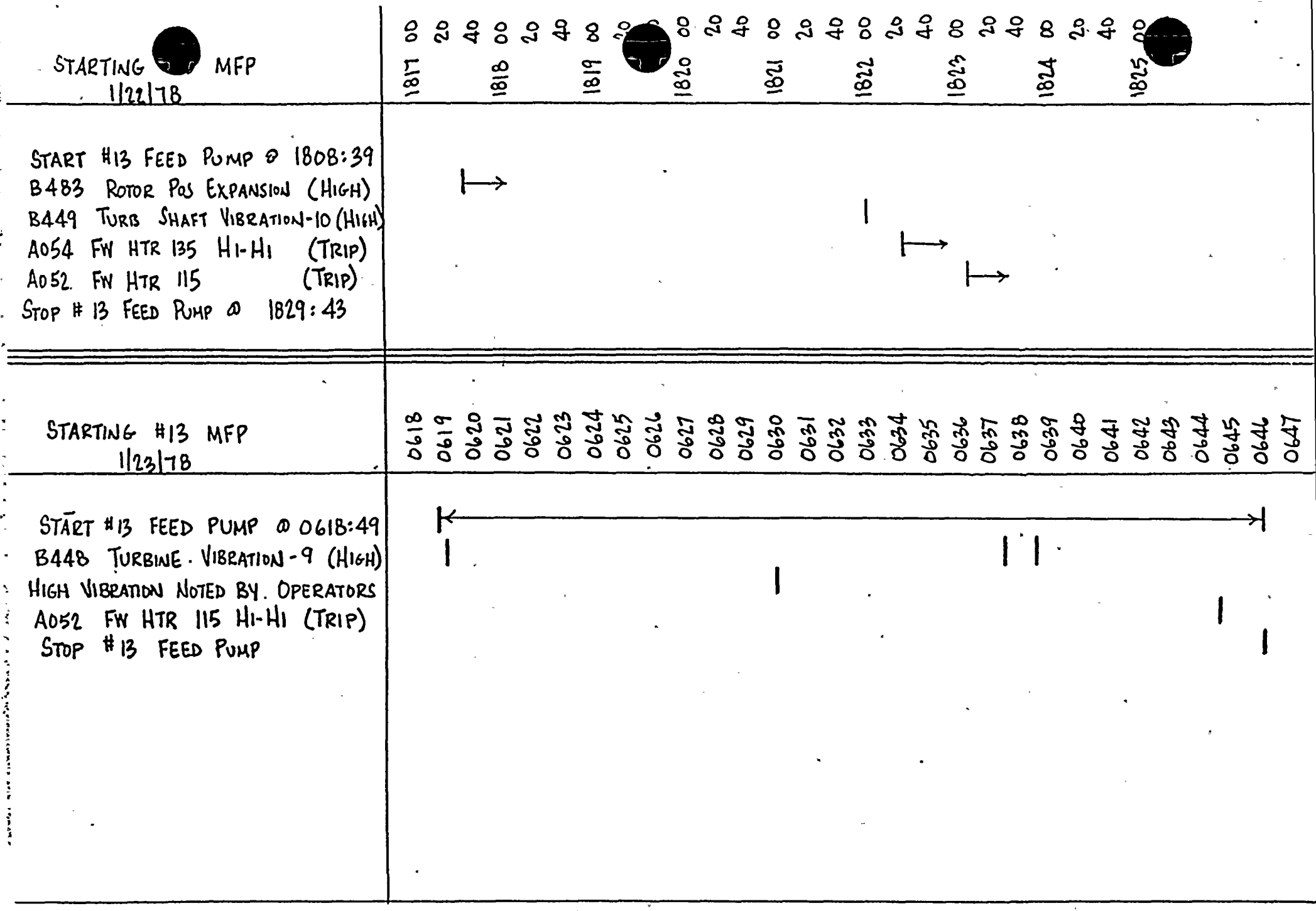

FIGURE #3

JANUARY 22 & 23, 1978 FEEDWATER VIBRATION

V. ANALYSES (Continued)

13 FCVs are controlled by a single signal to seek the same stem position. With FCV 13A plug unscrewed the control signal calls for a wider open position for both valves, but the actual plug position is such that FCV 13B is open wider, thus passing significantly more flow than FCV 13A. With a fractured stem, on the other hand, both plugs (in the open position) are open to the same extent. It is reasonable, therefore, that the effect of a stem fracture is greater than that for an unscrewed plug.

This reasoning is reinforced by examination of Figure 3, which presents the alarms generated on January 22 and 23, 1978 when the reactor was being brought up to power following the scram of January 20. The fault was with FCV 13B in this case, and the problem was subsequently discovered to be a fractured stem. As long as the reactor was operating at a power level sufficiently low that the two motor driven pumps could provide feedwater, there was no problem. When FWP 13 was put in service, and the total feedwater flow increased above about 2 million pounds per hour, the Feedwater System experienced severe vibration problems. In both of these events there were trips of fifth stage feedwater heaters, as there were in the December 1987 event, indicating severe vibration of the piping downstream of the 13 FCVs. Although there was vibration, there was no recorded damage to the piping supports because the flow rate was low and resonance of the system was prevented.

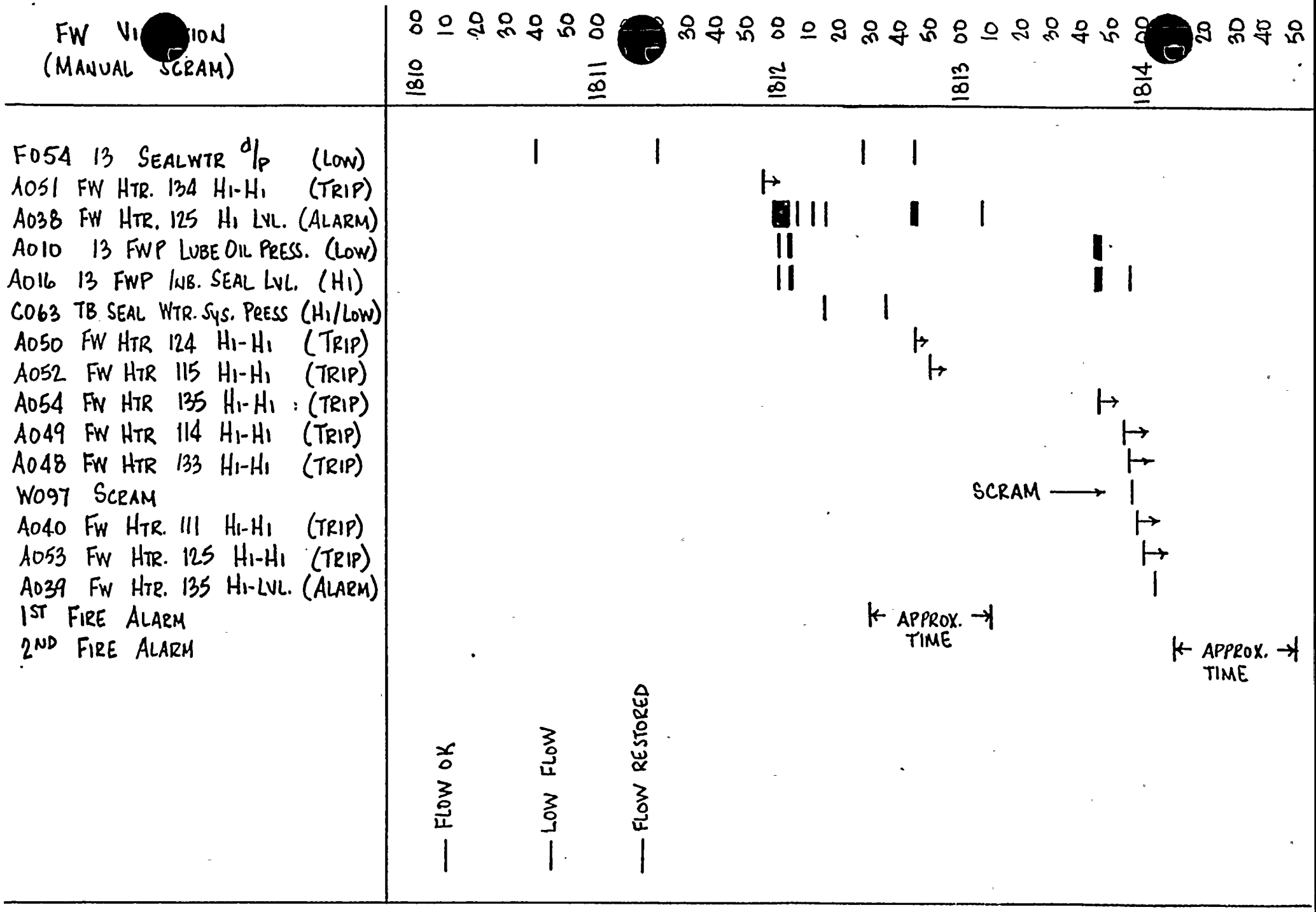

FIGURE # 1
DECEMBER 19, 1987 FEEDWATER VIBRATION
AND MANUAL SCRAM

V. ANALYSES (Continued)

The December 1975 event tends to support the above analysis, even though specific data is not available regarding alarms (perhaps because there were none). In this instance, also, the reactor was being brought up to power following a refueling outage. As the power level was increased and FWP 13 flow required, vibration of the FCV 13 (south) was noted. Unlike the January 1978 cases, however, the vibration was not severe enough to require immediate attention; the problem persisted for about three weeks before it was remedied. The problem was discovered to be an unscrewed plug; thus, the lesser effects.

As a result of the January 1978 problems with the 13 FCVs, design changes were made in their internals - both for the cages and the stem/plug assembly. The change in the cages involved increasing the flow area of the ports in the lower cage to help reduce axial stem force reactions resulting from fluctuating system pressures. The changes in the plug/stem assembly called for the valve plugs to be welded, rather than pinned, to the stem. This modification is discussed further in Section VII.

D. <u>Metallurgical Analyses</u>

Failure of three metal components were observed following the event: the stem of FCV 13A was fractured at the stem/plug interface; there were pin-hole leaks in a weld of the elbow at the suction of the 11 FWP; and a piece of the impeller of 13 FWP had broken off and was missing. Metallurgical investigation of the

first two of these components were carried out at Battelle-Columbus (see Appendix F for the detailed report on these), while the metallurgical investigation of the third was performed by an NMPC metallurgist (see Appendix F).

The stem and the plug from FCV 13A were sent to Battelle for analysis. The results of the investigation of the fracture at the fillet weld between the FCV 13A stem and plug indicated that it was a reverse-bending fatigue fracture. A primary and a secondary fatigue crack initiated from opposite sides of the stem, respectively. The regions of the crack origins appeared to be subsurface near the root of the weld, but no specific initiation sites could be identified. The nature of a crack initiation at that location would most likely be that of a weld flaw, such as a hot crack or a weld-metal pore. Flaws of that nature are frequently stress-raisers about which the magnitude of the resultant stress concentration can exceed the fatigue strength of the metal. Hence, a fatigue crack initiates in the adjacent metal and propagates.

The bending stresses were believed to have developed in service as a result of wear on the lower plug. Indications of wear on the plug at the six locations on the periphery where it contacted the cage ranged from 1 to 24 mils in depth. As the depth of wear increased, the bending stresses intensified.

V. ANALYSES (Continued)

A boat sample was cut from the weld between the elbow and the pump casting (the location of the pin-hole leaks) of the 11 FWP and sent to Battelle for analysis. The crack contained in the boat sample was investigated to determine the most probable cause of the failure. The results of the investigation indicated that the crack must likely was caused by intergranular stress - corrosion cracking (IGSCC). The weld metal was found to be sensitized and, thereby, was susceptible to IGSCC. The stresses which assisted intergranular corrosion were believed to be a combination of residual welding stresses and applied service stresses. (The weld was a factory weld, made by the pump vendor, and signs of initial weld repair were evident).

The damaged impeller of the 13 FWP was examined to determine the cause of the fracture in one inlet turning vane which resulted in a triangular shaped piece, about 1 3/4" x 1 7/32" x 1 7/8" being removed from the vane. The broken piece could not be found, so the examination covered only the impeller. Examination disclosed that just prior to the ultimate fracture only two small supports had held the piece to the impeller inlet turning vane at its leading edge. Most of the two sides of the triangle which had been attached to the vane had been separated from the vane by a crack during service; the crack region of the impeller surface exhibited cavitation marks and the thickness of the vane appeared to have been reduced by cavitation. The cracked edge of the vane between the last supports showed signs of rubbing, as in fatigue. It was

V. ANALYSES (Continued)

concluded that the small supporting piece near the hub had been caused to fail by an event which overloaded it (perhaps the impulse from the FCV 13A closing when its stem failed). The triangular piece then was swung by the force of the water about the other support, as in a hinge, and the other support broke. It was concluded that a casting defect in the affected inlet turning vane was the primary cause of failure; the defect in the vane was activated by the removal of surface material by cavitation erosion. A crack resulted, and a pressure pulse caused the final failure.

VI. ROOT CAUSE

Shortly after the event, as walkdowns, inspections and component disassembly were performed, there were four significant observations that needed explanation. These were:

1) damage to some of the piping supports of the Feedwater System;

2) the plug on FCV 13A was separated from the stem - the stem was fractured;

3) pin-hole leaks in the piping elbow at the FWP 11; and

4) a triangular piece was missing from one of the six inlet turning vanes on the impeller of FWP 13

V. ANALYSES (Continued)

As a result of the metallographic analyses carried out since the event and reported in Section V it has been determined that the pin-hole leaks in the FWP 11 suction line were not related to the event, but were simply discovered as a result of it. The leaks have subsequently been repaired, and the suction line wall thickness will be monitored in the future.

A root cause for the event has been determined. The proximate cause of the widespread damage to the Feedwater System piping supports was the vibration induced in the piping system by the fatigue fracture of the valve stem of the FCV 13A at the section where the stem is seal welded to the valve plug. Hydraulic analysis (Appendix D) shows that when this fracture occurred the plug was suddenly driven closed. A pressure difference was set up across the valve which propagated through the piping system, with a compression wave upstream of the valve and a decompression wave downstream of the valve. A direct force was applied to the valve as a result of this pressure difference, and forces were also applied at each elbow in the piping system as the pressure wave reached those elbows. Flow and pressure conditions in the valve are such that the separated plug is caused to open when it is closed and to close when it is open. For any force applied to the plug by the fluid, an equal but opposite force is applied to the valve body. Since the piping system is not highly restrained vertically near the feedwater control valves, the reaction force on the valve will add to the vertical motion of the pipe near the valve and accentuate the effect of the pressure pulsations in moving the pipe, thus affecting the relative

position of the plug in the valve. The most likely effect is that the plug motion tunes itself to the natural frequency of the pipe and that fluid forces caused by the relative motion of the plug and the valve will act to reinforce that motion. The upstream compression wave caused by the closure of the FCV 13A is postulated to have caused the piece of the impeller inlet turning vane to break off, given that a significant fracture already existed in the impeller and that the missing piece was attached only at its leading edge (see Appendix F).

So, given that a fracture in the FCV 13A valve system would cause the piping vibration and the FWP 13 impeller inlet turning vane to break, what is the root cause of the event; i.e., the cause of the fractured stem?

The hydraulic analysis of the 13 FCV by MPR Associates (Appendix D) determined that the plug at the end of the valve stem is subject to flow induced vibrations (in the horizontal plane) with a natural frequency of about 25 hz. This vibration causes the plug to oscillate and beat against the webbing, between the ports of the valve cage. The initial diametral clearance when the valve is assembled at the beginning of each two year fuel cycle is about 10 mils; long term vibration of the plug inside the cage causes both the plug and cage to wear. As the diametral clearance increases to about 40 mils the calculated bending stresses, taking into account stress concentration effects, are of sufficient magnitude to cause the stem to fail from fatigue at the point where the stem connects to the plug.

VI. ROOT CAUSE (Continued)

The metallographic analysis of the fractured stem carried out at Battelle-Columbus (See Appendix E) supports this scenario.

Following the January 1978 events, the internals of the 13 FCVs were redesigned, and the decision was made to inspect and replace as necessary the internals at the refueling outage scheduled for every two years. This is the first time since the design change was implemented in 1979 that there has been any problem with these valves. There are two conditions that may have been a factor in this particular failure:

- The fillet weld at the junction between the stem and the plug on FCV 13A was considerably smaller (3/8") than that on FCV 13B (9/16"). The stress concentration factor was thus higher on the stem that failed. (The drawing obtained from Fisher Valve, the vendor, did not give a dimension for this weld).

- During the latest operating cycle NMP1 operated for many days at reduced (approximately 90%) power. For about 2000 hours FWP 13 was operated at less than 5,000,000 pounds/hour and for about 165 hours hours, at less than 4,000,000. Operation at reduced flow requires an increased pressure drop across the flow control valves, but also results in lower fluid velocities. The interaction between these factors, as well as the longer stem length, is complex and difficult to analyze. Operation below 5,000,000 pounds/hour also occurs for extended times (about 60 days) during end of cycle coastdowns.

VI. ROOT CAUSE (Continued)

The root cause of the event, then, is that flow induced vibration of the plug in the flow control valve induced a fatigue fracture in the valve stem allowing the plug to oscillate open-close and establish damaging vibrations in the feedwater piping. The increased stress concentration at the small-radius fillet weld is believed to be a contributing factor.

VII. RESOLUTION OF CONCERNS

Immediately following the event the decision was made that there would be no attempt to restart Nine Mile Point Unit 1 (NMP1) until the Niagara Mohawk management was completely satisfied that the plant was in a safe condition and that recurrence of a similar event was improbable. In particular, several immediate concerns had to be addressed and alleviated; these immediate concerns were:

1) What was the root cause of the event; can a similar event be prevented in the future?

2) Was the integrity of the Feedwater System piping and support system impaired?

3) Are all components in good working order?

4) Are there any problems with the plant as a result of the event?

VII. RESOLUTION OF CONCERNS (Continued)

In addition to the above, there are also concerns of a longer term nature, having to do with potential modifications to the plant. Such modifications could not be implemented immediately, but, given time for sufficient analysis and preparation, might be worth pursuing in refueling outages following subsequent operating cycles.

A) Immediate Concerns

1) As discussed in Section VI, the root cause of the event has been determined to be the fatigue fracture of FCV 13A valve stem, brought about by hydraulic forces acting on the valve plug.

A modification to the 13 FCV valve stem/plug assembly has been made which is expected to make a similar event in the future improbable.

Following the January 1978 event in which the FCV 13A plug unscrewed from the stem and the FCV 13B stem fractured, the vendor proposed a modification to the then existing stem/plug design. That design, shown in Figure 4, featured a 1 inch diameter shaft, screwed into the plug, and pinned with a 1/4 inch diameter pin; twice the plug became unscrewed and once the shaft broke in service. The modification as shown in Figure 5, employed a seal weld where the 1 inch diameter stem screwed into the plug. A letter from the vendor stated, "Also, the valve plugs will be welded to the stems to strengthen the

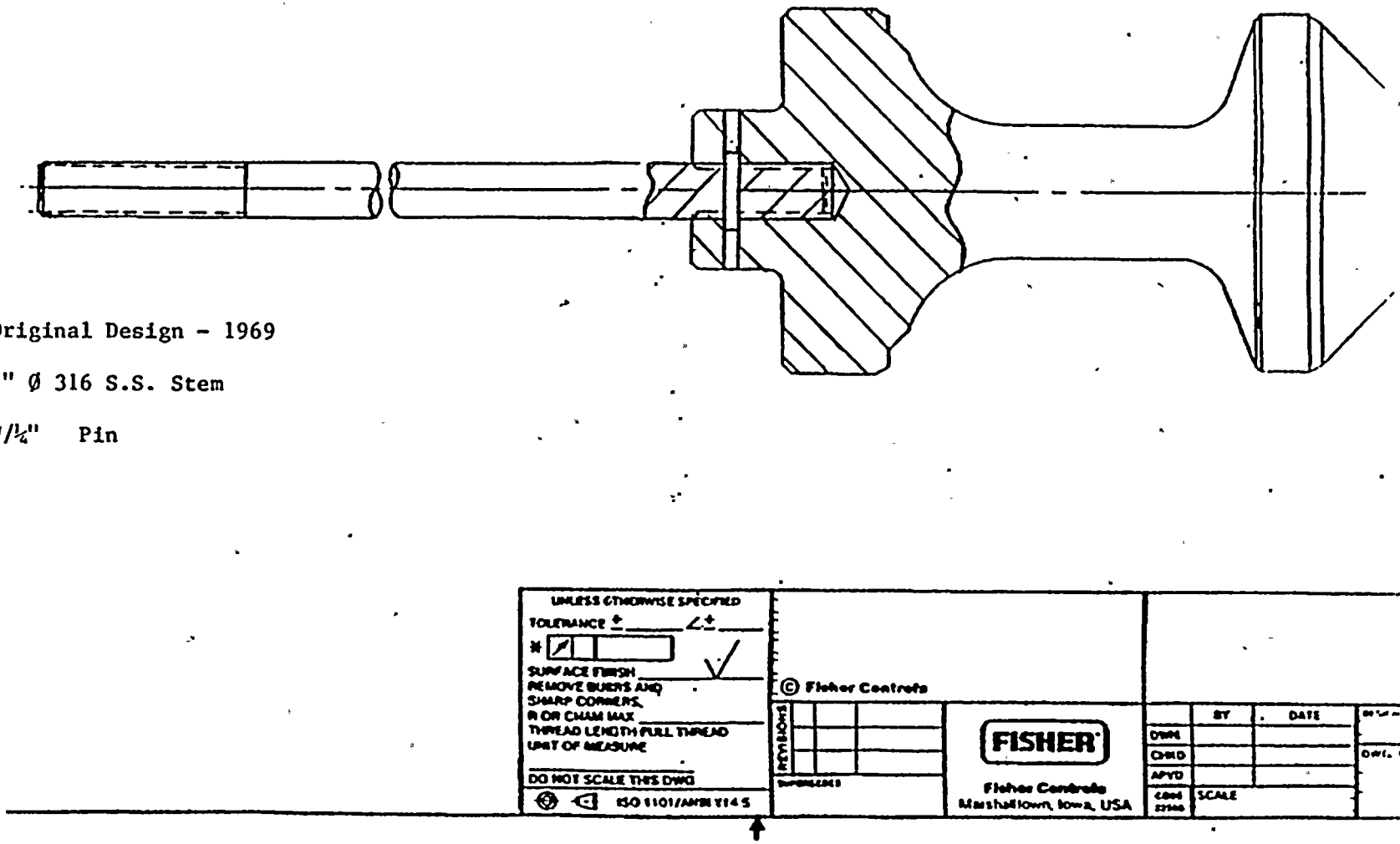
Original Design - 1969
1" Ø 316 S.S. Stem
W/¼" Pin
UNLESS OTHERWISE SPECIFIED
TOLERANCE ± ∠±
SURFACE FINISH
REMOVE BURRS AND SHARP CORNERS
R OR CHAM MAX
THREAD LENGTH FULL THREAD
UNIT OF MEASURE
DO NOT SCALE THIS DWG
ISO 1101/ANSI Y14.5
© Fisher Controls
FISHER
Fisher Controls
Marshalltown, Iowa, USA
BY
DATE
DWN
CHKD
APVD
SCALE

FIGURE 4

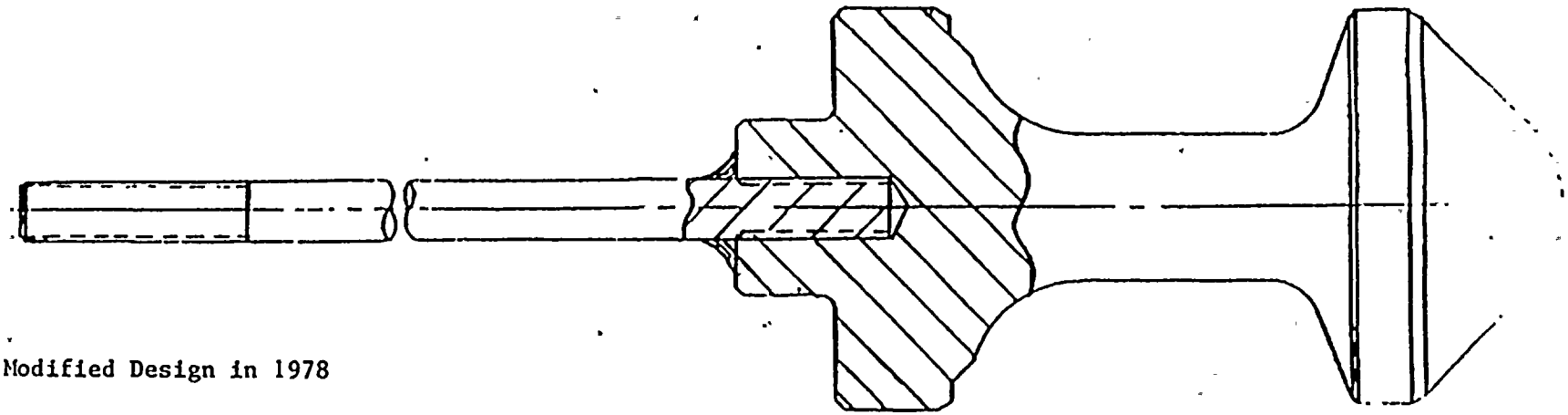

Modified Design in 1978

1" Ø 316 S.S. Stem

9/16" Radius Weld - Machine

Smooth After Welding

UNLESS OTHERWISE SPECIFIED
TOLERANCE ± ∠ ±
SURFACE FINISH
REMOVE BURRS AND SHARP CORNERS,
R OR CHAM MAX
THREAD LENGTH FULL THREAD
UNIT OF MEASURE
DO NOT SCALE THIS DWG
ISO 1101/ANSI Y14.5

© Fisher Controls

REVISIONS

FISHER
Fisher Controls
Marshalltown, Iowa, USA

	BY	DATE
DWN		
CHKD		
APVD		
SCALE		

FIGURE 5

plug/stem connection and eliminate the possibility of failure at this point." The modification has, in fact, prevented a failure since 1979 when it was implemented; the practice of inspecting and replacing as necessary the valve internals on a 2 year refueling outage interval has contributed to this record. (It should be noted that although Figure 5 calls for a 9/16 radius weld, the weld on the failed stem was only about 3/8 inch).

Following the event, a new modification has been effected in the plug/stem assembly; this modification is shown in Figure 6. The 1 inch diameter shaft increases at the end (at a 30° angle) to a 2 inch diameter threaded length which screws into the plug and is pinned with a 3/8 inch diameter pin. This design decreases the probability (compared to the original design) of the plug unscrewing from the stem because of the 2 inch vs. 1 inch threaded diameter and the 3/8 vs. 1/4 inch pin diameter. In addition, because of the increased thread length on the stem (3 1/2 inch) and the 3 inch valve travel, the plug cannot completely unscrew from the stem even if the 3/8 inch pin should shear.

The smooth transition from the 1 inch to the 2 inch diameter on the shaft decreases the stress concentration factor, and as stated in Appendix D, "the redesign is better than the original and should be acceptable for short term [i.e., a two year refueling cycle] operation."

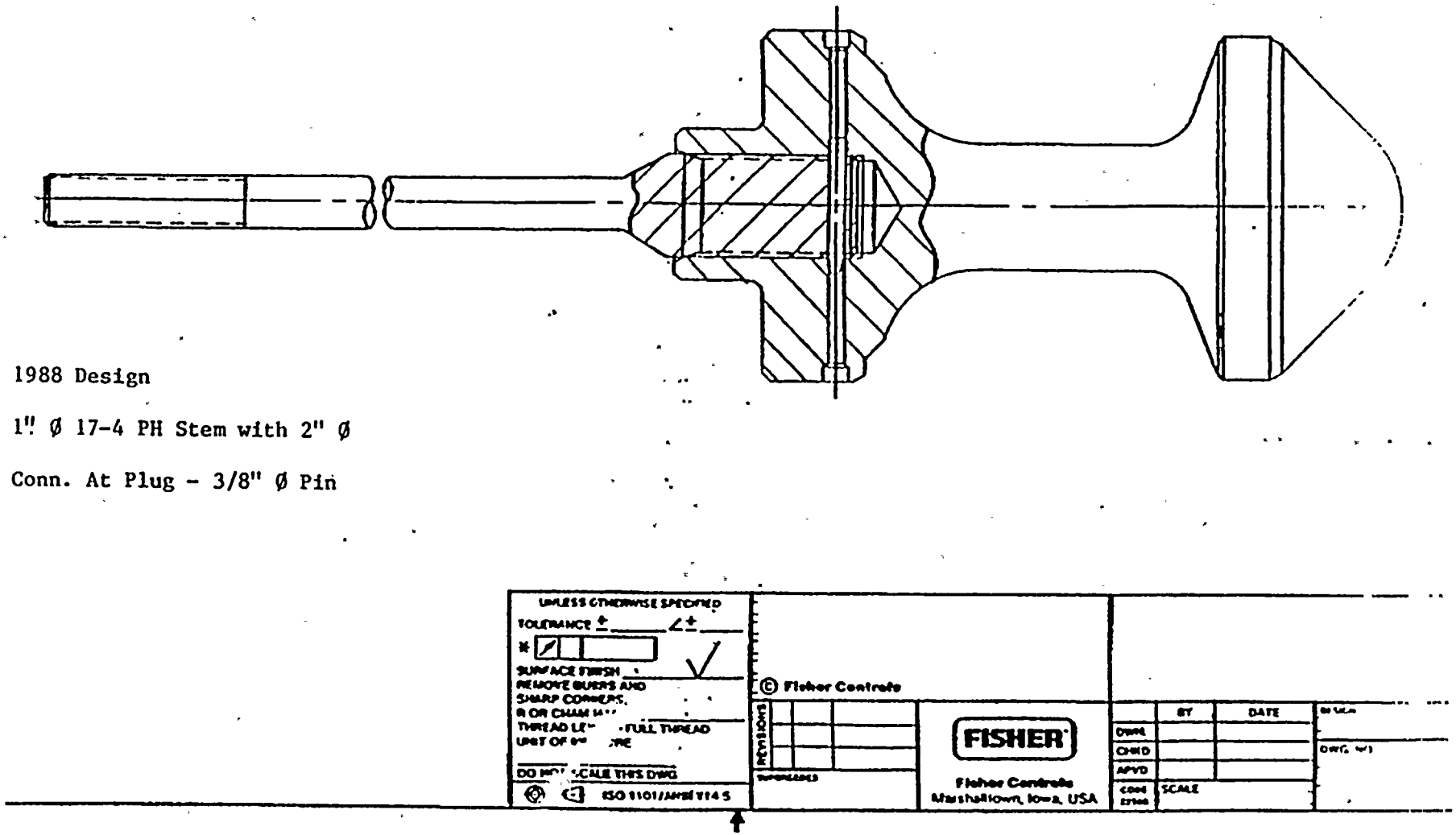

1988 Design

1" Ø 17-4 PH Stem with 2" Ø

Conn. At Plug - 3/8" Ø Pin

FIGURE 6

The conclusion, then, is that a recurrence of the event is improbable during the normal operating cycles between scheduled refueling outages when the valve internals are routinely replaced.

2) The extensive inspection of the Feedwater System piping supports revealed those supports that needed repair following the event. With those repairs having been carried out, the Feedwater System is ready for service. Such repairs will be completed before startup following the refueling outage. The analyses of the piping system (static, dynamic and fatigue) demonstrate that no allowable stresses were exceeded during the event. Inspection of those welds most subject to high stress revealed no damage. It is, therefore, concluded that the integrity of the feedwater piping and support system has not been impaired by the event.

3) The leaking elbow at the suction of FWP 11, discovered as a result of the event, has been repaired. The thickness of this elbow wall, although it does not have the full corrosion allowance is acceptable providing that it is monitored in the future. Repairs were made to FWP 13 and its volute and impeller were replaced. The internals of the FCV 13s were replaced, and the stems of FCV 11 and FCV 12 were inspected and found to be free of any flaws. It was originally planned that operation would resume, until the scheduled March 1988 refueling outage, with these internals. As a result of proceeding directly to the

refueling outage, the internals in the 11 and 12 FCVs will be replaced before the next startup if further inspection shows that replacement is justified. All of the affected components will be in good working order at startup.

4) Sufficient analyses and repairs have been completed or planned to resume full power operation upon completion of the refueling outage. The piping system, the flow control valves and the FWP 13 will be visually observed by the plant operators during startup. Operation to full power will continue only if operation at management decide, based on experience and judgment, that it is prudent.

The piece of impeller inlet turning vane of the FWP 13 has not been found, and its location is not known. It was not found in the FWP 13 nor in the first 50 feet of the discharge line nor in the two 13 FCVs. Because of the toughness of the material, it is believed that it passed through the pump in one piece; it also could easily be carried by the flowing feedwater. It will most likely end up in the channel head of one of the fifth stage feedwater heaters; its dimensions (a triangular shape about 1 3/4" x 1 7/32" x 1 7/8") preclude its passage through the 0.603 inch inside diameter heater tubes unless it is broken up or corrodes severely. A safety evaluation has concluded (see Appendix G) that the piece would have no safety consequences if

it got into the reactor vessel and that the probability of what might be a serious event (i.e., being caught in a closing isolation check valve on the occasion of a large break LOCA in a feedwater line inside the drywell) was considered negligible (on the order of 1E-11).

B) Longer Term Concerns

Because redesign of the FCV 13 valve stem clearly strengthens it, the probability of a similar failure has been reduced. However, the hydraulic forces which cause the plug to move still exist; the plug and cages are expected to wear as a result; this wear produces increased plug - cage clearances, which in turn increases the reverse bending stresses which caused the latest failure.

Longer term modifications in the Feedwater System will also be evaluated. A detailed engineering review of the Feedwater System design and operation is needed before any modification can be determined. Specific areas to be reviewed include the following:

1) The feedwater control valve type, size and arrangement.

2) Feedwater control system design and function.

3) Acoustic/vibration monitoring of components.

VII. RESOLUTION OF CONCERNS (Continued)

4) Control valve types, sizes and arrangements used in other BWRs and their service history.

The design review is to be completed by December 31, 1988.

APPENDIX A

REV. 2/24/88
1

SUPPORT	EXAM DATE	EXAM RESULTS	EXAM STATUS: ACCEPT AS IS	EXAM STATUS: ACCEPT W/REPAIR	EXAM STATUS: ENGR DISPOS.	EXAM STATUS: REJECT	NCR NUMBER	DATE NCR GENER.	DATE NCR CLOSED	OR NUMBER	ENGINEERING DISPOSITION	WR NUMBER	COMMENTS	NIS-2 REQUIRED Y	NIS-2 REQUIRED N	PMT EXAM COMPLETE DATE	DATE ACCEPT FOR SVC.
15-SC-7	12/20	BENT ROD		X								127019			X	NR	1/4/88
16-SC-18	12/20	LOOSE JAM NUT		X								16348			X	NR	12/30/87
29-01	12/20	NO RECORDABLES	X												X		12/20/87
29-02	1/4/88	NO RECORDABLES	X												X		1/4/88
29-03	1/4/88	NO RECORDABLES	X												X		1/4/88
29-8A*	12/20& 12/29	LOOSE CLAMP NUT		X								132736			X	1/7/88	1/11/88
29-9A*	12/20& 12/29	NO RECORDABLES	X												X		12/29/87
29-A1*	12/20& 12/29	2 BOLTS ARE LOOSE, 1 BOLT SHEARED OFF			X	X	1-87-0060	12/30	1/6/88		REPLACE BOLTS	132924	WELDING ASME INSPECTOR REVIEWING				1/20/88
29-A2	1/4/88	NO RECORDABLES	X												X		1/4/88
29-H1	12/20& 1/11/88	NO RECORDABLES SETTING @5400 #	X												X		12/20/87
29-H11*	12/29	LOOSE NUT ON SPRING CAN		X								127544			X	1/7/88	1/11/88
29-H12	1/6/88	LOOSE LOCK NUT ON EAST CAN TO ROD		X								132920			X	1/12/88	1/14/88
29-H13	12/20	NO RECORDABLES	X												X		12/20/87
29-H14	12/20	NO RECORDABLES	X												X		12/20/87
29-H15	12/20	NO RECORDABLES	X												X		12/20/87
29-H17	12/20	NO RECORDABLES	X												X		12/20/87
29-H18	1/6/88	LOOSE LOCKNUT ON ON EAST CAN TO ROD		X								132784			X	1/12/88	1/14/88
29-H19	12/20	TOP BOLT IS LOOSE		X								16329			X	12/22/87	1/6/88

*INCLUDED IN [illegible]EERING SPECIAL WALKDOWN PROCEDURE
**INCLUDED [illegible]EERING SPECIAL SNUBBER TEST PROCEDURE

REV. 2/24/88
2

SUPPORT	EXAM DATE	EXAM RESULTS	EXAM STATUS: ACCEPT AS IS	ACCEPT W/REPAIR	ENGR DISPOS.	REJECT	NCR NUMBER	DATE NCR GENER.	DATE NCR CLOSED	OR NUMBER	ENGINEERING DISPOSITION	WR NUMBER	COMMENTS	NIS-2 REQUIRED Y	N	PMT EXAM COMPLETE DATE	DATE ACCEPT FOR SVC.
29-H2	12/20 1/11/88	TOP EMBEDMENT 1/8-1/4" FROM CEILING - BOLTS ARE TIGHT	X		X		1-88-0017	1/17/88	OPEN		RE. WORK QUICK BOLTS	133067	MWH#00300		X		OPEN
29-H20	12/20	LOOSE BOLT		X								10333			X	12/26/87	12/29/87
29-H21	12/20	NO RECORDABLES	X												X		12/20/87
29-H22	1/6/88	LOOSE LOCKNUT ON WEST CAN TO ROD	X									132795			X	1/12/88	1/6/88
29-H23	12/20	NO RECORDABLES	X												X		12/20/87
29-H24	12/20	NO RECORDABLES	X												X		12/20/87
29-H25	1/6/88	LOOSE PIPE CLAMP NUT, MISSING PIPE CLAMP NUT		X								10328				12/22/87	1/6/88
29-H26	12/20	NO RECORDABLES	X												X		12/20/87
29-H27	12/20	NO RECORDABLES	X												X		12/20/87
29-H28	12/20	NO RECORDABLES	X												X		12/20/87
29-H30	1/6/88	NO RECORDABLES	X												X		1/6/88
29-H4	12/20 1/1 1/88	QUESTION LOAD LOAD-9100#	X									132929	RESET TO 13,0000		X		OPEN
29-H6*	12/20 & 12/29	QUESTION LOAD (NO LOAD SET)	X		X						RESET TO 10,3000	132730			X		OPEN
29-H7	12/20	ACTUAL SPRING SETTING ABOVE HOT SETTING			X		1-87-0092	12/27			USE AS IS				X	NOT REQUIRED	1/11/88
29-H8*	12/20	MOVED 2-3"			X	X	1-87-0078	12/2	12/22		USE AS IS		PIPING DETERMINED TO BE IN NORMAL COLD POSITION		X	NOT REQUIRED	12/22/87
29-H9*	12/20 & 12/29	NO RECORDABLES	X												X		12/29/87
29-HS-1	12/20	NO RECORDABLES	X												X		12/20/87
29-HS-10*	12/20 & 12/29	NO RECORDABLES	X												X		12/29/87

*INCLUDED IN ENGINEERING SPECIAL WALKDOWN PROCEDURE
**INCLUDED IN ENGINEERING SPECIAL SNUBBER TEST PROCEDURE

REV. 2/24/88
3

SUPPORT	EXAM DATE	EXAM RESULTS	EXAM STATUS: ACCEPT AS IS	EXAM STATUS: ACCEPT W/REPAIR	EXAM STATUS: ENGR. DISPOS.	EXAM STATUS: REJECT	NCR NUMBER	DATE NCR GENER.	DATE NCR CLOSED	OR NUMBER	ENGINEERING DISPOSITION	WR NUMBER	COMMENTS	NIS-2 REQUIRED Y	NIS-2 REQUIRED N	PMT EXAM COMPLETE DATE	DATE ACCEPT FOR SVC.
29-HS-11* **	12/20& 12/30	BENT ROD ON SNUBBER MT EXAM ON LUG WELDS UNACCEPTABLE			X	X	1-87-0081 1-87-0077	12/24/1/87		87-359	0077 HLP AFWR PLACE SNUBBER 0081; GRIND FLAP WELDS FOR MT EXAM *	16345* 132657 132931	MWR M00291; MOD 88 04 LUGS DONE - ACC. ;7M WR 016345 AT SSS OFFICE WAITING PMT	X			
29-HS-12*	12/29 1/11/88	LOOSE LOCKNUT ON PISTON PISTON - 1 1/4 P/P - 21 3/4		X								132571			X	1/8/88	1/11/88
29-HS-13	12/20 1/11/88	NO RECORDABLES PISTON - 2 1/4 P/P - 21 1/2	X												X		12/20/87
29-HS-14*	12/20& 12/30 1/11/88	LOOSE PIPE CLAMP NUT PISTON-4 1/8 P/P - 23 1/2		X							RE-ALIGN SNUBBER	132737 133012	PROBLEM W/RE ALIGN NO CLEARANCE		X	1/8/88	1/11/88
29-HS-15	12/20 1/11/88	NO RECORDABLES PISTON - 1 7/8 P/P - 45 1/2	X												X		12/20/87
29-HS-16* **	12/20& 12/30& 1/8/88	BENT I-BEAM, 2 CRACKED WELDS			X	X	1-88-0006	1/8/88			WELD, MODIFIED	132934	CLEARANCE SHOULD DURING REMOVAL FOR TESTING				2/13/88
29-HS-17* **	12/20& 12/30 1/11/88	LOOSE PIPE CLAMP NUT PISTON - 2 7/8 P/P - 27 1/2		X								132935 132752	SNUBBER TEST NOT DONE, TEST - LOOSE BOLTS TIGHTENED		X	1/6/88 1/11/88	1/7/88
29-HS-2*	12/20& 12/30	BENT/BROKEN RES. BRACKET			X	X	1-87-0076	12/21	1/7/88	87-359	RE WORK SEE NCR RESPONSE	133068	RE WELD RESPONSE ACCEPTED				1/22/88
29-HS-3*	12/20& 12/30	BENT/BROKEN RES. BRACKET			X	X	1-87-0078	12/21	1/7/88	87-359	RE WORK SEE NCR RESPONSE	133069	RE WELD RESPONSE ACCEPTED				1/22/88
29-HS-4*	12/20& 12/30	BENT/BROKEN RES. BRACKET			X	X	1-87-0078	12/21	1/7/88	87-359	RE WORK SEE NCR RESPONSE	133070	RE WELD RESPONSE ACCEPTED				1/22/88
29-HS-5*	12/20& 12/30	BENT/BROKEN RES. BRACKET			X	X	1-87-0078	12/21	1/7/88	87-359	RE WORK SEE NCR RESPONSE	133071	RE WELD RESPONSE ACCEPTED				1/22/88
29-HS-6**	12/23& 12/31	OIL LEAKAGE - PISTON SEAL RESERVOIR 1/2 FULL LOOSE PIPE CLAMP		X							PMT NOT REQUIRED WR CLOSED	132756 132932	SNUBBER TEST COMPLETED			1/8/88	1/11/88
29-HS-7	12/20	NO RECORDABLES	X												X		12/20/87
29-HS-8* **	12/27& 12/29	BENT(MOVEMENT)- LOOSE CLAMP BOLT			X	X	1-87-0063	12/27	1/9/88		REMOVE AND BENCH TEST PER SPEC, SNUBBER PROC.	132933	ALL WORK COMPLETE ACCEPTED		X	1/9/88	1/14/88
29-HS-9*	12/20& 12/29	NO RECORDABLES	X												X		12/29/87
29-MK-B* (29-SC-2)	12/29 1/11/88	BASE PLATE PULLED FROM WALL 1/4"			X	X	1-88-003	1/4/88			AWAITING RESULTS OF RE TORQUING	132667 133066	132667 COMPLETE 133066 TACK WELD EYE BOLT		X		1/12/88
29-MK-C	12/20 1/11/88	NO RECORDABLES	X												X		12/20/87
29-MK-M	12/20	NO RECORDABLES	X												X		12/20/87

*INCLUDED IN [illegible]ERING SPECIAL WALKDOWN PROCEDURE
**INCLUDED I[illegible]ERING SPECIAL SNUBBER TEST PROCEDURE

REV. 2/24/88
4

SUPPORT	EXAM DATE	EXAM RESULTS	EXAM STATUS: ACCEPT AS IS	ACCEPT W/REPAIR	ENGR. DISPOS.	REJECT	NCR NUMBER	DATE NCR GENER.	DATE NCR CLOSED	OR NUMBER	ENGINEERING DISPOSITION	WR NUMBER	COMMENTS	NIS-2 REQUIRED Y	N	PMT EXAM COMPLETE DATE	DATE ACCEPT FOR SVC.
29-MK-Q	12/20	NO RECORDABLES	X												X		12/20/87
29-MK-R	12/20& 12/29	2 CRACKED TACKS ON BOLTING			X	X	1-87-0000	12/30			REPLACE TWO BOLTS	132923	ASME III WELDER INCL FOR REVIEW				1/20/88
29-MK-U	12/20	NO RECORDABLES	X												X		12/20/87
29-MK-V	12/20	NO RECORDABLES	X										STRUCTURAL ENGR. TO ADVISE				12/20/87
29-MK-W	12/20	NO RECORDABLES	X												X		12/20/87
29-MK-X	12/20	NO RECORDABLES	X												X		12/20/87
29-MK-Y	1/4/88	CEMENT BROKEN MISSING			X						USE AS IS REF. FILE CODE 3 HZ, 1 SIZ		STRUCT ENGR (TBD). FILE CODE 3 HZ, 1 SIZ		X		1/20/88
29-MS-1	1/6/88	NO RECORDABLES	X												X		1/6/88
29-R2	1/6/88	NO RECORDABLES	X												X		1/6/88
29-R4*	12/29& 1/5/88	LOOSE JAM NUT ON TOP		X								132574				1/6/88	1/7/88
29-R4-A	12/29	NO RECORDABLES	X												X		12/29/87
29-R4-B	12/29	NO RECORDABLES	X												X		12/29/87
29-R4-BB	12/29	NO RECORDABLES	X												X		12/29/87
29-R4-C*	12/29& 1/7/88	BROKEN ROD AT CEILING, BOLT AND NUT MISSING ON PIPE CLAMP			X	X	1-88-001	1/1	1/8/88		REPLACE MISSING AND BROKEN PARTS	133000					1/21/88
29-R4-D**	12/29& 1/7/88	MISSING NUT ON PIPE, CLAMP BOLT, ROD IS OUT		X								132002	ON HOLD FOR PARTS				1/20/88
29-R4-E	12/29	NO RECORDABLES	X												X		12/29/87
29-R4-F	12/29	NO RECORDABLES	X												X		12/29/87
29-R4-G*	12/29& 1/4/88	LOOSE BOLTS AT CLEVIS		X								132003			X	1/7/88	1/11/88

*INCLUDED IN ENGINEERING SPECIAL WALKDOWN PROCEDURE
**INCLUDED IN ENGINEERING SPECIAL SNUBBER TEST PROCEDURE

REV. 2/24/88
5

SUPPORT	EXAM DATE	EXAM RESULTS	EXAM STATUS: ACCEPT AS IS	ACCEPT W/REPAIR	ENGR. DISPOS.	REJECT	NCR NUMBER	DATE NCR GENER.	DATE NCR CLOSED	OR NUMBER	ENGINEERING DISPOSITION	WR NUMBER	COMMENTS	NIS-2 REQUIRED Y	N	PMT EXAM COMPLETE DATE	DATE ACCEPT FOR SVC.
29-R4-H	12/29	NO RECORDABLES	X												X		12/29/87
29-R4-J	12/29	NO RECORDABLES	X												X		12/29/87
29-R4-JA*	12/29& 1/5/88&1/7/88	NO RECORDABLES	X									132664			X	1/13/88	1/15/88
29-R4-K*	12/29& 1/5/88	MISSING NUT AT CLAMP		X								132573				1/11/88	1/11/88
29-R4-L*	12/29& 1/5/88	NO RECORDABLES	X												X		1/5/88
29-R4-N*	12/29& 1/5/88	MISSING JAM NUT ON BOTTOM OF HANGER ROD		X								132665					1/15/88
29-R4-P*	12/29& 1/5/88	LOOSE JAM NUT ON BOTTOM OF HANGER ROD		X								132666	WORK DONE, 1/7/88		X	1/7/88	1/1/88
29-R4-Q*	12/29& 1/5/88	MISSING NUT AT CLAMP, LOOSE NUT ON HANGER ROD		X								132542					1/11/88
29-R5-A	1/4/88	NO RECORDABLES	X												X	1/4/88	1/4/88
29-SC-100*	12/29	BROKEN ANGLE IRON - LOOSE BOLTS			X	X	1-87-0068	12/30			SEE MODIFICATION 88-04		MWI M00298	X			1/21/88
29-SC-25*	12/20& 12/30	NO RECORDABLES	X												X		12/31/87
29-SC-26*	12/20& 12/30	NO RECORDABLES	X												X		12/30/87
29-SCR-3*	12/29& 1/5/88	NO RECORDABLES	X												X		1/5/88
29-SCR-3A	12/29	NO RECORDABLES	X												X		12/29/87
29-SCR-3B	12/29	NO RECORDABLES	X												X		12/29/87
29-SCR-3C	12/29& 1/4/88	EMBEDDED PLATE PULLED OUT 1/4", CONCRETE DAMAGE FROM TEE			X	X	1-88-003	1/4/88			MODIFICATION 88-04		MWI M00293	X			2/8/88
29-SCR-3D*	12/29& 1/4/88& 1/7/88	PULLED FROM WALL 2", ONE TEE IS BENT, ONE TEE WELD CRACKED			X	X	1-88-003 1-88-003	1/1/88 1/4/88	1/14/88		MODIFICATION 88-04	133068	MWI M00293	X			2/8/88
29-SCR-3E*	12/29& 1/5/88&1/7/88	TEE'S WELDED TO COLLAR, COLLAR ROTATED		X								132668			X		1/18/88

*INCLUDED IN [illegible]ERING SPECIAL WALKDOWN PROCEDURE
**INCLUDED I[illegible]EERING SPECIAL SNUBBER TEST PROCEDURE

REV. 2/24/88
6

SUPPORT	EXAM DATE	EXAM RESULTS	EXAM STATUS: ACCEPT AS IS	ACCEPT W/REPAIR	ENGR. DISPOS.	REJECT	NCR NUMBER	DATE NCR GENER.	DATE NCR CLOSED	OR NUMBER	ENGINEERING DISPOSITION	WR NUMBER	COMMENTS	NIS-2 REQUIRED Y	NIS-2 REQUIRED N	PMT EXAM COMPLETE DATE	DATE ACCEPT FOR SVC.
29-SR-1	1/6/88	NO RECORDABLES	X												X		1/6/88
29-SR-10	1/6/88	NO RECORDABLES	X												X		1/6/88
29-SR-11	1/6/88	NO RECORDABLES	X												X		1/6/88
29-SR-12	1/6/88	NO RECORDABLES	X												X		1/6/88
29-SR-13	1/6/88	NO RECORDABLES	X												X		1/6/88
29-SR-3	1/6/88	NO RECORDABLES	X												X		1/6/88
29-SR-4	1/6/88	NO RECORDABLES	X												X		1/6/88
29-SR-6	1/6/88	NO RECORDABLES	X												X		1/6/88
29-SR-8	1/6/88	NO RECORDABLES	X												X		1/6/88
29-SR-9	1/6/88	NO RECORDABLES	X												X		1/6/88
29-SS-1	1/6/88	NO RECORDABLES	X												X		1/6/88
29-SS-11	1/6/88	NO RECORDABLES	X												X		1/6/88
29-SS-12	1/6/88	NO RECORDABLES	X												X		1/6/88
29-SS-13	1/6/88	NO RECORDABLES	X				NCR 1-88 0021	1/18/88			USE AS IS		A1-SSS WAIE NO SYS PMT		X		
29-SS-14	1/6/88	NO RECORDABLES	X												X		1/6/88
29-SS-15	1/6/88	NO RECORDABLES	X												X		1/6/88
29-SS-16	1/6/88	NO RECORDABLES	X												X		1/6/88
29-SS-17	1/6/88	NO RECORDABLES	X												X		1/6/88

*INCLUDED IN ENGINEERING SPECIAL WALKDOWN PROCEDURE
**INCLUDED IN ENGINEERING SPECIAL SNUBBER TEST PROCEDURE

REV. 2/24/88
7

SUPPORT	EXAM DATE	EXAM RESULTS	EXAM STATUS: ACCEPT AS IS	ACCEPT W/REPAIR	ENGR. DISPOS.	REJECT	NCR NUMBER	DATE NCR GENER.	DATE NCR CLOSED	OR NUMBER	ENGINEERING DISPOSITION	WR NUMBER	COMMENTS	NIS-2 REQUIRED Y	N	PMT EXAM COMPLETE DATE	DATE ACCEPT FOR SVC.
29-SS-19	1/6/88	NO RECORDABLES	X												X		1/6/88
29-SS-2	1/6/88	NO RECORDABLES	X												X		1/6/88
29-SS-20	1/6/88	NO RECORDABLES	X												X		1/6/88
29-SS-21	1/6/88	NO RECORDABLES	X												X		1/6/88
29-SS-22	1/6/88	NO RECORDABLES	X												X		1/6/88
29-SS-23	1/6/88	NO RECORDABLES	X												X		1/6/88
29-SS-24	1/6/88	NO RECORDABLES	X												X		1/6/88
29-SS-25	1/6/88	NO RECORDABLES	X												X		1/6/88
29-SS-26	1/6/88	NO RECORDABLES	X												X		1/6/88
29-SS-27	1/6/88	NO RECORDABLES	X												X		1/6/88
29-SS-28	1/6/88	NO RECORDABLES	X				NCR 1-88-0022	1/18/88			USE AS IS		AI SSS WAITING STS PMT		X		
29-SS-29	1/6/88	NO RECORDABLES	X												X		1/6/88
29-SS-3	1/6/88	NO RECORDABLES	X												X		1/6/88
29-SS-30	1/6/88	NO RECORDABLES	X												X		
29-SS-31	1/6/88	NO RECORDABLES	X				NCR 1-88-0018	1/18/88			AWAITING MOD #		MODULE ELB 25H1		X		1/6/88
29-SS-32	1/6/88	NO RECORDABLES	X												X		1/6/88
29-SS-33	1/6/88	NO RECORDABLES	X												X		1/6/88
29-SS-34	1/6/88	NO RECORDABLES	X												X		1/6/88

*INCLUDED IN [illegible]ERING SPECIAL WALKDOWN PROCEDURE
**INCLUDED IN [illegible]ERING SPECIAL SNUBBER TEST PROCEDURE

REV. 2/24/88
8

SUPPORT	EXAM DATE	EXAM RESULTS	EXAM STATUS: ACCEPT AS IS	ACCEPT W/REPAIR	ENGR DISPOS.	REJECT	NCR NUMBER	DATE NCR GENER.	DATE NCR CLOSED	OR NUMBER	ENGINEERING DISPOSITION	WR NUMBER	COMMENTS	NIS-2 REQUIRED Y	N	PMT EXAM COMPLETE DATE	DATE ACCEPT FOR SVC.
29-SS-35	1/6/88	NO RECORDABLES	X												X		1/6/88
29-SS-36	1/6/88	NO RECORDABLES	X												X		1/6/88
29-SS-37	1/6/88	LOOSE CLAMP NUT, LACK OF FULL THREAD ENGAGEMENT ON JAM NUT		X								133010			X	1/13/88	1/15/88
29-SS-4	1/6/88	NO RECORDABLES	X												X		1/6/88
29-SS-5	1/6/88	NO RECORDABLES	X												X		1/6/88
29-SS-6	1/6/88	NO RECORDABLES	X												X		1/6/88
29-SS-8	1/6/88	NO RECORDABLES	X												X		1/6/88
30-54	12/20	NO RECORDABLES	X												X		12/20/87
30-H1	12/20	NO RECORDABLES	X												X		12/20/87
30-H10	12/20	SPRING SETTING ACTUAL CLOSE TO HOT SETTING			X		1-87-0002	12/27			USE AS IS						1/11/88
30-H11	12/20	STUD/NUT ON PIPE CLAMP-FULL THD. ENGAGE.		X								132753	FULL THREAD ENGAGE. QUESTION		X		1/16/88
30-H12	12/20	NO RECORDABLES	X												X		12/20/87
30-H13	12/20	NO RECORDABLES	X												X		12/20/87
30-H14	12/20	NO RECORDABLES	X												X		12/20/87
30-H15	12/20	NO RECORDABLES	X												X		12/20/87
30-H16	12/20	NO RECORDABLES	X												X		12/20/87
30-H17	12/20	NO RECORDABLES	X												X		12/20/87
30-H18	12/20	NO RECORDABLES	X												X		12/20/87

*INCLUDED IN ENGINEERING SPECIAL WALKDOWN PROCEDURE
**INCLUDED IN ENGINEERING SPECIAL SNUBBER TEST PROCEDURE

REV. 2/24/88
9

SUPPORT	EXAM DATE	EXAM RESULTS	EXAM STATUS: ACCEPT AS IS	ACCEPT W/REPAIR	ENGR. DISPOS.	REJECT	NCR NUMBER	DATE NCR GENER.	DATE NCR CLOSED	OR NUMBER	ENGINEERING DISPOSITION	WR NUMBER	COMMENTS	NIS-2 REQUIRED Y	N	PMT EXAM COMPLETE DATE	DATE ACCEPT FOR SVC.
30-H19	12/20	NO RECORDABLES	X												X		12/20/87
30-H2	12/20	NO RECORDABLES	X												X		12/20/87
30-H20*	12/20& 12/29	NO RECORDABLES	X												X		12/29/87
30-H3	12/20	NO RECORDABLES	X												X		12/20/87
30-H4	12/20	NO RECORDABLES	X												X		12/20/87
30-H5	12/20	NO RECORDABLES	X												X		12/20/87
30-H6	12/20	NO RECORDABLES	X												X		12/20/87
30-H7	12/20	NO RECORDABLES	X												X		12/20/87
30-H8	12/20	NO RECORDABLES	X												X		12/20/87
30-H9	12/20	NO RECORDABLES	X												X		12/20/87
30-HS-1	12/20	PIN-TO-PIN & STROKE SETTINGS TO BE CHECKED, MISSING BOLT ON RESERVOIR		X	X		1-87-0082	12/27			USE AS IS	132917				1/9/88	1/14/88
30-HS-2*	12/20& 12/29	PIN-TO-PIN & STROKE SETTINGS TO BE CHECKED			X		1-87-0082	12/27			USE AS IS						1/11/88
30-HS-3	12/20	PIN-TO-PIN & STROKE SETTINGS TO BE CHECKED, LOOSE RESERVOIR CLAMP		X	X		1-87-0082	12/27			USE AS IS	132916				1/8/88	1/11/88
30-HS-4	12/20	NO RECORDABLES	X												X		12/20/87
30-HS-5*	12/20& 12/29	NO RECORDABLES	X												X		12/29/87
30-MK-E*	12/20& 12/30	NO RECORDABLES	X												X		12/30/87
30-MK-M*	12/20& 12/30	NO RECORDABLES	X												X		12/30/87
30-MK-P	12/20	NO RECORDABLES	X												X		12/20/87

*INCLUDED IN [illegible]ERING SPECIAL WALKDOWN PROCEDURE
**INCLUDED I[illegible]EERING SPECIAL SNUBBER TEST PROCEDURE

REV. 2/24/88
10

SUPPORT	EXAM DATE	EXAM RESULTS	EXAM STATUS: ACCEPT AS IS	ACCEPT W/REPAIR	EXCR DISPOS.	REJECT	NCR NUMBER	DATE NCR GENER.	DATE NCR CLOSED	OR NUMBER	ENGINEERING DISPOSITION	WR NUMBER	COMMENTS	NIS-2 REQUIRED Y	N	PMT EXAM COMPLETE DATE	DATE ACCEPT FOR SVC.
30-P14*	12/20& 12/29	LOOSE JAM NUT		X								12/543			X	1/7/88	1/11/88
30-SC-3	12/20	NO RECORDABLES	X												X		12/20/87
30-SC-4	12/20	NO RECORDABLES	X												X		12/20/87
31-A1	12/20	NO RECORDABLES	X												X		12/20/87
31-A2	12/20	NO RECORDABLES	X												X		12/20/87
31-H10A	12/30	NO RECORDABLES	X												X		12/30/87
31-H10B	12/30	NO RECORDABLES	X												X		12/30/87
31-H11*	12/30	MOVED 1"	X												X		12/30/87
31-H12A	12/30	LOOSE INNER CLAMP BOLT		X								132747	DRYWELL		X		1/15/88
31-H12B	12/30	NO RECORDABLES	X												X		12/30/87
31-H3	12/30	NO RECORDABLES	X												X		12/30/87
31-H4	12/30	NO RECORDABLES	X												X		12/30/87
31-H5A	12/30	BROKEN SPRING - THREAD WEAR AT NO-LOAD SETTING			X	X	1-87-0091	12/31	1/8/88		USE AS IS		ISSUED @ BREAK-APPLIAS BROKEN BEFORE TRANSLINT.				1/8/88
31-H5B	12/30	THREAD WEAR - CONTACT W/ GRATING	X												X		12/30/87
31-H6	12/30	NO RECORDABLES	X												X		12/30/87
31-H7A	12/30	NO RECORDABLES	X												X		12/30/87
31-H7B	12/30	NO RECORDABLES	X												X		12/30/87
31-H8	12/30	MOVED 1"	X												X		12/30/87

*INCLUDED IN ENGINEERING SPECIAL WALKDOWN PROCEDURE
**INCLUDED IN ENGINEERING SPECIAL SNUBBER TEST PROCEDURE

REV. 2/24/88
11

SUPPORT	EXAM DATE	EXAM RESULTS	EXAM STATUS: ACCEPT AS IS	ACCEPT W/REPAIR	ENGR DISPOS.	REJECT	NCR NUMBER	DATE NCR GENER.	DATE NCR CLOSED	OR NUMBER	ENGINEERING DISPOSITION	WR NUMBER	COMMENTS	NIS-2 REQUIRED Y	N	PMT EXAM COMPLETE DATE	DATE ACCEPT FOR SVC.
31-H9	12/30	NO RECORDABLES	X												X		12/30/87
31-HS-1	12/30	LOOSE INNER CLAMP BOLT		X								132746	Ultrasonic		X		1/18/88
31-HS-2	12/30	NO RECORDABLES	X												X		12/30/87
49-H1	12/20	NO RECORDABLES	X												X		12/20/87
49-H4	12/20	BENT ROD		X								16349			X	NOT REQ'D (NSR, NON ASME)	1/3/88
49-NES-H1	12/20	NO RECORDABLES	X												X		12/20/87
49-SC-1	12/20	NO RECORDABLES	X												X		12/20/87
51-01	12/30	NO RECORDABLES	X												X		12/30/87
51-03	12/20	NO RECORDABLES	X												X		12/20/87
51-04	12/20	NO RECORDABLES	X												X		12/20/87
51-05	12/20	NO RECORDABLES	X												X		12/20/87
51-06	12/20	NO RECORDABLES	X												X		12/20/87
51-07	12/20	NO RECORDABLES	X												X		12/20/87
51-08	12/20	NO RECORDABLES	X												X		12/20/87
51-09	12/20	NO RECORDABLES	X												X		12/20/87
51-10	12/20	NO RECORDABLES	X												X		12/20/87
51-11	12/20	NO RECORDABLES	X												X		12/20/87
51-12	12/20	NO RECORDABLES	X												X		12/20/87

*INCLUDED [illegible] EERING SPECIAL WALKDOWN PROCEDURE
**INCLUDED [illegible] EERING SPECIAL SNUBBER TEST PROCEDURE

SUPPORT	EXAM DATE	EXAM RESULTS	EXAM STATUS: ACCEPT AS IS	ACCEPT W/REPAIR	ENGR DISPOS.	REJECT	NCR NUMBER	DATE NCR GENER.	DATE NCR CLOSED	OR NUMBER	ENGINEERING DISPOSITION	WR NUMBER	COMMENTS	NIS-2 REQUIRED Y	N	PMT EXAM COMPLETE DATE	DATE ACCEPT FOR SVC.
51-13	12/20	NO RECORDABLES	X												X		12/20/87
51-14	12/20	NO RECORDABLES	X												X		12/20/87
51-15	12/20	NO RECORDABLES	X												X		12/20/87
51-16	12/20	NO RECORDABLES	X												X		12/20/87
51-17	12/20	NO RECORDABLES	X												X		12/20/87
51-18	12/20	NO RECORDABLES	X												X		12/20/87
51-H1	12/30	NO RECORDABLES	X												X		12/30/87
51-H11	12/20	NO RECORDABLES	X												X		12/20/87
51-H12	12/20	NO RECORDABLES	X												X		12/20/87
51-H13	12/20	NO RECORDABLES	X												X		12/20/87
51-H15	12/30	NO RECORDABLES	X												X		12/30/87
51-H16	12/30	NO RECORDABLES	X												X		12/30/87
51-H18	12/20	NO RECORDABLES	X												X		12/20/87
51-H19	12/20	NO RECORDABLES	X												X		12/20/87
51-H2	12/30	NO RECORDABLES	X												X		12/30/87
51-H20	12/30	NO RECORDABLES	X												X		12/30/87
51-H21	12/30	NO RECORDABLES	X												X		12/30/87
51-H22	12/30	NO RECORDABLES	X												X		12/30/87

*INCLUDED IN ENGINEERING SPECIAL WALKDOWN PROCEDURE
**INCLUDED IN ENGINEERING SPECIAL SNUBBER TEST PROCEDURE

SUPPORT	EXAM DATE	EXAM RESULTS	EXAM STATUS: ACCEPT AS IS	ACCEPT W/REPAIR	ENGR DISPOS.	REJECT	NCR NUMBER	DATE NCR GENER.	DATE NCR CLOSED	OR NUMBER	ENGINEERING DISPOSITION	WR NUMBER	COMMENTS	NIS-2 REQUIRED Y	N	PMT EXAM COMPLETE DATE	DATE ACCEPT FOR SVC.
51-H24	12/20	NO RECORDABLES	X												X		12/20/87
51-H25	12/20	NO RECORDABLES	X												X		12/20/87
51-H26	12/20	NO RECORDABLES	X												X		12/20/87
51-H28	12/20	NO RECORDABLES	X												X		12/20/87
51-H3	12/30	NO RECORDABLES	X												X		12/30/87
51-H30	12/20	NO RECORDABLES	X												X		12/20/87
51-H32	12/20	NO RECORDABLES	X												X		12/20/87
51-H33	12/20	NO RECORDABLES	X												X		12/20/87
51-H34	12/20	NO RECORDABLES	X								USE AS IS				X		1/11/88
51-H34	12/23	SETTINGS IN HOT SET			X						USE AS IS				X		1/11/88
51-H36	12/20	NO RECORDABLES	X												X		12/20/87
51-H38	12/20	NO RECORDABLES	X												X		12/20/87
51-H39	12/20	NO RECORDABLES	X												X		12/20/87
51-H4	12/30	NO RECORDABLES	X												X		12/30/87
51-H41*	12/20& 12/29	NO RECORDABLES	X												X		12/29/87
51-H43	12/20	NO RECORDABLES	X												X		12/20/87
51-H43A	12/20	NO RECORDABLES	X												X		12/20/87
51-H44	12/20	NO RECORDABLES	X												X		12/20/87

*INCLUDED IN [illegible]RING SPECIAL WALKDOWN PROCEDURE
**INCLUDED IN [illegible]ERING SPECIAL SNUBBER TEST PROCEDURE

SUPPORT	EXAM DATE	EXAM RESULTS	EXAM STATUS: ACCEPT AS IS	ACCEPT W/REPAIR	ENGR. DISPOS.	REJECT	NCR NUMBER	DATE NCR GENER.	DATE NCR CLOSED	OR NUMBER	ENGINEERING DISPOSITION	WR NUMBER	COMMENTS	NIS-2 REQUIRED Y	N	PMT EXAM COMPLETE DATE	DATE ACCEPT FOR SVC.
51-H45	12/20	NO RECORDABLES	X												X		12/20/87
51-H47	12/20	NO RECORDABLES	X												X		12/20/87
51-H48	12/20	NO RECORDABLES	X												X		12/20/87
51-H50	12/20	NO RECORDABLES	X												X		12/20/87
51-H51	12/20	NO RECORDABLES	X												X		12/20/87
51-H52	12/20	NO RECORDABLES	X												X		12/20/87
51-H53	12/20	NO RECORDABLES	X												X		12/20/87
51-H54	12/20	NO RECORDABLES	X												X		12/20/87
51-H55	12/20	NO RECORDABLES	X												X		12/20/87
51-H56	12/20	NO RECORDABLES	X												X		12/20/87
51-H57	12/20	NO RECORDABLES	X												X		12/20/87
51-H58	12/20	NO RECORDABLES	X												X		12/20/87
51-H59	12/20	NO RECORDABLES	X												X		12/20/87
51-H6	1/6/88	NO RECORDABLES	X												X		1/6/88
51-H60	12/20	NO RECORDABLES	X												X		12/20/87
51-H61	12/20	NO RECORDABLES	X												X		12/20/87
51-H62	12/20	NO RECORDABLES	X												X		12/20/87
51-H63	12/20	NO RECORDABLES	X												X		12/20/87

*INCLUDED IN ENGINEERING SPECIAL WALKDOWN PROCEDURE
**INCLUDED IN ENGINEERING SPECIAL SNUBBER TEST PROCEDURE

SUPPORT	EXAM DATE	EXAM RESULTS	EXAM STATUS: ACCEPT AS IS	ACCEPT W/REPAIR	ENGR. DISPOS.	REJECT	NCR NUMBER	DATE NCR GENER.	DATE NCR CLOSED	OR NUMBER	ENGINEERING DISPOSITION	WR NUMBER	COMMENTS	NIS-2 REQUIRED Y	N	PMT EXAM COMPLETE DATE	DATE ACCEPT FOR SVC.
51-H64	12/20	NO RECORDABLES	X												X		12/20/87
51-H65	12/20	NO RECORDABLES	X												X		12/20/87
51-H66	12/20	NO RECORDABLES	X												X		12/20/87
51-H67	12/20	NO RECORDABLES	X												X		12/20/87
51-H68	12/20	NO RECORDABLES	X												X		12/20/87
51-H69	12/20	NO RECORDABLES	X												X		12/20/87
51-H8	1/6/88	NO RECORDABLES	X												X		1/6/88
51-HS-10*	12/29	FLAMMASTIC PULLED FROM PEN.	X										EVIDENCE OF PIPE MOVEMENT		X		12/29/87
51-HS-11*	12/29	NO RECORDABLES	X												X		12/29/87
51-HS-12*	12/29	LOOSE LOCKNUT ON SHAFT		X								132569	EVIDENCE OF PIPE MOVEMENT, WORK COMPLETED 1/7/88		X	1/7/88	1/11/88
51-HS-2	12/20	NO RECORDABLES	X												X		12/20/87
51-HS-3	12/20	NO RECORDABLES	X												X		12/20/87
51-HS-4	12/20	NO RECORDABLES	X												X		12/20/87
51-HS-5	12/20	NO RECORDABLES	X												X		12/20/87
51-HS-6	12/20	LOOSE PIPE CLAMP NUT		X								16330			X		1/6/88
51-HS-7	12/20	NO RECORDABLES	X												X		12/20/87
51-HS-8	12/20	LOOSE PIPE CLAMP NUT		X								16331			X	12/22/87	1/6/88
51-MK-12	12/30	NO RECORDABLES	X												X		12/30/87

*INCLUDED IN [illegible]RING SPECIAL WALKDOWN PROCEDURE
**INCLUDED IN [illegible]ERING SPECIAL SNUBBER TEST PROCEDURE

SUPPORT	EXAM DATE	EXAM RESULTS	EXAM STATUS: ACCEPT AS IS	EXAM STATUS: ACCEPT W/REPAIR	EXAM STATUS: ENGR. DISPOS.	EXAM STATUS: REJECT	NCR NUMBER	DATE NCR GENER.	DATE NCR CLOSED	OR NUMBER	ENGINEERING DISPOSITION	WR NUMBER	COMMENTS	NIS-2 REQUIRED Y	NIS-2 REQUIRED N	PMT EXAM COMPLETE DATE	DATE ACCEPT FOR SVC.
51-MK-31	12/20	NO RECORDABLES	X												X		12/20/87
51-MK-53	12/30	NO RECORDABLES	X												X		12/30/87
51-MK-A1	1/6/88	NO RECORDABLES	X												X		1/6/88
51-MK-A2*	12/30	2 BOLTS ARE LOOSE 1 BOLT SHEARED OFF			X	X	1-87-0088	12/31	1/6/88		REPLACE BOLTS	132924	VERIFIED GOOD				1/20/88
51-MK-B*	12/29	MISSING BOLT - BASE PLATE BOLT LOOSE		X								132570	REPLACED MISSING NUT & BOLT			1/9/88	1/14/88
51-MK-D	12/20	NO RECORDABLES	X												X		12/20/87
51-MK-E	12/20	NO RECORDABLES	X												X		12/20/87
51-MK-F	12/20	NO RECORDABLES	X												X		12/20/87
51-MK-G*	12/20 & 12/30	MINOR WELD CLEANING - SLAG		X								132748			X	1/7/88	1/11/88
51-MK-H10	1/6/88	NO RECORDABLES	X												X		1/6/88
51-MK-H17	1/6/88	NO RECORDABLES	X												X		1/6/88
51-MK-H23	1/6/88	NO RECORDABLES	X												X		1/6/88
51-MK-H5	1/6/88	NO RECORDABLES	X												X		1/6/88
51-MK-H7	1/6/88	NO RECORDABLES	X												X		1/6/88
51-MK-H9	12/30	NO RECORDABLES	X												X		12/30/87
51-MK-I	12/20	NO RECORDABLES	X												X		12/20/87
51-MK-K	12/20	NO RECORDABLES	X												X		12/20/87
51-MK-M	12/20	NO RECORDABLES	X												X		12/20/87

*INCLUDED IN ENGINEERING SPECIAL WALKDOWN PROCEDURE
**INCLUDED IN ENGINEERING SPECIAL SNUBBER TEST PROCEDURE

SUPPORT	EXAM DATE	EXAM RESULTS	EXAM STATUS: ACCEPT AS IS	EXAM STATUS: ACCEPT W/REPAIR	EXAM STATUS: ENGR DISPOS.	EXAM STATUS: REJECT	NCR NUMBER	DATE NCR GENER.	DATE NCR CLOSED	OR NUMBER	ENGINEERING DISPOSITION	WR NUMBER	COMMENTS	NIS-2 REQUIRED Y	NIS-2 REQUIRED N	PMT EXAM COMPLETE DATE	DATE ACCEPT FOR SVC.
51-MK-N	12/20	MOVED 1-1/2"			X	X	1-87-0079	12/21	12/22		USE AS IS		PIPING DETERMINED TO BE IN NORMAL COLD POSITION			NOT REQUIRED	12/22/87
51-MK-Q	12/20	NO RECORDABLES	X												X		12/20/87
51-MK-R	12/20	NO RECORDABLES	X												X		12/20/87
51-MK-SC-1	1/4/88	MISSING BOLT		X								132919 132928	CHG WR 132919 LOST 132928 TO REPLACE				1/21/88
51-MK-SC-13	12/30	NO RECORDABLES	X												X		12/30/87
51-MK-SC-3	1/6/88	NO RECORDABLES	X												X		1/6/88
51-MK-SC-4	1/6/88	NO RECORDABLES	X												X		1/6/88
51-MK-SC-5	12/30& 1/6/88	NO RECORDABLES	X												X		12/30/87
51-MK-X	1/6/88	NO RECORDABLES	X												X		1/6/88
51-MS-1	12/20	NO RECORDABLES	X												X		12/20/87
51-SC-10	12/20	NO RECORDABLES	X												X		12/20/87
51-SC-101*	12/29& 1/8/88	LOOSE BOLTS, SHEARED BOLT		X			1-88-0008	1/11/88				132572	MODIFICATION 88 04 MWR M00294				OPEN
51-SC-11	12/20	NO RECORDABLES	X												X		12/20/87
51-SC-12	12/20	NO RECORDABLES	X												X		12/20/87
51-SC-15	12/20	NO RECORDABLES	X												X		12/20/87
51-SC-16	12/20	NO RECORDABLES	X												X		12/20/87
51-SC-18	12/20	NO RECORDABLES	X												X		12/20/87
51-SC-19	12/20	NO RECORDABLES	X												X		12/20/87

*INCLUDED IN [illegible]EERING SPECIAL WALKDOWN PROCEDURE
**INCLUDED [illegible]EERING SPECIAL SNUBBER TEST PROCEDURE

SUPPORT	EXAM DATE	EXAM RESULTS	EXAM STATUS: ACCEPT AS IS	ACCEPT W/REPAIR	ENGR. DISPOS.	REJECT	NCR NUMBER	DATE NCR GENER.	DATE NCR CLOSED	OR NUMBER	ENGINEERING DISPOSITION	WR NUMBER	COMMENTS	NIS-2 REQUIRED Y	N	PMT EXAM COMPLETE DATE	DATE ACCEPT FOR SVC.
51-SC-2	12/30	NO RECORDABLES	X												X		12/30/87
51-SC-21	12/20	NO RECORDABLES	X												X		12/20/87
51-SC-22	12/20	NO RECORDABLES	X												X		12/20/87
51-SC-31	12/20	NO RECORDABLES	X												X		12/20/87
51-SC-32	12/20	LOOSE JAM & CLAMP NUT		X								16332			X	12/27/87	12/29/87
51-SC-34A*	12/30	MISSING NUT ON STUD CONNECTION		X								132731				1/8/88	1/11/88
51-SC-35*	12/20& 1/4/88	BOTH SWAY BRACES BENT	X		X								STRUCT ENGR TO ANYSE ON ULM SWAY BRACES				1/4/88
51-SC-36	12/20	NO RECORDABLES	X												X		12/20/87
51-SC-37	12/20	NO RECORDABLES	X												X		12/20/87
51-SC-41	12/20	NO RECORDABLES	X												X		12/20/87
51-SC-42	12/20	NO RECORDABLES	X												X		12/20/87
51-SC-43	12/20	NO RECORDABLES	X												X		12/20/87
51-SC-44	12/20	NO RECORDABLES	X												X		12/20/87
51-SC-45	12/20	NO RECORDABLES	X												X		12/20/87
51-SC-46	12/20	NO RECORDABLES	X												X		12/20/87
51-SC-47	1/6/88	NO RECORDABLES	X												X		1/6/88
51-SC-49*	12/20& 12/30	NO RECORDABLES	X												X		12/30/87
51-SC-50	12/20	NO RECORDABLES	X												X		12/20/87

*INCLUDED IN ENGINEERING SPECIAL WALKDOWN PROCEDURE
**INCLUDED IN ENGINEERING SPECIAL SNUBBER TEST PROCEDURE

SUPPORT	EXAM DATE	EXAM RESULTS	EXAM STATUS: ACCEPT AS IS	EXAM STATUS: ACCEPT W/REPAIR	EXAM STATUS: ENGR. DISPOS.	EXAM STATUS: REJECT	NCR NUMBER	DATE NCR GENER.	DATE NCR CLOSED	OR NUMBER	ENGINEERING DISPOSITION	WR NUMBER	COMMENTS	NIS-2 REQUIRED Y	NIS-2 REQUIRED N	PMT EXAM COMPLETE DATE	DATE ACCEPT FOR SVC.
51-SC-6	12/30	NO RECORDABLES	X												X		12/30/87
51-SC-7	12/20	NO RECORDABLES	X												X		12/20/87
51-SC-8	12/20	NO RECORDABLES	X												X		12/20/87
51-SC-9	12/20	NO RECORDABLES	X												X		12/20/87
SYS. 36 PENE. (X-71-D)	12/30	BROKEN CLAMP			X	X	1-88-002	1/2			REPAIR	133186			X		1/30/88
SYS 64 -2" VENT (FW	12/20	BENT ROD		X								16343					12/30/87
SYS.64 VALVE 64-17	12/20	DISCONNECTED AND MOVED CLAMPS		X								132658			X		1/8/88

*INCLUDED I[illegible]EERING SPECIAL WALKDOWN PROCEDURE
**INCLUDED [illegible]EERING SPECIAL SNUBBER TEST PROCEDURE