NINE MILE POINT NUCLEAR STATION UNIT 2

MECHANICAL PREVENTIVE MAINTENANCE PROCEDURE

PROCEDURE NO. N2-MPM-R18

MAIN STEAM ISOLATION VALVES
2MSS*HYV 6A,B,C,D AND 2MSS*HYV 7A,B,C,D

APPROVALS	SIGNATURES	DATE AND INITIALS REVISION 0	REVISION 1	REVISION 2
Maintenance Superintendent NMPNS Unit 2 K. A. Dahlberg	KADahlberg	12/20/85 KAD		
Station Superintendent NMPNS Unit 2 R. B. Abbott	RBAbbott	12/20/85		
General Superintendent Nuclear Generation T. J. Perkins	TJPerkins	12/21/85 TJP		

CONTROLLED COPY

Summary of Pages

Revision 0 (Effective 1/2/86)

Pages	Date
1-11	November 1985

NIAGARA MOHAWK POWER CORPORATION

THIS PROCEDURE NOT TO BE
USED AFTER JANUARY 1988
SUBJECT TO PERIODIC REVIEW.

MAIN STEAM ISOLATION VALVES
2MSS*HYV 6A,B,C,D AND 2MSS*HYV 7A,B,C,D

1.0 PURPOSE

1.1 This procedure describes the steps necessary to inspect and maintain the Main Steam Isolation Valves.

1.2 Applicability - This procedure is applicable to the Main Steam Isolation Valves, equipment I.D. numbers 2MSS*HYV 6A, 2MSS*HYV 6B, 2MSS*HYV 6C, 2MSS*HYV 6D, 2MSS*HYV 7A, 2MSS*HYV 7B, 2MSS*HYV 7C, 2MSS*HYV 7D, located in the Reactor Building on elevation 253'-0" and Reactor Building Drywell on elevation 253'-0".

1.3 Frequency - This procedure should normally be performed each refueling.

1.4 Quality Requirements - QA Cat. I, NRC Safety Related.

2.0 REFERENCES

2.1 NMPC Radiation Protection Procedures.

2.2 NMPC Accident Prevention Rules.

2.3 AP-3.3.1 Control of Equipment Markups.

2.4 AP-2 Production and Control of Procedures.

2.5 MI-2.0 Maintenance Instructions for Writing Procedures.

2.6 Twenty-four inch 900 Class Main Steam Isolation Valve with Series 600 Actuator, Installation, Operation and Maintenance Manual, DOCNO: EH3323N, Access No. 430003912.

2.7 Stone & Webster Drawing 12177-FSK-3-1A.

2.8 Stone & Webster Drawing 12177-FSK-3-1B.

2.9 Stone & Webster Drawing 12177-EE-9EH-3.

2.10 Stone & Webster Drawing 12177-EE-9EM-3.

2.11 Stone & Webster Drawing 12177-EE-9EL-3.

3.0 TECHNICAL SPECIFICATIONS

3.1 Section 3/4.4.7, Main Steam Isolation Valves.

4.0 SPECIAL TOOLS, MATERIALS, AND M&TE

4.1 Dow Corning 510-100 Hydraulic Fluid or NMPC approved equivalent.

4.2 Dow Light Silicone Grease or NMPC approved equivalent.

5.0 PRECAUTIONS AND LIMITATIONS

5.1 Use care when handling hydraulic fluid, avoid spilling and activities causing sparks. Hydraulic fluid may be flammable.

5.2 No others unless specified by the RWP and ALARA review.

5.3 Personnel radiation exposure reduction is the responsibility of all station personnel. Methods of reducing your exposure as well as the entire work group exposure should be a significant concern in job planning and performance.

6.0 PREREQUISITES

6.1 Plant Conditions - Any plant condition within Technical Specification requirements.

6.2 System Conditions - Component to be worked on should be isolated and deenergized as required.

6.3 Mark-Ups - Obtain mark-ups per Section 9 of NMPC Accident Prevention Rules for the following equipment: (Valves shall be marked up closed and breakers de-energized, racked out, and marked up.) The Mark-up man shall be the maintenance man in charge of the work.

6.3.1 2MSS*HYV 6A.

6.3.1.1 2MSS*HYV 6A.

6.3.1.2 2NHS-MCC012 BKR 2D.

6.3.2 2MSS*HYV 6B.

6.3.2.1 2MSS*HYV 6B.

6.3.2.2 2NHS-MCC012 BKR 3C.

6.3.3 2MSS*HYV 6C.

6.3.3.1 2MSS*HYV 6C.

6.3.3.2 2NHS-MCC012 BKR 3D.

6.3.4 2MSS*HYV 6D.

6.3.4.1 2MSS*HYV 6D.

6.3.4.2 2NHS-MCC012 BKR 4B.

6.3.5 2MSS*HYV 7A.

6.3.5.1 2MSS*HYV 7A.

6.3.5.2 2NHS-MCC011 BKR 4D.

6.3.6 2MSS*HYV 7B.

6.3.6.1 2MSS*HYV 7B.

6.3.6.2 2NHS-MCC011 BKR 5C.

6.3.7 2MSS*HYV 7C.

6.3.7.1 2MSS*HYV 7C.

6.3.7.2 2NHS-MCC011 BKR 5D.

6.3.8 2MSS*HYV 7D.

6.3.8.1 2MSS*HYV 7D.

6.3.8.2 2NHS-MCC011 BKR 5E.

6.4 Radiation Work Permit (RWP) - Obtain an RWP in accordance with RP-2 of Radiation Protection Procedures for the Reactor Building at elevation 253'-0" and Reactor Building Drywell on elevation 253'-0".

6.5 Obtain permission from SSS to start and initial on the Work Request.

Plant Impact: Marked-up equipment will not be available for service.

6.6 Notify CSO of intent to perform maintenance.

6.7 Notify QC.

6.8 Notify ISI Coordinator and I&C Supervisor of intent to perform maintenance.

6.9 Personnel performing this procedure have read it in its entirety and are thoroughly familiar with its contents.

6.10 Maintain/establish the appropriate cleanliness level for the maintenance to be performed.

6.11 Record calibrated test equipment and tools. Verify equipment is calibrated and attach calibration data sheets.

NOTE: This procedure generally inspects the actuator for the MSIV's. Valve performance is indicated by leak rate tests and maintenance performed using work requests.

7.0 PROCEDURE

7.1 For actuator cover sections removal, perform applicable Steps 7.1.1 - 7.1.4.

7.1.1 Install eye bolts in one end cover and one side cover and rig hoist as required.

7.1.2 Remove end cover fasteners and remove end cover to a suitable location.

7.1.3 Rig hoist to side cover as required.

7.1.4 If required, remove side cover fasteners and remove side cover to a suitable location.

7.2 Actuator Inspection (Figure 10.1.1)

7.2.1 Visually check piston rod for leakage at seals. Record on Data Sheet.

7.2.2 Visually check pump, strainer relief valve, solenoids and piping for leakage. Record on Data Sheet.

7.2.3 Check fasteners for tightness, torque as required (see Figure 10.1.3). Record on Data Sheet.

7.2.4 Remove, check, clean and/or replace hydraulic filter. Record on Data Sheet.

7.2.5 Check hydraulic fluid level, add as required using Dow Corning 510-100 or NMPC approved equivalent. Record on Data Sheet.

7.2.6 Check hydrualic cylinders for cracking or leakage. Record on Data Sheet.

7.2.7 Lubricate bearing tracks using Dow Light Silicone Grease or NMPC approved equivalent. Record on Data Sheet.

7.2.8 Draw a sample of hydraulic fluid in a clean container. Send to Lab for contamination and degradation testing. Record on Data Sheet.

7.3 Valve Inspection (Figure 10.1.2)

7.3.1 Check stuffing boxes for excessive leakage. Tighten as required. Record on Data Sheet.

7.4 Actuator Cover Sections Installation

7.4.1 Rig hoist to side cover.

7.4.2 Set side cover in place on actuator, install and tighten fasteners. Record on Data Sheet.

7.4.3 Rig hoist to end cover.

7.4.4 Set end cover in place on actuator, install and tighten fasteners. Record on Data Sheet.

7.4.5 If required, remove eye bolts.

7.5 Request Operations to cycle valve if possible, check for packing or hydraulic fluid leaks.

7.5.1 Request Electrical Maintenance take readings at pressure transducer during opening operation. A low reading or increasingly high reading may indicate degrading of actuator springs. Record on Data Sheet.

8.0 RETURN TO NORMAL

8.1 Clear/surrender mark-ups.

NOTE: Clean/decontaminate the work site to its original condition or better.

8.2 Return the RWP.

9.0 ACCEPTANCE CRITERIA

9.1 Valve operates without packing or hydraulic fluid leaks.

10.0 ATTACHMENTS

10.1 Figures and Illustrations.

10.1.1 Actuator Assembly.

10.1.2 Valve.

10.1.3 Standard Torque Values for Fasteners.

10.2 Data Sheets.

FIGURE 10.1.1

ACTUATOR ASSEMBLY

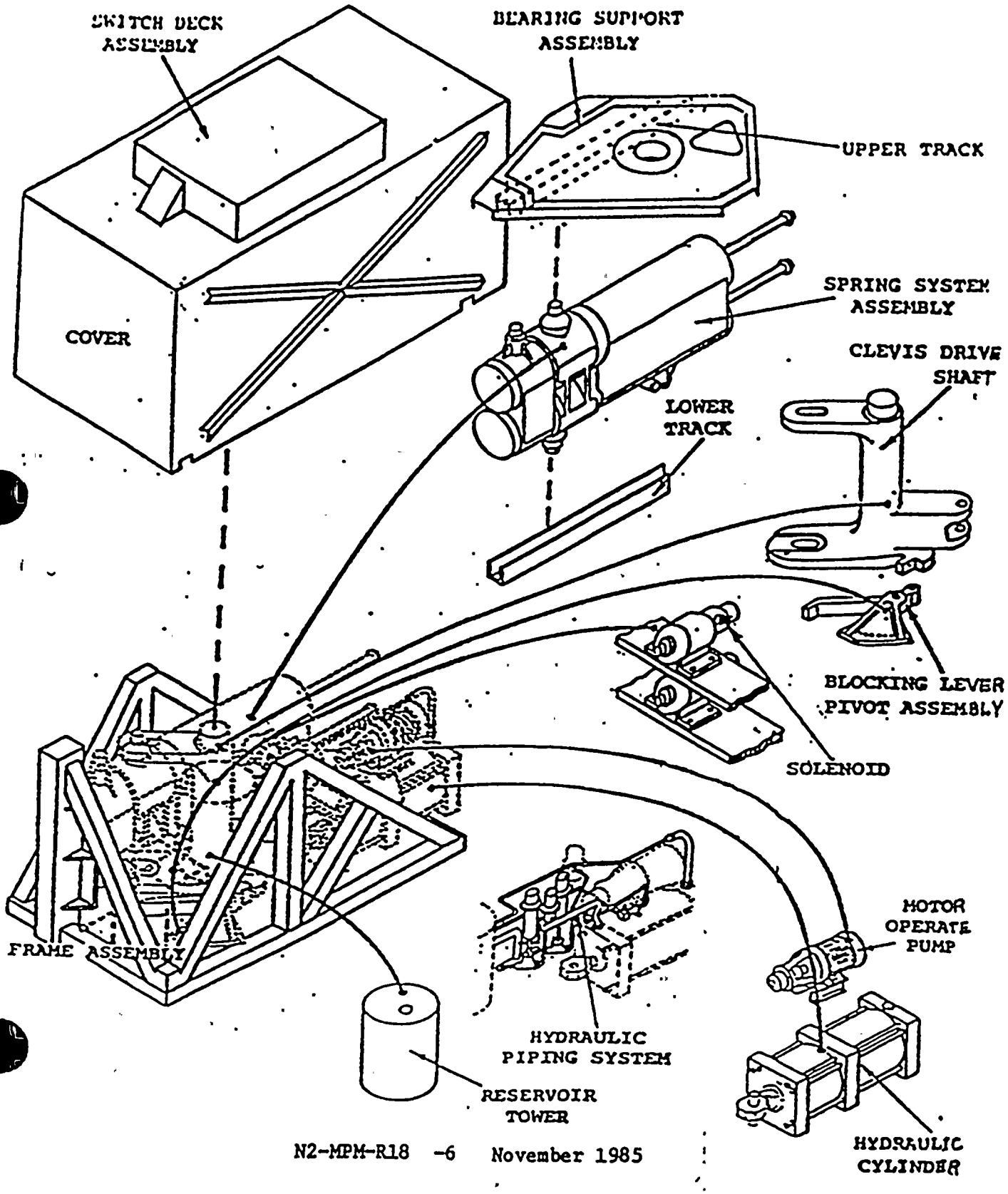

FIGURE 10.1.2

VALVE

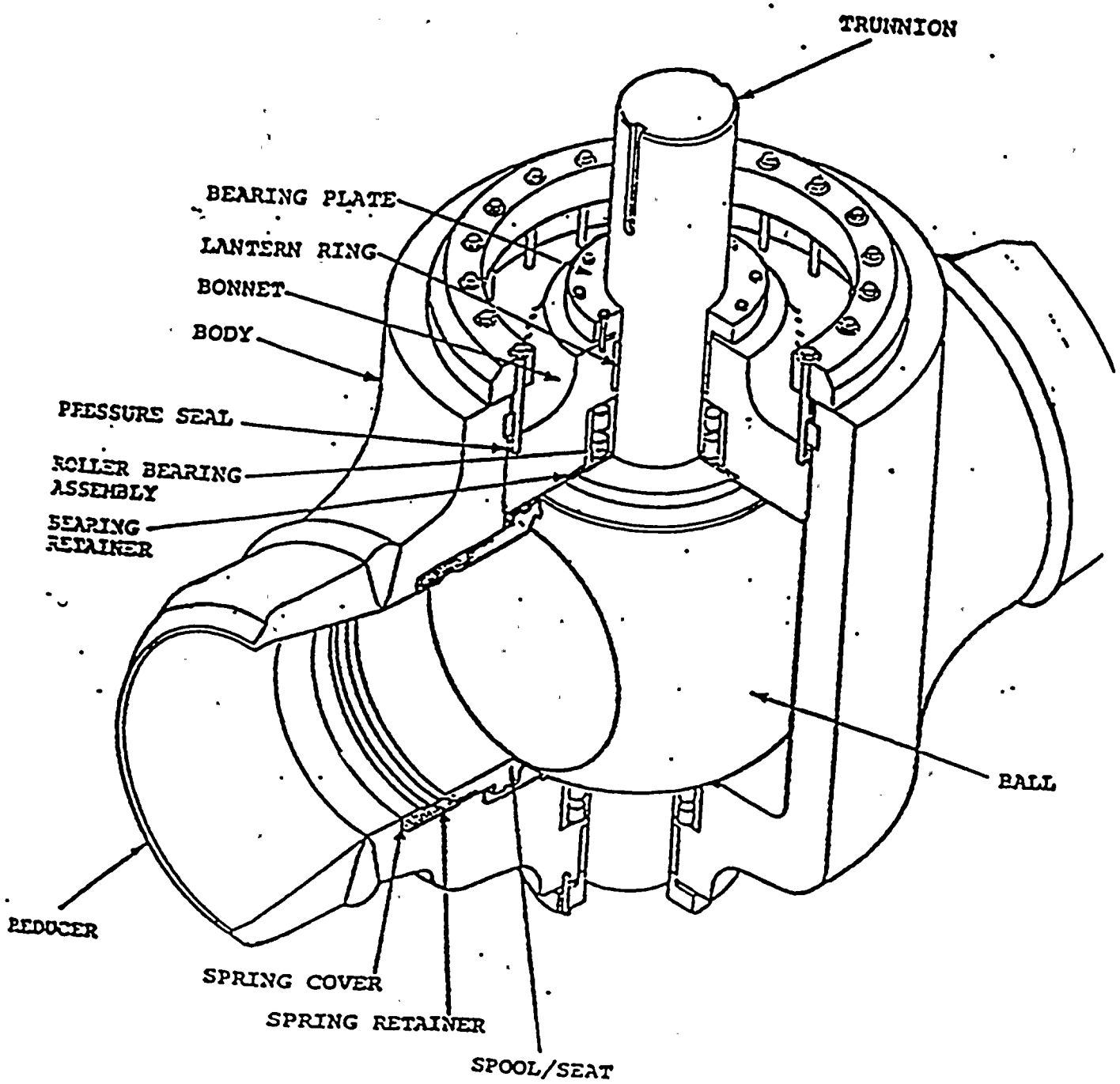

FIGURE 10.1.3

STANDARD TORQUE VALUES FOR FASTENERS

Fastener Type	Material	Fastener Size Torque Foot-Pounds						
		1/4	5/16	3/8	1/2	5/8	3/4	1
Hex Head Cap Screw	Low Carbon Steel (SAE-J-429)	6	12	18	45	90	150	368
	GR 5 (SAE-J-429) Alloy Steel (ASTM-193 B7)	10	19	33	78	154	247	500
	GR 8 (SAE-J-429)	14	29	47	119	230	380	757
Socket Head Cap Screw	High Carbon (ASTM-A-574) Case Harden Steel	16	33	54	125	250	400	—
Socket Set Screw	High Carbon Case Harden Steel	6	12	18	43	100	146	—

Equipment Piece No. _____ Attachment 10.2

DATA SHEET

MAIN STEAM ISOLATION VALVES
2MSS*HYV 6A,B,C,D AND 2MSS*HYV 7A,B,C,D

A. VERIFICATION OF PROCEDURE STEPS: INITIAL / DATE

Prerequisites

6.1	Plant conditions satisfactory.		Maint.	_____/_____
6.2	System out of service.		Maint.	_____/_____
6.3	Mark-ups hung.	No. _____	Maint.	_____/_____
6.4	Radiation Work Permit (RWP) obtained.	No. _____	Maint.	_____/_____
6.5	Permission granted.		Maint.	_____/_____
6.6	CSO notified.		Maint.	_____/_____
6.7	QC notified.		Maint.	_____/_____
6.8	ISI and I&C notified.		Maint.	_____/_____
6.9	Personnel familiar with procedure.		Maint.	_____/_____
6.10	Maintain cleanliness level.		Maint.	_____/_____
6.11	Record calibrated equipment. Attach calibration sheets.		Maint.	_____/_____

Procedure

7.2.1	Checked piston rod for leakage.	Maint.	_____/_____
7.2.2	Checked pump, strainer relief valve, solenoids and piping for leakage.	Maint.	_____/_____
7.2.3	Checked fasteners for tightness.	Maint.	_____/_____
7.2.4	Checked hydraulic filter.	Maint.	_____/_____
7.2.5	Checked hydraulic fluid level.	Maint.	_____/_____
7.2.6	Checked hydraulic cylinders.	Maint.	_____/_____
7.2.7	Lubricated bearing tracks.	Maint.	_____/_____
7.2.8	Sampled hydraulic fluid.	Maint.	_____/_____

Equipment Piece No. _____ Attachment 10.2

DATA SHEET

MAIN STEAM ISOLATION VALVES
2MSS*HYV 6A,B,C,D AND 2MSS*HYV 7A,B,C,D

A. VERIFICATION OF PROCEDURE STEPS (con't): INITIAL / DATE

Procedure

7.3.1	Checked stuffing boxes.	Maint.	_____/_____
7.4.2	Tightened fasteners.	Maint.	_____/_____
7.4.4	Tightened fasteners.	Maint.	_____/_____
7.5.1	Requested Electrical Maintenance take transducer readings.	Maint.	_____/_____

Return to Normal

8.1	Mark-ups cleared.	Maint.	_____/_____
8.2	RWP returned.	Maint.	_____/_____

Equipment Piece No. _____ Attachment 10.2

DATA SHEET

MAIN STEAM ISOLATION VALVES
2MSS*HYV 6A,B,C,D AND 2MSS*HYV 7A,B,C,D

B. RESULTS:

1. Satisfactory, no additional corrective action required. _____

2. Unsatisfactory, (Use Remarks section as necessary and initiate a Work Request). Work Request No. _____ _____

C. REMARKS:

_____

_____

_____

_____

_____

_____

_____

_____

_____

_____

_____

_____

_____

D. REVIEW:

_____/_____
Maintenance Man Date

_____/_____
Asst./Maintenance Supervisor Date