STONE & WEBSTER ENGINEERING CORPORATION

CALCULATION TITLE PAGE

*SEE INSTRUCTIONS ON REVERSE SIDE

A 5010 64 (FRONT)

CLIENT & PROJECT	PAGE 1 OF 38
NIAGARA MOHAWK — NMP2	

CALCULATION TITLE (Indicative of the Objective):	QA CATEGORY (✓)
VERIFICATION OF STRUCTURAL INTEGRITY OF THE MODIFIED MSIV ACTUATOR — SPEC. P303D	☐ I - NUCLEAR SAFETY RELATED ☒ II ☐ III ☐ _____ OTHER

CALCULATION IDENTIFICATION NUMBER				OPTIONAL WORK PACKAGE NO.
J. O. OR W.O. NO.	DIVISION & GROUP	CURRENT CALC. NO.	OPTIONAL TASK CODE	
12177.92	EMD	MS-2122		

* APPROVALS - SIGNATURE & DATE H Rappaport 10/24/86

PREPARER(S)/DATE(S)	REVIEWER(S)/DATE(S)	INDEPENDENT REVIEWER(S)/DATE(S)	REV. NO. OR NEW CALC NO.	SUPERSEDES * CALC. NO. OR REV. NO.	CONFIRMATION *REQUIRED (✓) YES	NO
Gary L. Stathes 9/9/86 & N Vijayi 9/9/86 (Pg 10, 13, 15)	N Vijayi 9/9/86 P. Teperov 10/24/86		0			✓

DISTRIBUTION *

GROUP	NAME & LOCATION	COPY SENT (✓)	GROUP	NAME & LOCATION	COPY SENT (✓)
RECORDS MGT. FILES (OR FIRE FILE IF NONE)	DOCUMENT CONTROL SY				

STATEMENT OF REVIEW
CALCULATION NUMBER MS-2122

This calculation has been reviewed in accordance with EMTP 8.26-2 and was found to be adequate. The method of review was: (list the appropriate items)

a. Review of Calculation

b. Comparison with a similar previous calculation

	REVIEWER	DATE	METHOD	REV.
1.	[illegible]	9/9/86	b	0
2.	T. Roper	10/20/86	a	0
3.				

The statement below applies to Nuclear Safety Related QA Category I calculations only.

This calculation has been INDEPENDENTLY reviewed in accordance with EMTP 8.26-2 and was found to be adequate. The method of review was: (list appropriate items)

a. Comparison with prequalified methods and assumptions _____.
(prequalified document number(s)

b. Addressing the key questions appearing in EAP-5.3, and EAP-3.1 (latest revisions)

	INDEPENDENT REVIEWER	DATE	METHOD	REV.
1.				
2.				
3.				

STONE & WEBSTER ENGINEERING CORPORATION

CALCULATION SHEET

A 5010.66

CALCULATION IDENTIFICATION NUMBER				PAGE 3
J.O. OR W.O. NO. 12177.92	DIVISION & GROUP EM/MECH	CALCULATION NO. MS-2122-0	OPTIONAL TASK CODE	

TABLE OF CONTENTS

REVISION STATUS TABLE

PAGE NO. 4
CALCULATION NO. MS-2122
JOB ORDER NO. 12177.92

7730

REV NO.	PAGE NO.	REASON	REVISION/DATE	NON-INDEPENDENT REVIEWER/DATE	INDEPENDENT REVIEWER/DATE	APPROVAL/DATE

OBJECTIVE

THE PURPOSE OF THIS CALCULATION IS TO DESIGN AND ANALYZE THE ADDEI ACTUATOR COMPONENT SUPPORTS DUE TO MSIV MODIFICATIONS, AND TO VERIFY THE STRUCTURAL ADEQUACY OF THESE SUPPORTS DUE TO DEAD WEIGHT, HYDRODYNAMIC, AND SEISMIC LOADS. THIS IS NECESSARY TO ENSURE THAT DAMAGE OF THE MSIV OPERATOR WILL NOT OCCUR UNDER THE ABOVE STATED LOAD CONDITIONS.

STONE & WEBSTER ENGINEERING CORPORATION

CALCULATION SHEET

▲5010.65

CALCULATION IDENTIFICATION NUMBER				PAGE 2
J.O. OR W.O. NO.	DIVISION & GROUP	CALCULATION NO.	OPTIONAL TASK CODE	
12177.92	EMD / MECH	MS-2122-0		

ASSUMPTIONS

1. CONSERVATIVELY, THE ACCUMULATOR IS ASSUMED TO BE SIMPLY SUPPORTED.
2. ALL OTHER ASSUMPTIONS ARE STATED IN THE BODY OF CALCULATION

STONE & WEBSTER ENGINEERING CORPORATION

CALCULATION SHEET

▲5010.65

CALCULATION IDENTIFICATION NUMBER				
J.O. OR W.O. NO.	DIVISION & GROUP	CALCULATION NO.	OPTIONAL TASK CODE	PAGE 7
12177.92	EMD / MECH	MS-2122-0		

METHOD

HAND CALCULATION IS PROVIDED TO DETERMINE MAXIMUM STRESSES IN SELECTED (GOVERN) MEMBERS AND THE RESULTS ARE COMPARED TO THE ALLOWABLE STRESSES.

ALL OTHER STRUCTURAL MEMBERS HAVE BEEN QUALIFIED BY ENGINEERING JUDGEMENT

STONE & WEBSTER ENGINEERING CORPORATION

CALCULATION SHEET

5010.65

CALCULATION IDENTIFICATION NUMBER				
J.O. OR W.O. NO.	DIVISION & GROUP	CALCULATION NO.	OPTIONAL TASK CODE	PAGE 3
12177.92	EMD / MECH	MS-2122-0		

DESIGN INPUT

DESIGN INPUT IS TAKEN FROM ATTACHMENTS TO REF. #4 AND FROM REF. # 1. & REF # 2.

REFERENCES

1. S&W CALCULATION MS-2006 REV 1 'GENERATION OF ARS FOR MSIV AND SRV - UTILIZING THE AS-BUILT CONFIGURATION OF THE MAIN STEAM SYSTEM' DATED 10/25/86 FILED IN EM-2
2. S&W CALCULATION MS-2121 REV 1 "HYDRAULIC ANALYSIS – MSIV" DATED 10/21/86 FILED IN EM-2
3. AISC MANUAL .. 8-TH EDITION.
4. E&DCR M 10030A (ATTACHMENT 1)
5. O.W. BLODGETT "DESIGN OF WELDED STRUCTURES" THE JAMES F. LINCOLN ARC WELDING FOUNDATION
6. 1980 ASME BOILER AND PRESSURE VESSEL CODE, ASME 7/1/80

MATERIALS AND ALLOWABLES

HEX HEAD BOLTS:

ASTM A307 GR B [REF 3, SECT 4]

ALLOWABLE TENSION, $S_T = 20$ KSI

ALLOWABLE SHEAR, $S_S = 10$ KSI

SLOTTED HEX HEAD BOLTS:

ASTM A193 GR B7 [REF 6, SECT II, PART C]

$S_Y = 105$ KSI

$S_u = 125$ KSI

ALLOWABLE TENSION, $S_T = 0.33 S_u = 41.25$ KSI
ALLOWABLE SHEAR, $S_S = 0.22 S_u = 27.5$ KSI
[REF 3, SECT 4]

STRUCTURAL SHAPES AND PLATES:

ASTM A36 [REF 3, SECT 5]

$S_Y = 36$ KSI

$S_B, S_T = 0.6 S_Y = 21.6$ KSI

$S_S = 0.4 S_Y = 14.4$ KSI

WELDS

E-70XX ELECTRODES [REF 6, SECT II, PART C]

$S_Y = 60$ KSI

$S_u = 72$ KSI

FILLET WELD SHEAR ALLOWABLE, $S_A = 0.3 S_u = 21.6$ KSI

STONE & WEBSTER ENGINEERING CORPORATION

CALCULATION SHEET

▲5010.65

CALCULATION IDENTIFICATION NUMBER				
J.O. OR W.O. NO.	DIVISION & GROUP	CALCULATION NO.	OPTIONAL TASK CODE	PAGE 11
12177.92	EMD / MECH	MS-2122-0		

CONCLUSIONS

ALL ADDED STRUCTURAL COMPONENTS DUE TO MSIV ACTUATOR MODIFICATION HAVE BEEN VERIFIED AND FOUND TO BE ADEQUATE.

RESULTS SUMMARY

MAXIMUM STRESSES (ACCUMULATOR SUPPORT)

1. $\frac{3}{8}$" DIA BOLT

   TENSION : $\sigma_T = 7452$ PSI [Pg. 15]

   SHEAR : $\tau_s = 1218$ PSI [Pg. 15]

2. $\frac{1}{4}$" DIA SLOTTED HEX HEAD BOLT

   TENSION (DUE TO PRELOAD) : $\sigma_T = 78616$ PSI [pg. 14]

   SHEAR : $\sigma_s = 3373$ PSI [pg. 14]

3. $\frac{3}{16}$" THK X 4" WIDE STRAP

   TENSION : $\sigma_T = 339$ PSI [pg. 14]

4. WELDS

   $\sigma_{MAX} = 2104$ PSI [pg. 17]

Analysis:

1. Accumulator Supports:

wt. of the accumulator = 101 lb. (Ref. 2)

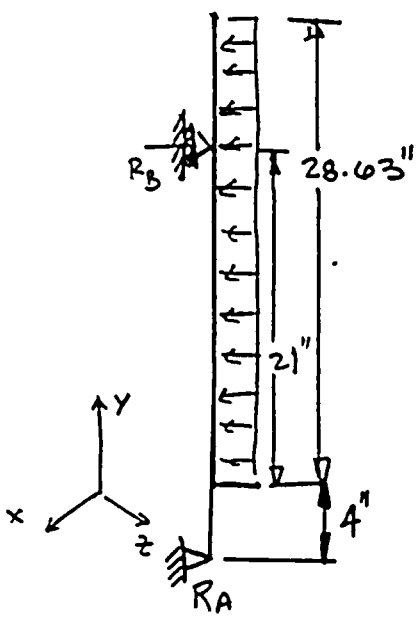

Accumulator itself is very rigid. From engineering judgement it has very high natural frequency. For conservatism peak ARS g' values are used. (Ref. 1)

$g_y = 4.75\ g$

$g_x = g_z = 4.1\ g$

$$R_B = \frac{101 \times 4.1 \times 1.414 \times 18.32}{25}$$

$= 429$ lb

$R_A = 157$ lb

VERTICAL TENSION LOAD ON THE VERTICAL RESTRAINT $= 101 \times 3.75$
$= 379$ lb

upper Support: 4 bolts carry $R_B = 429$ lb

$\therefore$ tension in each bolt $= 107$ lb

3/8" bolt stress area $= 0.078$ in^2

$\therefore \sigma = 1375$ psi $< S_T$ - O.K.

ANALYSIS

UPPER SUPPORT (CONT'D)

$\frac{3}{16}$" THK x 4" WIDE STRAP

MATL: A36

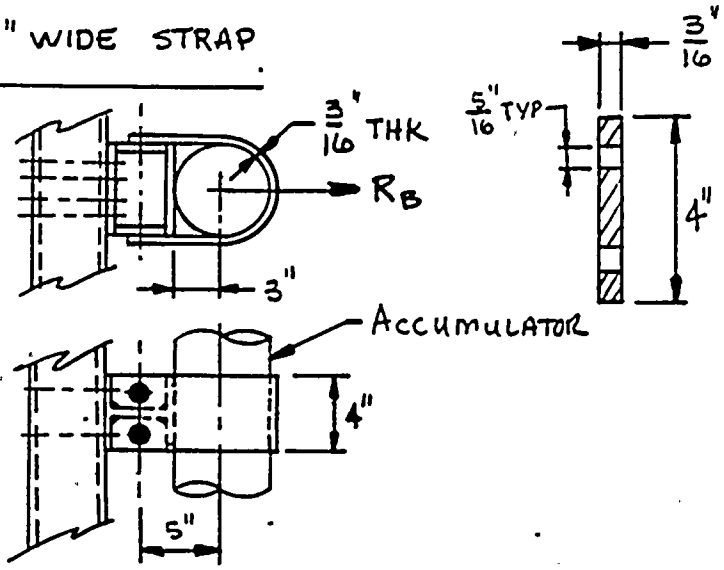

TENSION AREA, A_T

$A_T = .1875(4-.625)$

$A_T = 0.633 \text{ IN}^2$

TENSION LOADING

EACH SIDE OF THE STRAP TAKES $\frac{1}{2}$ R_B IN TENSION

$$\therefore \tau_T = \frac{R_B}{2A_T} = \frac{429}{2(0.633)} = 339 \text{ PSI} < S_T \quad \text{O.K.}$$

ALL BENDING IS RESISTED BY ACCUMULATOR TOP BRACKET

$\frac{1}{4}$" DIA SLOTTED HEAD BOLT - ASTM A193 GR B7

SHEAR

STRESS AREA = 0.0318 IN^2

4 BOLTS RESIST SHEAR ∴

$$\tau_S = \frac{R_B}{4A_S} = \frac{429}{4 \times .0318} = 3373 \text{ PSI} < S_S$$

TENSION - DUE TO TORQUING (PRELOAD)

$T = 0.2Fd$

$$\therefore F = \frac{T}{0.2d} = \frac{125}{.2(.25)} = 2500 \text{ lbs}$$

$$\tau_{TOR} = \frac{F}{A} = \frac{2500}{.0318} = 78616 \text{ PSI}$$

$\tau_{TORQUE} < \tau_{PRELOAD}$ O.K.

ALLOWABLE PRELOAD STRESS = $0.7S_u$ = 87,500 PSI

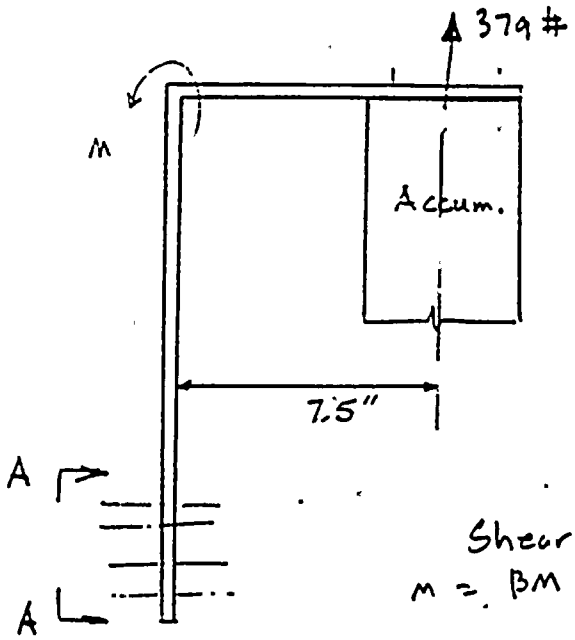

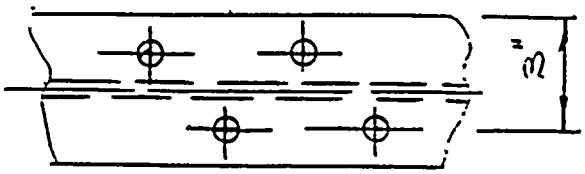

SECT. A-A

3/8" DIA BOLT (CONT'D)

Shear per bolt = 379/4 = 95 #

M = BM = 379 × 7½ = 2843 in lb.

Load on upper support bolt = $\frac{2843}{2 \times 3}$ = 474 lb

∴ TOTAL TENSILE STRESS = $1375 + \frac{474}{0.078}$ = 7452 PSI < S_T O.K.

SHEAR = $\frac{95}{.078}$ = 1218 PSI < S_S O.K.

Lower Support

LOAD IS ONLY 157 lb. BASED ON ENGINEERING JUDGEMENT, THIS SUPPORT IS STRUCTURALLY ADEQUATE. NO FURTHER ANALYSIS IS REQUIRED.

2. Pump-Motor Support :

Pump-motor assy weighs 50 lb which is less than the original wt. of the solenoids. Therefore no further analysis is required.

Other structural parts are not analyzed but accepted based on engineering judgement.

WELDS

A. UPPER SUPPORT

1. $\frac{3}{8}'' \times 3\frac{3}{8}''$ PL. TO W 4×13#

WELD PROPERTIES (TREATED AS LINE) - [REF. # 5]

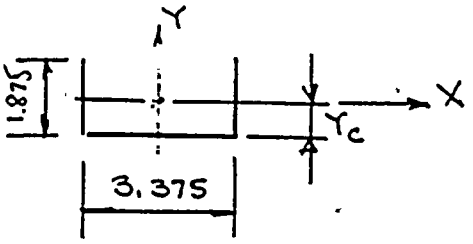

$$Y_c = \frac{1.875^2 \times \frac{1}{2} \times 2}{2 \times 1.875 + 3.375}$$

$$= 0.49 \text{ IN}$$

$$A_W = 2 \times 1.875 + 3.375$$

$$= 6.875 \text{ IN}$$

$$S_{W_Y} = bd + \frac{d^2}{6}$$

$$= 1.875 \times 3.375 + \frac{3.375^2}{6} = 8.2 \text{ IN}^2$$

$$S_{W_X} = \frac{d^2(2b+d)}{3(b+d)}$$

$$= \frac{1.875^2(2 \times 3.375 + 1.875)}{3(3.375 + 1.875)} = 1.9 \text{ IN}^2$$

$$J_W = \frac{(b+2d)^3}{12} - \frac{d^2(b+d)^2}{(b+2d)}$$

$$= \frac{(3.375 + 2 \times 1.875)^3}{12} - \frac{1.875^2(3.375 + 1.875)^2}{(3.375 + 2 \times 1.875)} = 16.5 \text{ IN}^3$$

WELDS (CONT'D)

FORCES IN WELD

$$f_x = \frac{429}{6.875 \times 2} = 31.2 \ (lb/IN)$$

$$f_Y = \frac{379}{6.875 \times 2} = 27.6 \ (lb/IN)$$

$$f_Z = \frac{429}{6.875 \times 2} = 31.2 \ (lb/IN)$$

$$f_{B_Y} = \frac{429 \times 5.5}{8.2 \times 2} = 144 \ (lb/IN)$$

$$f_T = \frac{379 \times 5.5 \times \sqrt{(1.875-0.49)^2 + \left(\frac{3.375}{2}\right)^2}}{16.5 \times 2} = 138 \ (lb/IN)$$

TOTAL FORCE IN WELD (CONSERVATIVE)

$$f_T = 31.2 + 27.6 + 31.2 + 144 + 138$$

$$= 372 \ (lb/IN)$$

MAX. STRESS IN WELD (1/4" FILLET)

$$\sigma_W = \frac{372}{0.25 \times 0.707}$$

$$= 2104 \text{ psi} < S_A \qquad \underline{OK}$$

WELDS (CONT'D)

2 TOP PLATE - TO - 3/8 × 3 3/8" OL

WELD PROPERTIES:

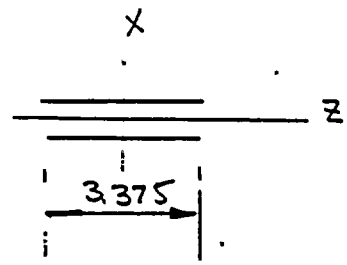

$A_W = 4 \times 3.375 = 13.5$ IN

$S_X = \frac{4 \times 3.375^2}{6} = 7.59$ IN^2

FORCES IN WELD

$f_Y = \frac{379}{13.5} = 28$ (lb/IN)

$f_{BX} = \frac{379 \times 5.5}{7.59} = 275$ (lb/IN)

TOTAL FORCE IN WELD

$f_{TW} = 275 + 28 = 303$ (lb/IN)

MAXIMUM STRESS IN WELD (1/4" FILLET)

$\sigma_W = \frac{303}{0.25 \times 0.707}$

$= 1714$ PSI $<$ SA OK

ALL OTHER WELDS ARE OK BY ENGINEERING JUDGEMENT.

12177.92 EMD/MECH MS-2122-0 ATI. 1 1/13

A M1067

STONE AND WEBSTER ENGINEERING CORPORATION
ENGINEERING & DESIGN COORDINATION REPORT

PAGE 1 OF 14 / 13

E & DCR NO: M10030A

PROJECT/CLIENT: NINE MILE POINT NUCLEAR STATION — UNIT 2 NIAGARA MOHAWK POWER CORPORATION

JOB ORDER NO: 12177

P.O. NO. S.L.W.: P303D

REASON CODE (S): F

EQUIP ID NO (S)/SYS CODE (S): 2MSS*HYV6A,B,C,D*7A,B,C,D/2MSS/001.000

REFERENCE DOCUMENTS: S&W File No. 5.360-180-398A, 171G, 191F

SUPPLIER/SUBSUPPLIER NAME: Energy Products Group

DESCRIPTION SUMMARY: Modification to MSIV actuators

REMARKS: Supersedes E&DCR M10030

PROBLEM DESCRIPTION: (* PN 2Y86M1R) AREA 1/REACTOR MOD*

Original Problem-
The MSIV latching mechanism performance is inconsistent. The valve's closing time can not meet specification requirements.
The MSIV actuators need to be hydraulically modified to allow the valves to remain open.

This E&DCR-
The notes on pg 2 need to be expanded. Bolting details need to be revised. Tolerances are required.

INITIATOR	AREA/DEPT DIV	TEL. EXT.	DATE	DATE NEEDED	APPROVED	ENGR RESP
Robert F. Bolte	3E6	7661	10/23/92	10/23/92	J. J. Panchen	XP

PROBLEM SOLUTION

Supersedes E&DCR M10030

Modify MSIV's 2MSS*HYV6A,B,C,D*7A,B,C,D.
Remove all mechanical latching components per note 8 on pg 2 of this E&DCR. Rework hydraulic return header to allow clearance for cylinder removal per pg 12 of this E&DCR. Add new hydraulic system and revise S&W File no. 5.360-180-398 as per pgs 2 thru 14 of this E&DCR. Revise S&W File No's 5.360-180-171 & 191 as per pgs 2 and 10 of 14 of this E&DCR.

ENV. QUAL: YES X NO
SEISMIC QUAL: YES X NO
INTERDISCIPLINE CONCURRENCE: ENGR R. M. Cosgrove; DISCIPLINE NAME M
DATE: 10-23-92
ASME: NON ASME X
CEF REQD: YES NO X

AFFECTED DOCUMENT NUMBERS	TYPE	STATUS
5.360-180-398	M	C
5.360-180-171	M	C
5.360-180-191	M	C
P303D	S	N
C081A	S	N
P301P	S	N
P275D	S	N

STATUS: C - WILL BE INCORPORATED; N - WILL NOT BE INCORPORATED; I - NO CHANGE

RELATED ACTIVITIES: B
QA CAT: I, II
CLIENT APP. REQ'D: X NR; REF: L.O. Thermites; DATE: 10/23/92
ANSWERED BY: Robert F. Bolte; DATE: 10/23/92
RESP LEAD ENGR.: M.A. Fichman; DATE: 10/23/92
MATERIALS ENGR.: D. Kodiyan; DATE: 10/23/92
EQUIP SPEC.: N.R. Lunsford; DATE:
QSD OR EA: TELECON P. Gibson; DATE: 10/23/92
PROJ. ENGR.: TELECON E. Hubbell; DATE: 10/23/92

SUB ITEM	WORK RESP	SUB ITEM	WORK RESP
01	AOD	02	

EQ RELEASE NO: 001.000
EQ RELEASE NO.:
WBS NO: 122.123
WBS NO.:
WORK COMPLETION: NWP ☐ DATE
INSP REPORT NO/SIG: DATE
FINAL WORK TRACKING CLOSURE: DATE

DESCRIPTION: Modification to MSIV actuators
REMARKS: SUPERSEDES E&DCR M10030

NOTES:

5. Tubing and fittings to be installed and field routed per C081A (Cat II).

6. All O-Rings (seals) on equipt. and tube fittings to be EPDM (EPR) on viton unless otherwise specified.

7. Material: Plate - Steel ASTM A36.
   Struc. shapes - Steel ASTM A36.
   "U" bolts - Steel A 36. *
   Bolts - Steel ASTM A307
   Nuts - Steel ASTM A307

8. Remove pivot door, blocking lever, blocking lever support bracket, trip solenoids and all associated hardware. Components to be tagged, boxed and stored.

9. All hydraulic components are Cat II, except SOV A & B which are Cat I.

10. Mechanical components (pump, accumulator, cylinder, etc.) to be installed per reqts. of P275D.

11. Relief valve (RV) shall be set at 1500 psi.

12. An in service leak test shall be performed on the modified hydraulic return header in lieu of a hydrostatic test.

13. Prior to heat up, it shall be verified that the accumulator charge is 825 psi.

14. Pressure switches shall be set so that the jockey pump maintains a hydraulic system pressure of between 1100 psi and 1300 psi.

15. The flow control valve shall be so adjusted as to provide a flow rate of $1^{+.5}_{-.0}$ GPM from the accumulators to the hydraulic system.

WELDING AS FOLLOWS:

W3-01 for Carbon to Carbon

W3-52 for Stainless to Stainless

* ½ U-BOLTS FOR PRESSURE SWITCHES MAY BE FABBED FROM ALL-THREAD ROD A-36 OR EQUIV.

CALCULATION SHEET

CALCULATION IDENTIFICATION NUMBER				
J.O. OR W.O. NO.	DIVISION & GROUP	CALCULATION NO.	OPTIONAL TASK CODE	PAGE ___
12177.92	EMD/MECH	MS-2121		

HYDRAULIC CIRCUIT

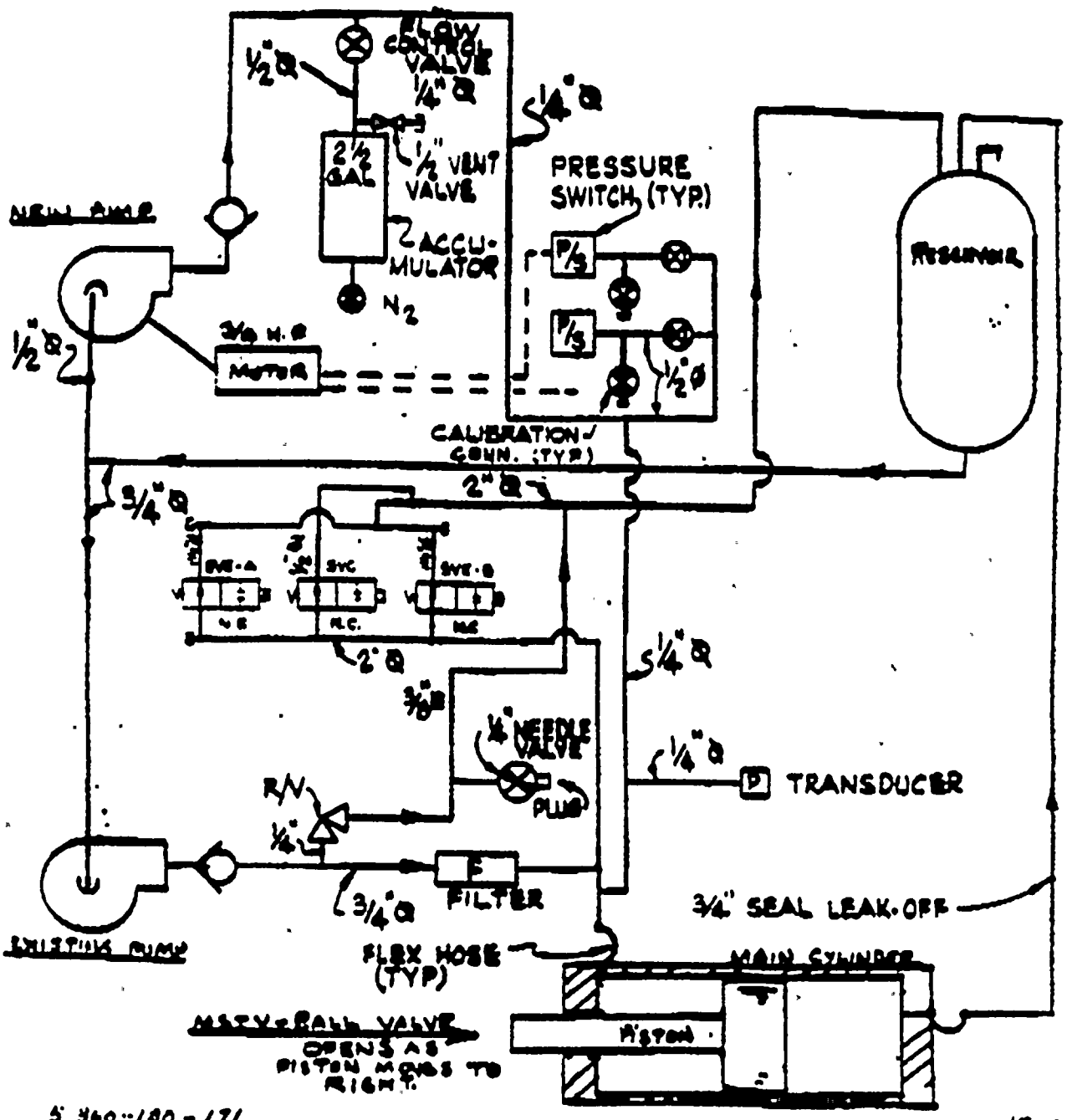

5. 360-180-171
5. 360-180-191
5. 360-180-398

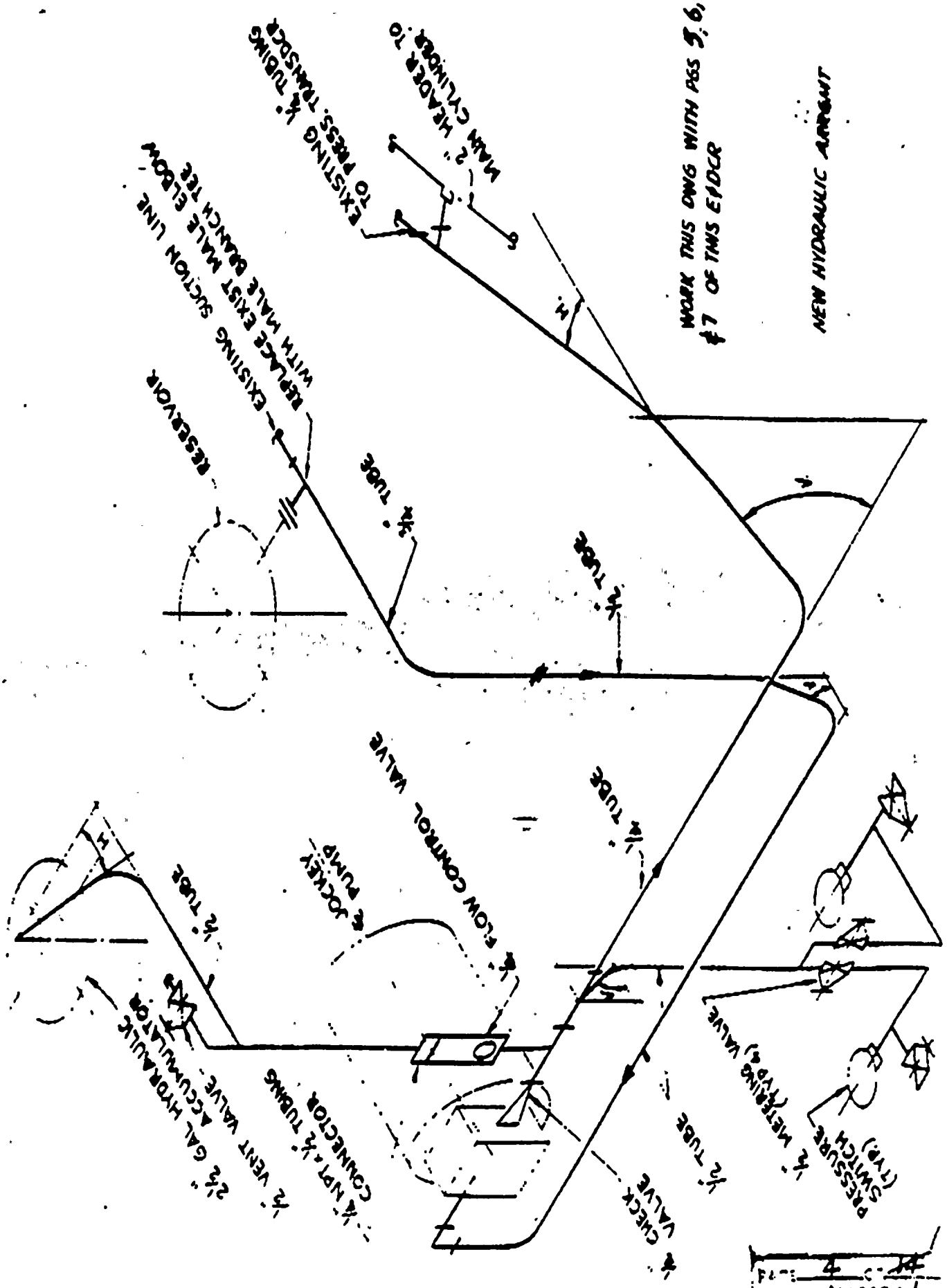
WORK THIS DWG WITH PGS 5, 6, & 7 OF THIS E/DCR
NEW HYDRAULIC ARRANGMT
2" HEADER TO MAIN CYLINDER
EXISTING ¼" TUBING TO PRESS. TRANSDCR
REPLACE EXIST MALE ELBOW WITH MALE BRANCH TEE
EXISTING SUCTION LINE
RESERVOIR
¼" TUBE
¼" TUBE
FLOW CONTROL VALVE
¼" TUBE
JOCKEY PUMP
¼" TUBE
¼" TUBE
¼" METERING VALVE
PRESSURE SWITCH (TYP)
¼" TUBE
CHECK VALVE
¼" NPT x ¼" TUBING CONNECTOR
¼" VENT VALVE
2½" GAL HYDRAULIC ACCUMULATOR

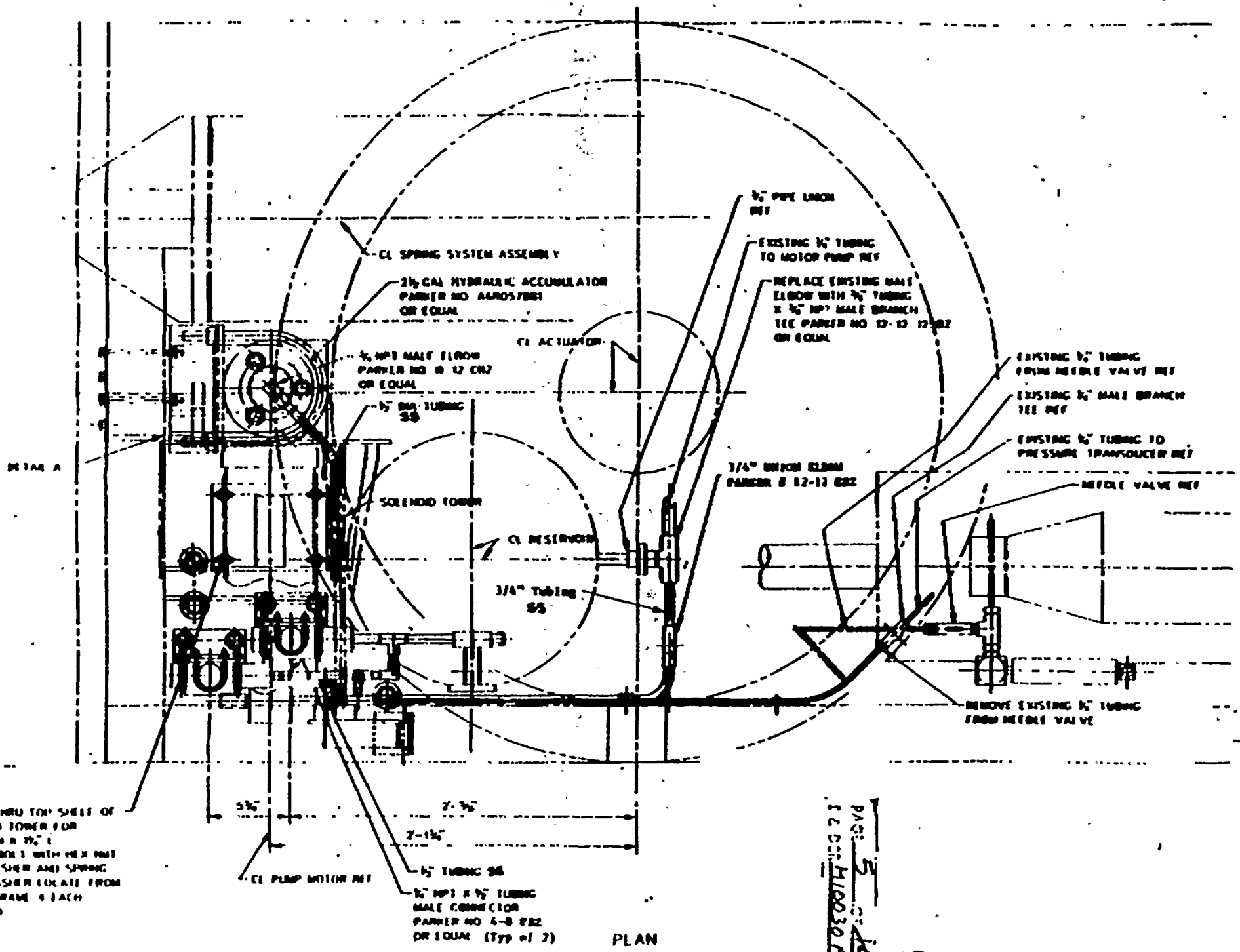

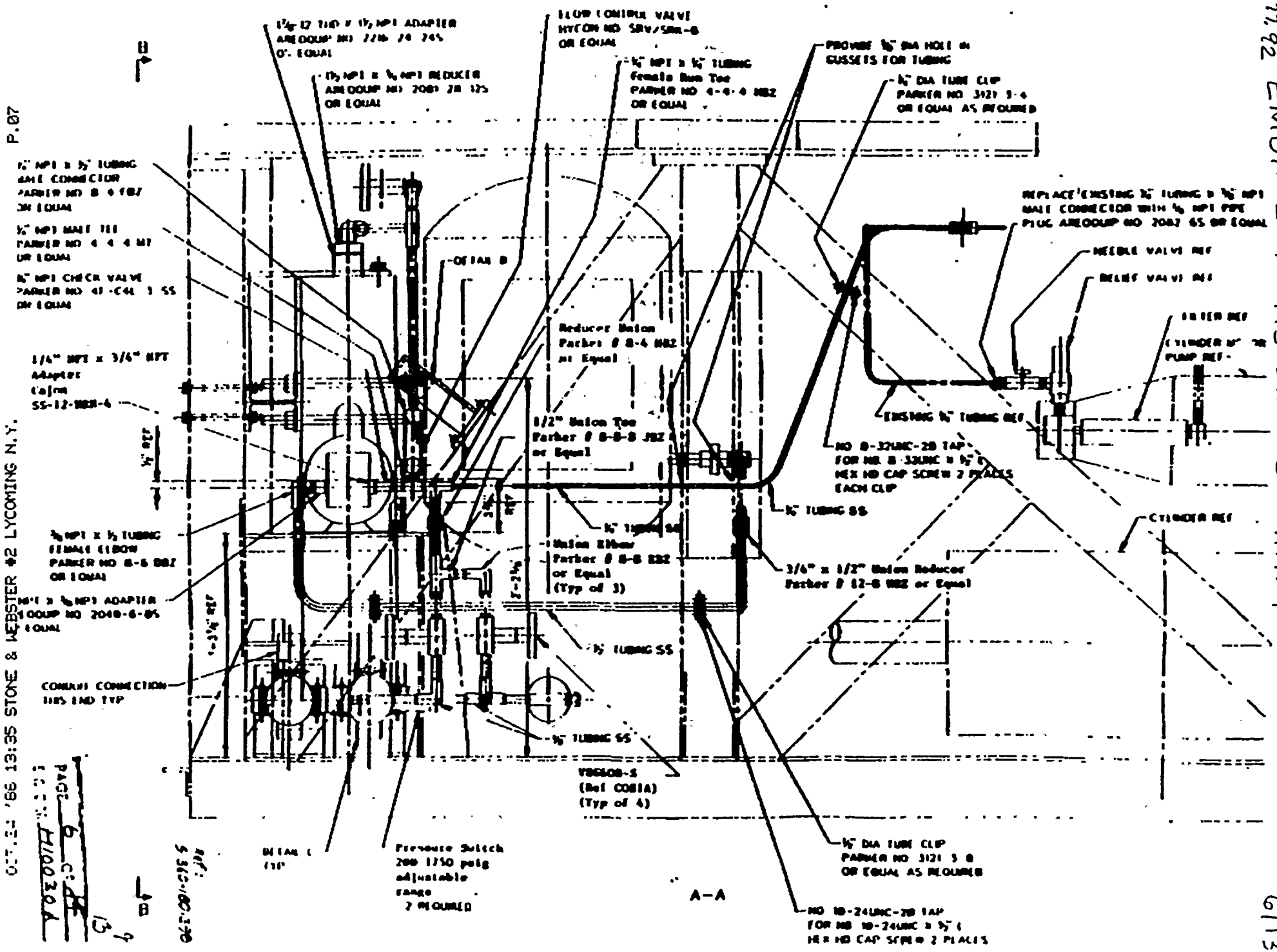
FLOW CONTROL VALVE
HYCON NO SRV/SRM-8
OR EQUAL
PROVIDE 1/8" DIA HOLE IN
GUSSETS FOR TUBING
1/4" DIA TUBE CLIP
PARKER NO 3121 3-4
OR EQUAL AS REQUIRED
1/4" NPT x 1/4" TUBING
Female Run Tee
PARKER NO 4-4-4 HBZ
OR EQUAL
1/4" NPT x 1/4" REDUCER
AREOQUIP NO 2081 28 125
OR EQUAL
1/4" NPT x 1/2" TUBING
MALE CONNECTOR
PARKER NO 8 4 FBZ
OR EQUAL
1/4" NPT MALE TEE
PARKER NO 4 4 4 MT
OR EQUAL
1/4" NPT CHECK VALVE
PARKER NO 41-C4L 3 SS
OR EQUAL
1/4" NPT x 3/4" NPT
Adapter
Cajon
SS-12-HBR-4
Reducer Union
Parker # 8-4 HBZ
or Equal
1/2" Union Tee
Parker # 8-8-8 HBZ
or Equal
1/4" TUBING SS
Union Elbow
Parker # 8-8 HBZ
or Equal
(Typ of 3)
1/4" TUBING SS
1/4" TUBING SS
1/4" TUBING SS
1/4" NPT x 1/2 TUBING
FEMALE ELBOW
PARKER NO 8-6 HBZ
OR EQUAL
1/4" NPT x 1/4" ADAPTER
AREOQUIP NO 2048-6-8S
EQUAL
CONDUIT CONNECTION
HBS END TYP
REPLACE EXISTING 1/4" TUBING & 1/4" NPT
MALE CONNECTOR WITH 1/4 NPT PIPE
PLUG AREOQUIP NO 2082 6S OR EQUAL
NEEDLE VALVE REF
RELIEF VALVE REF
FILTER REF
CYLINDER OR PUMP REF
EXISTING 1/4" TUBING REF
NO 8-32UNC-2B TAP
FOR NO 8-32UNC x 1/2"
HEX HD CAP SCREW 2 PLACES
EACH CLIP
1/4" TUBING SS
CYLINDER REF
3/4" x 1/2" Union Reducer
Parker # 12-8 HBZ or Equal
VBS60B-S
(Ref COBIA)
(Typ of 4)
1/4" DIA TUBE CLIP
PARKER NO 3121 3 8
OR EQUAL AS REQUIRED
NO 10-24UNC-2B TAP
FOR NO 10-24UNC x 1/2"
HEX HD CAP SCREW 2 PLACES
Pressure Switch
200 1750 psig
adjustable
range
2 REQUIRED
A-A
B
B

• 1-0

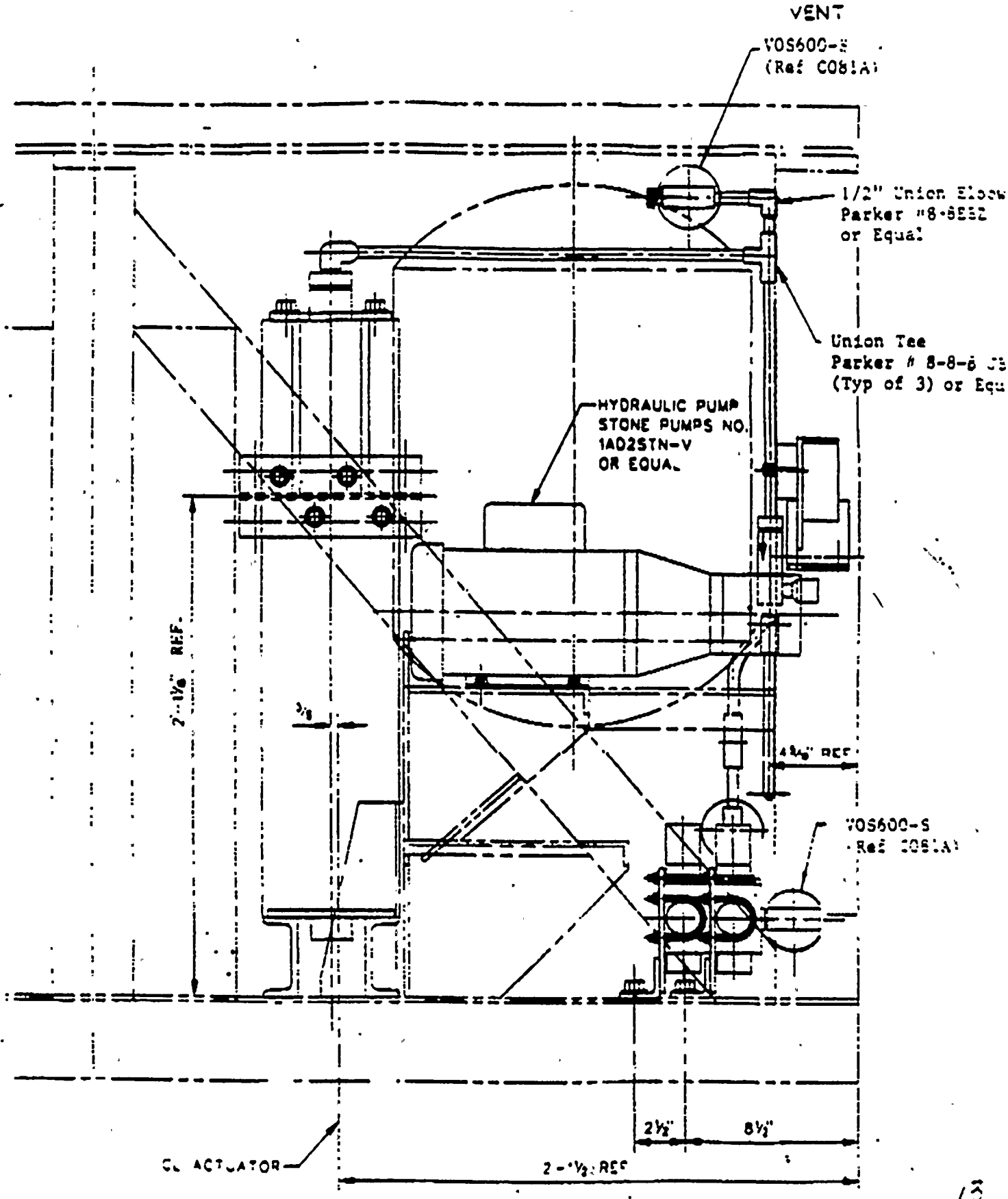
VENT
VOS600-S
(Ref C081A)
1/2" Union Elbow
Parker #8-8E32
or Equal
Union Tee
Parker # 8-8-8 JS
(Typ of 3) or Equ
HYDRAULIC PUMP
STONE PUMPS NO.
1AD2STN-V
OR EQUAL
2'-1⅛" REF.
3/8
4¾" REF.
VOS600-S
(Ref C081A)
2½"
8½"
2'-1½" REF
CL ACTUATOR

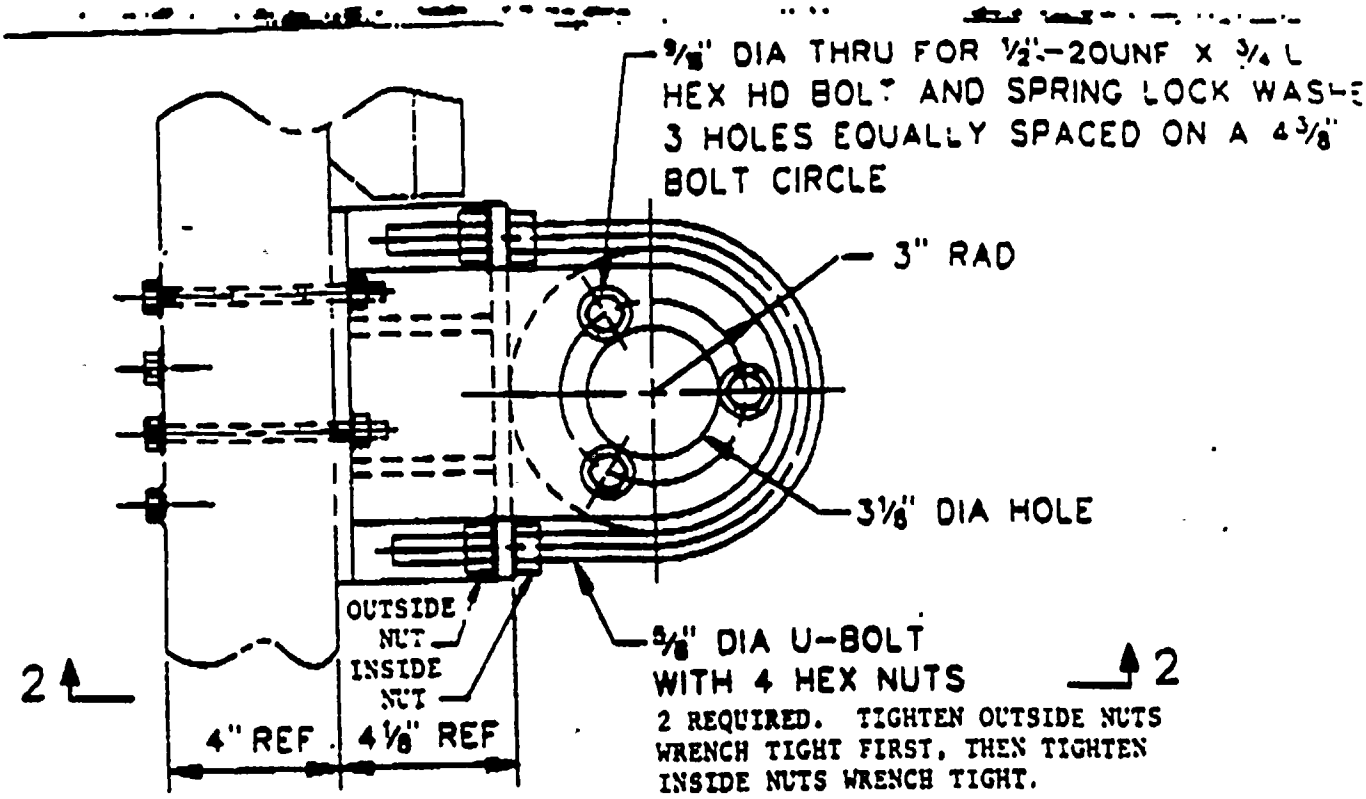

DETAIL A

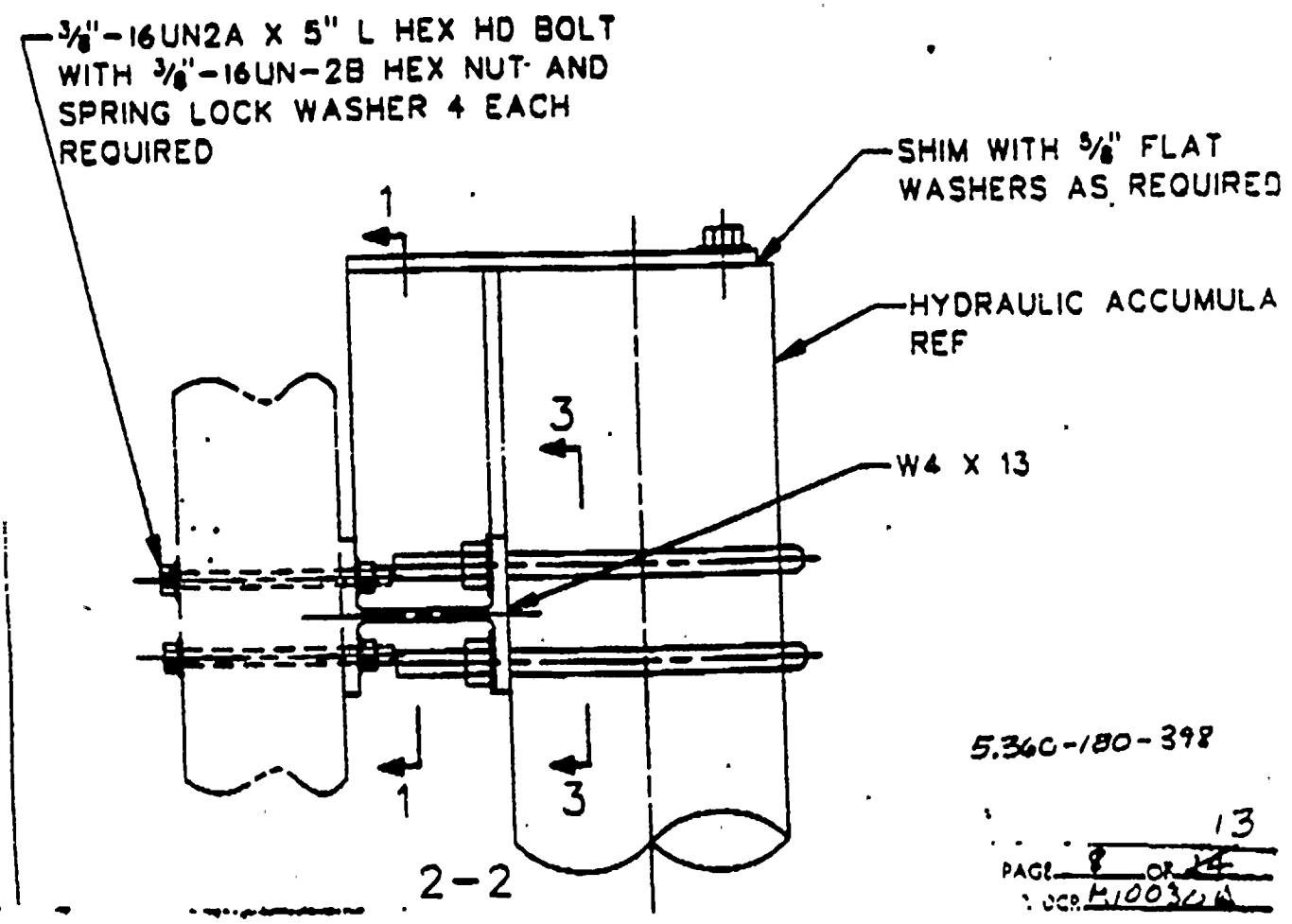

2-2

5.360-180-398

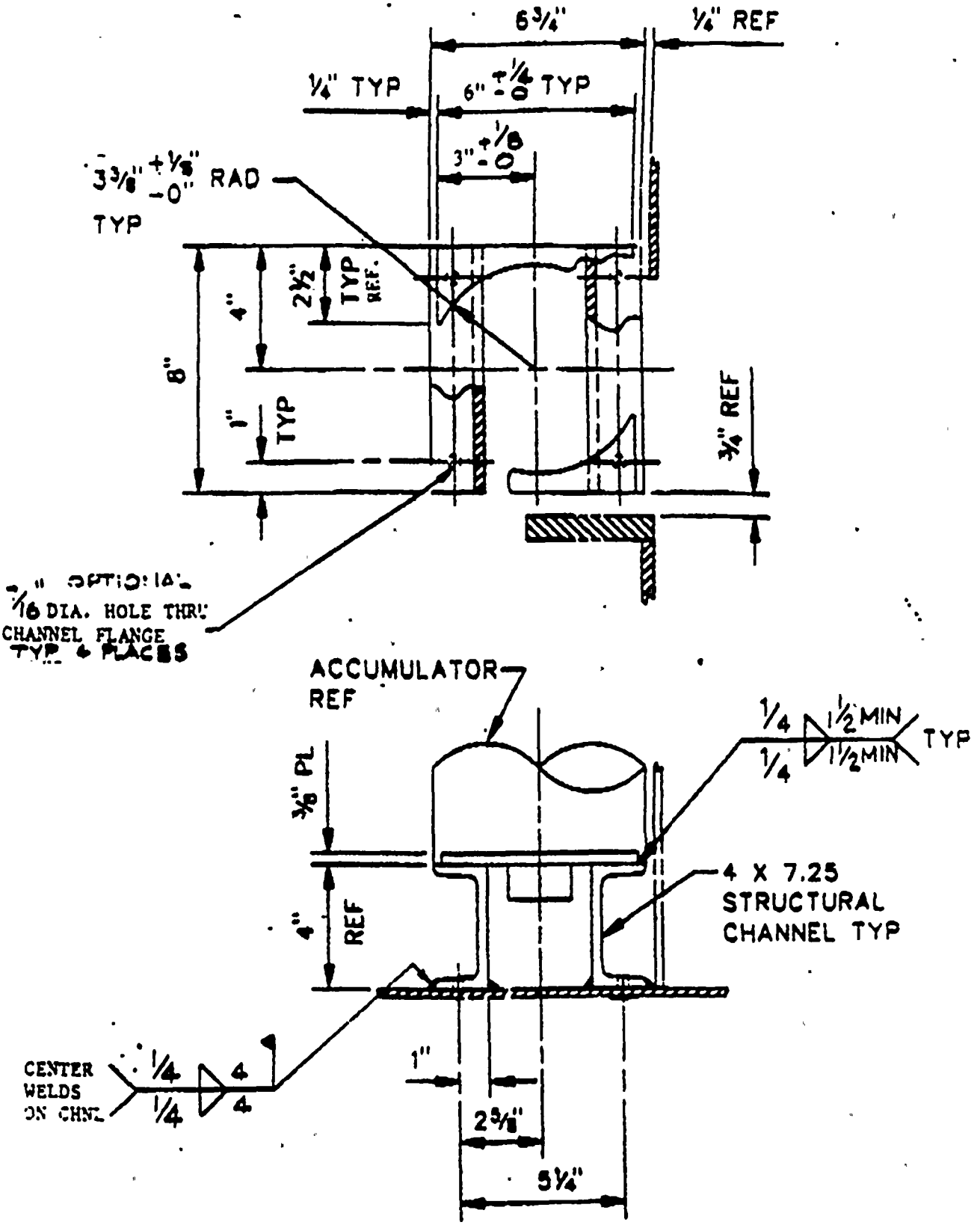

DETAIL B

5 360-IEC-398

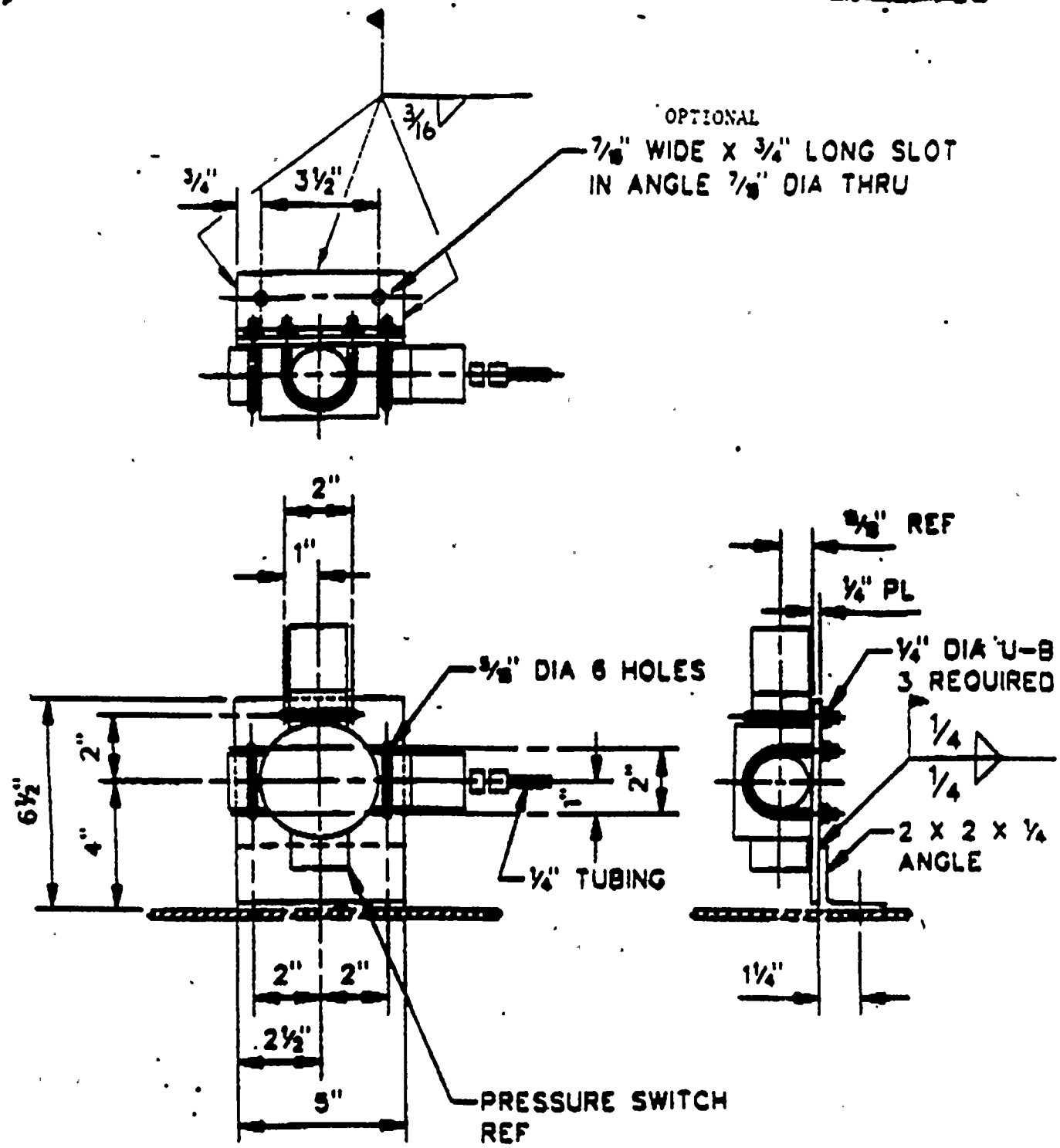

DETAIL C

2 REQUIRED

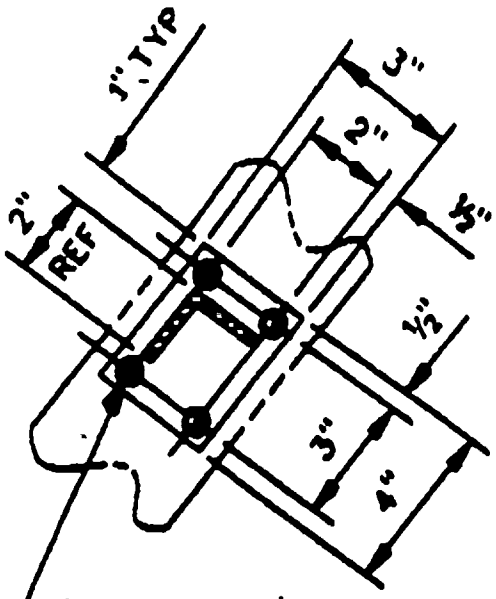

5/8" DIA HOLE THRU PLATE
1/4"-20UNC TAP THRU STRL TUBING AT ASSEMBLY FOR 1/4"-20UNC X 1" L HEX HD CAP SCREW WITH SPRING LOCK WASHER 4 EACH REQUIRED

4-4

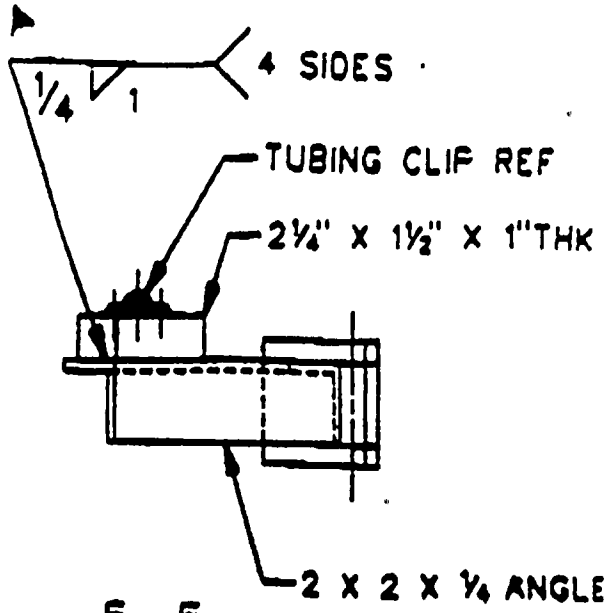

5-5

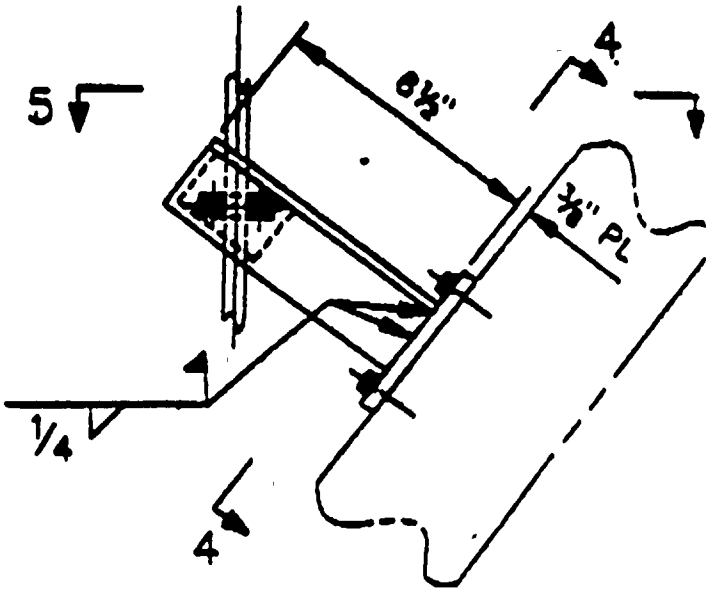

DETAIL D

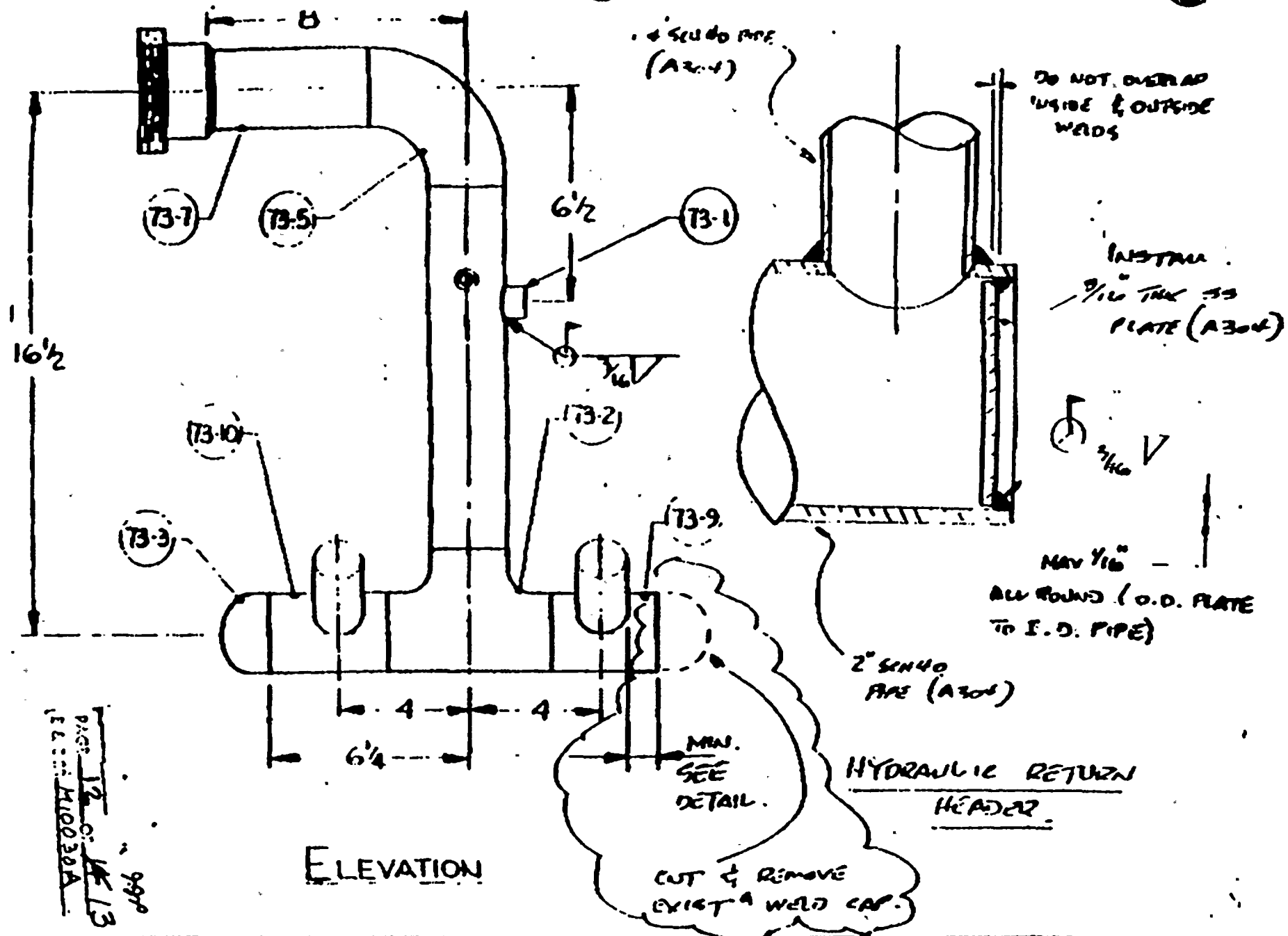

HYDRAULIC RETURN HEADER

ELEVATION

TOLERANCES	FEATURE CONTROL SYMBOLS PER ANSI Y14.5	FINISHES
ANGLES ± 1°		UNLESS OTHERWISE SPECIFIED
FRACTIONS ± 1/64		
XX ± .010		

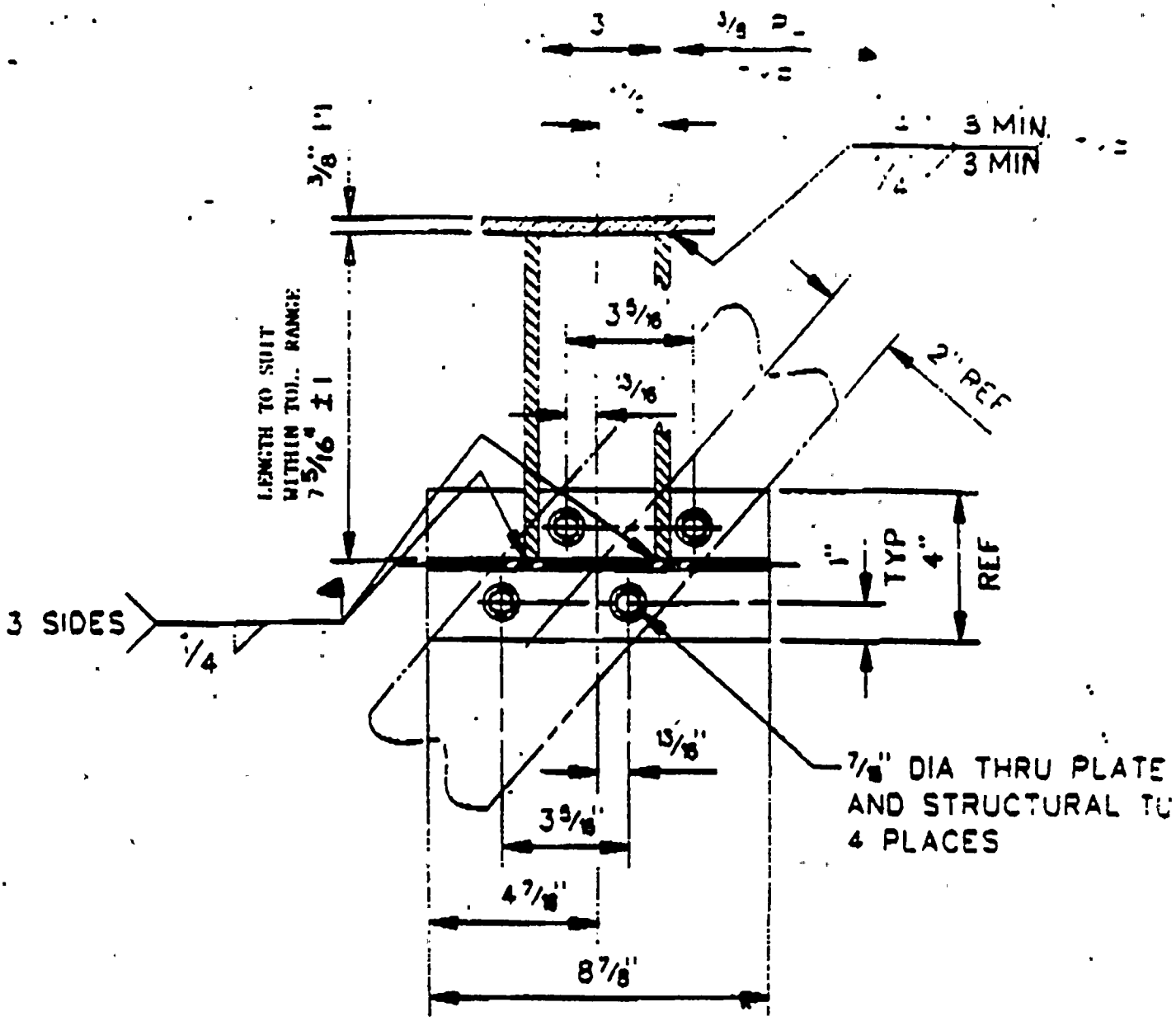
3
3/8
3/8"
3 MIN.
3 MIN
LENGTH TO SUIT
WITHIN TOL. RANGE
7 5/16" ± 1
3 5/16
13/16
2" REF
1"
TYP
4"
REF
3 SIDES
1/4
13/16"
7/8" DIA THRU PLATE
AND STRUCTURAL TU
4 PLACES
3 5/16"
4 7/16"
8 7/8"

1—1

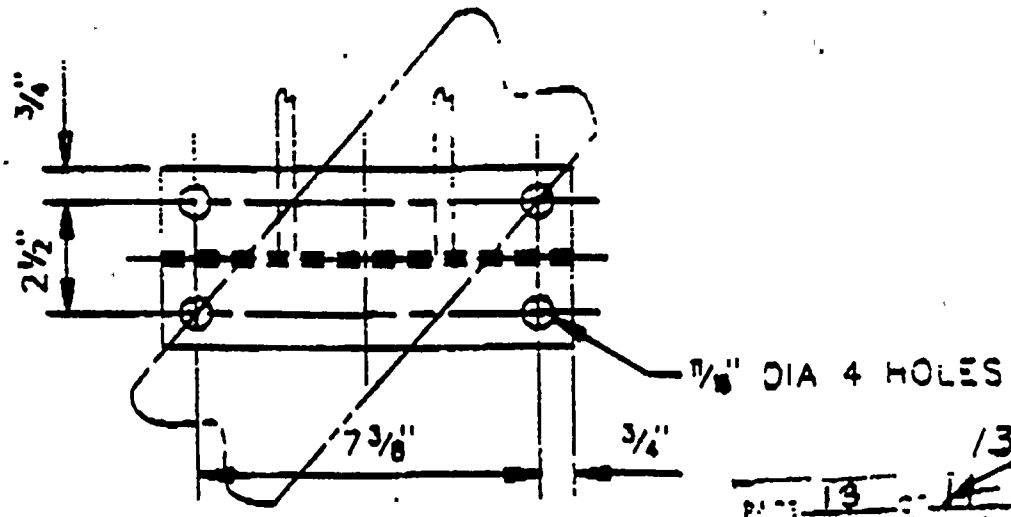
3/4"
2 1/2"
7/8" DIA 4 HOLES
7 3/8"
3/4"

13 9

12177.92 EMD/MECH MS-2122-0 ATT 2 1/7

STONE AND WEBSTER ENGINEERING CORPORATION

ENGINEERING & DESIGN COORDINATION REPORT

PAGE 1 OF 7

E & DCR NO. M10030 B

PROJECT/CLIENT: NINE MILE POINT NUCLEAR STATION — UNIT 2 NIAGARA MOHAWK POWER CORPORATION

JOB ORDER NO: 12177

P.O. NO (S&W): P303D

REASON CODE (S): E, V

EQUIP I.D. NO. (S)/SYS CODE (S): 2MSS*HYV6A,B,C,D & 7A,B,C,D / 2MSS / 001.000

REFERENCE DOCUMENTS: E&DCR M10030A

SUPPLIER (OR SUBSUPPLIER) NAME: ENERGY PRODUCTS GROUP

DESCRIPTION SUMMARY: MOD. PN2Y86MX118 TO MSIV ACTUATORS

REMARKS: REVISE E&DCR M10030A

PROBLEM DESCRIPTION

AREA 1 / REACTOR [PN2Y86MX118]

THE FOLLOWING INTERFERENCES HAVE BEEN IDENTIFIED IN THE MSIV ACTUATOR MODIFICATIONS IDENTIFIED IN E&DCR M10030A:

1. SLIDE ON SPRING SYSTEM ASSEMBLY WILL INTERFERE W/ THE ACCUMULATOR U-BOLTS WHEN VALVE IS IN THE FULL OPEN POSITION. (SEE PG. 2 OF THIS E&DCR).
2. COVER R. ON ONE OF THE PRESSURE SWITCHES CANNOT BE REMOVED BECAUSE OF DIAG. TUBE STEEL. (SEE PG. 2 OF THIS E&DCR).
3. BECAUSE OF PROXIMITY OF THE SPRING SYSTEM ASSEMBLY, THE WELD OF ACCUMULATOR CHNL TO ACTUATOR BASE (DETAIL B) CAN NOT BE CENTERED. REQUEST TO OFFSET WELD ≈ 1".
4. SHIM SIZE SHOWN IN SECT. E-E IN NOT ADEQUATE TO ALLOW BOLTING OF TUBING CLIP AS SHOWN ON PG. 11 OF E&DCR M10030A.

INITIATOR	AREA/DEPT DIV	TEL. EXT	DATE	DATE NEEDED BY	APPROVED	ENGR. RESP.
R.T. Cousins	S&G	2563	10-25-86	10-25-86	G	XN, XP

PROBLEM SOLUTION

(REVISE E&DCR M10030A) 10-25-86

1. REVISE ACCUMULATOR MOUNTING BRACKET AS SHOWN ON POS. 5 & 6 OF THE E&DCR.
2. REVISE PRESSURE SWITCH MOUNTING BRACKET FOR THE IDENTIFIED SWITCH AS SHOWN ON PG. 3 OF THIS E&DCR.
3. CHANNEL ATTACHED WELD DTL SHALL BE REVISED AS SHOWN ON PG. 4 OF THIS E&DCR.
4. REVISE SHIM BLOCK DIMENSIONS & WELDING IN SECT. 5-5 AS SHOWN ON PG. 7 OF THIS E&DCR.

PREP: 10-25-86

ENVIR QUAL: YES ☒ NO ☐

SEISMIC QUAL: YES ☒ NO ☐

INTERDISCIPLINE CONCURRENCE: DISCIPLINE NR; ENGR; DATE

ASME ☐ NON ASME ☒

CEP REQ'D: YES ☐ NO ☒

AFFECTED DOCUMENT NUMBERS	TYPE	STATUS
5,360-180-398	M	C
~~5,360-180-111~~	~~M~~	~~C~~
5,360-180-191	M	C
P303D	S	N
C081A	S	N
P501P	S	N
~~P303D~~	~~S~~	~~N~~
~~C081A~~	~~S~~	~~N~~

C - WILL BE INCORPORATED
N - WILL NOT BE INCORPORATED
I - NO CHANGE

RELATED ACTIVITIES: B

QA CAT: I, II

ANSWERED BY: R.T. Cousins; DATE: 10-25-86

RESP. LEAD ENGR.; DATE

MATERIALS ENGR.; DATE

EQUIP. SPEC.; DATE

QSS OR EA; DATE

PROJ. ENGR.; DATE

CLIENT APP. REQ'D ☒ NR ☐; RESP.; DATE

SUB ITEM 01 WORK RESP. AOD; SUB ITEM 02 WORK RESP.

EQ RELEASE NO. 001.000; EQ RELEASE NO.

WSS NO. 100, 123; WSS NO.

WORK COMPLETION; NWR ☐; DATE

INSP. REPORT NO/SIG; DATE

FINAL WORK TRACKING CLOSURE; DATE

DESCRIPTION (01): MODIFICATION PN2Y86MX118 TO MSIV ACTUATORS

REMARKS (01): REVISE E&DCR M10030A

DESCRIPTION (02):

REMARKS (02): PN2Y86MX118 NCR# 16734

OCT. 27 '86 10:13 STONE & WEBSTER #2 LYCOMING N.Y. P.18

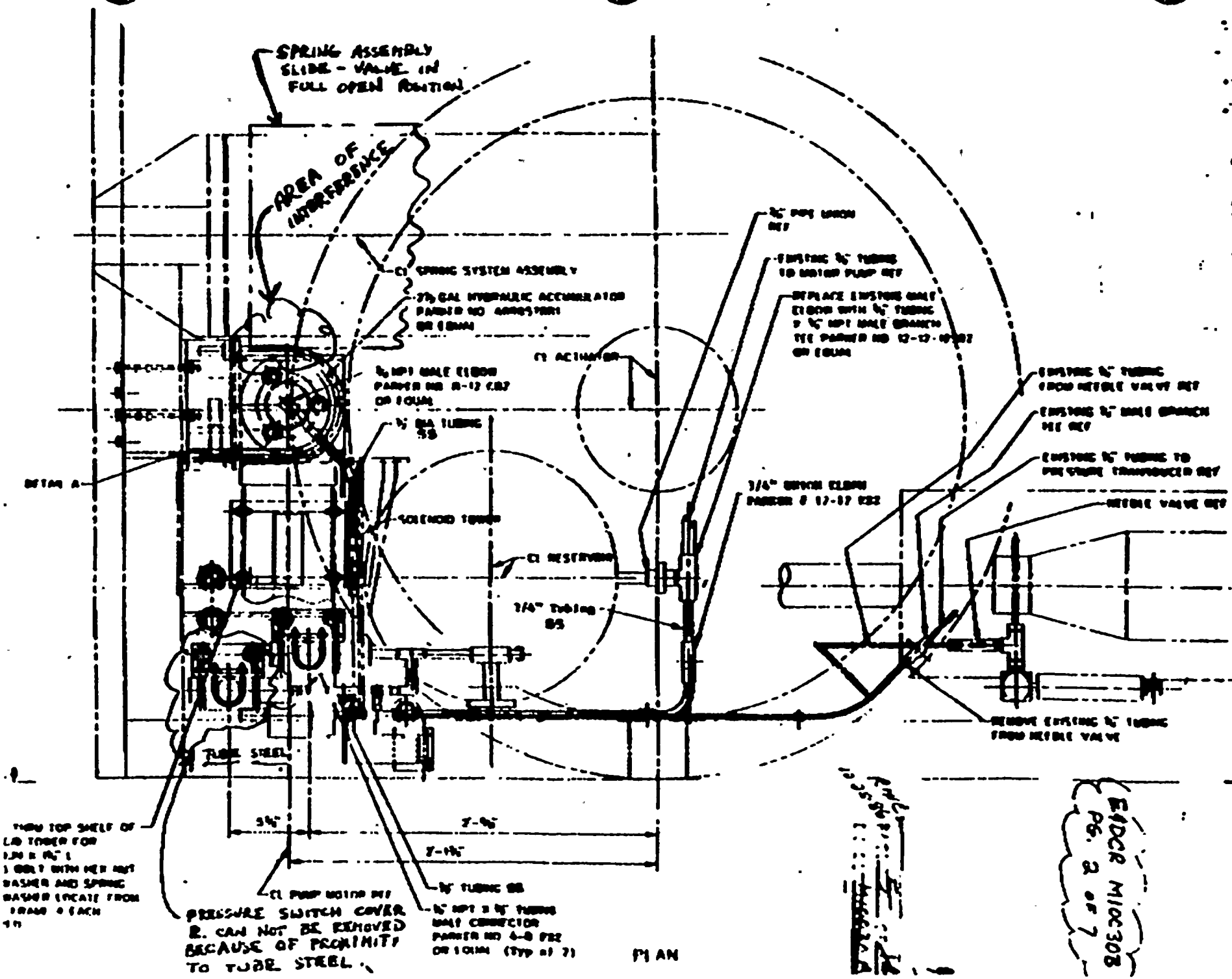

E&DCR M10030B
Pg. 3 of 7

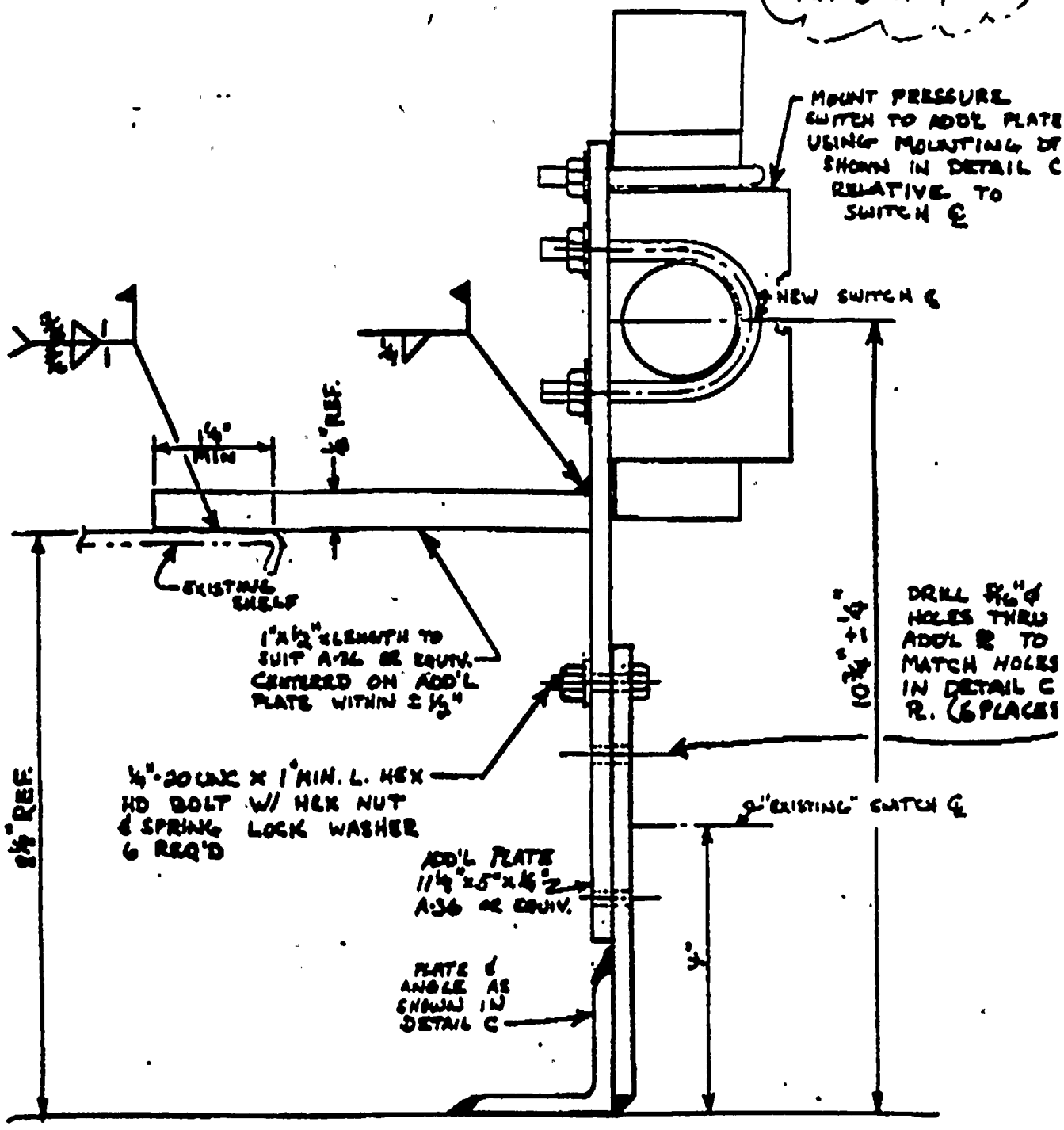

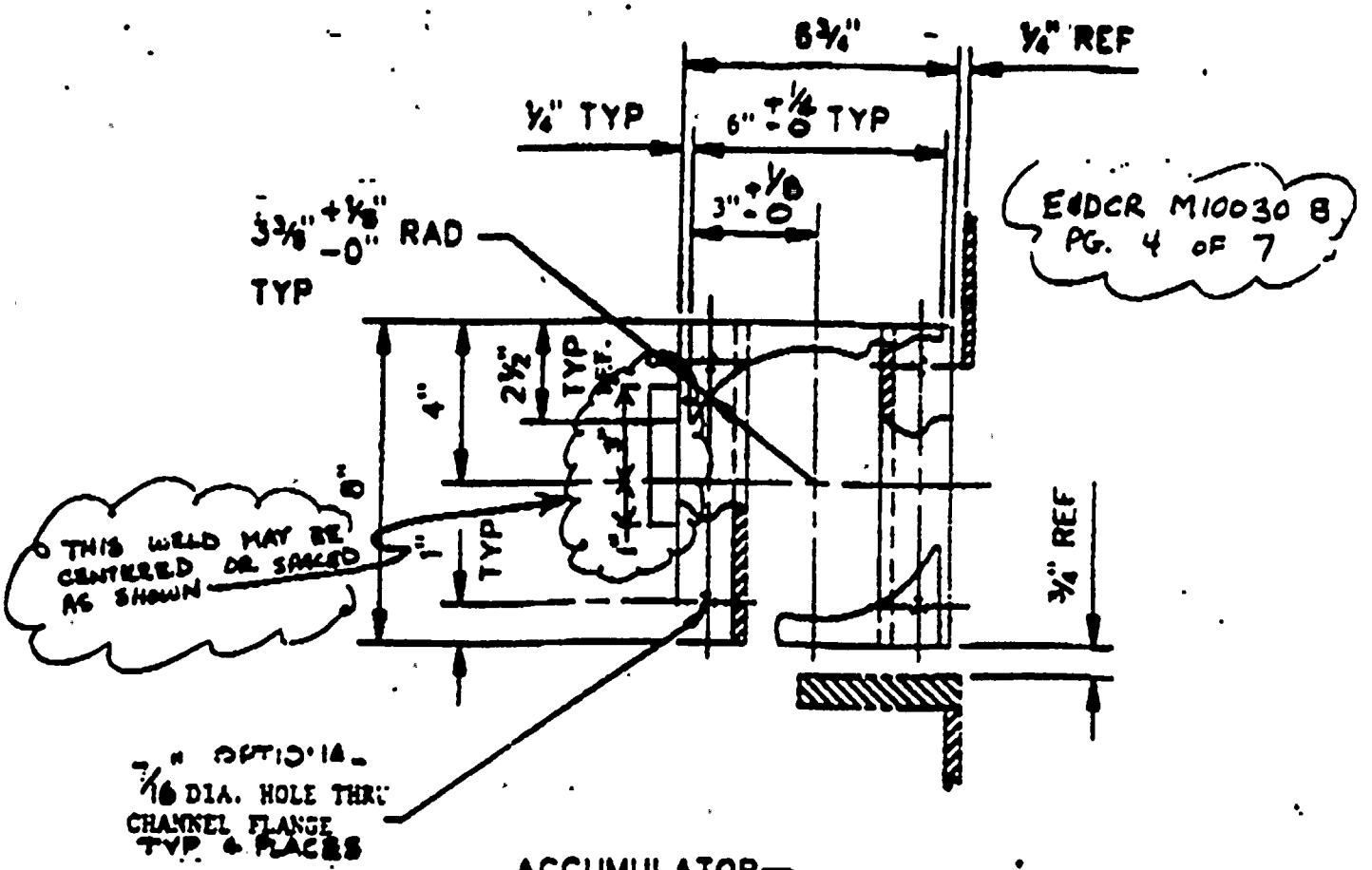
6¾"
¼" REF
¼" TYP
6" +¼ -0 TYP
3" +⅛ -0
3⅜" +⅛" -0" RAD TYP
E&DCR M10030 B PG. 4 OF 7
4"
2½" TYP
8"
THIS WELD MAY BE CENTERED OR SAGGED AS SHOWN
TYP
¾" REF
7/16 DIA. HOLE THRU CHANNEL FLANGE TYP 4 PLACES

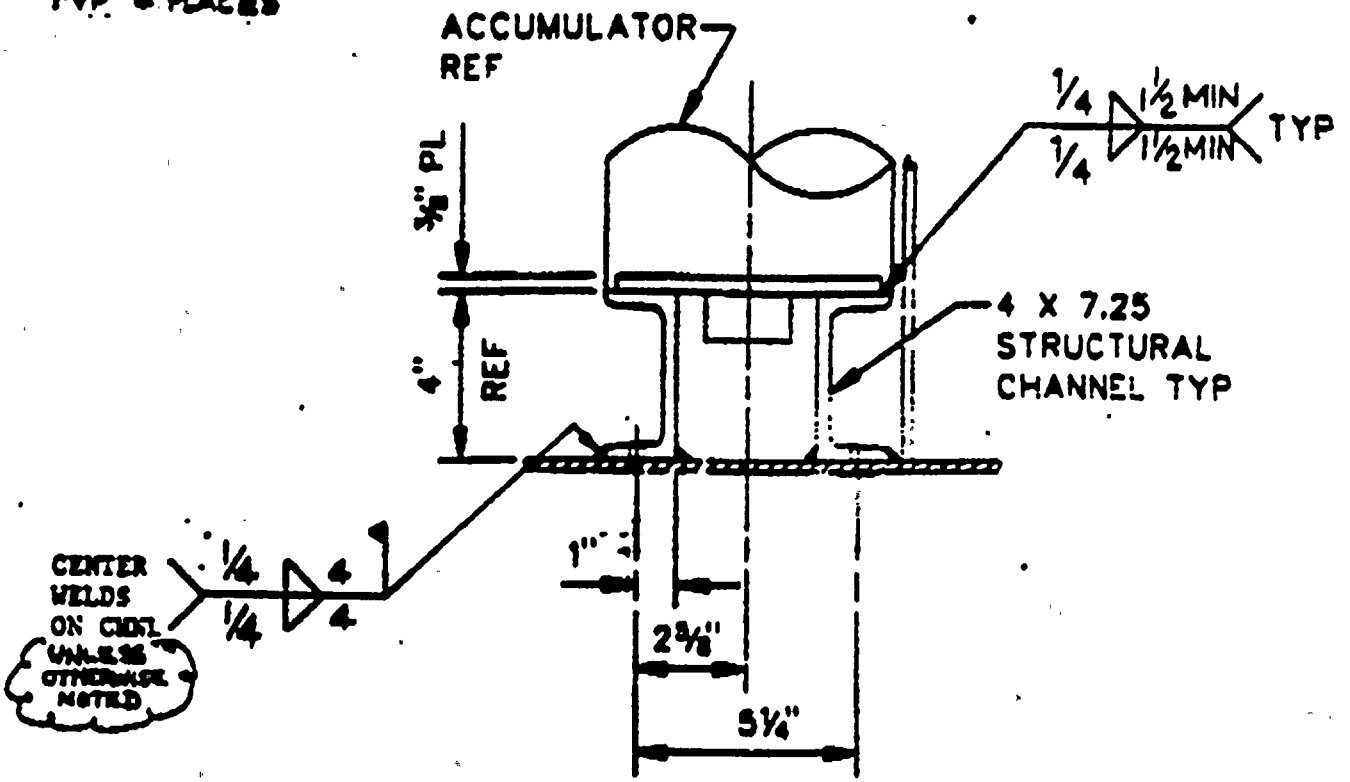
ACCUMULATOR REF
¼ 1½ MIN
¼ 1½ MIN
TYP
⅜" PL
4" REF
4 X 7.25 STRUCTURAL CHANNEL TYP
CENTER WELDS ON CHNL UNLESS OTHERWISE NOTED
¼ 4
¼ 4
1"
2⅜"
5¼"

DETAIL B

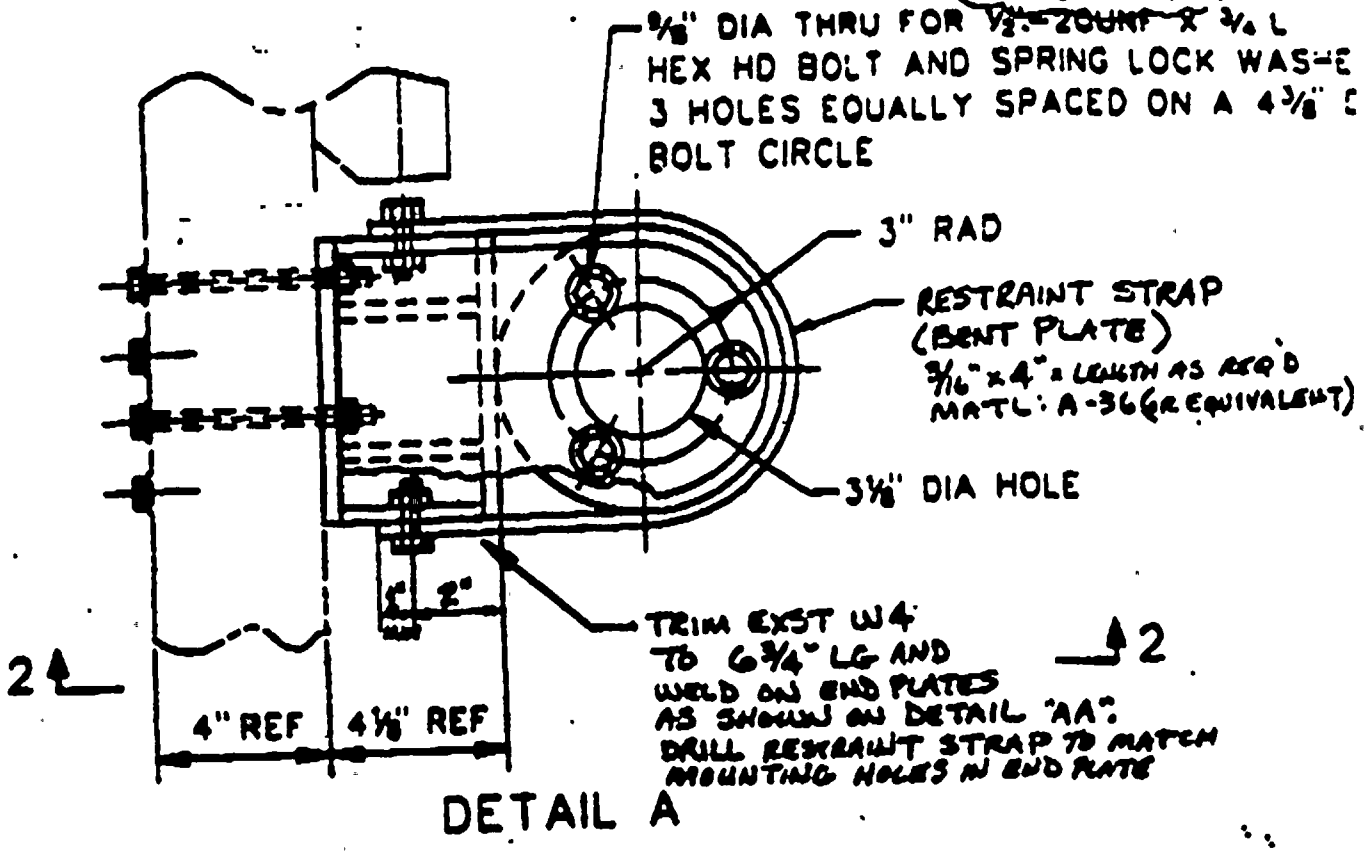
9/16" DIA THRU FOR ~~1/2"-20UNF X~~ 3/4 L
HEX HD BOLT AND SPRING LOCK WASHE
3 HOLES EQUALLY SPACED ON A 4 3/8" D
BOLT CIRCLE
3" RAD
RESTRAINT STRAP
(BENT PLATE)
3/16" x 4" x LENGTH AS REQ'D
MATL: A-36 (OR EQUIVALENT)
3 1/8" DIA HOLE
2"
2"
TRIM EXST W4
TO 6 3/4" LG AND
WELD ON END PLATES
AS SHOWN ON DETAIL "AA".
DRILL RESTRAINT STRAP TO MATCH
MOUNTING HOLES IN END PLATE
2
2
4" REF
4 1/8" REF

DETAIL A

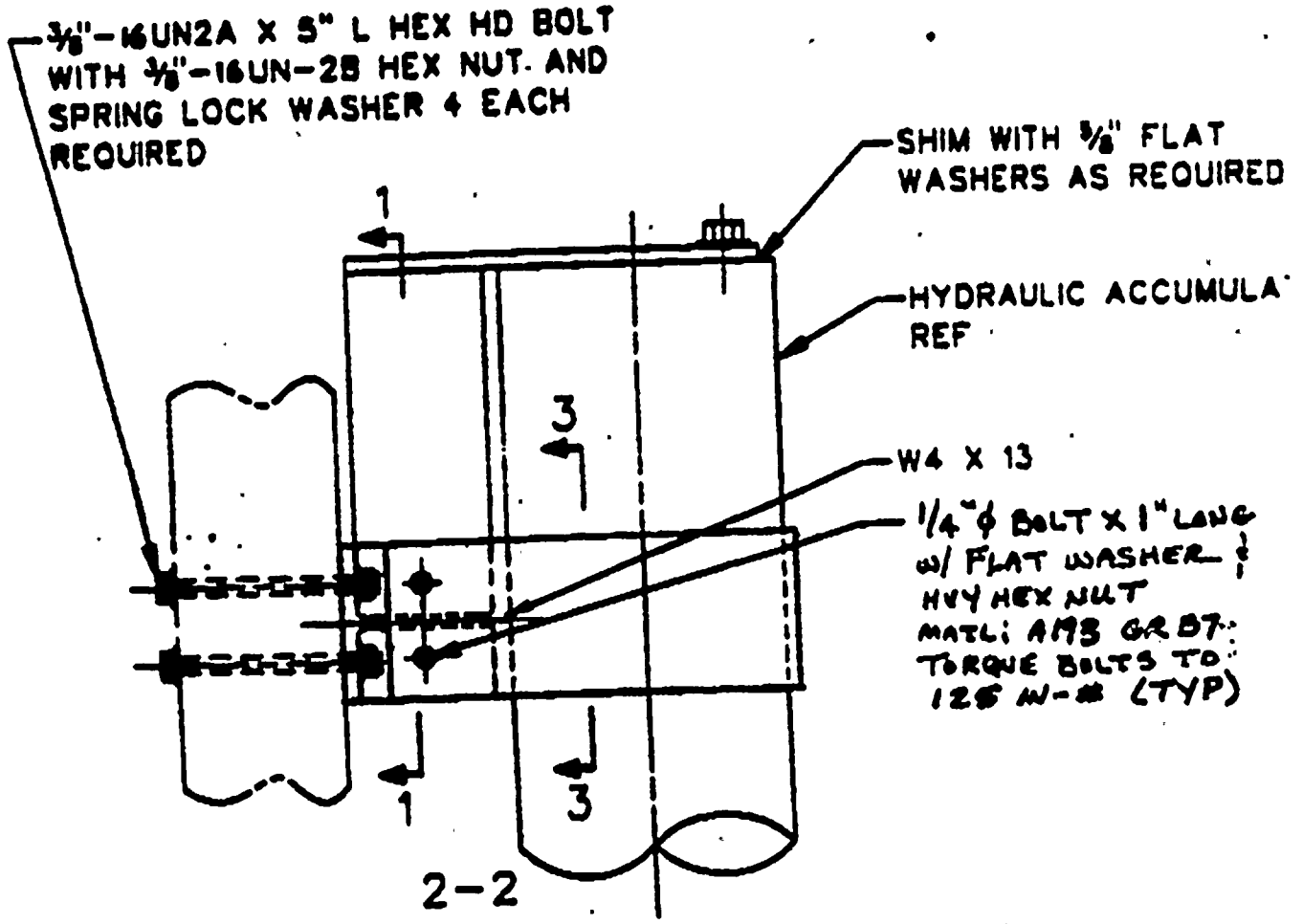
3/8"-16UN2A X 5" L HEX HD BOLT
WITH 3/8"-16UN-2B HEX NUT AND
SPRING LOCK WASHER 4 EACH
REQUIRED
SHIM WITH 3/8" FLAT
WASHERS AS REQUIRED
HYDRAULIC ACCUMULA
REF
W4 X 13
1/4"ϕ BOLT X 1" LONG
W/ FLAT WASHER &
HVY HEX NUT
MATL: A193 GR B7
TORQUE BOLTS TO
125 IN-#
(TYP)
1
1
3
3

2-2

CALCULATION SHEET

E&DCR M10030B H
PG. 6 OF 7

CALCULATION IDENTIFICATION NUMBER				
J.O. OR W.O. NO. RAW/10-28-86	DIVISION & GROUP	CALCULATION NO.	OPTIONAL TASK CODE	PAGE ___

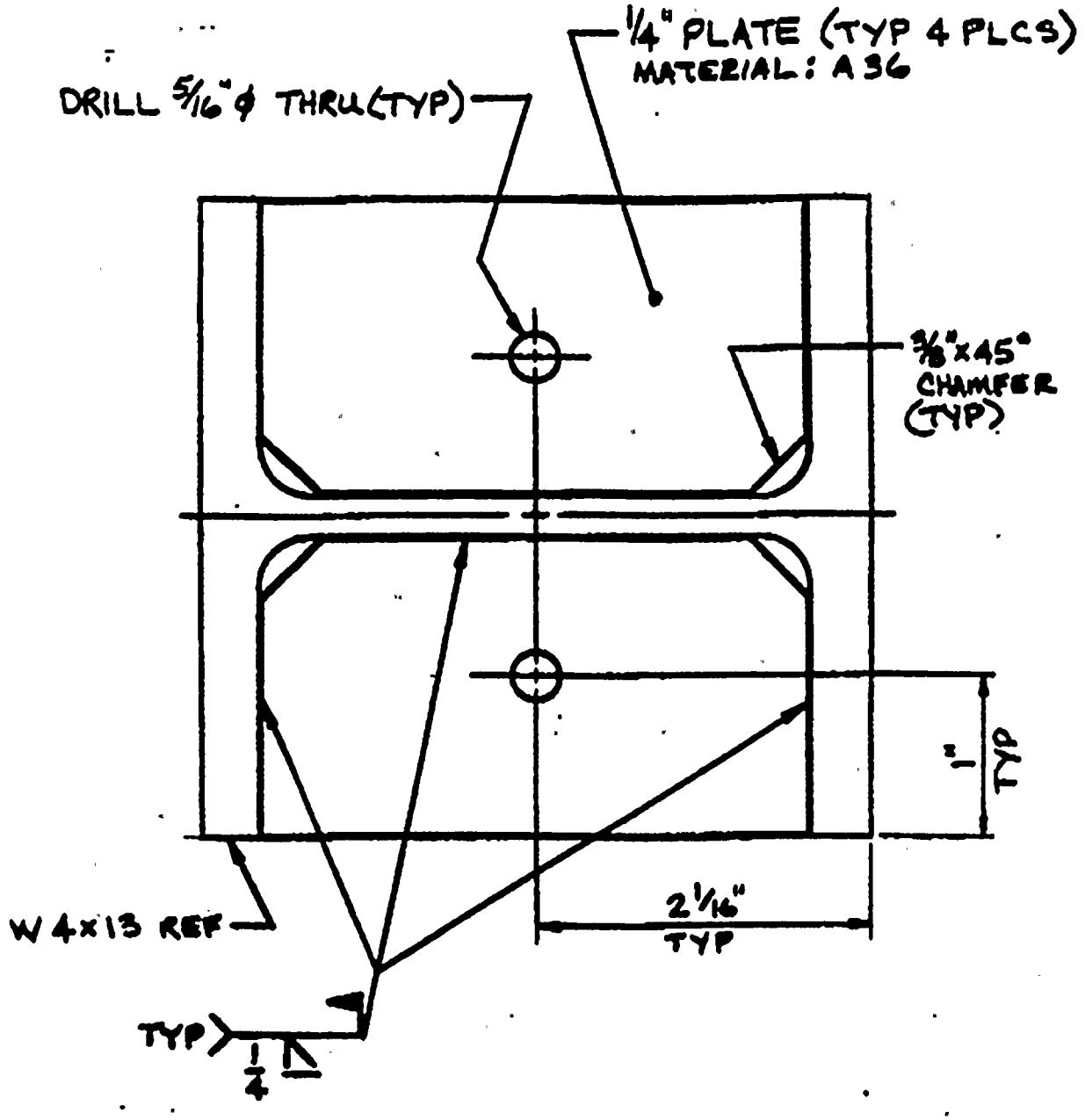

DETAIL "AA"

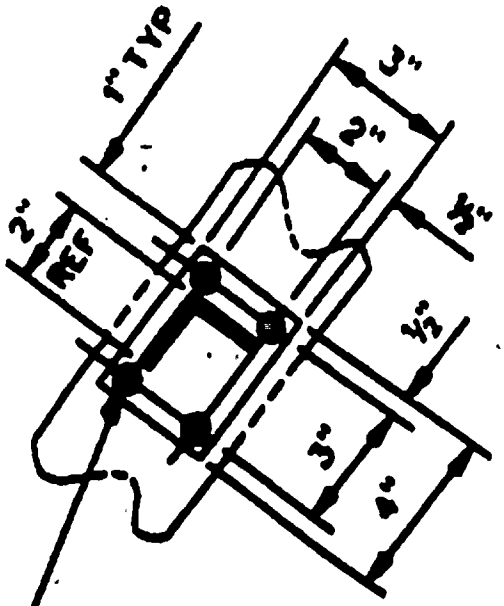

9/16" DIA HOLE THRU PLATE 1/4"-20UNC TAP THRU STRL TUBING AT ASSEMBLY FOR 1/4"-20UNC X 1" L HEX HD CAP SCREW WITH SPRING LOCK WASHER 4 EACH REQUIRED

4-4

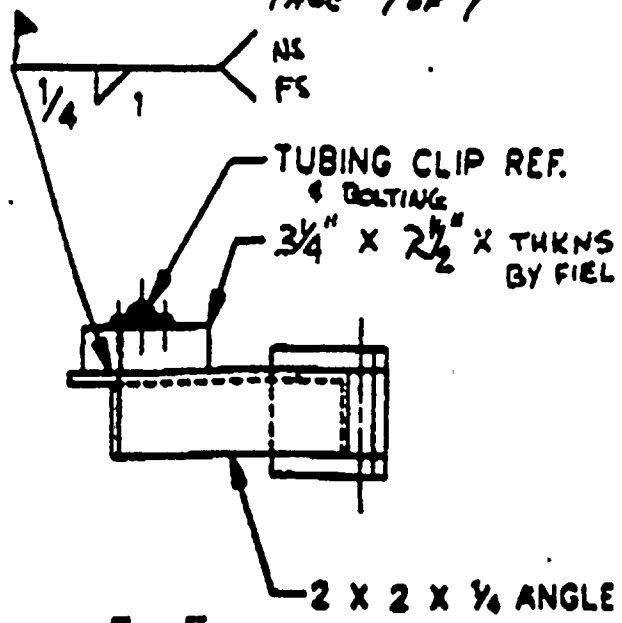

5-5

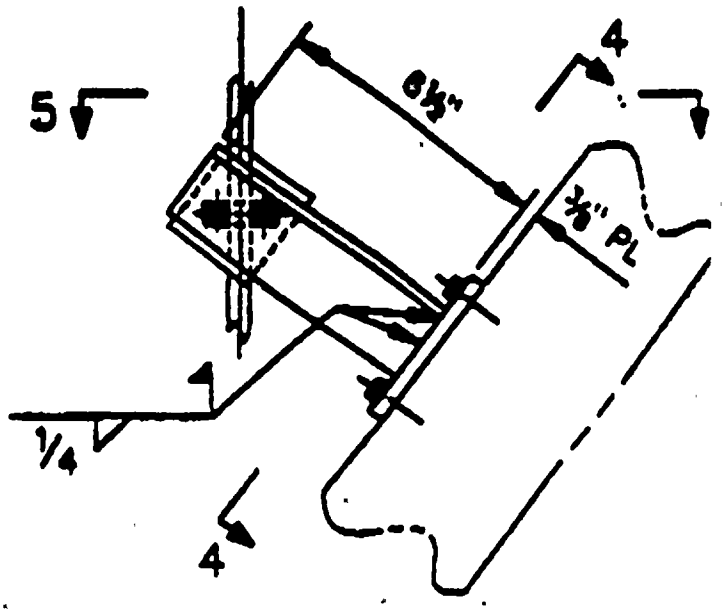

DETAIL D

EIDCR No. M10030 B
PAGE 7 OF 7

Description of Reference 4

"Cycle Times for MSIV Actuators", Crosby Test Report No. 4330, Revision 2, dated November 10, 1986.

This report describes testing performed on the full size actuator at Crosby Valve over the period from August 1986 through October 27, 1986. It describes the test actuator configuration, discusses the developmental testing performed, and summarizes the testing results using the final SOV O-ring materials.