STONE & WEBSTER ENGINEERING CORPORATION

CALCULATION TITLE PAGE

*SEE INSTRUCTIONS ON REVERSE SIDE

5010.64 (FRONT)

CLIENT & PROJECT	PAGE 1 OF 105 including attachments
NIAGARA MOHAWK - NMP2	

CALCULATION TITLE (Indicative of the Objective):

QUALIFICATION OF THE MODIFIED MSIV ACTUATOR - SPEC. P303D

QA CATEGORY (✓)

☒ I - NUCLEAR SAFETY RELATED

☐ II ☐ III ☐ OTHER _____

CALCULATION IDENTIFICATION NUMBER

J.O. OR W.O. NO.	DIVISION & GROUP	CURRENT CALC. NO.	OPTIONAL TASK CODE	OPTIONAL WORK PACKAGE NO.
12177	EMD/EGS	MS-2126		

*** APPROVALS - SIGNATURE & DATE** D Bhargava 10/25/86

PREPARER(S)/DATE(S)	REVIEWER(S)/DATE(S)	INDEPENDENT REVIEWER(S)/DATE(S)	REV. NO. OR NEW CALC NO.	SUPERSEDES * CALC. NO. OR REV.	CONFIRMATION REQUIRED (✓) YES	NO
N Vijayaji 10/25/86 10/25/86	10/25/86 V Vijayaji 10/25/86	10/25/86 CHAT. LY				✓

DISTRIBUTION *

GROUP	NAME & LOCATION	COPY SENT (✓)	GROUP	NAME & LOCATION	COPY SENT (✓)
RECORDS MGT. FILES (OR FIRE FILE IF NONE)	Doc. Control-SY				

8612120054 861025
PDR ADOCK 05000410
A PDR

STONE & WEBSTER ENGINEERING CORPORATION

CALCULATION SHEET

A 9010.65

CALCULATION IDENTIFICATION NUMBER				PAGE 3
J.O. OR W.O. NO.	DIVISION & GROUP	CALCULATION NO.	OPTIONAL TASK CODE	
12177	EM/MECH E&S	MS- 2126		

TABLE OF CONTENTS

TITLE PAGE 1

TABLE OF CONTENTS 2

REVISION STATUS TABLE 3

INTRODUCTION 4

OBJECTIVE 5

ASSUMPTIONS 6

COMPUTER PROGRAM IDENTIFICATION 6

METHOD 6

REFERENCES 9

SUMMARY OF RESULTS 9A

CONCLUSIONS 9A

ANALYSIS 10

COMPUTER LOG 55

MICROFICHE 103

Attachment - 1 --- 56

" - 2 --- 64

" - 3 --- 82

" - 4 --- 84

" - 5 --- 96

REVISION STATUS TABLE

PAGE NO. 3
CALCULATION NO. MS-2126
JOB ORDER NO. 12/77.92

7750

REV NO.	PAGE NO.	REASON	REVISION/DATE	NON-INDEPENDENT REVIEWER/DATE	INDEPENDENT REVIEWER/DATE	APPROVAL/DATE

STONE & WEBSTER ENGINEERING CORPORATION

CALCULATION SHEET

S010.65

CALCULATION IDENTIFICATION NUMBER				PAGE 4
J.O. OR W.O. NO. 12177.92	DIVISION & GROUP EMD/E&S	CALCULATION NO. MS-2126	OPTIONAL TASK CODE	

INTRODUCTION

The main steam isolation valve design is modified because of its failure to operate during several phases of testing. A major modification is made to the actuator by replacing the mechanical latch mechanism by a hydraulic system described in E&DCR M28628 (attached). Several new items are introduced in the modified actuator. They are mainly :

1. Hydraulic Accumulator.
2. Refurbished SOV as per dwg. 81AL-001 (ref 11)
3. A pump motor assembly
4. Pressure Switch.

Qualification of hydraulic accumulator, pump motor and pressure switch for operability is not required because of their fail safe design feature (ref. 7). The component which is required to perform its safety function is the Solenoid Valve.

This solenoid valve is similar to the SOV used in the MSIV actuator which was tested at Wyle Lab simulating seismic and hydrodynamic loads. (Ref. 1). However, while the actuator was tested this solenoid valve had no safety function. Therefore this solenoid valve was never tested for its operability during the dynamic testing. The test proves that it operates after the dynamic test.

Because of the modified design of the actuator this SOV is supposed to function during the dynamic event. This necessitates having a proof of operability during the dynamic event. Also needed a similarity analysis by the Target Rock between the tested SOV and the SOV's now planned to be used (Ref. 11).

OBJECTIVE

The objective of this Calculation is to justify the qualification of the MSIV actuator during the seismic / hydrodynamic event.

A 5010 65

CALCULATION IDENTIFICATION NUMBER				PAGE 6
J.O. OR W.O. NO.	DIVISION & GROUP	CALCULATION NO.	OPTIONAL TASK CODE	
12177.92	EMD	MS-2126		

Assumptions

1. U-bolt Stiffness = 5.6×10^4 lb/in in lateral direction supporting the SOV to the frame; 2.1×10^5 lb/in in vertical direction.
2. Solenoid Valve Cover thickness = $\frac{1}{8}$"
3. Wt. of Jockey pump = 60 lb. (Ref. 7)
4. Others specified in the body of the Calc.

Computer Program Identification

1. STARDYNE - ST-330 Feb 01/84H Level.
2. One time usage computer program – for generating ARS from a base ARS input. (Att-4). Verification of the numerical accuracy is provided in ref. 12

Method

1. Solenoid Valve Qualification:

The actuator is modeled in STARDYNE computer prepared by Gulf & Western/Crosby. Piping Layout is modified to reflect as built Code Δ dimensions. The accl. at the valve locations are obtained by applying a Response Spectrum at the base of the actuator. This response spectrum is obtained from ref. 2. Target Rock Qualified a similar solenoid valve by applying a static load of 255 lb at the solenoid (Ref 11). A static run is made by applying 255 lb. at the solenoid. As the deflection of the bonnet tube is responsible for

STONE & WEBSTER ENGINEERING CORPORATION

CALCULATION SHEET

▲5010.65

CALCULATION IDENTIFICATION NUMBER				PAGE 7
J.O. OR W.O. NO.	DIVISION & GROUP	CALCULATION NO.	OPTIONAL TASK CODE	
12177.92	EMD	MS-2126		

The binding of the stem of the solenoid valve, only the deflection of the bonnet tube is noted in the above static run. A similar static run is made by applying 10 g accln. at all the mass points of the solenoid valve model. It should be noted that for these static runs a separate structurally identical valve model is used which represents only the valve body, bonnet tube, coil assembly and bracket. Comparison is made between the two static runs. A relation is obtained between the applied force at the solenoid and g' load at all the mass points so that they produce identical deflection at the bonnet tube. Accln. obtained at the valve location of the combined model is compared to the equivalent accln. due to 255 lb. static load at the solenoid.

Even though it is a class 1E component, static operability test instead of complete dynamic test is sufficient to prove it operability. The justification is as follows: The modes of failure of this SOV are - ① Jeopardise the electrical components. ② Binding of the stem inside the bonnet tube.

The SOV is normally closed (energized) and the coil is deenergized to open. Therefore incase the coil does not function the SOV will open. This will drain the hydraulic fluid and close the Main Steam Isolation valve. Binding of the stem inside the bonnet tube is the only concern. This can be demonstrated very easily by static operability and no dynamic testing is necessary.

2. Overall Qual. of the Actuator:

Retesting the complete actuator is not necessary because the total wt. of the actuator did not change significantly. Though some of the components are added inside, several components are deleted also. This weight effect will be discussed in the analysis section.

: Structural integrity of the accumulator and pump supports are qualified separately in ref. 3.

Note: The actuator has a bracing between the SOV's connecting the two valve covers. This bracing is not included in the mathematical model inorder to be consistent with the original crosby analysis. Evaluation of the results (computer run # 11) indicates that the two valves deflect in the same phase near the brace. Though the addition of brace shall not alter the results appreciably

A 5010.65

CALCULATION IDENTIFICATION NUMBER				PAGE 9
J.O. OR W.O. NO.	DIVISION & GROUP	CALCULATION NO.	OPTIONAL TASK CODE	
12177.92	EMD	MS-2126		

References

1. "Seismic Simulation Test Program on Series 600 Valve Actuator" — Wyle test Rpt # 46912-2 dated 11-14-83. SWEC file # STRS.05.360-5013A
2. SWEC Calc. 12177-MS-2006-Rev.1 Generation of ARS for MSIV & SRV based on As built piping analysis. Dated 10-25-86
3. SWEC. Calc. MS-2122 "Verification of Structural Integrity of The modified MSIV actuator — spec. P303D Dated 9-3-86
4. "frequency and Stress Analysis of Hydraulic Piping System" — Crosby Report # ER-81-34 Date 9-16-81 SDDF. dated 10/22/81
5. Gulf & Western / Crosby repart # ER-81-28 "Series 600 actuator Dynamic Analysis" 7/27/81 SWEC RSTD dated 10-29-81
6. E&DCR Y28628 Modification to MSIV actuators 10-10-86
7. Swec. Calc. 12177-MS-2121-1 "Hydraulic Analysis — MSIV" dated 9-9-86
8. Target Rock Corporation dwg. # 1145020-1 Rev. (None)
9. Crosby report # ER-117-79 "Finit Element Computer model of the EFCO 600 Actuator" — Rev 1 — 8/22/79

STONE & WEBSTER ENGINEERING CORPORATION

CALCULATION SHEET

▲5010 65

CALCULATION IDENTIFICATION NUMBER				PAGE 9A
J.O. OR W.O. NO.	DIVISION & GROUP	CALCULATION NO.	OPTIONAL TASK CODE	
12177.92	EMD	MS-2126		

10. E&DCR Y28671 SOV O'ring rework 10/10/86

11. Target Rock Design Report and Seismic Analysis Report # 2252C Dated 10-24-86
SDDF # STRS 05.360-5067A

12. SWEC. Calc. 12177-NM(C)-MS-2132
"Verification of a Computer program for ARS generation"
10-25-86

Summary of Results:

Based on the analysis performed in this calc, the required load at the SOV's at a distance of 15" from piping center Line is 500 lb. The required acceleration at the valve/piping Centerline is about 6.0 g's. The qualification of the SOV's must demonstrate operability under this load.

Conclusion

1. Overall adequacy for the qualification of the actuator is demonstrated thru dynamic testing per ref. 1. The spectra used in this test generated in ref. 2 remain unchanged even after the modifications of the actuator as shown in the analysis Section, Part VI.

2. The Structural Integrity of the newly added Cat II Components in the actuator is demonstrated thru ref. 3.

STONE & WEBSTER ENGINEERING CORPORATION

CALCULATION SHEET

▲ 5010.65

CALCULATION IDENTIFICATION NUMBER				
J.O. OR W.O. NO. 12177.92	DIVISION & GROUP EMD	CALCULATION NO. MS-2126	OPTIONAL TASK CODE	PAGE 9B

3. The qualification of the 2" SOV's is demonstrated by the following test and analysis results.

a) Dynamic testing (Ref. 1) where the g level at the SOV's are higher than the NMP2 required levels. Ref. 11 shows similarity between the SOV's used in that test vs SOV's now installed in the MSIV's. It is however, noted that during these tests, the SOV's were not required to function under the dynamic loading.

b) Dynamic tests in ref. 11, for a similar valve. These dynamic tests used an input level of 6.0 g's in the freq. range of 1-100 Hz.

c) Seismic analysis of the valves to a load of 500 lb. in ref. 11.

d) Static deflection testing of the valves in ref. 11, to a load of 500 lb. Operability of the valve under this load was demonstrated.

A 5010.85

CALCULATION IDENTIFICATION NUMBER				PAGE 10
J.O. OR W.O. NO. 12177.92	DIVISION & GROUP EMD	CALCULATION NO. MS-2126	OPTIONAL TASK CODE	

Analysis:

Parts I thru V below are utilized for determing the qualifications requirements for SOV's.
Part VI evaluates the effect of the added/deleted components in the actuator.

PART - I

A listing of the actuator model (without piping/valve) is obtained from the vendor. This is so called run # 13. The Listing follows in the next few pages.. Model and geometry can be obtained from ref. 5,9

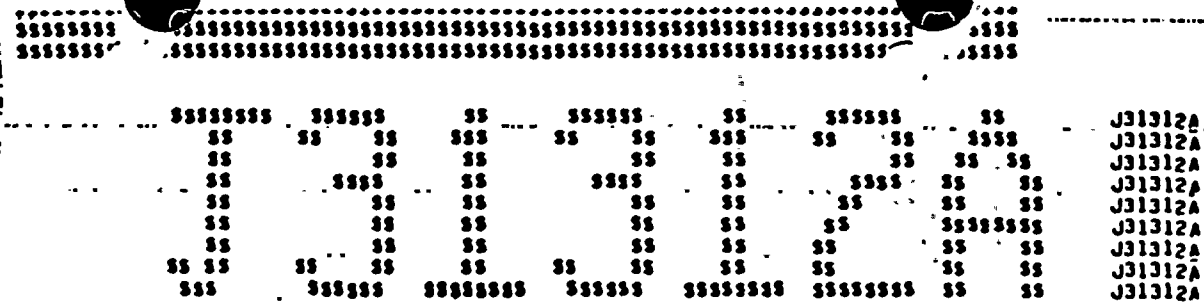

RUN 13

Beams 600, 601, 602, 603. Connected to Top of Actuator Cover.

12127.92 MS+2126 P.11

12177.92
MS-2126
12

BATCH UPDATED 06/26/81 TODAY IS 07/01/81

INDEPENDENCE DAY HOLIDAY SCHEDULE

ALL NOS AND SCOPE SYSTEMS WILL OPERATE ON THE FOLLOWING SCHEDULE:

JULY 3	0800-2000 HRS
JULY 4	NORMAL HOURS
JULY 5	NORMAL HOURS

*** ENTERING PHASE 1 *** RUN DATE = 07/01/81 TIME OF DAY 09.09.30 ***

**** GEOMETRY READ, PRINT AND CHECK LINK ****

12172.92
MS-2126
13

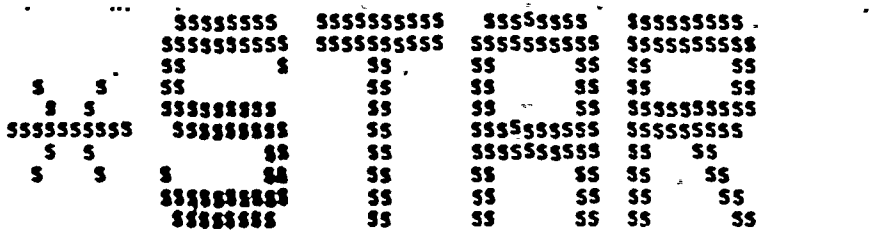

```
                 SSSSSSSS   SSSSSSSSSS   SSSSSSSS   SSSSSSSSS
                SSSSSSSSSS  SSSSSSSSSS  SSSSSSSSSS  SSSSSSSSSS
                SS       S      SS      SS      SS  SS      SS
   S    S       SS              SS      SS      SS  SS      SS
    S  S        SSSSSSSSS       SS      SS      SS  SSSSSSSSSS
SSSSSSSSSS       SSSSSSSSS      SS      SSSSSSSSSS  SSSSSSSSS
   S  S                 SS      SS      SSSSSSSSSS  SS    SS
   S    S      S        SS      SS      SS      SS  SS     SS
                SSSSSSSSSS      SS      SS      SS  SS      SS
                 SSSSSSSS       SS      SS      SS  SS      SS

*****************************************************************
*                    **  STAR       (R)  **                     *
*                    ** STARDYNE-3 (R)  **                      *
*                    ** JUN01/81 6 LEVEL**                      *
*****************************************************************
*  LATEST USER MANUAL  SEPT 1979                                *
*                                                               *
*                                                               *
*  RUN DATE      WEDNESDAY,  JUL.  1, 1981                      *
*                07/01/81   DAY 182 OF 1981                     *
*  RUN TIME      09.09.35.                                      *
*                                                               *
*   CYBERNET            SCOPE  3.4      +433B                   *
*                                                               *
*  (R) 1968 STARDYNE   SYSTEM  BY MECHANICS RESEARCH INC        *
*  (R) 1971 STARDYNE-2 SYSTEM  BY MECHANICS RESEARCH INC        *
*  (R) 1974 STARDYNE-3 SYSTEM  BY MECHANICS RESEARCH INC        *
*  (R) 1977 STARDYNE-3 SYSTEM  BY SYSTEM DEVELOPMENT CORP       *
*****************************************************************

*****************************************************************
*          S T A R D Y N E   B U L L E T I N S                  *
*                                                               *
*    A STARDYNE INFORMATION BULLETIN IS AVAILABLE               *
*  WHICH DESCRIBES IMPORTANT CHANGES CONCERNING THIS            *
*  RELEASE LEVEL OF THE PROGRAM.  IN ORDER TO ACCESS            *
*  THIS BULLETIN - ENTER THE FOLLOWING CONTROL CARDS..          *
*   AT SCOPE 3.4              AT NOS 1                          *
*   .                         .                                 *
*  APPLIC(STARBUL)            ATTACH(STARBUL/UN=LIBRARY)        *
*  REWIND(STARBUL)            REWIND(STARBUL)                   *
*  COPYBF(STARBUL,A)          COPYBF(STARBUL,A)                 *
*  REWIND(A)                  REWIND(A)                         *
*  COPYSBF(A,OUTPUT)          COPYSBF(A,OUTPUT)                 *
*   .                         .                                 *
*****************************************************************
```

12177.92
MS-2126
14

*** STARDYNE 3.0 INPUT ***

```
                                    *** STARDYNE 3.0      INPUT
                  /-------------------------------- CARD IMAGE ----- ------------------------/
                  1  4   8  12  16  20  24  28  32  36  40  44  48  52  56  60  64  68  72  76  80
                  *  *   *   *   *   *   *   *   *   *   *   *   *   *   *   *   *   *   *   *   *
      CARD NO     ***************************************************************************** CARD TYPE
          1       START                                                                          START

*****************************************************************
*  .  IF PROBLEMS ARE ENCOUNTERED OR IF INFORMATION             *
*  CONCERNING STARDYNE IS DESIRED, THE USER SHOULD              *
*  CONTACT THE LOCAL DATA CENTER STARDYNE ANALYST FIRST.        *
*        IF UNAVAILABLE, THEN CONTACT.....                      *
*        MR. GREG CLIFFORD                                      *
*        CONTROL DATA CORPORATION                               *
*        STARDYNE SERVICES                                      *
*        FACILITY CODE RSMFAC                                   *
*        1801 WEST COUNTY ROAD B                                *
*        ROSEVILLE, MINNESOTA 55113, USA                        *
*           TEL. (612) 482-2881                                 *
*           TWX. 29 0435 RSMFAC                                 *
*                                                               *
*                -AND/OR-                                       *
*        SYSTEM DEVELOPMENT CORPORATION                         *
*        STARDYNE, SUITE 3001                                   *
*        360 N. SEPULVEDA BLVD                                  *
*        EL SEGUNDO, CA 90245                                   *
*          TELEPHONES--OPERATOR        -OR-    DIRECT           *
*          (213) 615-1188                                       *
*                                                               *
*                X341   STARDYNE SECRETARY                      *
*                                                               *
*           TWX.              910 343-6443                      *
*           TELEX             65 - 2358                         *
*****************************************************************

*****************************************************************
*   APRIL 1981 PRESTAR ...                                      *
*      THE PRESTAR USERS GUIDE  TO INTERACTIVE,                 *
*    FREE-FIELD, INPUT DATA GENERATION FOR  STAR,               *
*    DYNRE1, DYNRE2, DYNRE3, ETC  IS NOW AVAILABLE.             *
*****************************************************************

*****************************************************************
*  -- STAR  PROGRAM  CORE  REQUIREMENTS --                      *
*                                                               *
*  FOR SOME LARGE PROBLEMS, THE STAR PROGRAM WILL REQUIRE       *
* MORE THAN  300000 (OCTAL) WORDS OF CENTRAL MEMORY.  IF        *
* THIS IS THE CASE, PRINT THE STARDYNE INFORMATION              *
* BULLETIN FOR THE  CM  REQUIRED FOR YOUR JOB.  IF THE CM       *
* PARAMETER IS ON THE JOB CARD, A REDUCE, CARD MAY BE           *
* ADVISABLE AS THE FIRST EXECUTABLE JCL CARD AFTER THE          *
* ACCOUNTING CARDS.                                             *
*****************************************************************

*****************************************************************
*    -- STARDYNE-3 AT CYBERNET SCOPE 3.4 --                     *
*                                                               *
*   .THIS RELEASE LEVEL OF STARDYNE IS EXPECTED TO BE           *
*    THE LAST ONE MADE AVAILABLE ON SCOPE 3.4. **               *
*                                                               *
*   .CYBERNET EXPECTS TO COMPLETE THE TRANSFER OF               *
```

12177.92
MS-2426
15

```
*     PPLICATION PROGRAM USAGE TO ITS NOS 1.3.
*   S   EMS BY THE END OF 1981, AND THEN DISCONTINUE
*   ACCESS TO STARDYNE ON SCOPE 3.4.
*
*   .STARDYNE USERS SHOULD-
*         .BEGIN NEW ANALYSES ON NOS.
*         .CONTACT SALESMAN FOR NOS MANUALS
*                              . NOS PROCEDURES
*                              . NOS VALIDATION.
*
*   .STARDYNE IS IDENTICAL ON NOS (EXCEPT FOR JCL).
*
*  **SERIOUS ERRORS ONLY WILL BE CORRECTED.
*
*****************************************************************
```

12177.92
MS-2426
16

*** STARDYNE 3.0 INPUT ***

*** STARDYNE 3.0 INPUT

CARD IMAGE

1 4 8 12 16 20 24 28 32 36 40 44 48 52 56 60 64 68 72 76 80

CARD NO						CARD TYPE
2	EFCO 600 FRAME. NIAGARA MOHAWK					EFC
3	MATL8	1	29000000.	0.3	0.283	MATL8
4	MATL8	2	29000000.	0.3	0.0	MATL8
5	END					END
6	NODE	1	0.0	0.0	17.25	NODE
7	NODE	2	35.25	-12.0	17.25	NODE
8		3	0.0	-23.5	17.25	NODE
9		4	-22.0	0.0	17.25	NODE
10		5	0.0	23.5	17.25	NODE
11		6	-11.0	23.5	17.25	NODE
12		7	-23.5	0.0	17.25	NODE
13		8	-10.44	12.0	17.25	NODE
14		9	-10.44	-12.0	17.25	NODE
15		10	10.44	12.0	17.25	NODE
16		11	35.25	23.5	17.25	NODE
17		12	-48.0	23.5	17.25	NODE
18		13	-48.0	0.0	17.25	NODE
19		14	-48.0	-23.5	17.25	NODE
20		15	7.0	12.0	17.25	NODE
21		16	10.44	-12.0	17.25	NODE
22		17	0.0	7.0	17.25	NODE
23		18	5.82	3.88	17.25	NODE
24		19	-11.0	19.05	17.25	NODE
25		20	22.0	0.0	17.25	NODE
26		21	-35.5	12.0	17.25	NODE
27		22	11.0	19.05	17.25	NODE
28		23	-11.0	-19.05	17.25	NODE
29		24	0.0	-22.0	17.25	NODE
30		25	11.0	-19.05	17.25	NODE
31		26	0.0	22.0	17.25	NODE
32		27	0.0	-7.0	17.25	NODE
33		28	6.06	-3.5	17.25	NODE
34		29	-6.29	-3.08	17.25	NODE
35		30	-5.87	3.82	17.25	NODE
36		31	-35.5	12.0	19.5	NODE
37		32	-35.5	12.0	38.94	NODE
38		33-9.844	17.05	0.0		NODE
39		34-17.682	8.656	0.0		NODE
40		35-19.688	0.0	0.0		NODE
41		36-17.682	-8.656	0.0		NODE
42		3716.382	-18.919	0.0		NODE
43		3819.688	0.0	0.0		NODE
44		3916.382	18.919	0.0		NODE
45		408.0	-19.688	0.0		NODE
46		41-9.844	-17.05	0.0		NODE
47		428.0	19.688	0.0		NODE
48		439.844	17.05	0.0		NODE
49		449.844	-17.05	0.0		NODE
50		45	0.0	0.0	59.75	NODE
51		46	35.25	-12.0	59.75	NODE
52		47	0.0	-23.5	59.75	NODE
53		48	0.0	23.5	59.75	NODE
54		49	-6.0	6.0	59.75	NODE

L1
9212-SW1
76.4721

*** STARDYNE 3.0 INP[illegible]

CARD IMAGE

CARD NO	1 4 8 12 16 20 24 28 32 36 40 44 48 52 56 60 64 68 72 76 80	CARD TYPE
55	50 -23.5 0.0 59.75	NODE
56	51 6.0 0.0 59.75	NODE
57	52 0.0 -6.0 59.75	NODE
58	53 -6.0 0.0 59.75	NODE
59	54 -6.0 -6.0 59.75	NODE
60	55 0.0 6.0 59.75	NODE
61	56 -23.5 6.0 59.75	NODE
62	57 -23.5 -6.0 59.75	NODE
63	58 -7.0 0.0 15.5	NODE
64	59 7.0 0.0 15.5	NODE
65	60 -35.5 12.0 28.38	NODE
66	102 -33.5 12.0 17.25	NODE
67	130-5.095 -19.017 0.0	NODE
68	1315.095 -19.017 0.0	NODE
69	13213.921 -13.921 0.0	NODE
70	13319.017 -5.095 0.0	NODE
71	13419.017 5.095 0.0	NODE
72	13513.921 13.921 0.0	NODE
73	1365.095 19.017 0.0	NODE
74	137-5.095 19.017 0.0	NODE
75	138-13.921 13.921 0.0	NODE
76	139-19.017 5.095 0.0	NODE
77	140-19.017 -5.095 0.0	NODE
78	141-13.921 -13.921 0.0	NODE
79	150 11.0 23.5 17.25	NODE
80	151 21.5 23.5 17.25	NODE
81	152 35.25 16.5 17.25	NODE
82	153 35.25 6.0 17.25	NODE
83	154 35.25 0.0 17.25	NODE
84	155 35.25 -23.5 17.25	NODE
85	156 18.44 -23.5 17.25	NODE
86	157 11.0 -23.5 17.25	NODE
87	158 -11.0 -23.5 17.25	NODE
88	159 -18.44 -23.5 17.25	NODE
89	160 -18.44 23.5 17.25	NODE
90	161 32.0 23.5 17.25	NODE
91	162 0.0 16.0 17.25	NODE
92	163 12.0 -12.0 17.25	NODE
93	164 0.0 -12.0 17.25	NODE
94	165 -12.0 -12.0 17.25	NODE
95	166 -26.0 -12.0 17.25	NODE
96	167 -48.0 -12.0 17.25	NODE
97	168 -23.5 0.0 38.94	NODE
98	169 -23.5 23.5 38.94	NODE
99	170 0.0 23.5 28.38	NODE
100	171 0.0 23.5 44.06	NODE
101	172 0.0 14.75 44.06	NODE
102	173 0.0 14.75 59.75	NODE
103	174 -23.5 0.0 49.34	NODE
104	175 -14.75 0.0 49.34	NODE
105	176 -14.75 0.0 59.75	NODE
106	177 -23.5 -23.5 38.94	NODE
107	178 17.62 -23.5 38.5	NODE
108	179 17.62 23.5 38.5	NODE

12177.92
MS-2126
18

*** STARDYNE 3.0 INPUT ***

CARD IMAGE

*** STARDYNE 3.0 INPUT

CARD IMAGE

1 4 8 12 16 20 24 28 32 36 40 44 48 52 56 60 64 68 72 76 80

CARD NO					CARD TYPE
109	180	-6.0	23.5	59.75	NODE
110	181	6.0	23.5	59.75	NODE
111	182	-6.0	14.75	59.75	NODE
112	183	6.0	14.75	59.75	NODE
113	184	-14.75	6.0	59.75	NODE
114	185	-12.0	-6.0	59.75	NODE
115	186	-17.5	-6.0	59.75	NODE
116	187	-14.75	14.75	59.75	NODE
117	188	14.68	14.75	59.75	NODE
118	189	29.3	0.0	59.75	NODE
119	190	35.25	-6.0	59.75	NODE
120	191	35.25	-16.0	59.75	NODE
121	192	11.0	-23.5	59.75	NODE
122	193	-6.0	-23.5	59.75	NODE
123	194	-12.0	-17.5	59.75	NODE
124	195	-6.0	-17.5	59.75	NODE
125	196	0.0	-17.5	59.75	NODE
126	197	11.0	-17.5	59.75	NODE
127	198	30.5	-17.5	59.75	NODE
128	199	29.3	-6.0	59.75	NODE
129	200	9.0	-6.0	59.75	NODE
130	201	35.25	-12.0	27.0	NODE
131	202	35.25	-12.0	35.5	NODE
132	203	35.25	-12.0	41.5	NODE
133	204	35.25	-12.0	50.0	NODE
134	205	28.75	-12.0	50.0	NODE
135	207	28.75	-12.0	41.5	NODE
136	210	28.75	-12.0	27.0	NODE
137	226	20.0	-12.0	59.75	NODE
138	227	20.0	-6.0	59.75	NODE
139	228	20.0	0.0	59.75	NODE
140	229	20.0	9.38	59.75	NODE
141	230	28.0	-12.0	59.75	NODE
142	231	0.0	-12.0	59.75	NODE
143	232	-6.0	-12.0	59.75	NODE
144	233	-12.0	-12.0	59.75	NODE
145	234	-17.5	-12.0	59.75	NODE
146	235	12.0	-12.0	59.75	NODE
147	236	20.0	-17.5	59.75	NODE
148	237	-19.0	-13.0	17.25	NODE
149	246	-23.5	12.0	38.94	NODE
150	247	20.0	-20.27	59.75	NODE
151	248	0.0	-23.5	38.5	NODE
152	249	-48.0	-23.5	38.5	NODE
153	250	35.25	-23.5	38.5	NODE
154	251	-62.0	-23.5	38.5	NODE
155	252	-23.5	-23.5	62.0	NODE
156	253	0.0	-23.5	62.0	NODE
157	254	17.62	-23.5	62.0	NODE
158	255	35.25	-23.5	62.0	NODE
159	256	-48.0	-23.5	62.0	NODE
160	257	-62.0	-23.5	62.0	NODE
161	258	-62.0	0.0	62.0	NODE
162	259	-62.0	23.5	62.0	NODE

2177.92
MS-2126
19

*** STARDYNE 3.0 INPUT

CARD IMAGE

1 4 8 12 16 20 24 28 32 36 40 44 48 52 56 60 64 68 72 76 80

CARD NO								CARD TYPE
163		260	-62.0	23.5	38.5			NODE
164		261	-62.0	0.0	38.5			NODE
165		262	-62.0	-23.5	17.25			NODE
166		263	-62.0	0.0	17.25			NODE
167		264	-62.0	23.5	17.25			NODE
168		265	-48.0	23.5	62.0			NODE
169		266	-23.5	23.5	62.0			NODE
170		267	0.0	23.5	62.0			NODE
171		268	17.62	23.5	62.0			NODE
172		269	35.25	23.5	62.0			NODE
173		270	35.25	23.5	38.5			NODE
174		271	0.0	23.5	38.5			NODE
175		272	35.25	5.75	38.5			NODE
176		273	35.25	-12.0	38.5			NODE
177		274	35.25	-12.0	62.0			NODE
178		275	35.25	0.0	62.0			NODE
179		276	-48.0	23.5	38.5			NODE
180		277	-48.0	0.0	62.0			NODE
181		278	-23.5	0.0	62.0			NODE
182		279	0.0	0.0	62.0			NODE
183		280	17.62	0.0	62.0			NODE
184		300	32.0	21.25	17.25			NODE
185		301	32.0	16.5	17.25			NODE
186		302	32.0	6.0	17.25			NODE
187		303	21.5	6.0	17.25			NODE
188		304	21.5	16.5	17.25			NODE
189		305	21.5	21.25	17.25			NODE
190	NODE	400	-43.51	0.000	21.25			NODE
191	NODE	401	-43.51	-23.5	21.25			NODE
192	NODE	500	-48.0	23.50	59.75			NODE
193		501	-48.0	0.000	59.75			NODE
194		502	-48.0	-23.5	59.75			NODE
195		510	-23.5	23.50	59.75			NODE
196		511	-23.5	-23.5	59.75			NODE
197		520	35.25	23.50	59.75			NODE
198		521	35.25	-23.5	59.75			NODE
199	NODE	530	0.0	-35.	17.25			NODE
200		540	0.0	35.0	17.25			NODE
201	NODE	600	-18.44	-35.0	17.25			NODE
202	NODE	610	18.44	-35.0	17.25			NODE
203	NODE	620	-18.44	35.0	17.25			NODE
204	NODE	630	18.44	35.0	17.25			NODE
205	END							END
206	RESTG	33 44	1111111					RESTG
207	RESTG	530 540	10111111					RESTG
208	END							END
209	BEAMG	7	17	18	1	2	31	BEAMG
210		8	18	59	1		1	BEAMG
211		9	59	28	1			BEAMG
212		10	18	28	1		31	BEAMG
213		11	28	27	1			BEAMG
214		12	27	29	1			BEAMG
215		13	29	58	1		1	BEAMG
216		14	58	30	1			BEAMG

12/27/92
MC-2126
:20

*** STARDYNE 3.0 INPUT ***

CARD IMAGE

*** STARDYNE 3.0 INPUT **

CARD IMAGE

CARD NO	1	4	8	12	16	20	24	28	32	36	40	44	48	52	56	60	64	68	72	76	80	CARD TYPE
217				15		29		30		1		31										BEAMG
218				16		30		17		1												BEAMG
219				17		5		26		22		1										BEAMG
220				18		150		22		5												BEAMG
221				19		157		25		24												BEAMG
222				20		3		24		25												BEAMG
223				21		158		23		24												BEAMG
224				22		7		4		8												BEAMG
225				23		6		19		5												BEAMG
226				24		151		305		150												BEAMG
227				26		162		17		22	1	2										BEAMG
228				27		16		28		24												BEAMG
229				28		9		29		27												BEAMG
230				29		5		150		22		40										BEAMG
231				30		150		151		305												BEAMG
232				31		151		161		300												BEAMG
233				32		161		11		300												BEAMG
234				33		11		152		300												BEAMG
235				34		152		153		302												BEAMG
236				35		153		154		302												BEAMG
237				36		154		2		20												BEAMG
238				37		2		155		16												BEAMG
239				38		155		156		2												BEAMG
240				39		156		157		25												BEAMG
241				40		157		3		24												BEAMG
242				41		3		158		24												BEAMG
243				42		158		159		23												BEAMG
244				43		159		14		9												BEAMG
245				44		14		167		7												BEAMG
246				45		13		12		21												BEAMG
247				46		12		160		21												BEAMG
248				47		160		6		19												BEAMG
249				48		6		5		26												BEAMG
250				49		13		7		21		40										BEAMG
251				50		13		21		12		10										BEAMG
252				51		12		21		13												BEAMG
253				54		26		162		22		2										BEAMG
254				55		165		164		24		3										BEAMG
255				56		164		163		24		3										BEAMG
256				57		163		16		156												BEAMG
257				59		9		165		23												BEAMG
258				60		166		9		159												BEAMG
259				61		167		166		14												BEAMG
260				62		167		13		7		40										BEAMG
261	BEAMG			100		20		16		37		2										BEAMG
262				109		16		25		44												BEAMG
263				110		25		24		44												BEAMG
264				111		23		24		41												BEAMG
265				112		23		9		41												BEAMG
266				113		4		9		35												BEAMG
267				114		4		8		35												BEAMG
268				115		19		8		34												BEAMG
269				116		19		26		42												BEAMG
270				117		22		26		42												BEAMG

12177.92
MS-2126
21

CARD IMAGE

CARD NO							CARD TYPE
271		118	10	22	39		BEAMG
272		119	10	20	39		BEAMG
273		120	38	134	20	16	BEAMG
274		121	134	39	18		BEAMG
275		122	135	39	18		BEAMG
276		123	135	43	22		BEAMG
277		124	136	43	22		BEAMG
278		125	136	42	26		BEAMG
279		126	137	42	26		BEAMG
280		127	137	33	19		BEAMG
281		128	138	33	19		BEAMG
282		129	138	34	8		BEAMG
283		130	139	34	8		BEAMG
284		131	139	35	4		BEAMG
285		132	140	35	4		BEAMG
286		133	140	36	9		BEAMG
287		134	141	36	9		BEAMG
288		135	141	41	23		BEAMG
289		136	130	41	23		BEAMG
290		137	130	40	24		BEAMG
291		138	131	40	24		BEAMG
292		139	131	44	25		BEAMG
293		140	132	44	25		BEAMG
294		141	132	37	16		BEAMG
295		142	133	37	16		BEAMG
296		143	133	38	28		BEAMG
297		145	7	168	13	48	BEAMG
298		146	168	174	175		BEAMG
299		147	174	50	176		BEAMG
300		148	12	169	5		BEAMG
301		149	169	48	171		BEAMG
302		150	5	170	1	40	BEAMG
303		151	170	271	172		BEAMG
304		152	171	48	173		BEAMG
305		154	177	47	178		BEAMG
306		155	47	178	177		BEAMG
307		156	178	155	3		BEAMG
308		157	48	179	171		BEAMG
309		158	179	11	5		BEAMG
310		159	11	39	1	18	BEAMG
311		160	154	38	1		BEAMG
312		161	155	37	1		BEAMG
313		162	14	36	1		BEAMG
314		163	13	35	1		BEAMG
315		164	12	34	1		BEAMG
316		165	58	35	1	4	BEAMG
317		166	59	38	1		BEAMG
318	BEAMG	167	181	188	183	30	BEAMG
319		168	188	229	51		BEAMG
320		169	229	189	228		BEAMG
321		170	189	198	199		BEAMG
322		171	191	198	230	12	BEAMG
323		172	198	247	236		BEAMG
324		173	247	192	197		BEAMG

MS-21276-22

*** STARDYNE 3.0 INPUT ***

CARD IMAGE

CARD IMAGE

CARD NO		1 4	8 12	16 20	24 28	32 36	40 44	48 52	56 60	64 68	72 76	80	CARD TYPE
325			174	193	194	195							BEAMG
326			175	194	234	233							BEAMG
327			176	234	57	186							BEAMG
328			177	56	187	184							BEAMG
329			178	187	188	182							BEAMG
330			179	58	51	45	2 1						BEAMG
331			180	81	52	45							BEAMG
332			181	82	53	45							BEAMG
333			182	83	55	45							BEAMG
334			187	46	238	190	1 3						BEAMG
335			188	230	226	236							BEAMG
336			189	226	235	236							BEAMG
337			190	235	231	196							BEAMG
338			191	231	232	196							BEAMG
339			192	232	233	194							BEAMG
340			193	233	234	194							BEAMG
341	BEAMG		201	2	201	210	1 5						BEAMG
342			202	202	201	210							BEAMG
343			203	202	273	207							BEAMG
344			204	204	203	207							BEAMG
345			205	46	204	205							BEAMG
346			267	21	31	12	14						BEAMG
347			278	169	5	168	1 40						BEAMG
348			279	271	171	172	40						BEAMG
349			280	273	203	207	5						BEAMG
350			281	47	253	45	2 1						BEAMG
351			282	46	274	45							BEAMG
352			283	48	267	45							BEAMG
353			284	11	272	2	1 40						BEAMG
354			285	272	46	2							BEAMG
355			290	102	8	7	1 28						BEAMG
356			291	168	58	7	40						BEAMG
357			292	21	102	60	2 1						BEAMG
358			341	50	278	45	2 13						BEAMG
359	BEAMG		500	181	48	173	1 30						BEAMG
360			501	48	180	182							BEAMG
361			502	56	50	176							BEAMG
362			503	50	57	186							BEAMG
363			504	193	47	196							BEAMG
364			505	47	192	197							BEAMG
365			506	191	46	230							BEAMG
366			507	46	190	199							BEAMG
367	BEAMG		550	400	13	7	1 40						BEAMG
368	BEAMG		551	400	168	7	1 40						BEAMG
369	BEAMG		560	14	401	3	1 40						BEAMG
370	BEAMG		561	401	177	3	1 40						BEAMG
371	BEAMG		600	600	252	159	1 42						BEAMG
372			601	610	254	156							BEAMG
373			602	620	266	160							BEAMG
374			603	630	268	151							BEAMG
375			604	620	34	160							BEAMG
376			605	630	39	151							BEAMG
377			606	36	600	9							BEAMG
378			607	37	610	16							BEAMG

*** STARDYNE 3.0 INPUT ***

CARD IMAGE

CARD NO																					CARD TYPE
379		608		620		160		266													BEAMG
380		609		630		151		268													BEAMG
381		610		159		600		252													BEAMG
382		611		156		610		254													BEAMG
383		612		160		266		620													BEAMG
384		613		151		268		630													BEAMG
385		614		159		252		9													BEAMG
386		615		156		254		16													BEAMG
387		616		8		160		34													BEAMG
388		617		10		151		39													BEAMG
389		618		9		159		252													BEAMG
390		619		16		156		254													BEAMG
391		620		34		8		620													BEAMG
392		621		39		10		630													BEAMG
393		622		9		36		159													BEAMG
394		623		16		37		156													BEAMG
395	BEAMPRNT	1																			BEAMP
396	END																				END
397	BPROP1	1	1000.0		10000.		5000.		5000.		.85		.85								BPROP
398	BPROP1	2	2.859E+00		10.39E+00		6.944E+00		6.944E+00		4.400E-01		4.400E-01								BPROP
399	BPROP2	24.0		4.0																	BPROP
400	BPROP1	3	12.25		3.23		44.873		65.952		1.0		1.0								BPROP
401	BPROP2	30.0		4.0																	BPROP
402	BPROP1	4	1.750E+00		1.340E+00		9.110E-01		9.110E-01		4.400E-01		4.400E-01								BPROP
403	BPROP2	42.0		2.0																	BPROP
404	BPROP1	5	8.030E+00		6.120E+01		2.774E+01		7.197E+01		4.400E-01		4.400E-01								BPROP
405	BPROP2	58.0		4.686																	BPROP
406	BPROP1	6	4.476E+01		1.035E+03		5.176E+02		5.176E+02		5.300E-01		5.300E-01								BPROP
407	BPROP2	611.0		11.0																	BPROP
408	BPROP1	7	1.037E+02		3.370E+03		1.685E+03		1.685E+03		5.300E-01		5.300E-01								BPROP
409	BPROP2	714.0		14.0																	BPROP
410	BPROP1	8	1.826E+01		2.768E+02		1.384E+02		1.384E+02		5.300E-01		5.300E-01								BPROP
411	BPROP2	88.5		8.5																	BPROP
412	BPROP1	9	1.885E+01		1.744E+02		8.718E+01		8.720E+01		5.300E-01		5.300E-01								BPROP
413	BPROP2	97.0		7.0																	BPROP
414	BPROP1	1016.0		17.97		85.3		5.3		0.85		0.85									BPROP
415	BPROP2	102.0		8.0																	BPROP
416	BPROP1	11	4.375E+01		1.217E+02		7.150E+02		3.560E+01		8.500E-01		8.500E-01								BPROP
417	BPROP2	113.125		14.0																	BPROP
418	BPROP1	12	6.080E-01		6.600E-03		4.050E-01		1.500E-02		4.400E-01		4.400E-01								BPROP
419	BPROP2	120.898		2.375																	BPROP
420	BPROP1	13	1.000E+03		1.000E+04		5.000E+03		5.000E+03		8.500E-01		8.500E-01								BPROP
421	BPROP1	14	1.000E+03		1.000E+04		5.000E+03		5.000E+03		8.500E-01		8.500E-01								BPROP
422	BPROP1	15	2.969E+01		9.714E+01		6.908E+02		2.420E+01		4.400E-01		4.400E-01								BPROP
423	BPROP2	153.125		14.0																	BPROP
424	BPROP1	16	7.500E+00		7.751E+00		3.910E+00		5.625E+00		8.500E-01		8.500E-01								BPROP
425	BPROP2	163.0		2.5																	BPROP
426	BPROP1	17	1.000E+03		1.000E+04		5.000E+03		5.000E+03		8.500E-01		8.500E-01								BPROP
427	BPROP1	18	3.750E+00		1.310E+01		8.828E+00		8.828E+00		4.400E-01		4.400E-01								BPROP
428	BPROP2	184.0		4.0																	BPROP
429	BPROP1	19	2.911E+02		5.422E+04		2.711E+04		2.711E+04		5.300E-01		5.300E-01								BPROP
430	BPROP2	1930.5		30.5																	BPROP
431	BPROP1	20	4.580E+02		1.638E+05		8.191E+04		8.191E+04		5.300E-01		5.300E-01								BPROP
432	BPROP2	2041.5		41.5																	BPROP

12177.92
MS-2126
24

*** STARDYNE 3.0 INPUT ***

CARD IMAGE

1 4 8 12 16 20 24 28 32 36 40 44 48 52 56 60 64 68 72 76 80

*** STARDYNE 3.0 INPUT ***

CARD IMAGE

CARD NO																						CARD TYPE
433	BPROP1	21	7.069E+02	3.623E+05	1.811E+05	1.811E+05	8.900E-01	8.900E-01														BPROP
434	BPROP1	22	7.714E+00	2.948E+02	1.474E+02	1.474E+02	5.300E-01	5.300E-01														BPROP
435	BPROP2	2213.767		13.767																		BPROP
436	BPROP1	23	8.796E+01	4.398E+03	2.199E+03	2.199E+03	8.900E-01	8.900E-01														BPROP
437	BPROP1	24	1.579E+01	9.140E+02	5.031E+02	5.989E+02	5.000E-01	5.000E-01														BPROP
438	BPROP2	2428.768		14.384																		BPROP
439	BPROP1	26	4.888E+01	3.797E+02	4.297E+02	2.182E+02	5.607E-01	3.819E-01														BPROP
440	BPROP1	28	7.508E+00	3.672E+01	1.766E+01	4.800E+01	4.400E-01	4.400E-01														BPROP
441	BPROP2	288.0		4.0																		BPROP
442	BPROP1	29	5.448E+00	1.786E+01	1.204E+01	1.204E+01	4.400E-01	4.400E-01														BPROP
443	BPROP2	294.0		4.0																		BPROP
444	BPROP1	30	4.450E-01	5.200E-03	1.240E-01	1.350E-02	4.400E-01	4.400E-01														BPROP
445	BPROP2	300.828		1.5																		BPROP
446	BPROP1	31	1.000E+01	1.274E+01	1.333E+01	5.208E+00	8.500E-01	8.500E-01														BPROP
447	BPROP2	312.5		4.0																		BPROP
448	BPROP1	3225.0		61.4	133.3	20.3	0.85	0.85														BPROP
449	BPROP2	323.125		8.0																		BPROP
450	BPROP1	3314.0		14.9	124.4	12.1	0.44	0.44														BPROP
451	BPROP2	333.125		8.0																		BPROP
452	BPROP2	343.0		8.0																		BPROP
453	BPROP1	3424.0		55.	128.	18.	0.85	0.85														BPROP
454	BPROP1	3521.0		24.64	192.9	7.0	0.85	0.85														BPROP
455	BPROP2	352.0		10.5																		BPROP
456	BPROP1	36240.1		62272.	31136.	31136.0	0.53	0.53														BPROP
457	BPROP2	3634.5		34.5																		BPROP
458	BPROP1	37221.1		58002.	29001.	29001.	0.53	0.53														BPROP
459	BPROP2	3734.5		34.5																		BPROP
460	BPROP1	40	5.438	12.87	12.04	12.04	0.44	0.44														BPROP
461	BPROP2	40	4.00	4.00																		BPROP
462	BPROP1	41	0.4224	0.0818	0.0555	0.0555	0.44	0.44														BPROP
463	BPROP2	41	1.0	1.0																		BPROP
464	BPROP1	42	4.0	2.25	1.333	1.333	0.85	0.85														BPROP
465	BPROP2	42	2.0	2.0																		BPROP
466	END																					END
467	TRIAB	11	15	17	18	.25																TRIAB
468		12	303	18	20																	TRIAB
469		13	20	18	28																	TRIAB
470		14	4	29	30																	TRIAB
471		15	4	30	8																	TRIAB
472		16	8	30	19																	TRIAB
473		17	19	30	17																	TRIAB
474		18	19	17	26																	TRIAB
475		19	26	17	15																	TRIAB
476		20	26	15	22																	TRIAB
477		21	22	15	10	-1	4.5	4.0	0.0													TRIAB
478		22	10	15	18	1	.25															TRIAB
479		23	10	18	303																	TRIAB
480		24	304	22	10																	TRIAB
481		25	304	10	303																	TRIAB
482		26	11	161	300																	TRIAB
483		27	153	302	154																	TRIAB
484		28	16	25	156																	TRIAB
485		29	157	156	25																	TRIAB
486		30	159	158	23																	TRIAB

121.77.92
MS-2126
25

CARD IMAGE

CARD NO		1	4	8	12	16	20	24	28	32	36	40	44	48	52	56	60	64	68	72	76	80	CARD TYPE
487					31		23		9		159												TRIAB
488					32		9		4		166												TRIAB
489					33		9		166		159												TRIAB
490					34		12		13		21												TRIAB
491					35		8		19		160												TRIAB
492					36		6		160		19												TRIAB
493					37		25		16		163												TRIAB
494					38		9		23		165												TRIAB
495					39		187		182		188				.375								TRIAB
496					40		56		184		187												TRIAB
497					41		183		188		181												TRIAB
498					42		180		183		51												TRIAB
499					43		188		51		229												TRIAB
500					44		51		228		229												TRIAB
501					45		228		189		229												TRIAB
502					46		198		236		247												TRIAB
503					47		186		57		234												TRIAB
504					48		233		234		194												TRIAB
505					49		52		200		51												TRIAB
506					50		199		198		189												TRIAB
507					51		195		194		193												TRIAB
508					52		54		52		53												TRIAB
509					53		55		49		53												TRIAB
510					54		186		185		176												TRIAB
511					55		5		162		170			-1	4.5		4.0						TRIAB
512					56		172		171		170			-1	4.5		4.0						TRIAB
513					57		171		172		48			-1	4.5		4.0						TRIAB
514					58		173		48		172			-1	4.5		4.0						TRIAB
515					59		55		173		172			-1	4.5		4.0						TRIAB
516					60		175		174		168			-1	4.5		4.0						TRIAB
517					61		174		175		50			-1	4.5		4.0						TRIAB
518					62		176		50		175			-1	4.5		4.0						TRIAB
519					63		53		176		175			-1	4.5		4.0						TRIAB
520					65		32		246		169				0.75								TRIAB
521					66		246		32		168												TRIAB
522					72		13		7		168				0.5								TRIAB
523					73		7		58		168												TRIAB
524	TRIAB				74		41		23		9		1	10.38									TRIAB
525					75		41		9		36		1	10.38									TRIAB
526					76		36		9		4		1	10.38									TRIAB
527					77		36		4		35		1	10.38									TRIAB
528					78		34		35		4		1	10.38									TRIAB
529					79		34		4		8		1	10.38									TRIAB
530					80		34		8		19		1	10.38									TRIAB
531					81		34		19		33		1	10.38									TRIAB
532					88		43		22		10		1	10.38									TRIAB
533					89		43		10		39		1	10.38									TRIAB
534					90		39		10		20		1	10.38									TRIAB
535					91		39		20		38		1	10.38									TRIAB
536					92		38		20		16		1	10.38									TRIAB
537					93		38		16		37		1	10.38									TRIAB
538					94		37		16		25		1	10.38									TRIAB
539					95		37		25		44		1	10.38									TRIAB
540	TRIAB				100		12		34		8		1		0.5								TRIAB

12/27/92 MS-2126 26

*** STARDYNE 3.0 INPUT

CARD IMAGE

1 4 8 12 16 20 24 28 32 36 40 44 48 52 56 60 64 68 72 76 80

CARD NO									CARD TYPE
541		101	13	35	4	1	0.5		TRIAB
542		102	14	36	9	1	0.5		TRIAB
543		103	37	155	16	1	0.5		TRIAB
544		104	38	154	20	1	0.5		TRIAB
545		105	39	11	10	1	0.5		TRIAB
546	TRIAB	110	608	252	159	1	0.375)		TRIAB
547		111	610	254	156				TRIAB
548		112	620	160	266				TRIAB
549		113	630	151	268				TRIAB
550	TRIAB	114	600	159	36	1	(0.375		TRIAB
551		115	610	156	37				TRIAB
552		116	160	620	34				TRIAB
553		117	151	630	39				TRIAB
554		118	160	34	8				TRIAB
555		119	151	39	10				TRIAB
556		120	159	9	36				TRIAB
557		121	156	16	37				TRIAB
558	END								END
559	QUADB	16	163	16	20	28		.25	QUADB
560		17	164	163	28	27			QUADB
561		18	24	25	163	164			QUADB
562		19	23	24	164	165			QUADB
563		20	165	164	27	29			QUADB
564		21	9	165	29	4			QUADB
565		22	151	150	22	304			QUADB
566		23	161	151	305	308		.38	QUADB
567		24	152	11	308	301			QUADB
568		25	300	305	304	301			QUADB
569		26	152	301	302	153			QUADB
570		27	301	304	303	302			QUADB
571		28	302	303	20	154			QUADB
572		29	154	20	16	2		.25	QUADB
573		30	2	16	156	155			QUADB
574		31	166	167	14	156			QUADB
575		32	4	13	167	166			QUADB
576		33	8	21	13	4			QUADB
577		34	160	12	21	8			QUADB
578		35	181	48	173	183		.375	QUADB
579		36	183	173	55	51			QUADB
580		37	48	180	182	173			QUADB
581		38	173	182	49	55			QUADB
582		39	184	56	50	176			QUADB
583		40	49	184	176	53			QUADB
584		41	176	50	57	186			QUADB
585		42	53	176	185	54			QUADB
586		43	190	199	230	46			QUADB
587		44	46	230	198	191			QUADB
588		45	197	196	47	192			QUADB
589		46	196	195	193	47			QUADB
590		47	199	227	226	230			QUADB
591		48	230	226	236	198			QUADB
592		49	227	200	235	226			QUADB
593		50	226	235	197	236			QUADB
594		51	235	231	196	197			QUADB

MS-212-4-27-69

*** STARDYNE 3.0 INPUT ***

CARD IMAGE

CARD NO									CARD TYPE
595		52	288	52	231	235			QUADB
596		53	52	54	232	231			QUADB
597		54	231	232	195	196			QUADB
598		55	232	233	194	195			QUADB
599		56	54	185	233	232			QUADB
600		57	185	186	234	233			QUADB
601		58	234	197	192	247			QUADB
602		59	198	228	227	199			QUADB
603		60	228	51	208	227			QUADB
604		61	182	187	184	49			QUADB
605		92	154	11	270	272	1	.25	QUADB
606		93	272	270	269	275			QUADB
607		94	273	272	275	274			QUADB
608		95	250	273	274	255			QUADB
609		96	155	2	273	250			QUADB
610		97	2	154	272	273			QUADB
611		98	156	155	250	178			QUADB
612		99	178	250	255	254			QUADB
613		100	248	178	254	253			QUADB
614		101	177	248	253	252			QUADB
615		102	249	177	252	256			QUADB
616		103	251	249	256	257			QUADB
617		104	262	14	249	251			QUADB
618		105	14	159	177	249			QUADB
619		106	159	3	248	177			QUADB
620		107	3	156	178	248			QUADB
621		108	263	262	251	261			QUADB
622		109	261	251	257	258			QUADB
623		110	260	261	258	259			QUADB
624		111	264	263	261	260			QUADB
625		112	12	264	260	276			QUADB
626		113	276	260	259	265			QUADB
627		114	169	276	265	266			QUADB
628		115	271	169	266	267			QUADB
629		116	179	271	267	268			QUADB
630		117	270	179	268	269			QUADB
631		118	11	151	170	270			QUADB
632		119	151	5	271	179			QUADB
633		120	5	168	169	271			QUADB
634		121	168	12	276	169			QUADB
635		122	263	262	14	13			QUADB
636		123	264	263	13	12			QUADB
637		124	265	259	258	277			QUADB
638		125	277	258	257	256			QUADB
639		126	278	277	256	252			QUADB
640		127	279	278	252	253			QUADB
641		128	280	279	253	254			QUADB
642		129	275	280	254	255			QUADB
643		130	269	268	280	275			QUADB
644		131	268	267	279	280			QUADB
645		132	267	266	278	279			QUADB
646		133	266	265	277	278			QUADB
647	END								END
648	ENDDEOM								ENDDE

82
9212-SW
2.6.77

*** STARDYNE 3.0 INPUT ***

CARD IMAGE

```
CARD NO  ********************************************************************************  CARD TYPE
   649   EFCO 600 FRAME. NIAGARA MOHAWK FREQUENCY ANALYSIS.                                EFCO
   650   DYNAMIC    0         0         0                  15        00.0                  DYNAM
   651   OPTION                         1                            1                     OPTIO
   652   ENDMODEL                                                                          ENDMO
```

12177.92
MS-2126
29

600 FRAME. NIAGARA MOHAWK FREQUENCY ANALYSIS.

M O D A L E X T R A C T I O N D A T A

MODE NO	EIGENVALUE (OMEGA**2)	NATURAL FREQUENCY	PERIOD	GENERALIZED WEIGHT	MAX TRANSLATION MODE-DOF	VALUE	--- M O D A L W E I G H T S --- (GEN. WGT. * PARTICIPATION FACTORS**2) X1	X2	X3	
1	27522.2	26.404	.0379	54.4899	279-3	1.0000	.03806	.00164	63.91996	12.0
2	29387.1	27.283	.0367	40.7344	261-1	1.0000	44.21579	.00093	1.79812	12.0
3	51051.9	35.961	.0278	38.6295	277-3	1.0000	.07197	.02682	29.34739	12.0
4	55248.8	37.409	.0267	82.6052	249-2	1.0000	.00676	189.69163	.02089	12.0
5	55796.3	37.594	.0266	43.7105	248-2	1.0000	.00042	.98648	.00010	12.0
6	59791.4	38.917	.0257	75.3374	276-2	1.0000	2.82313	.01692	4.42018	12.0
7	73437.3	43.130	.0232	46.7139	280-3	1.0000	.19866	.00007	.43830	12.0
8	132938.	58.629	.0172	7.39668	32-3	1.0000	4.38223	1.77524	10.96066	12.0
9	181752.	67.852	.0147	1831.35	257-2	1.0000	112.98322	3286.08352	8.99860	12.0
10	196324.	70.519	.0142	20.5945	229-3	1.0000	620.72002	86.44359	1.31832	12.0
11	207758.	72.544	.0138	80.8219	229-3	1.0000	2698.99605	84.32632	203.19856	12.0
12	403588.	101.099	.0099	84.7904	234-3	1.0000	.14657	9.93256	267.06469	10.5
13	428614.	104.197	.0096	1059.49	234-3	1.0000	.66785	19.78074	33.72189	10.8
14	580823.	121.295	.0082	89.5074	177-2	1.0000	2.54083	.21841	.13095	6.5
15	644125.	127.734	.0078	775.996	31-3	1.0000	243.41353	13.66407	640.29786	6.7

THE FOLLOWING ARE APPROX. EIGENVALUES FOR WHICH MODES WERE NOT REQUESTED.

16	740898.	136.993	4.1
17	775780.	140.174	4.5
18	.102291E+07	160.960	1.6

LANCZOS REDUCED MATRIX SIZE (DOF) = 32
APPROX. MAXIMUM EIGENVALUE(OMEGA**2)= .122650E+09

NOTE THE LAST COLUMN IN THE TABLE ABOVE IS RELATED TO EIGENVALUE ACCURACY BOUNDS.

12177.92
MS-2126
30

▲ 5010.65

CALCULATION IDENTIFICATION NUMBER				PAGE 31
J.O. OR W.O. NO.	DIVISION & GROUP	CALCULATION NO.	OPTIONAL TASK CODE	
12177.92	EMD	MS-2126		

PART - II

Beams 600, 601, 602, 603 of the model in Part I are eliminated inorder to simulate asbuilt condition

PART - III

Piping model is obtained from Ref. 4. Sketchs of the piping are shown in Fig 1 thru 4. This includes the asbuilt routing of the piping from node 900 thru 912. The asbuilt information is attached in Attachment - 1. This model does not include modeling of the TRC SOVS See part IV for the modeling of the SOV.

STONE & WEBSTER ENGINEERING CORPORATION

CALCULATION SHEET

CALCULATION IDENTIFICATION NUMBER				
J.O. OR W.O. NO. 12177.92	DIVISION & GROUP EMD	CALCULATION NO. MS-2126	OPTIONAL TASK CODE	PAGE 32

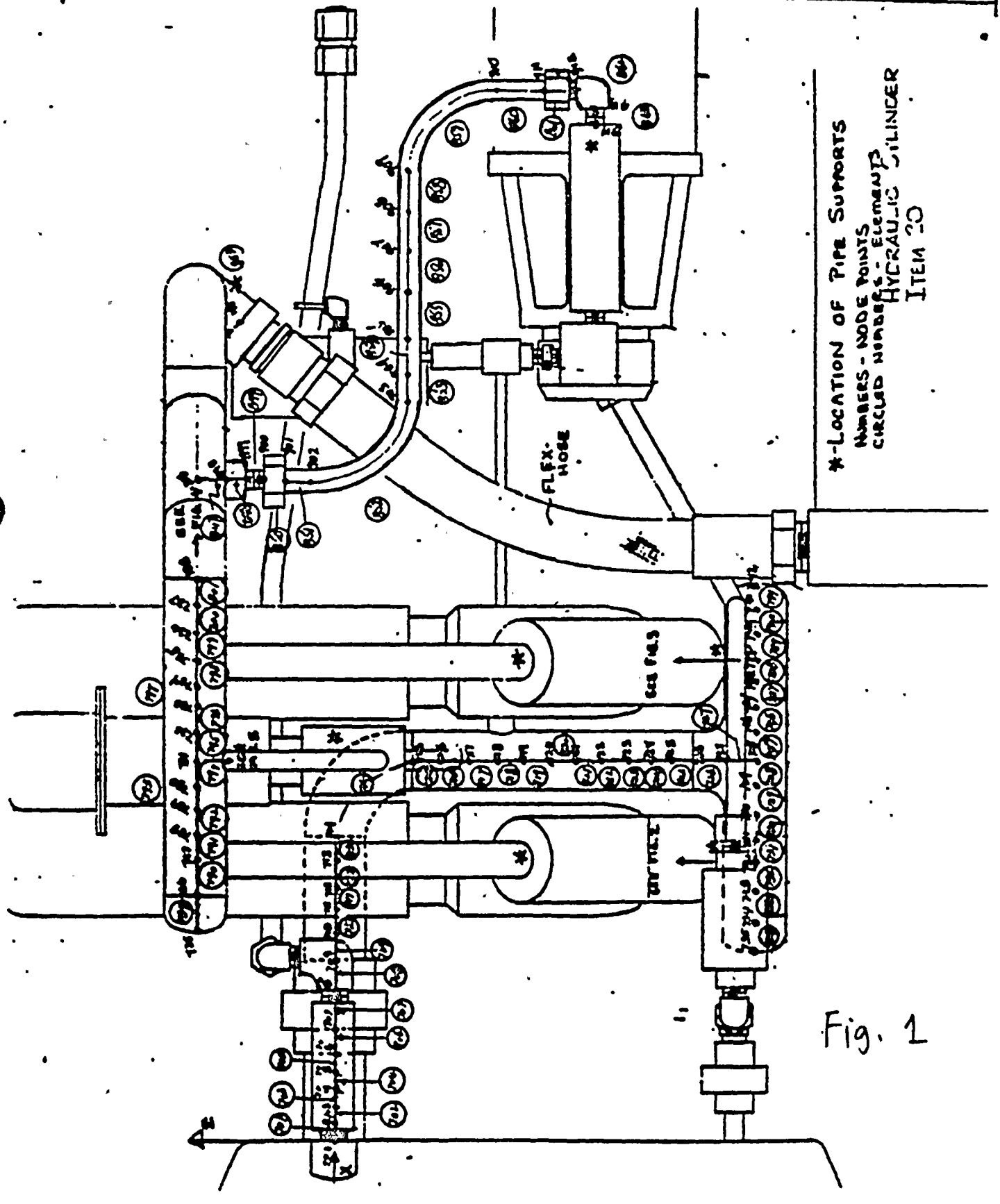

Fig. 1

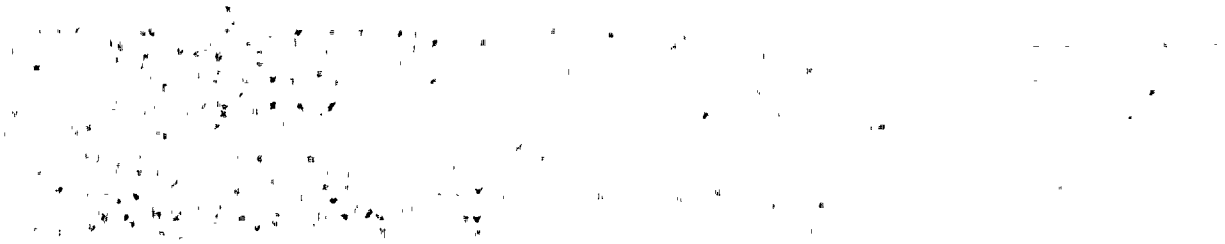

STONE & WEBSTER ENGINEERING CORPORATION

CALCULATION SHEET

A 9010.05

CALCULATION IDENTIFICATION NUMBER				PAGE 33
J.O. OR W.O. NO.	DIVISION & GROUP	CALCULATION NO.	OPTIONAL TASK CODE	
12177.92	EMD	MS-2126		

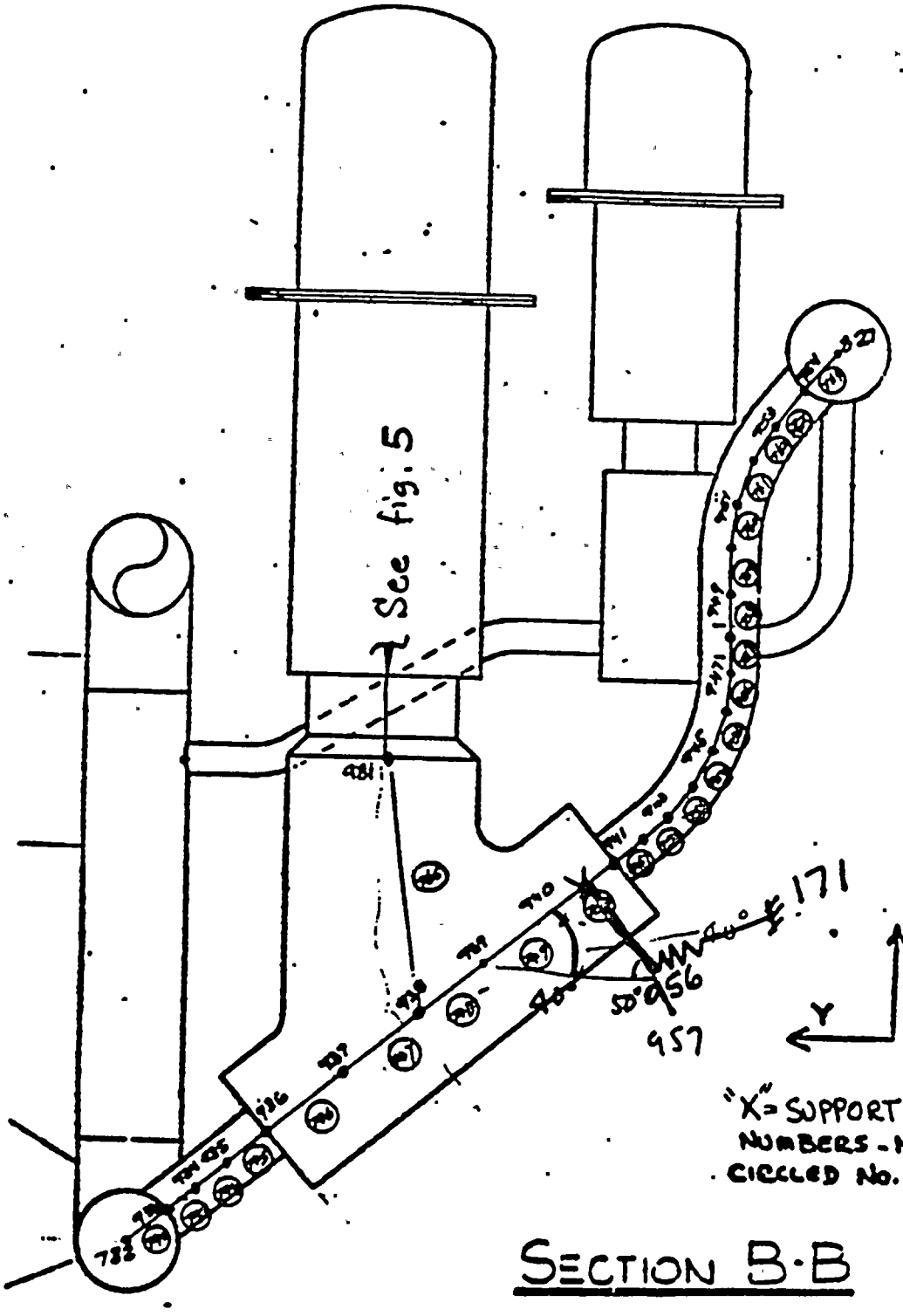

SECTION B-B

FIGURE 2

STONE & WEBSTER ENGINEERING CORPORATION

CALCULATION SHEET

CALCULATION IDENTIFICATION NUMBER				
J.O. OR W.O. NO.	DIVISION & GROUP	CALCULATION NO.	OPTIONAL TASK CODE	PAGE 34
12177.92	EMD	MS-2126		

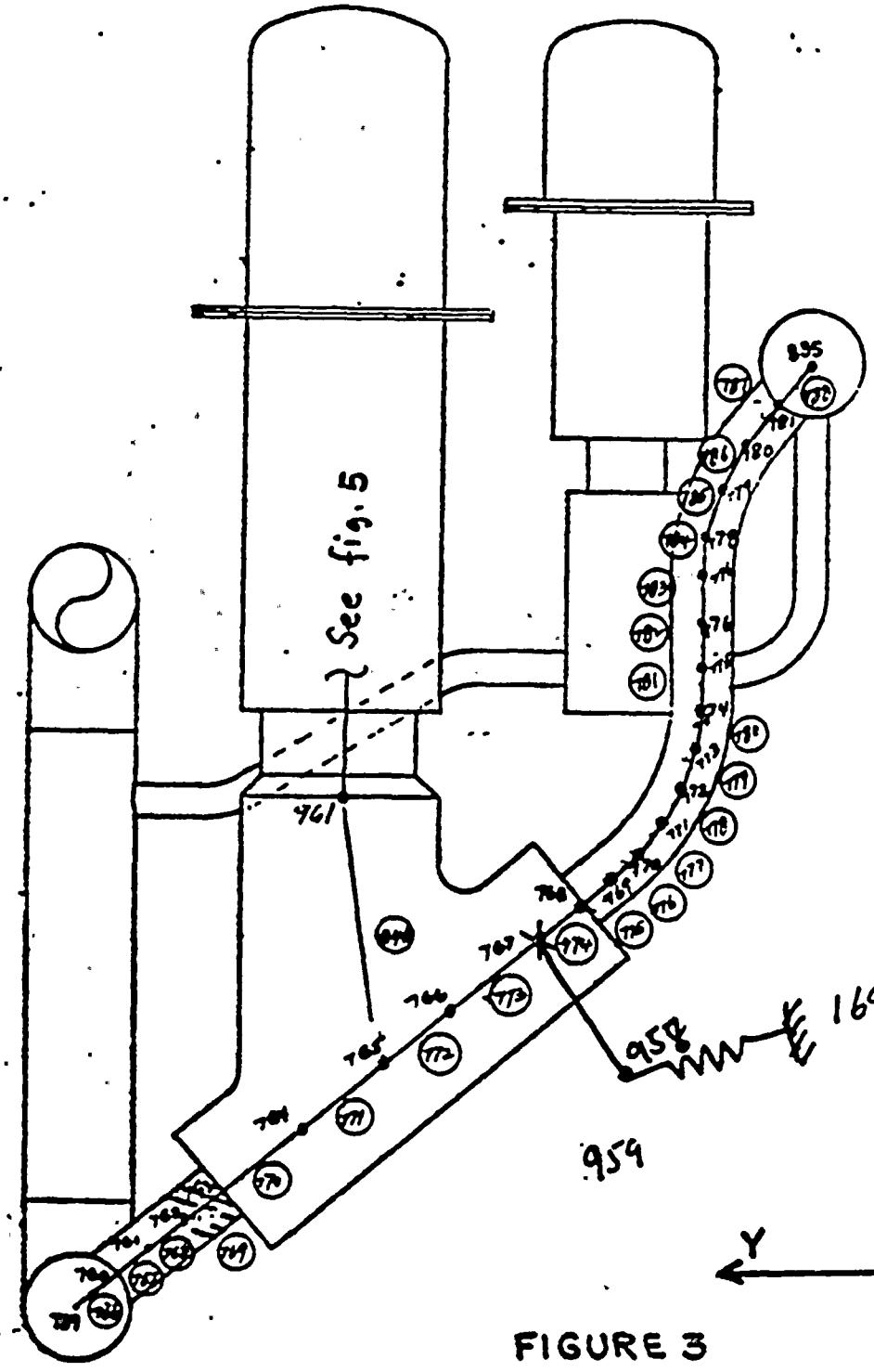

FIGURE 3

NUMBERS- NODE POINTS
CIRCLED NUMBERS- ELEMENTS
"X"-SUPPORT

SECTION B-B

STONE & WEBSTER ENGINEERING CORPORATION

CALCULATION SHEET

CALCULATION IDENTIFICATION NUMBER				
J.O. OR W.O. NO.	DIVISION & GROUP	CALCULATION NO.	OPTIONAL TASK CODE	PAGE 35
12177-92	EMD	MS-2126		

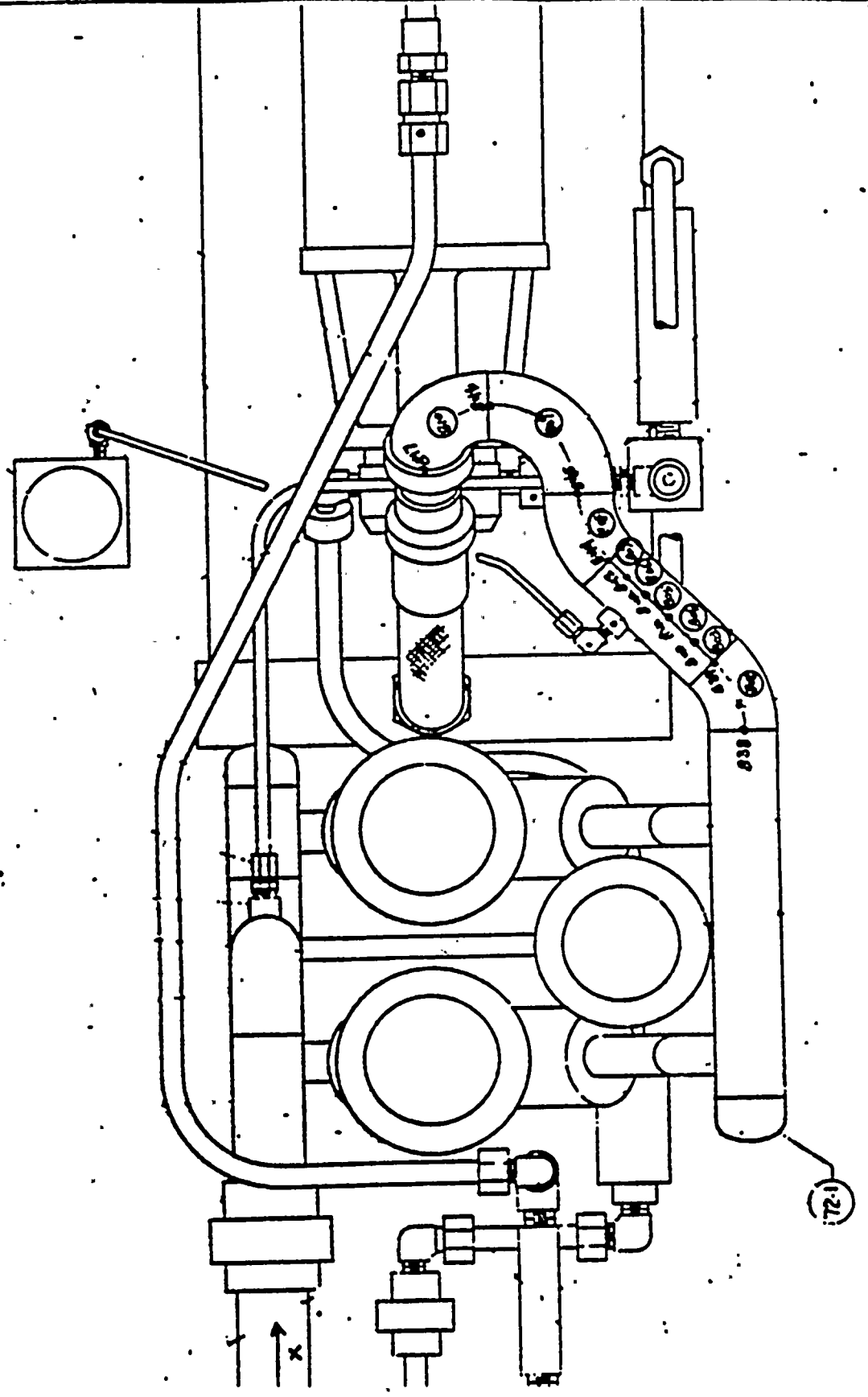

NUMBERS - NODE POINTS
CIRCLED NUMBERS - ELEMENTS

FIGURE 4 PLAN VIEW

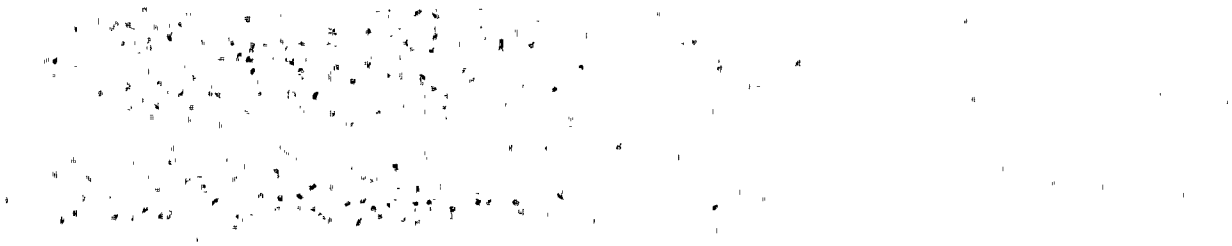

STONE & WEBSTER ENGINEERING CORPORATION

CALCULATION SHEET

▲ 5010.65

CALCULATION IDENTIFICATION NUMBER				PAGE 36
J.O. OR W.O. NO.	DIVISION & GROUP	CALCULATION NO.	OPTIONAL TASK CODE	
12177.92	EMD	MS-2126		

Part IV

Valve model is shown in fig. 5. This is added with part III and IV and

STONE & WEBSTER ENGINEERING CORPORATION

CALCULATION SHEET

A 5010.65

CALCULATION IDENTIFICATION NUMBER				
J.O. OR W.O. NO.	DIVISION & GROUP	CALCULATION NO.	OPTIONAL TASK CODE	PAGE 37
12177.92	EMD	MS-2126		

Beam Properties:- (See fig.5 for beam property numbr)

(1) $I_{tube} = \frac{\pi}{64}[1.727^4 - 1.378]^4 = 0.2597$

$A = 0.85\ in^2$

$I_{internal} = \frac{\pi}{64}[1.362^4 - .562^4] = 0.164$

$A = \frac{\pi}{4}[1.362^2 - .562^2] = 1.209$

$\therefore I = I_{tube} + I_{int} = 0.2597 + .164 = 0.4237\ in^4$

$A = 2.059\ in^2$

(2) $I = \frac{\pi}{64}[2.25^4 - 1.739^4] = 0.809\ in^4$

$A = \frac{\pi}{4}[2.25^2 - 1.739^2] = 1.6\ in^2$

(3) $I = \frac{\pi}{64}[5^4 - 4.625^4] = 8.219\ in^4$

$A = \frac{\pi}{4}[5^2 - 4.625^2] = 2.83\ in^2$

(4) $I = \frac{\pi}{64}[5^4 - 4.76^4] = 5.48\ in^4$

$A = 1.84\ in^2$

(5) Coil to tube end connection is modeled as a rigid beam.

(6) Head Cover is modeled as a Pipe of OD = 5" t = .125"

(7) Bracket is modeled as a spring mass.

From ref. 11, (P 8,9 of App B) Length = 6.255" mass = 0.435 lb freq = 71 Hz. (Ref.3, App II to 3556 Pg 8.19)

STONE & WEBSTER ENGINEERING CORPORATION

CALCULATION SHEET

▲5010.65

CALCULATION IDENTIFICATION NUMBER				PAGE 38
J.O. OR W.O. NO. 12177.92	DIVISION & GROUP EMD	CALCULATION NO. MS-2126	OPTIONAL TASK CODE	

$$I = \frac{W}{g} \cdot \frac{L^3}{3E} (2\pi f)^2$$

$$= \frac{0.435 \times (6.255)^3}{3 \times 28.3 \times 10^6 \times 386.4} (2\pi \times 71)^2 = .000646 \text{ in}^4$$

$A = 10.0$ arbitrarily.

(8) Bonnet tube extention is modeled arbitrarily as a rigid member (Nodes 4 to 11)

(9) Valve body (node 15 to 1) is modeled arbitrarily as a rigid member of

$I = 10 \text{ in}^4$

$A = 10 \text{ in}^2$

(10) Member # 1 (From node 1 to 13) has special properties taking into consideration the effect of the thin end of the fixed core.

$$I_{core} = \frac{\pi}{64} [1.362^4 - 1.13^4] = 0.0889 \text{ in}^4$$

total $I = 0.0889 + 0.2597 = 0.3486 \text{ in}^4$

$A = 1.304 \text{ in}^2$

STONE & WEBSTER ENGINEERING CORPORATION

CALCULATION SHEET

▲5010.66

CALCULATION IDENTIFICATION NUMBER				PAGE 39
J.O. OR W.O. NO. 12177.92	DIVISION & GROUP EMD	CALCULATION NO. MS-2126	OPTIONAL TASK CODE	

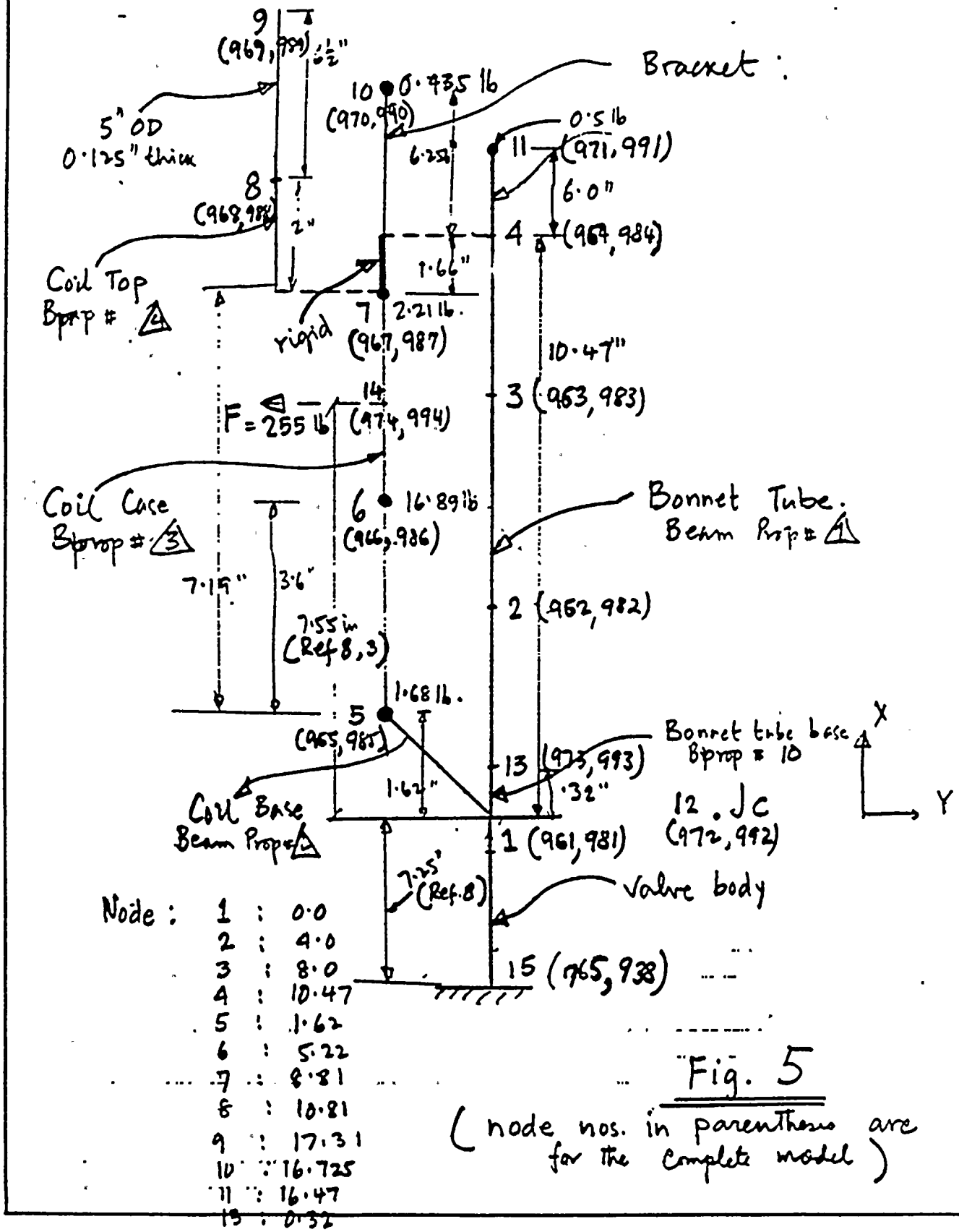

Node :
1 : 0.0
2 : 4.0
3 : 8.0
4 : 10.47
5 : 1.62
6 : 5.22
7 : 8.81
8 : 10.81
9 : 17.31
10 : 16.725
11 : 16.47
13 : 0.32

Fig. 5

(node nos. in parenthesis are for the complete model)

Total Wt. of Coil assembly = 28 lb (Fig. 7)

Wt. of part 1 = $0.283 \times 2.592 = 0.73$ lb

" " " 2 = $0.283 \times .38 \times \frac{\pi}{4}[5^2 - 2.25^2] = 1.66$ lb

" " " 3 = $0.283 \times 2.83 \times (7.19 - .36) = 5.45$ lb

" " " 4 = $0.283 \times 0.54 \times \frac{\pi}{4}(4.625^2 - 1.75^2) = 2.21$ lb

" " " 5 = $0.283 \times 2 \times 1.84 = 1.04$ lb

(Part #s are in Fig. 7)

Total Wt = 11.11 lb

∴ Wt. of copper = 28 − 11.11 = 16.89 lb

(lumped mass @ node 6)

Results of the computer runs are listed below:

Node #	Deflection due to Static Pull of 255 @ 14	Static deflection due to 10 g at all nodes
Node 2	0.86×10^{-3}	0.116×10^{-2}
Node 3	0.169×10^{-2}	0.222×10^{-2}
Node 4	0.2198×10^{-2}	0.285×10^{-2}

∴ equivalent g = $\frac{0.86 \times 10^{-3}}{.116 \times 10^{-2}} \times 10 = 7.4$ (node 2)

$\frac{0.169 \times 10^{-2}}{.222 \times 10^{-2}} \times 10 = 7.6$ (node 3)

$\frac{0.2198 \times 10^{-2}}{0.285 \times 10^{-2}} \times 10 = 7.66$ (node 4)

Therefore,

Deflection of the bonnet tube due to a static pull of 255 lb is same as the deflection caused by an acceleration of 7.4 g applied at all the nodes.

From ref. 3, static operability is demonstrated for a static pull test of 255 lb. Therefore, the valve is operable for a 7.4g load at all the nodes.

Fig. 6 thru 10 are obtained from Target Rock Corporation thru the trip report (attachment-5)

P42

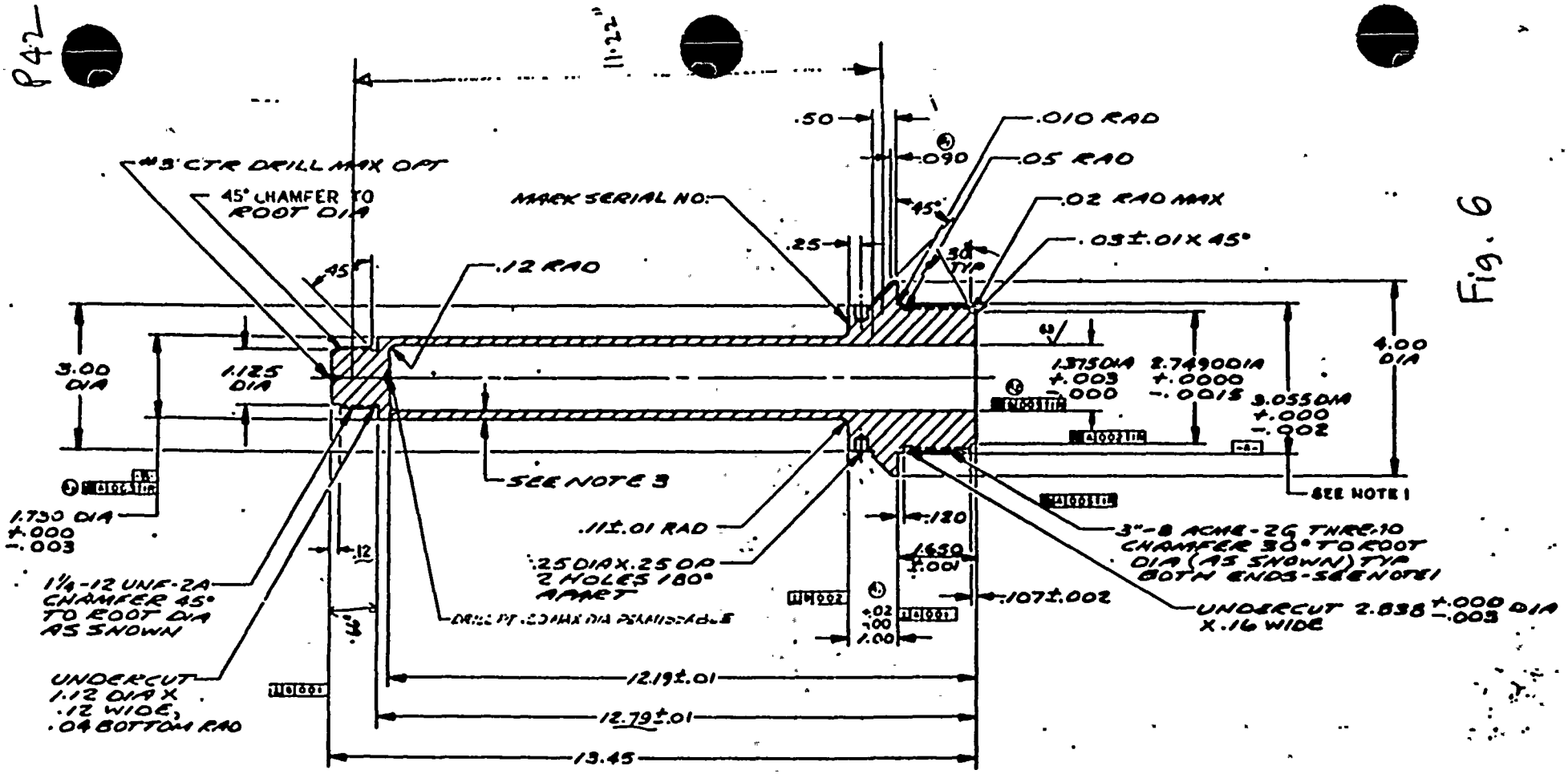

Fig. 6

12177.92
MS-2126

12177.92
MS-2126
P.43

Fig. 7

PART NO.	A DIA	B DIA	C DIA	D DIA	E DIM	F DIM	G DIA
300990-1	1.490	1.495	1.850	2.25	1.62	10.81	1.685
300990-2	1.815	1.820	1.995	2.50	1.62	10.81	1.810
300990-3	1.734	1.739	1.890	2.25	1.62	10.81	1.730
300990-4	1.734	1.739	1.890	2.25	1.12	10.81	1.730

Wt = 28 lb

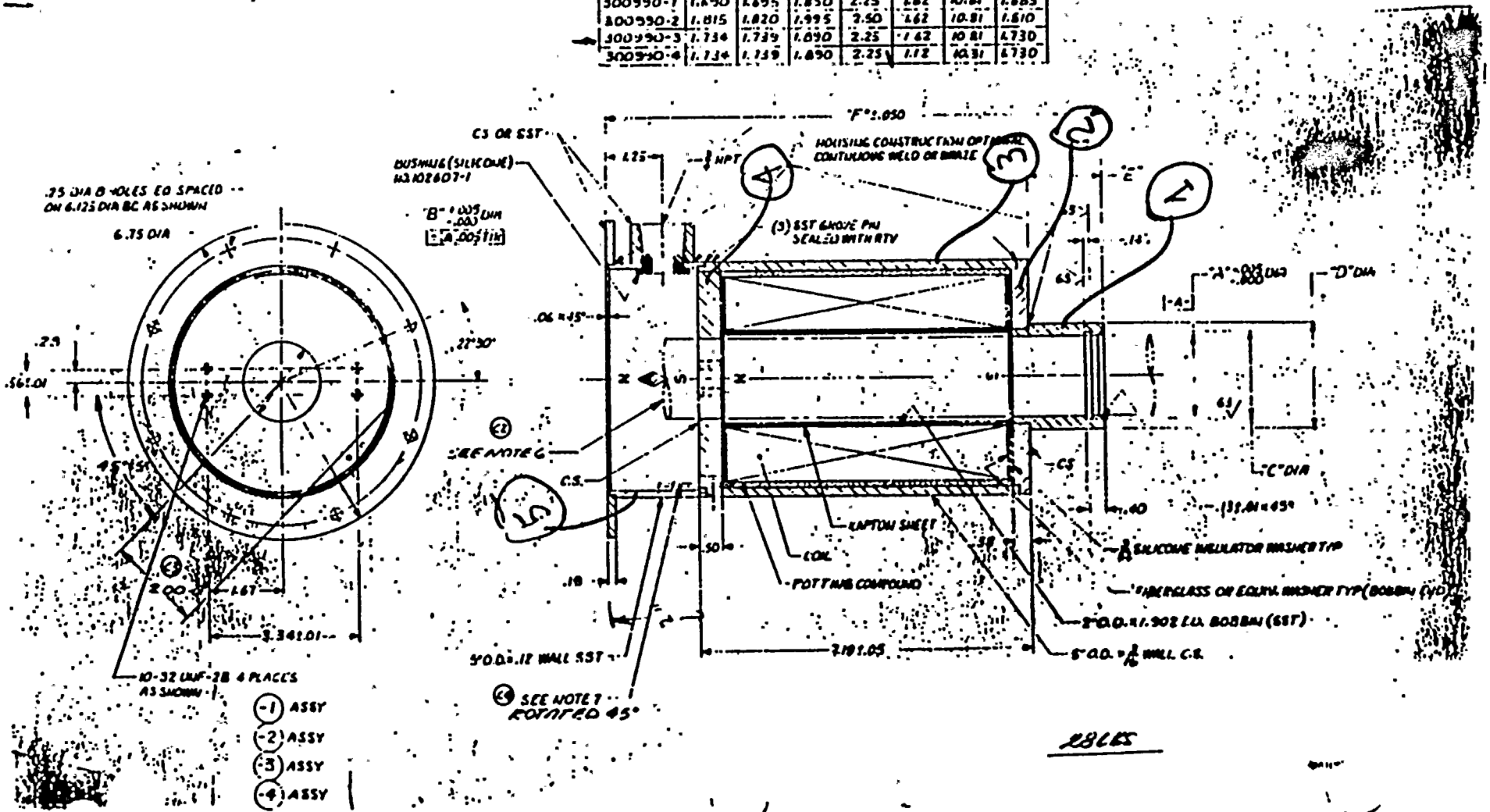

12177.92
MS-2126
P.44

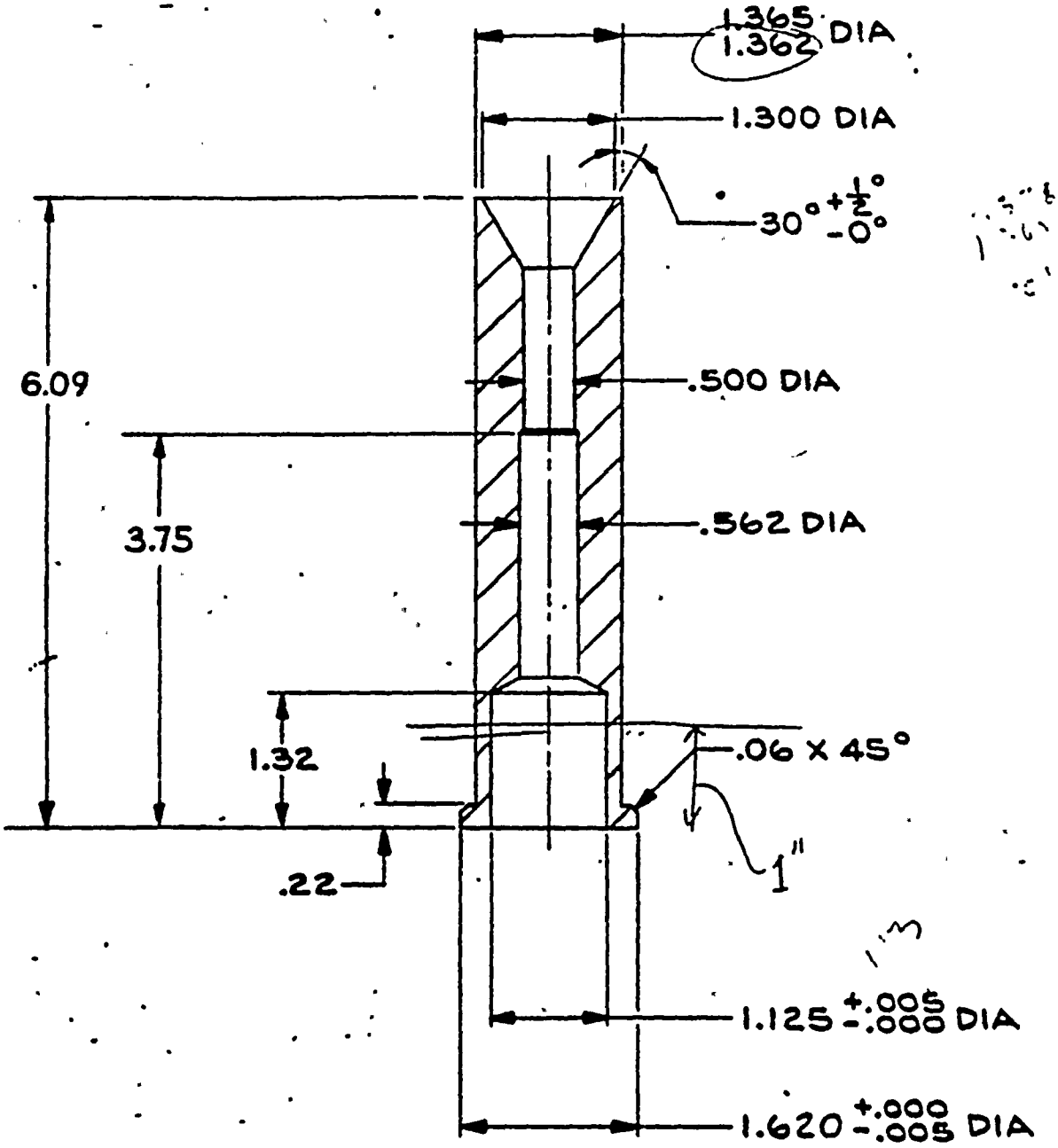

Fig. 8

12177.92
MS-2126
P.45

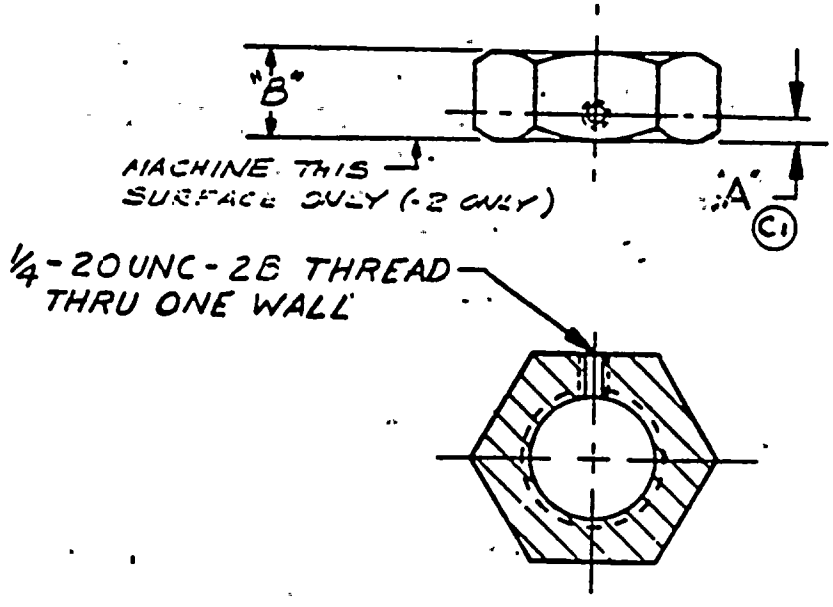

Fig. 9

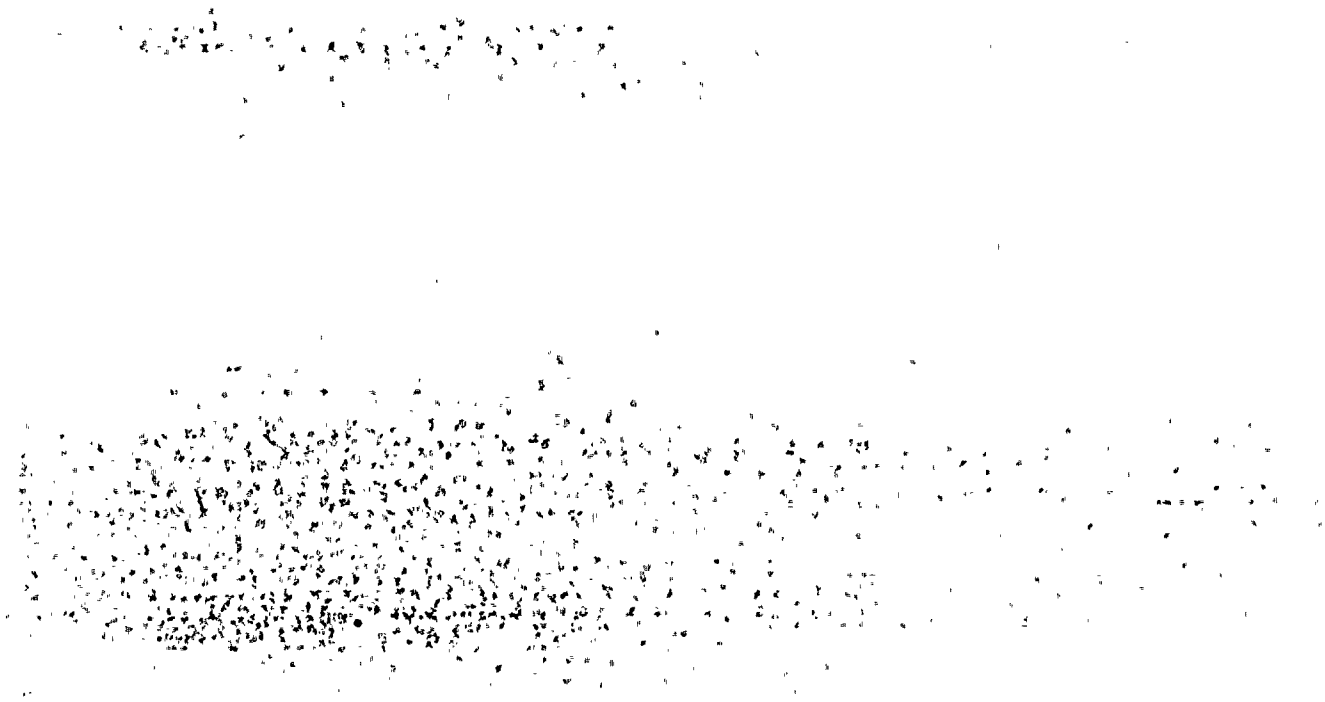

12177.92
MS-2126
P.46

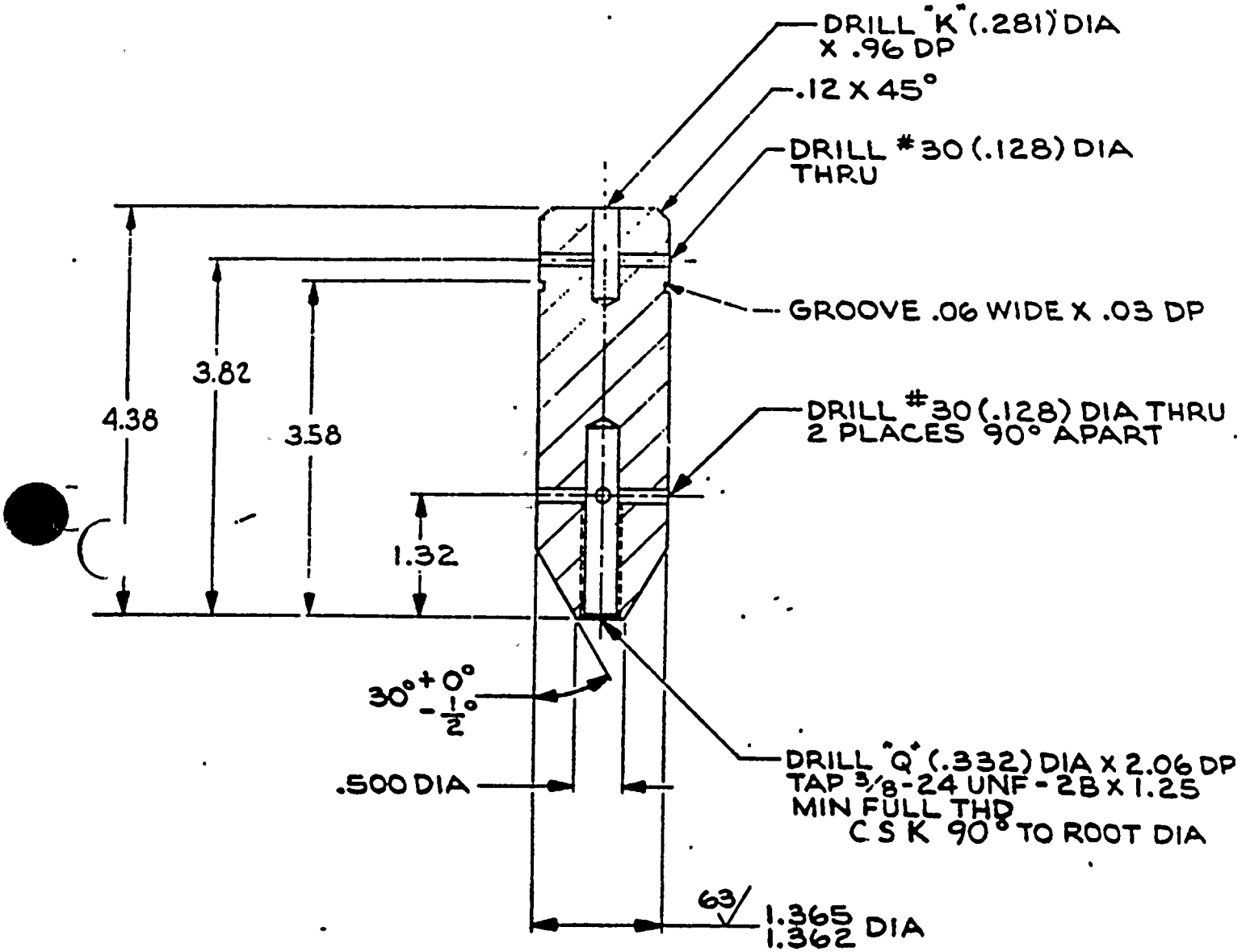

Fig. 10

Part V.

Combined Model:

Actuator, piping and the valve are combined in a single model.

Dynre4 of STARDYNE Computer code is used for the response spectrum analysis. The response spectra obtained from the ref. 2 is applied at the actuator mounting bracket. These spectra are only for faulted Cond'n.

Results of the analysis are tabulated next page.

The whole purpose of this analysis is to determine the acceleration at the SOV location.

STONE & WEBSTER ENGINEERING CORPORATION

CALCULATION SHEET

A 5010.85

CALCULATION IDENTIFICATION NUMBER				
J.O. OR W.O. NO. 12177.92	DIVISION & GROUP. EMD	CALCULATION NO. MS-2126	OPTIONAL TASK CODE	PAGE 48

Max Accelerations - Combined Actuator/Piping/Valve Model

		Response due to RRS (Long/Vert)			Response due to TRS (Long/Vert)			Response due to RRS (All three direction)		
		X	Y	Z	X	Y	Z	X	Y	Z
1st Valve:	NODE ↓									
℄	765	4.4	4.22	4.51	8.28	9.2	9.61	4.81	6.94	5.9
C.G.	961	6.2	3.9	3.5	12.2	7.85	8.12	6.9	10.7	4.6
Load Appl. Pt	974	7.68	6.3	3.49	15.45	12.23	8.12	9.6	17.51	4.6
2nd Valve:	NODE ↓									
℄	938	4.54	3.39	4.0	8.58	7.97	8.79	4.97	7.03	4.83
C.G.	981	6.7	3.68	5.0	13.1	8.46	10.52	7.5	8.6	5.5
Load Appl.	994	8.6	5.68	5.05	17.18	12.27	10.53	10.77	11.55	5.54

STONE & WEBSTER ENGINEERING CORPORATION

CALCULATION SHEET

▲5010.65

CALCULATION IDENTIFICATION NUMBER				
J.O. OR W.O. NO.	DIVISION & GROUP	CALCULATION NO.	OPTIONAL TASK CODE	PAGE 49
12177.92	EMD	MS-2126		

The actuator assembly is too complex to come up with a reasonable result from a finite element model. The accelerations obtained in the previous page may differ considerably from the real life situation. Only thing we have at our disposal is the input and the output response spectra for various locations of the actuator. Test results should agree with the results obtained from the mathematical model. A factor is determined which when multiplied by the analyzed result gives the true result at least for these particular locations i.e. two solenoid valves.

STONE & WEBSTER ENGINEERING CORPORATION

CALCULATION SHEET

▲ 5010.65

CALCULATION IDENTIFICATION NUMBER				PAGE 50
J.O. OR W.O. NO.	DIVISION & GROUP	CALCULATION NO.	OPTIONAL TASK CODE	
12177.92	EMD	MS-2126		

Relation between Analysis and Test Results

Ref. 1 page 48 identifies 3 accelerometer locations # 25, 26 and 27 placed right on the SOV.

Faulted Long. TRS is shown in page 566 of ref. 1

" Vert. TRS " " " " 567 of ref. 1

Response due to these TRS are given in Page 592 - 594.

Long. RESPONSE is shown in page 594

Vert. " " " " 592

Lateral " " " " 593

How to obtain the ZPA of the responses above?

It is conservative to assume 15 g (at 200 Hz) but this is not the true ZPA.

Following methods are applied to find out the true ZPA which is less conservative.

1) Wyle Lab performed a test and based on that ZPA = $15 \times \frac{11.3}{16} = 10.6$ in longitudinal direction. Telecons are attached in attachment - 3.

2) Based on ref. 6 reponse spectrum. at the base of the SOV is generated from the know frequencies and mode shapes of the complete actuator model. This is plotted in fig. 11. The response maches closely with the tested response but it produces a ZPA of only 5.0 g instead of 15.0 g shown in the test.

Based on these investigations ZPA in longitudinal direction is assumed to be equal to 10.6 g.

Similarly ZPA in Lateral direction $= 10 \times \frac{11.3}{16} = 7.06$ g
(P. 593 of ref. 1)

But by analysis these values are calculated and are found to be 6.28 g and 9.2 g respectively.

There a factor (f_i) is applied to the calculated value to obtain the correct value.

$$\therefore f_i = \frac{\text{ZPA obtained in Test}}{\text{ZPA obtained by analysis}}$$

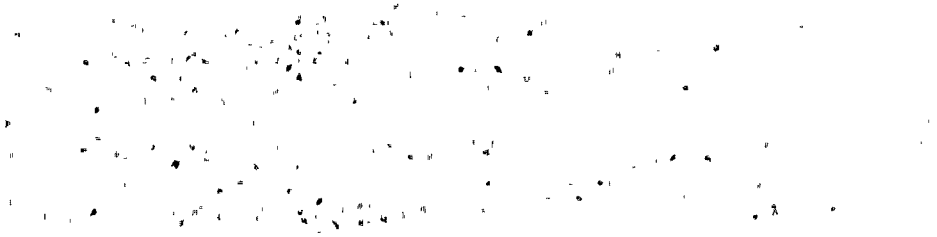

STONE & WEBSTER ENGINEERING CORPORATION

CALCULATION SHEET

A 5010.65

CALCULATION IDENTIFICATION NUMBER				PAGE 52
J.O. OR W.O. NO.	DIVISION & GROUP	CALCULATION NO.	OPTIONAL TASK CODE	
12177.92	EMD	MS-2126		

Calculation of f_1 :

1st Valve:

X direction — $\frac{10.6}{8.28} = 1.28$

Y " — $\frac{7.06}{9.2} = .767$

2nd Valve:

X direction — $\frac{10.6}{8.58} = 1.24$

Y direction — $\frac{7.06}{7.97} = 0.886$

∴ Maximum Accln at load application point:

X direction : $1.24 \times 10.77 = 13.35$ g

Y " : $.767 \times 17.51 = 13.43$ g

∴ Required Static Load = $\frac{13.35 \times 255}{7.4} = 4601$ lb

Used 5001b: (Conservative)

12177.92
MS-2126
P.53

FULL SCALE SHOCK SPECTRUM (g Peak)

1.0 □ 10 □ 100 ■ 1000□

DAMPING [3 %]

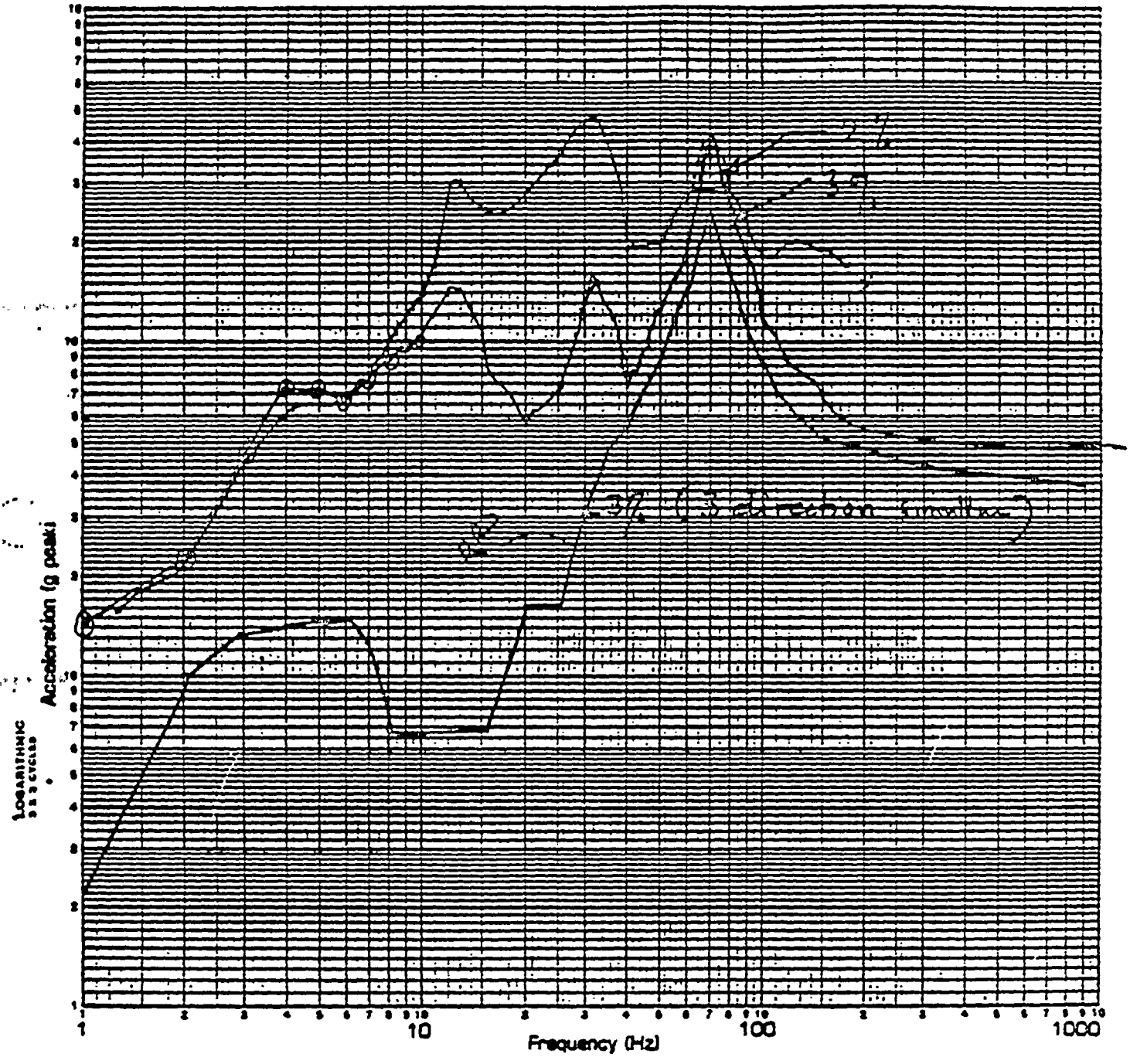

SPECIMEN ——— LOCATION NO. 27 LONG

AXIS LONG/V TEST RUN NO. 11

Fig. 11

STONE & WEBSTER ENGINEERING CORPORATION

CALCULATION SHEET

A 5010.85

CALCULATION IDENTIFICATION NUMBER				PAGE P54
J.O. OR W.O. NO. 12177.92	DIVISION & GROUP EMD	CALCULATION NO. MS-2126	OPTIONAL TASK CODE	

PART : VI

The components added in the revised "hydraulic" design of the actuator are: (Ref. 7)

1. Accumulator — wt 101 lb ($2\frac{1}{2}$ gal)
2. Pump. Motor — wt. 60 lb (assumed)
3. Pressure Switch
4. flow control valve } negligible wt.
5. Check Valve.

Therefore total wt. added = 161 lb.

The components removed are : (Ref. attachment-2)

1. Blocking Lever, Door, trip solenoid and associated hardware.
   — wt 50 lb (assumed)

∴ percentage increase in wt

$$\simeq \frac{161 - 50}{14500 \text{ (Ref. 1)}} = 0.7655\%$$

This will change freq by $\sqrt{1.007655}$, ie by ±38 %

This is too small to be considered.

PAGE

ENGINEERING MECHANICS DIVISION
COMPUTER LOG
##########

CALCULATION NUMBER: 12177-NM(U)-MS-2126 S&M COMP. AUTH#: 3395 CHARGE NUMBER: ### OTHER:

PROGRAM NAME	LIBRARY REF. NUMBER	VERSION / LEVEL	RUN NO.	JOB SUBMITTAL NUMBER	FICHE LOC SECT	FICHE LOC PAGE	PREPARED BY: NAME	PREPARED BY: DATE	COMPUTER USED ##	COMMENTS: OTHER PERTINENT INFORMATION
CDC	ST-330	Feb01/	1	AMF6 JCS	P		(CROSBY)	9/24/86	Gilnet # 962	Original Crosby HQR
		84 H	2	UKW	A	6	Nrigoji	9/24/86	Gilnet # 1054	Complete actuator support on pipe.
			3	UYC	G	5	Nrigoji P. SIVEEVEKH	9/24/86	Gilnet # 1057	Dynre4 for Rim #2
			4	TJL	E	7	(CROSBY)	9/24/86	Gilnet # 976	Original piping HQR
			5	BHM	1	4	Nrigoji	9/26/86	Gilnet #1081	Combined model 2 supports · HQR/D4
			6	YUY	2 9	9	P. SIVEEVEKH	10/6/86	Gilnet # 1214	As built piping · Revised run # 4
			7	CHL	1	8	Nrigoji	10/10/86	Gilnet #1297	Complete model with anchor – HQR/D4
			8	AUL		3	Nrigoji	10/15/86	Gilnet # 1358	Final Complete model HQR/D4
			9	FEI		1	Nrigoji	10/16/86	Gilnet # 1374	Static run for Valve only
			10	FDR		2	Nrigoji	10/16/86	Gilnet # 1373	HQR for Valve only
CDC	ST-330	Feb01/ 84H	11	AEL		10	Nrigoji	10/18/86	Gil # 1414	DYNRE4 mode by mode for run # 8

= COMPUTER GENERATED JOB SUBMITTAL NUMBER
= COMPUTER USED (SHEC OR OTHER)
= IF OTHER THAN SHEC COMPUTER IS USED

P.55

STONE & WEBSTER ENGINEERING CORPORATION

CALCULATION SHEET

▲5010.65

CALCULATION IDENTIFICATION NUMBER				PAGE 56
J.O. OR W.O. NO.	DIVISION & GROUP	CALCULATION NO.	OPTIONAL TASK CODE	
12177.92	EMD	MS-2126		

ATTACHMENT - 1

STONE & WEBSTER ENGINEERING CORPORATION

12177.92
MS-2126
P.57

AGENT FOR NIAGARA MOHAWK POWER CORPORATION

NINE MILE POINT UNIT #2 P.O. BOX #63 LYCOMING, NEW YORK 13093

TELECOPY NUMBERS (315) 342-2057 & (315) 343-9275 RAPICOM 3300

TELECOPY REQUEST

PLEASE SEND THE ATTACHED DOCUMENT VIA TELECOPY

TO: P. STIRCEVICH CHOC 5G X3640

TELECOPY NUMBER:

FROM: A. ISSA X4403 LOCATION: JEG 2

NO OF PAGES: 1

DATE: 10-14-96

SUBJECT: 50 V's

OPERATOR:

TIME TRANSMITTED:

RUSH
PLEASE CALL
X3640

IF THERE ARE ANY PROBLEMS RECEIVING THIS TRANSMISSION, OR TO CONFIRM RECEIPT, PLEASE CONTACT (315) 349-7033.

STONE & WEBSTER ENGINEERING CORPORATION

CALCULATION SHEET

CALCULATION IDENTIFICATION NUMBER				PAGE 58
J.O. OR W.O. NO. 12177.92	DIVISION & GROUP EMD	CALCULATION NO. MS-2126	OPTIONAL TASK CODE	

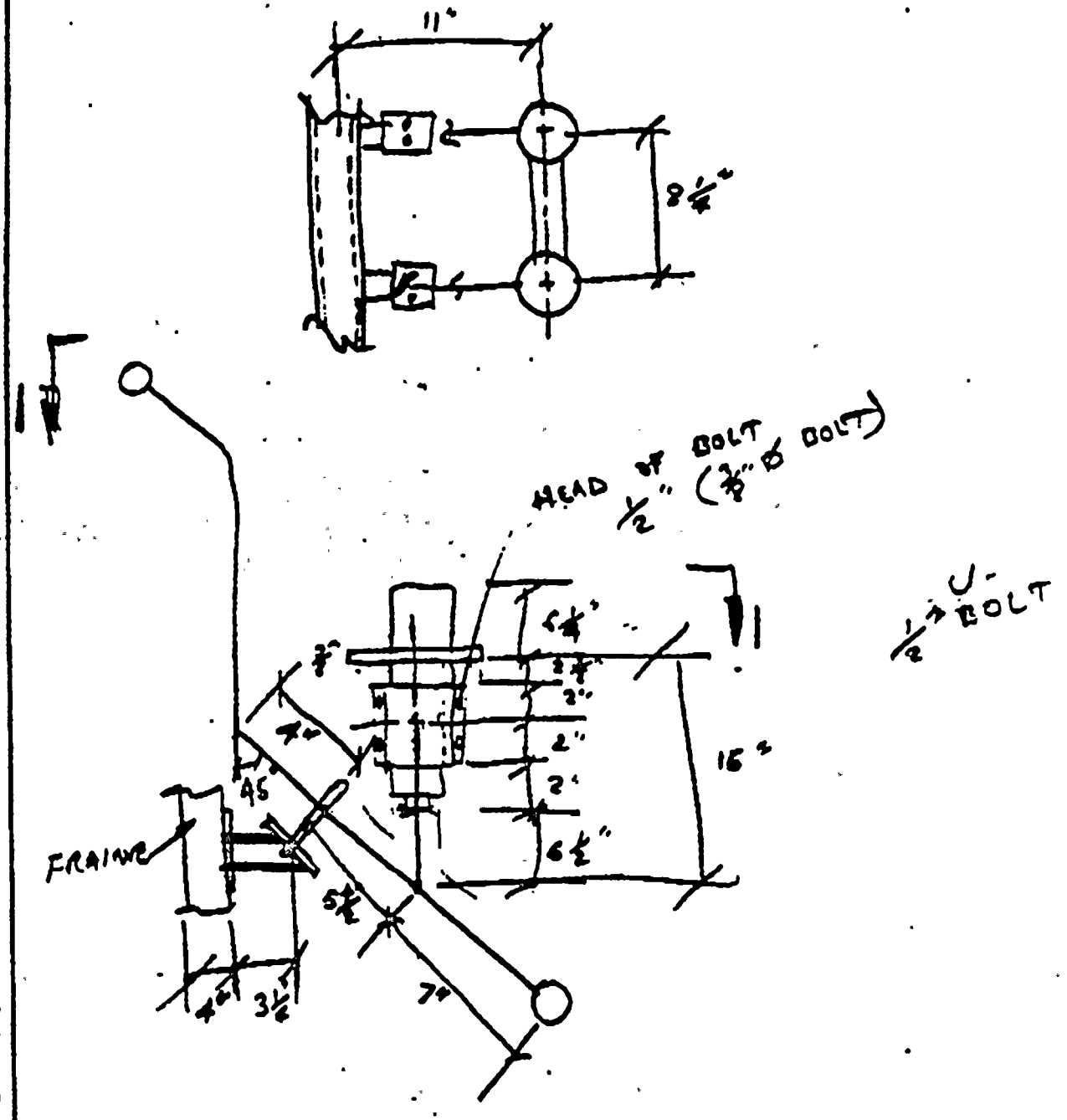

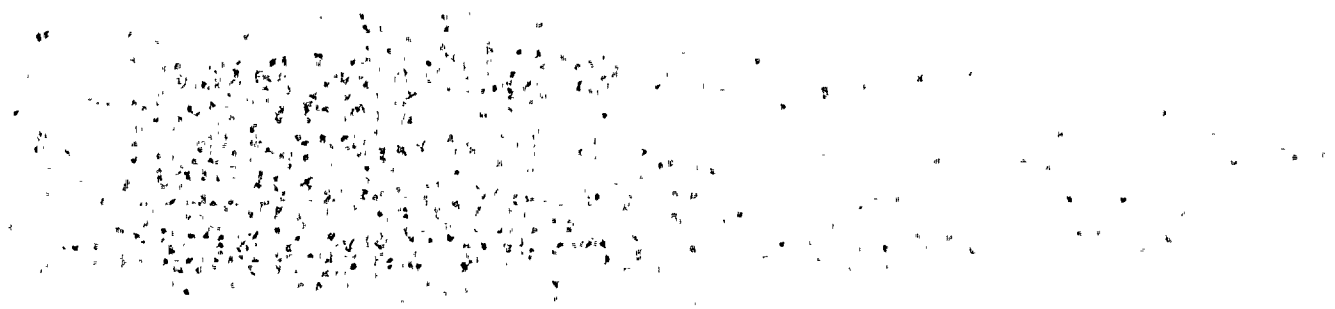

12177.92
MS-2126
P.59

STONE & WEBSTER ENGINEERING CORPORATION

AGENT FOR NIAGARA MOHAWK POWER CORPORATION

NINE MILE POINT UNIT #2 P.O. BOX #63 LYCOMING, NEW YORK 13093

TELECOPY NUMBERS (315) 342-2057 & (315) 343-9275 RAPICOM 3300

TELECOPY REQUEST

PLEASE SEND THE ATTACHED DOCUMENT VIA TELECOPY

TO: Phil Stepcevich CHOL 5 Green

TELECOPY NUMBER:

FROM: Bob Lloyd x7440 LOCATION: NMP2

NO OF PAGES: 1

DATE: 10-3-86

SUBJECT: MSIV Actuator Port

OPERATOR:

TIME TRANSMITTED:

IF THERE ARE ANY PROBLEMS RECEIVING THIS TRANSMISSION, OR TO CONFIRM RECEIPT, PLEASE CONTACT (315) 349-7033.

12127-92-
MS-2126
P.60

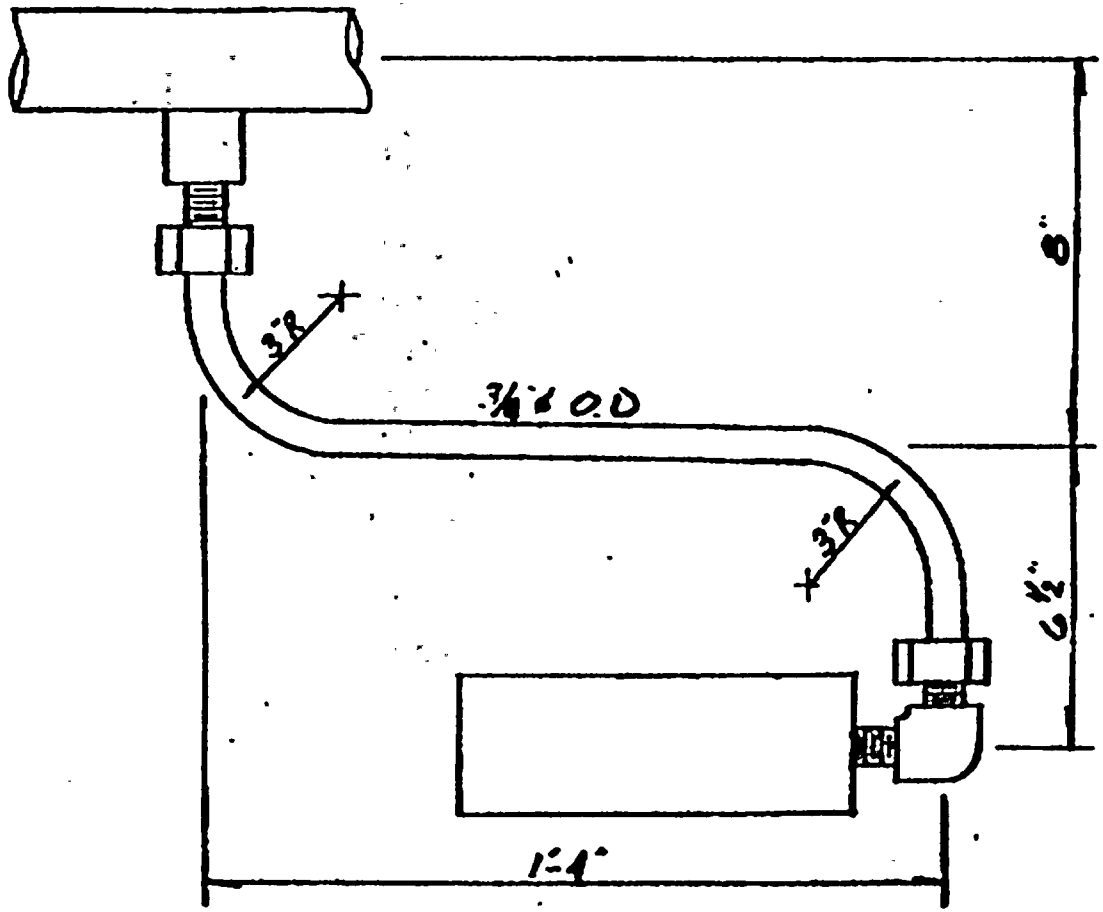

Bid Level - 7410
10-3-06

STONE & WEBSTER ENGINEERING CORPORATION

12177.92
MS-2126
61

AGENT FOR NIAGARA MOHAWK POWER CORPORATION

NINE MILE POINT UNIT #2 P.O. BOX #63 LYCOMING, NEW YORK 13093

TELECOPY NUMBERS (315) 342-2057 & (315) 343-9275 RAPICOM 3300

TELECOPY REQUEST

PLEASE SEND THE ATTACHED DOCUMENT VIA TELECOPY

TO: P. STIPCEVICH CHOC/SG x3640

TELECOPY NUMBER:

FROM: A. ISSA X4403 LOCATION: SEG 2

NO OF PAGES: 2

DATE: 10-14-86

SUBJECT: SOV's CLAMPS

OPERATOR:

TIME TRANSMITTED:

RUSH
PLEASE CALL
x3640

IF THERE ARE ANY PROBLEMS RECEIVING THIS TRANSMISSION, OR TO CONFIRM RECEIPT, PLEASE CONTACT (315) 349-7033.

CALCULATION SHEET

CALCULATION IDENTIFICATION NUMBER				PAGE 62
J.O. OR W.O. NO.	DIVISION & GROUP	CALCULATION NO.	OPTIONAL TASK CODE	
12177.92	EMD	MS-2126		

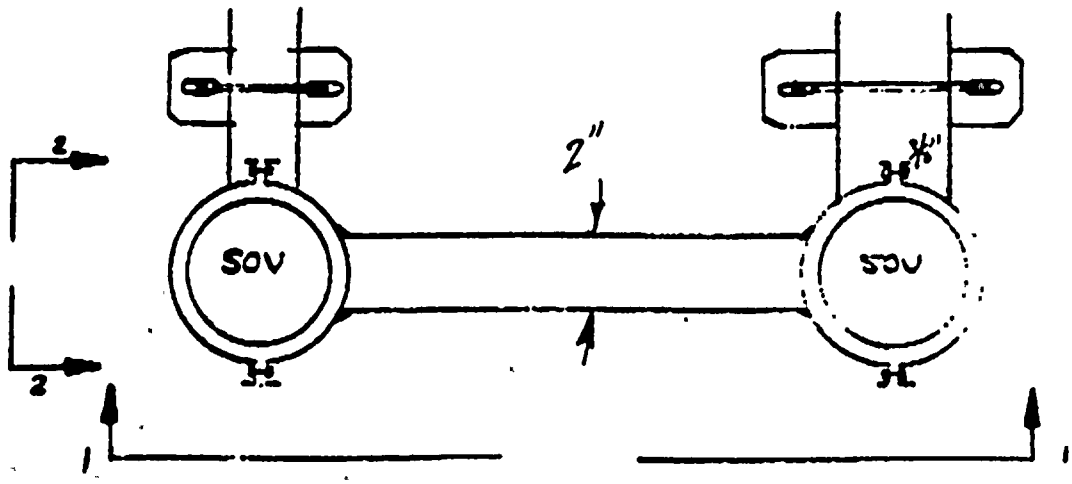

PLAN VIEW

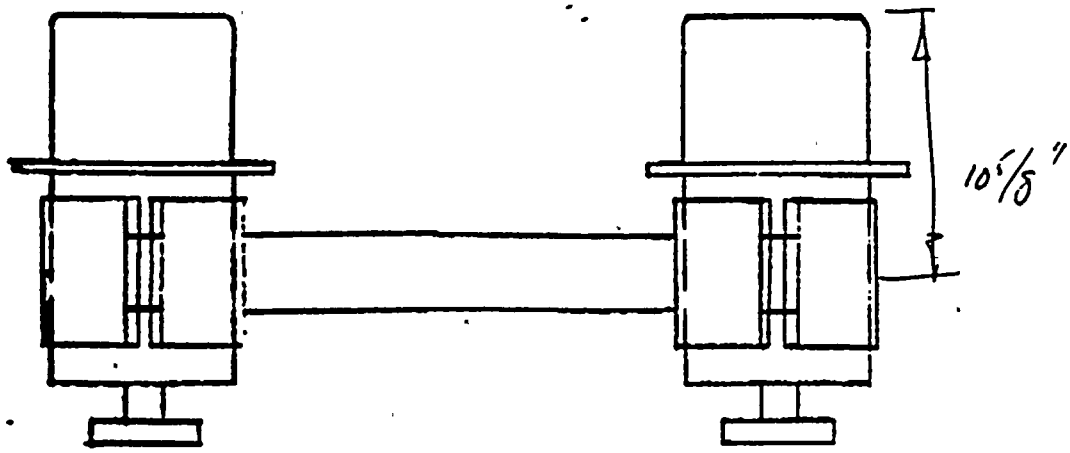

SECTION 1-1

STONE & WEBSTER ENGINEERING CORPORATION

CALCULATION SHEET

CALCULATION IDENTIFICATION NUMBER				
J.O. OR W.O. NO.	DIVISION & GROUP	CALCULATION NO.	OPTIONAL TASK CODE	PAGE 63
12177.92	EMD	MS-426		

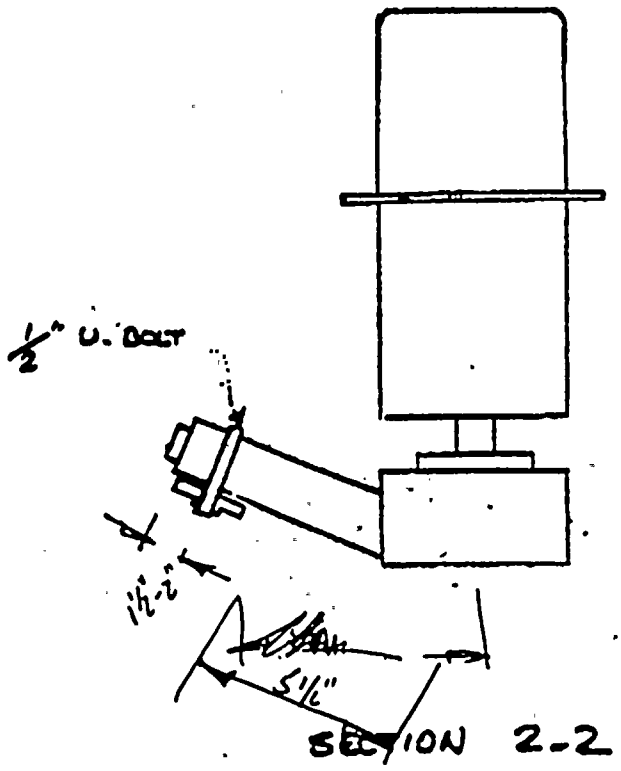

SECTION 2-2

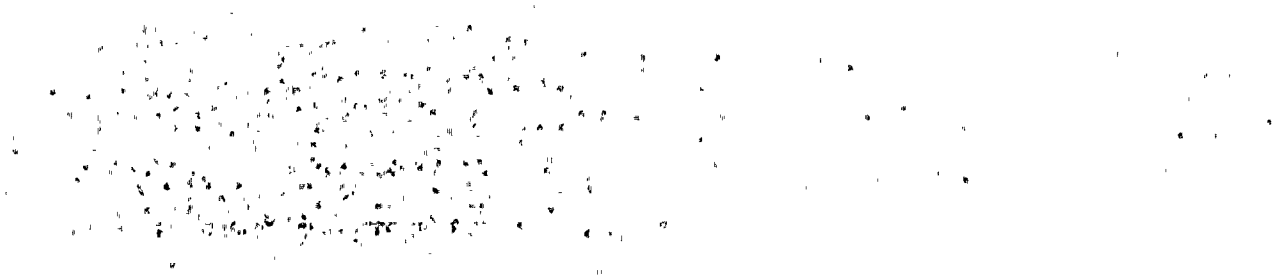

STONE & WEBSTER ENGINEERING CORPORATION

CALCULATION SHEET

A 5010.65

CALCULATION IDENTIFICATION NUMBER				PAGE 44
J.O. OR W.O. NO.	DIVISION & GROUP	CALCULATION NO.	OPTIONAL TASK CODE	
12177.92	EMD	MS-2126		

-Attachment- 2

12177.92
MS-2126
P. 65

ATTACHMENT B

EQUIPMENT QUALIFICATION ACTION ITEM FORM (EQAI) No. 500

1. Document Y28628 (i.e., ACN, N&D, E&DCR, spec. revision/ addendum, environmental parameters, dynamic loads, PADP)

2. Specification No. P303D

3. Brief Description of Change
REMOVE MSIV'S LATCHING MECHANISM AND ADD A NEW HYDRAULIC SYSTEM TO ACTUATOR SO THAT VALVE'S CLOSING TIME MEETS SPECIFICATION REQUIREMENTS

4. Affected Qualification Documents - Examples: Vndr. Qual. Rpts., Calcs, Master List, Maint. Data Shts., etc.
If Master List is changed attach applicable Master List Change Form.

VENDOR QUALIFICATION REPORTS.

5. Description of Impact

DELETING THE MSIV LATCHING MECHANISM AND ADDING THE NEW HYDRAULIC SYSTEM CHANGES THE QUALIFICATION OF THE MSIV'S.

6. Specific Action Required - Detailed List of Action Items
NEW HYDRAULIC SYSTEM REQUIRES QUALIFICATION. BACK UP CALCULATIONS ARE REQUIRED TO ADDRESS IMPACT ON EXISTING QUALIFICATION. (N. RAPAGNANI / D. BHARGAVA).

~~LEQE~~/LSQE A. BLUM/RNC Date 10-13-86

7. Disposition _____
ERL Entry Completed?
Are action items completed and equipment qualified?

Responsible LDE _____ Date _____
Responsible LEQE/LSQE _____ Date _____

☐ LEQE
☒ Responsible Lead Engineer
N. RAPAGNANI
D. BHARGAVA
E. MOWER

☒ LSQE
☐ ATPE-EQ
☐ Job Book EQS-004
M. FACHADA (SCG)
A. ISSA (SCG)

STONE AND WEBSTER ENGINEERING CORPORATION
ENGINEERING & DESIGN COORDINATION REPORT

PAGE 1 OF 14

E & DCR NO. 428628

PROJECT/CLIENT: NINE MILE POINT NUCLEAR STATION — UNIT 2 NIAGARA MOHAWK POWER CORPORATION

JOB ORDER NO. 12177

P.O. NO. (S.E.M.): P303D

REASON CODE IS: F

EQUIP. NO. (S.) SYS. CODE IS: 2MSS*HYV6A,B,C,D&7A,B,C,D/2MSS/001.000

REFERENCE DOCUMENTS: S&W File # 5.360-180-395A 171C 191F

SUPPLIER (OR SUBSUPPLIER) NAME: Energy Products Group

DESCRIPTION SUMMARY: Modification to MSIV Actuators

REMARKS: None

12177.92

MS-2126
P.66

PROBLEM DESCRIPTION

The MSIV latching mechanism performance is inconsistent. The valve's closing time cannot meet specification requirements.
The MSIV actuator needs to be modified to allow the valve to remain open thru hydraulics.

INITIATOR: Robert F Bates | AREA DEPT. | TEL. EXT. 4581 | DATE 10/10/86 | DATE INCORPORATED 10/10/86 | APPROVED [signature] | ENGR. REQ. X

PROBLEM SOLUTION

Modify MSIV's 2MSS*HYV 6A,B,C,&D & 7A,B,C,&D.
Remove all mechanical latching components per note 8 on pg 2 of ~~12~~ 14 of this E&DCR. Add new hydraulic system and revise S&W File no. 5.360-180-395 as per pgs 5 thru ~~12~~ 14 of this E&DCR.
Revise S&W File nos. 5.360-180-171 & 191 as per pg 5 of 14 of this E&DCR.

ENGR. QUAL. YES X NO ☐ | INTERDISCIPLINE CONCURRENCE ENGR | DATE | ASME ☐ NO ASME

SEISMIC QUAL. YES X NO ☐ | DISCIPLINE | DEF. REQD. YES ☐ NO

AFFECTED DOCUMENT NUMBERS	TYPE	STATUS
5.360-180-395	M	C
5.360-180-171	M	C
5.360-180-191	M	C
CONT'D ON		
PAGE 14 OF 14		

RELATED ACTIVITIES: B | QA CAT: I, II | CLIENT APP. REQ'D X | REF. | DATE

ANSWERED BY: Robert F Bates | DATE 10/10/86 | SUB ITEM 01 | WORK RESP. ACD | SUB ITEM 02

RESP. LEAD ENGR: MAFACLADA/JGP | DATE 10/10/86 | EQ RELEASE NO. 001.000 | EQ RELEASE NO.

MATERIALS ENGR. | DATE | WBS NO. | WBS NO.

EQUIP. SPEC.: NR MAF/JGP | DATE | WORK COMPLETION NWR ☐

DSC CP EA | DATE | INSP. REPORT NO./S.C.

PROJ. ENGR. | DATE | FINAL WORK TRACKING CLOSURE

STATUS: C - WILL BE INCORPORATED; N - WILL NOT BE INCORPORATED; O - NO CHANGE

DESCRIPTION: Modification to MSIV Actuators | REMARKS

DESCRIPTION | REMARKS

12177.92
MS-2126
P.67

PROBLEM SOLUTION CON'T.

4. ADD NEW HYDRAULIC COMPONENTS PER PGS. 4 THRU 11 & PG 13. HYDRAULIC RETURN HEADER REQUIRES REWORK PER PG. 12 TO ALLOW CLEARANCE FOR CYLINDER REMOVAL.

5. TUBING & FITTINGS TO BE INSTALLED PER C081A (CAT II) & FIELD ROUTED PER SKETCHES ON PGS. 4 THRU 13

6. ALL O-RINGS (SEALS) ON EQUIPT. & TUBE FITTINGS TO BE EPDM (EPR) OR VITON UNLESS OTHERWISE SPEC'D.

7. MATERIAL: PLATE - STEEL ASTM A36.
STRUC. SHAPES - STEEL ASTM A36.
" U " BOLTS - STEEL SA 36.
BOLTS - STEEL ASTM A307.
NUTS - STEEL ASTM A307.

8. REMOVE PIVOT DOOR, BLOCKING LEVER, BLOCKING LEVER SUPPORT BRACKET, TRIP SOLENOIDS & ALL ASSOCIATED HARDWARE. COMPONENTS TO BE TAGGED, BOXED & STORED.

9. ALL HYDRAULIC COMPONENTS ARE CAT II, EXCEPT SOV. A & B WHICH ARE CAT I.

10. MECHANICAL COMPONENTS (PUMP, ACCUMULATOR, CYLINDER, ETC. TO BE INSTALLED PER REQTS. OF P1751.

CALCULATION SHEET

CALCULATION IDENTIFICATION NUMBER				
J.O. OR W.O. NO.	DIVISION & GROUP	CALCULATION NO	OPTIONAL TASK CODE	PAGE 68
12177.92	EMD/MECH	MS-2126		

HYDRAULIC CIRCUIT

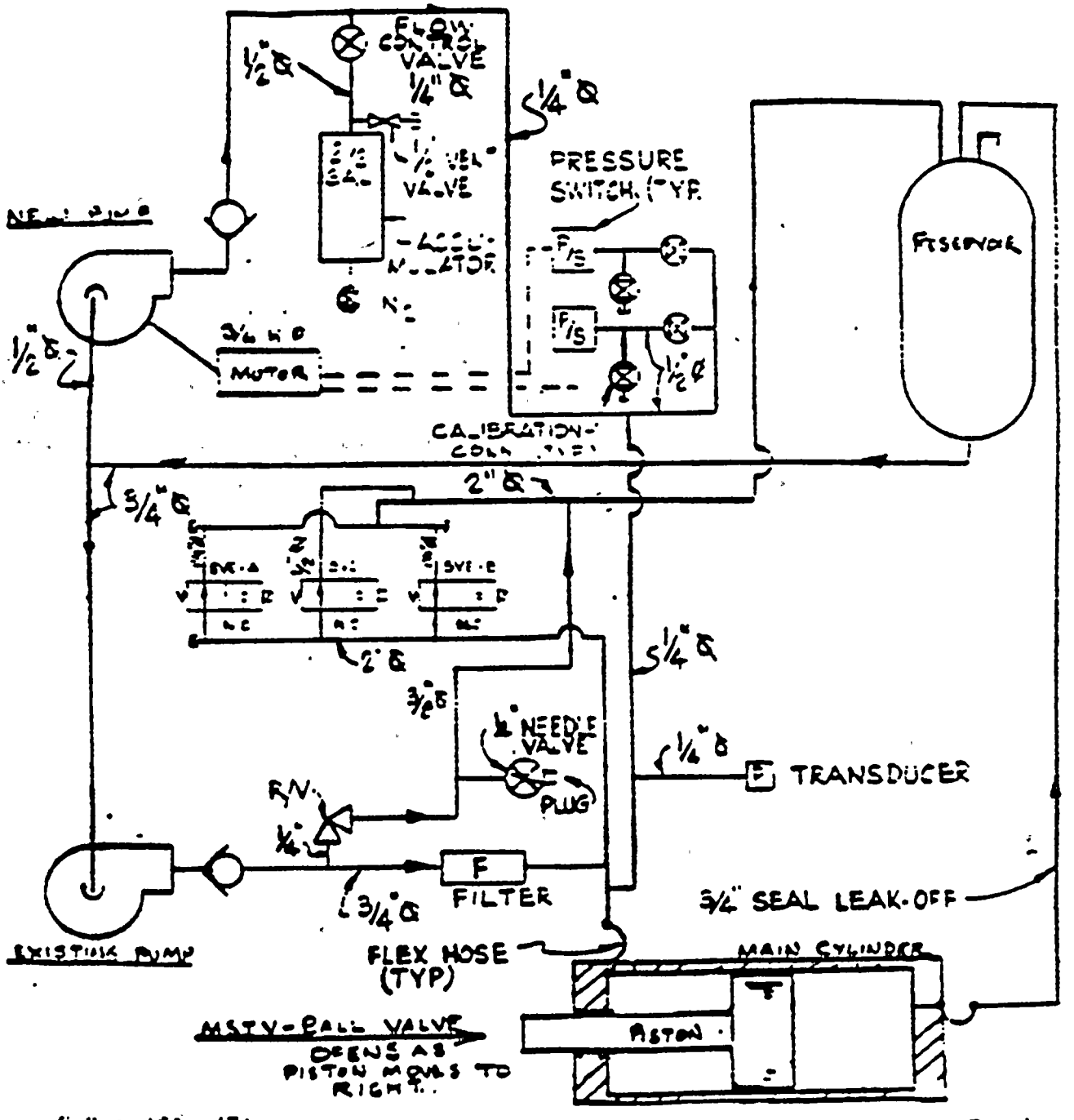

5.360-180-171
5.360-180-191
5.360-140-398

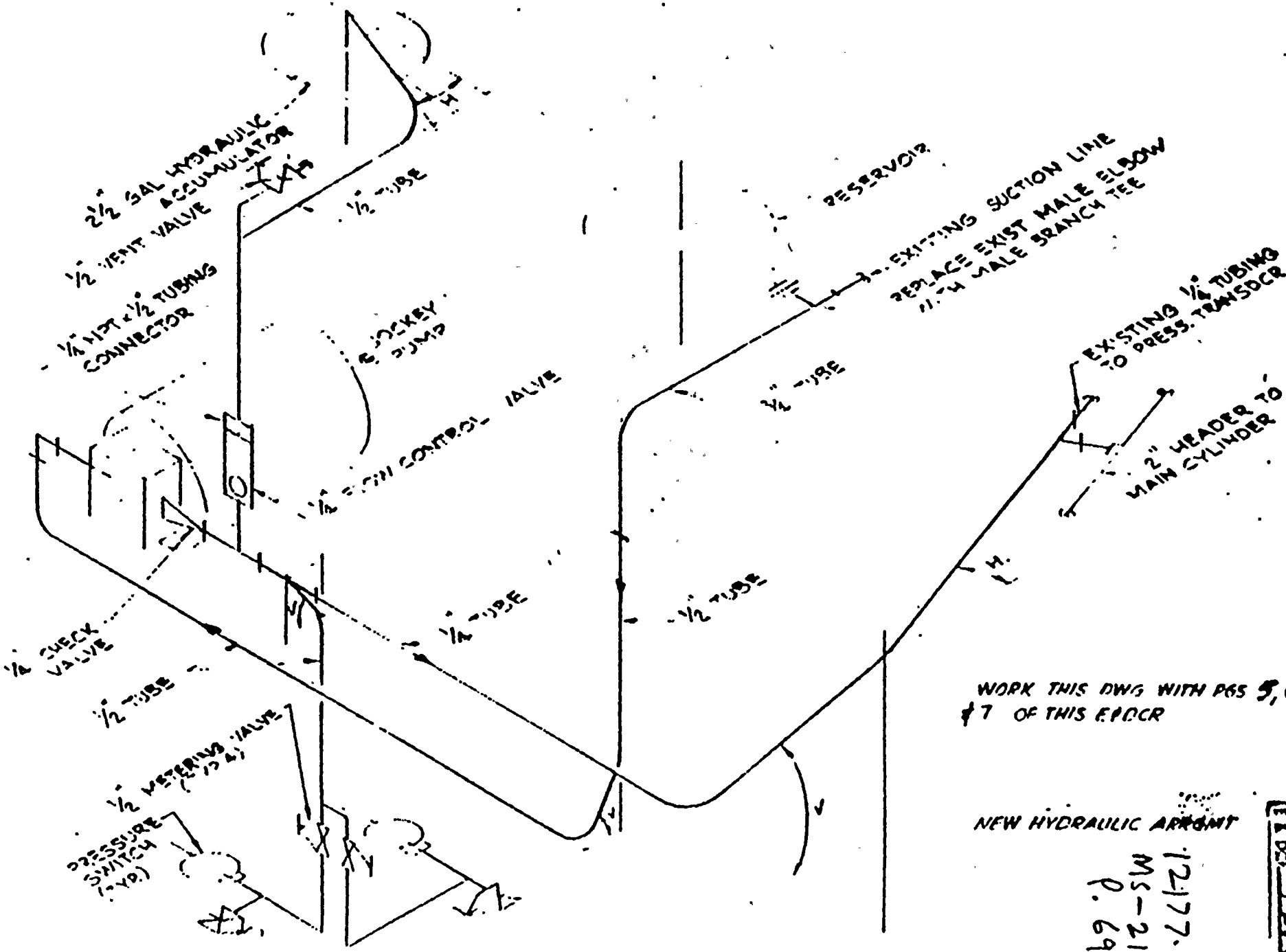

WORK THIS DWG WITH PGS 5, 6, & 7 OF THIS E&DCR

NEW HYDRAULIC ARRGMT

12177.92
MS-2126
P. 69

PAGE
E & DCR Y2862

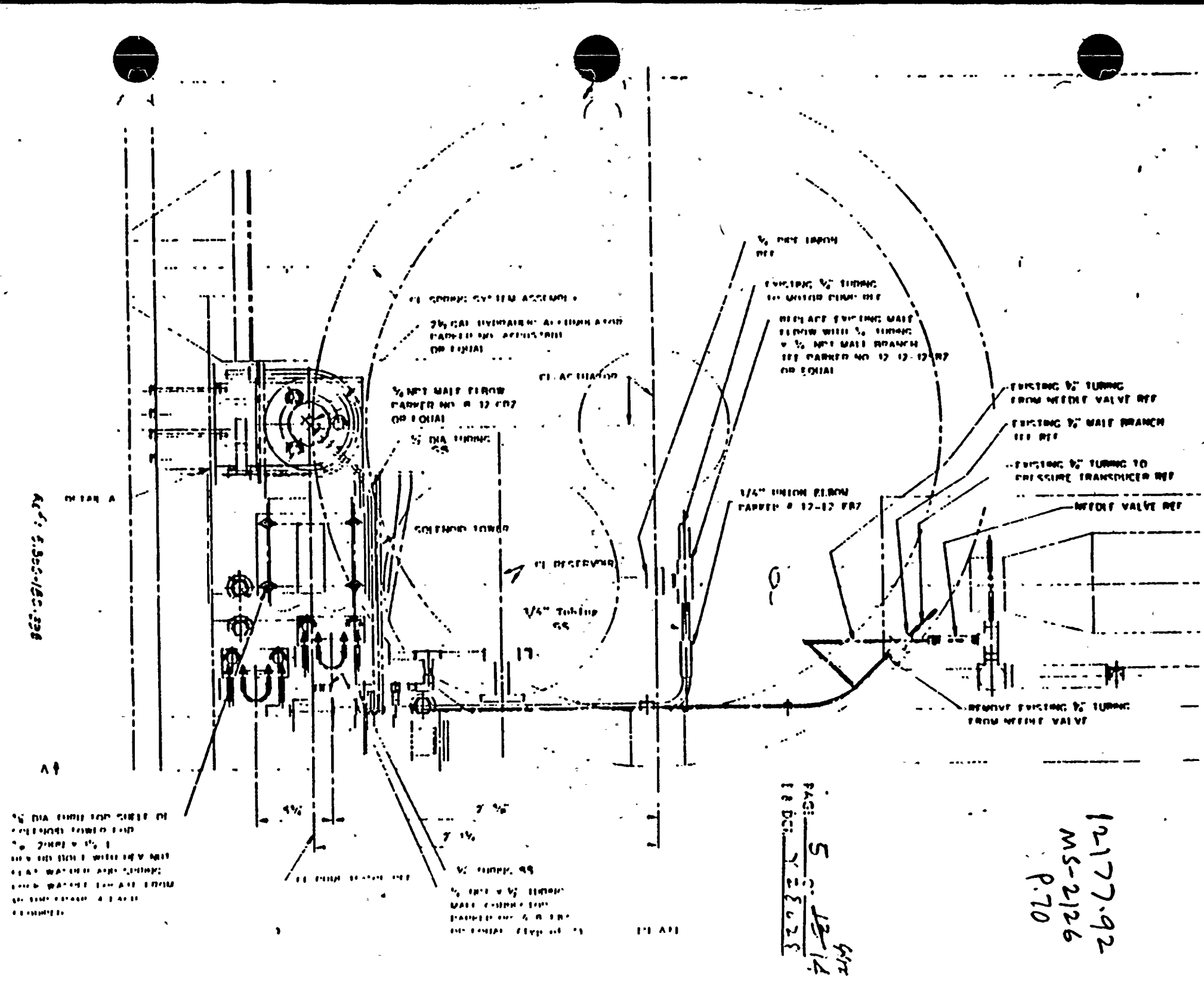

PAGE 5 OF 13
DATE 12-14

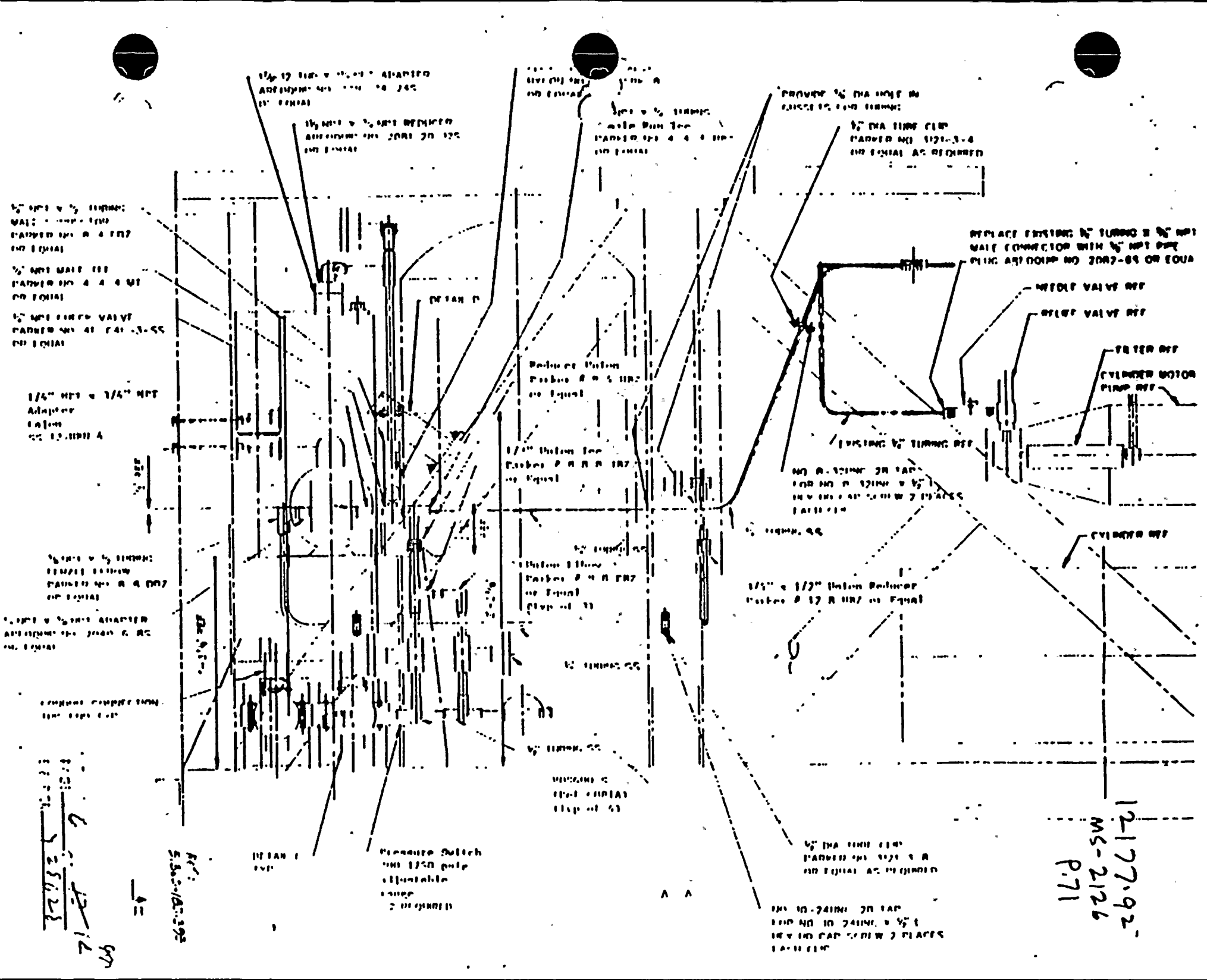

12177.92
MS-2126
P.71

1-0

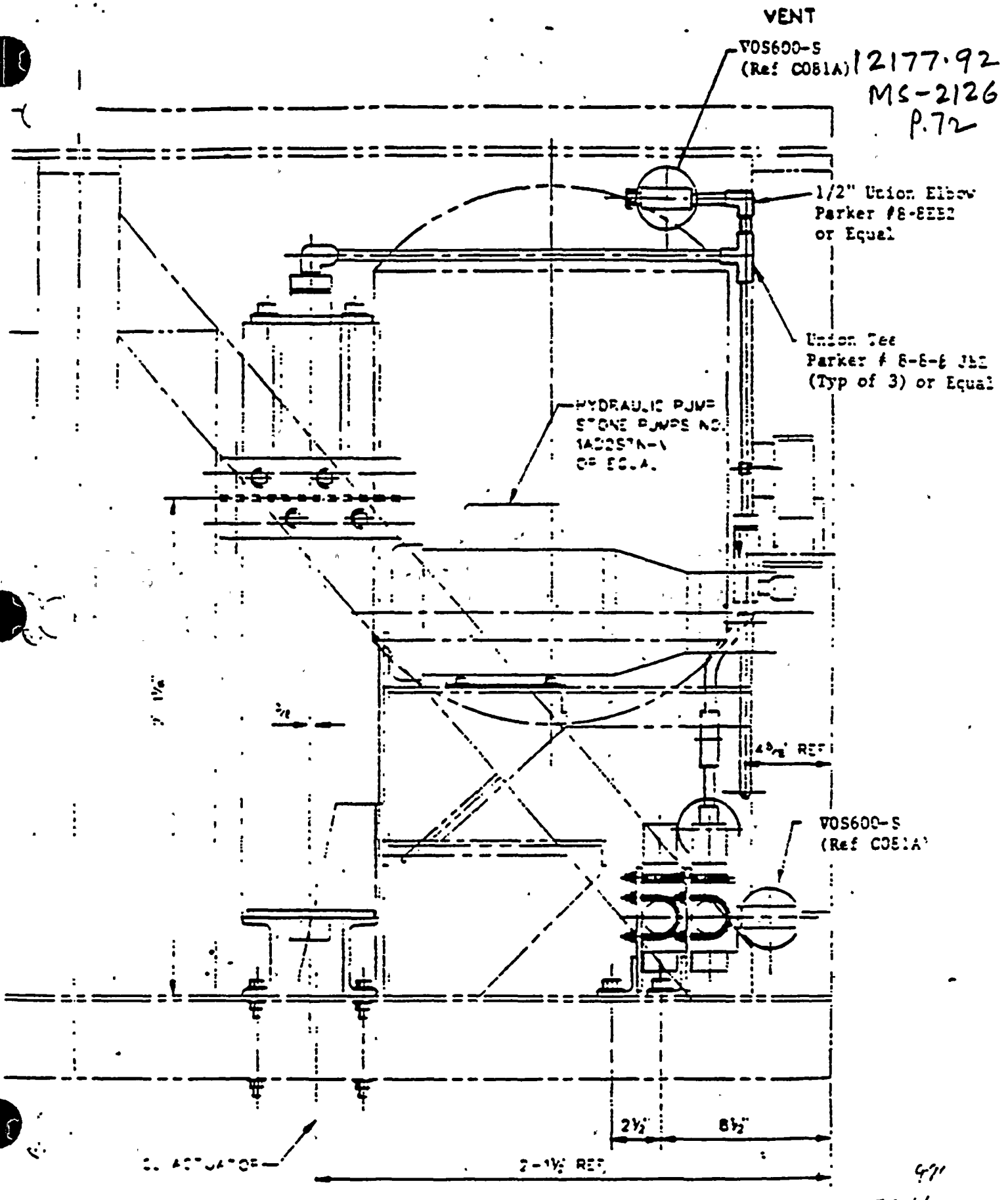

B-B

5.3cc-180-39l

PAGE 7 OF ~~13~~ 14
E & DCR Y28628

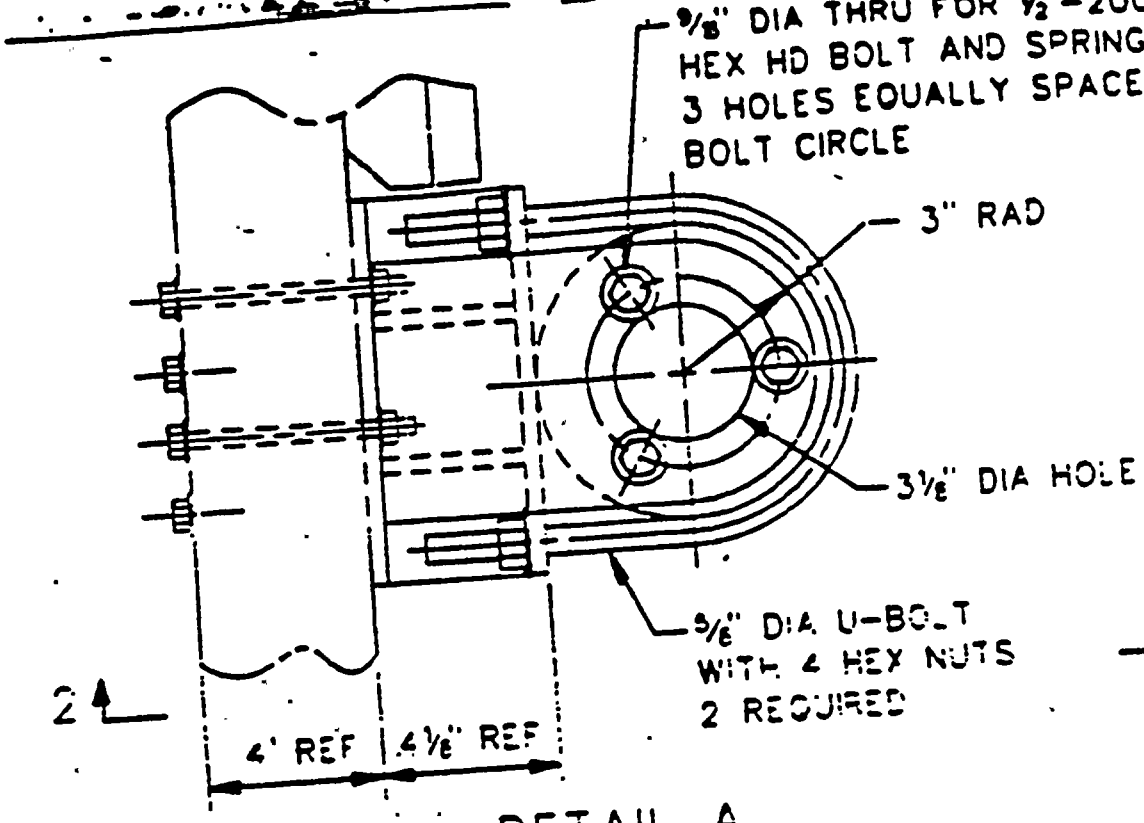

12177-92
MS-2126
P.73

DETAIL A

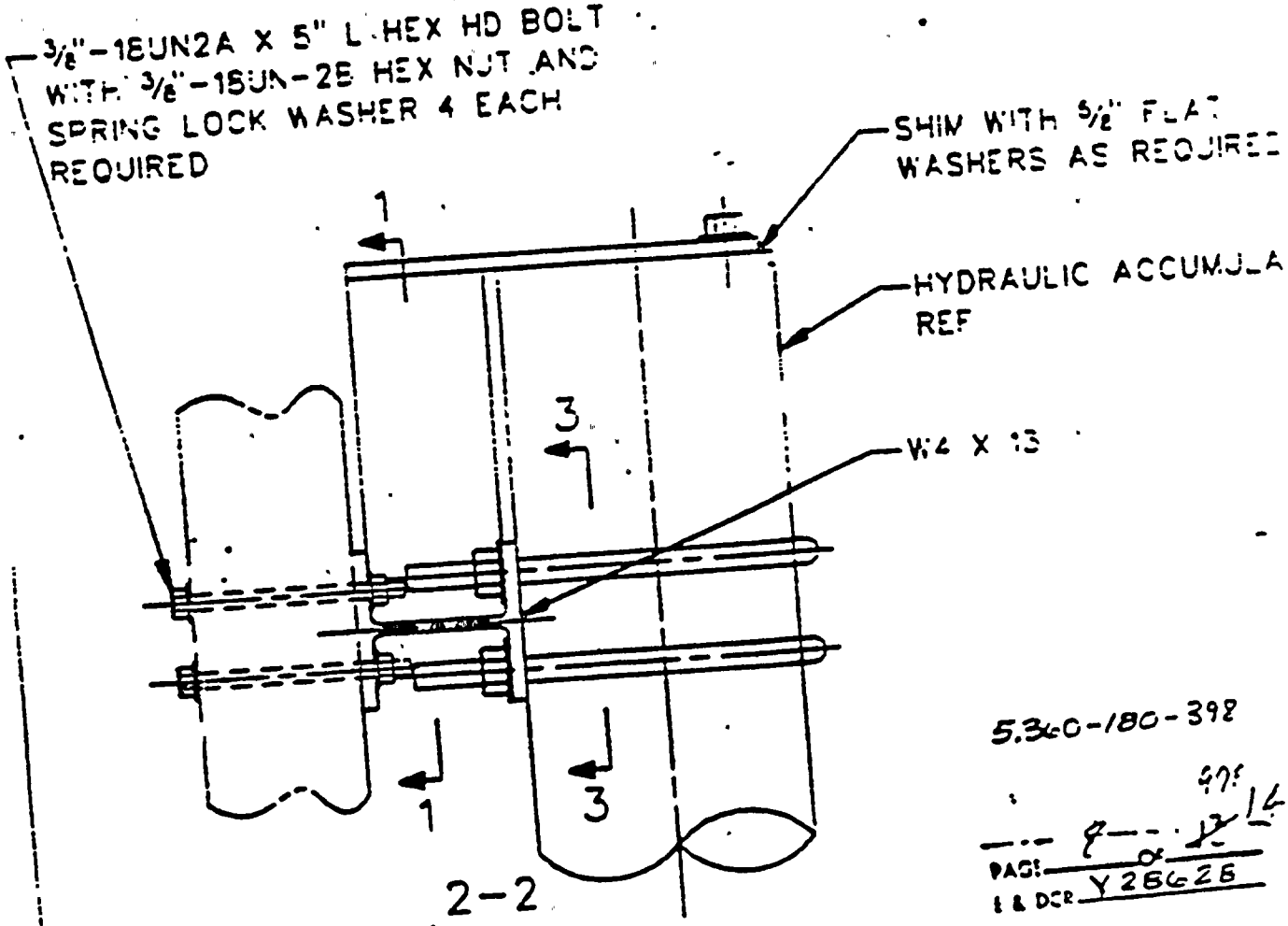

2-2

5360-180-398

PAGE 8 OF 14
E & DCR Y26626

12177-92
MS-2126
P.74

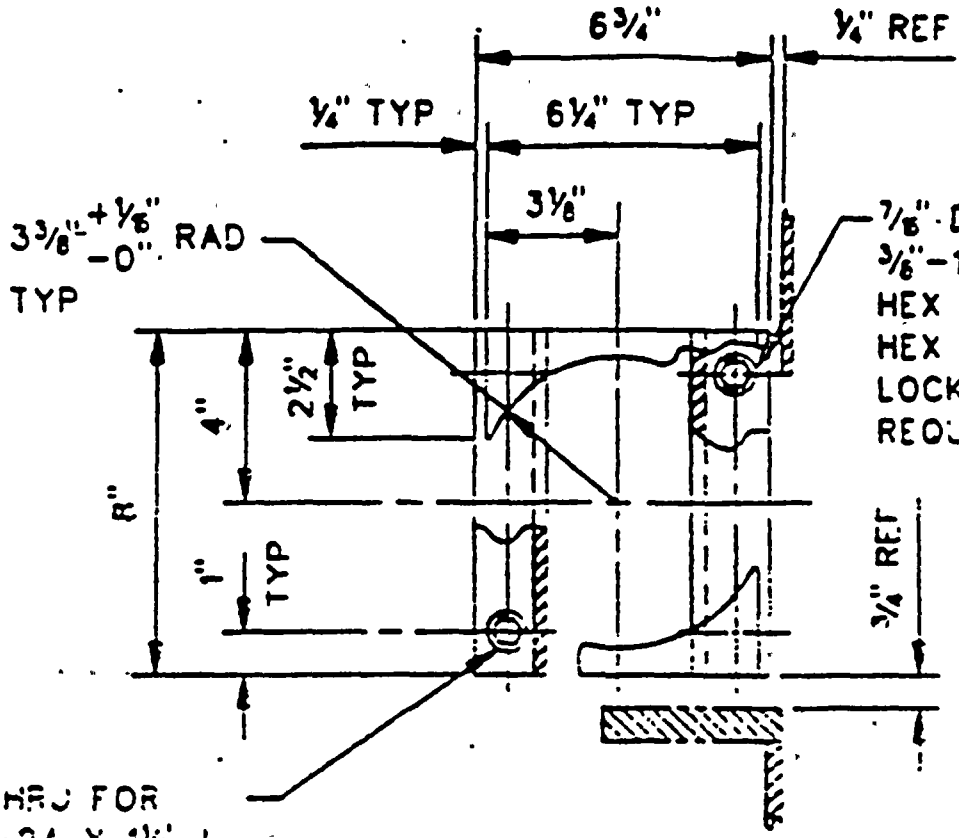

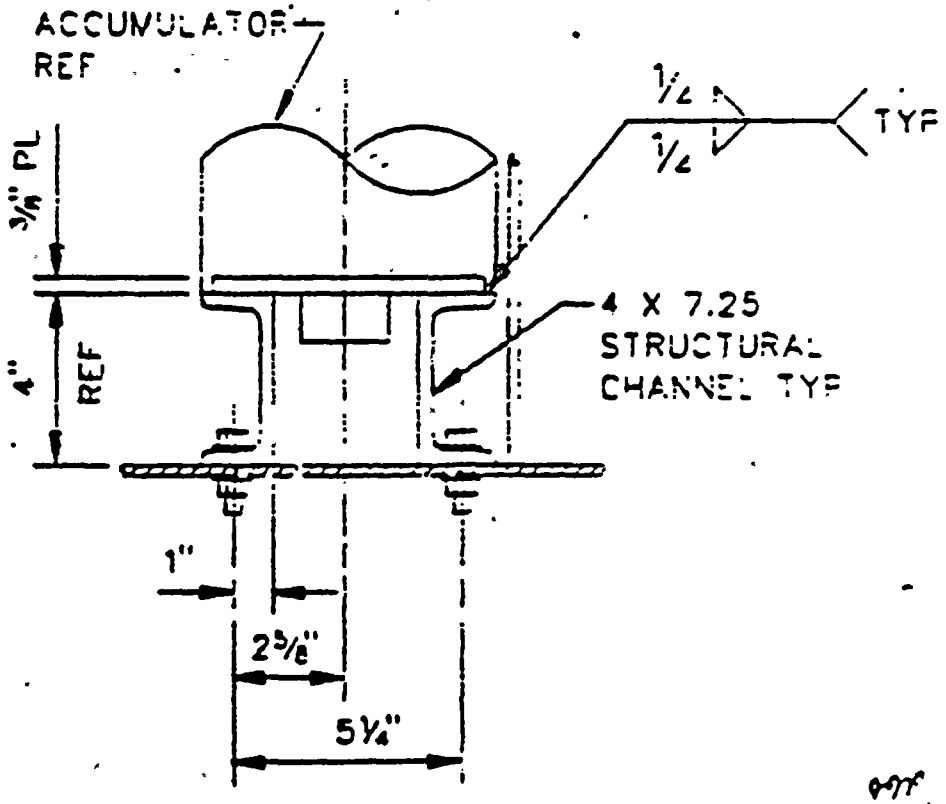

DETAIL B

PAGE 9 OF 14
E & DCR Y2862E

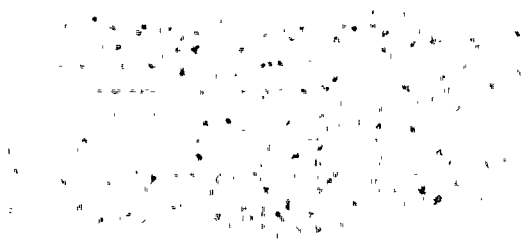

12177-92
MS-2126
P.75

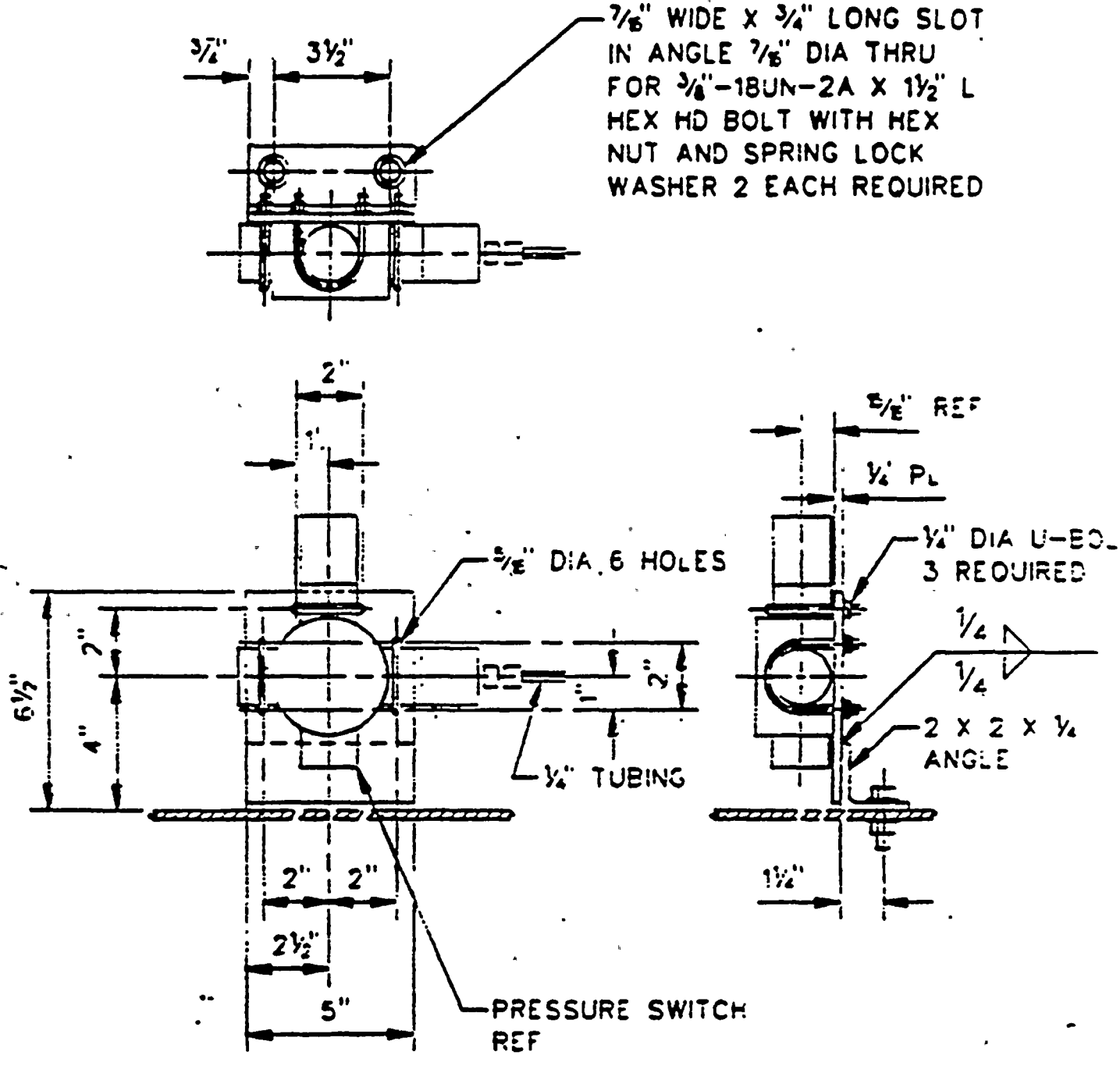

DETAIL C

2 REQUIRED

PAGE 10 OF 14

E & DCL Y28G2E

S.360-182-39E

12/7/92
MS-2126
P.76

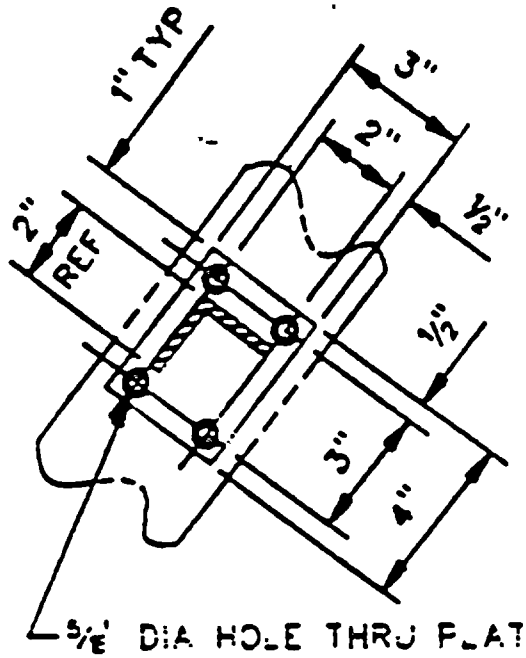

⅝" DIA HOLE THRU PLATE
½"-20UNC TAP THRU STRL TUBING AT ASSEMBLY FOR ½"-20UNC X 1" L HEX HD. CAP SCREW WITH SPRING LOCK WASHER 4 EACH REQUIRED

4-4

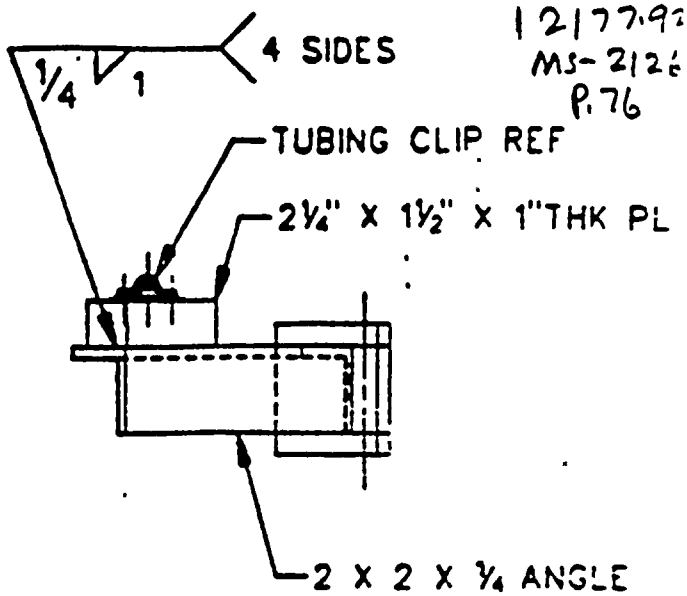

5-5

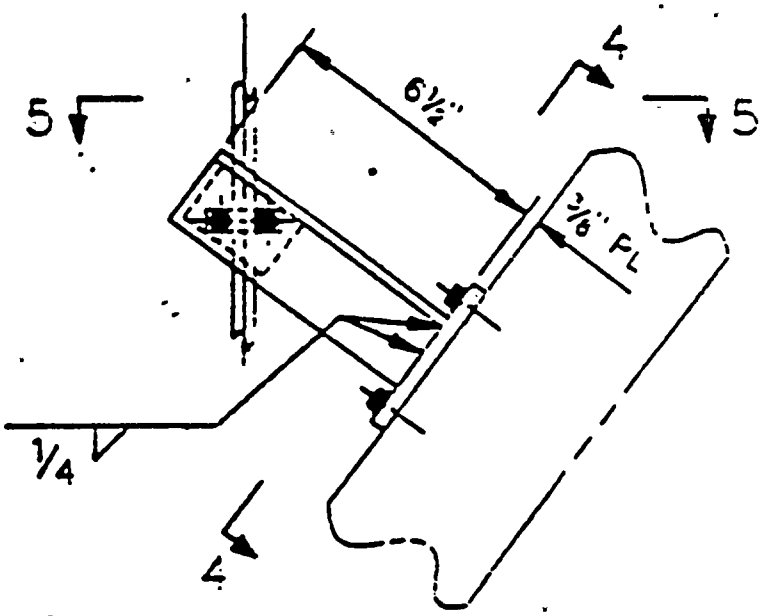

DETAIL D

5.360-160-99E

PAGE 11 OF 14
I S DOC Y2862E

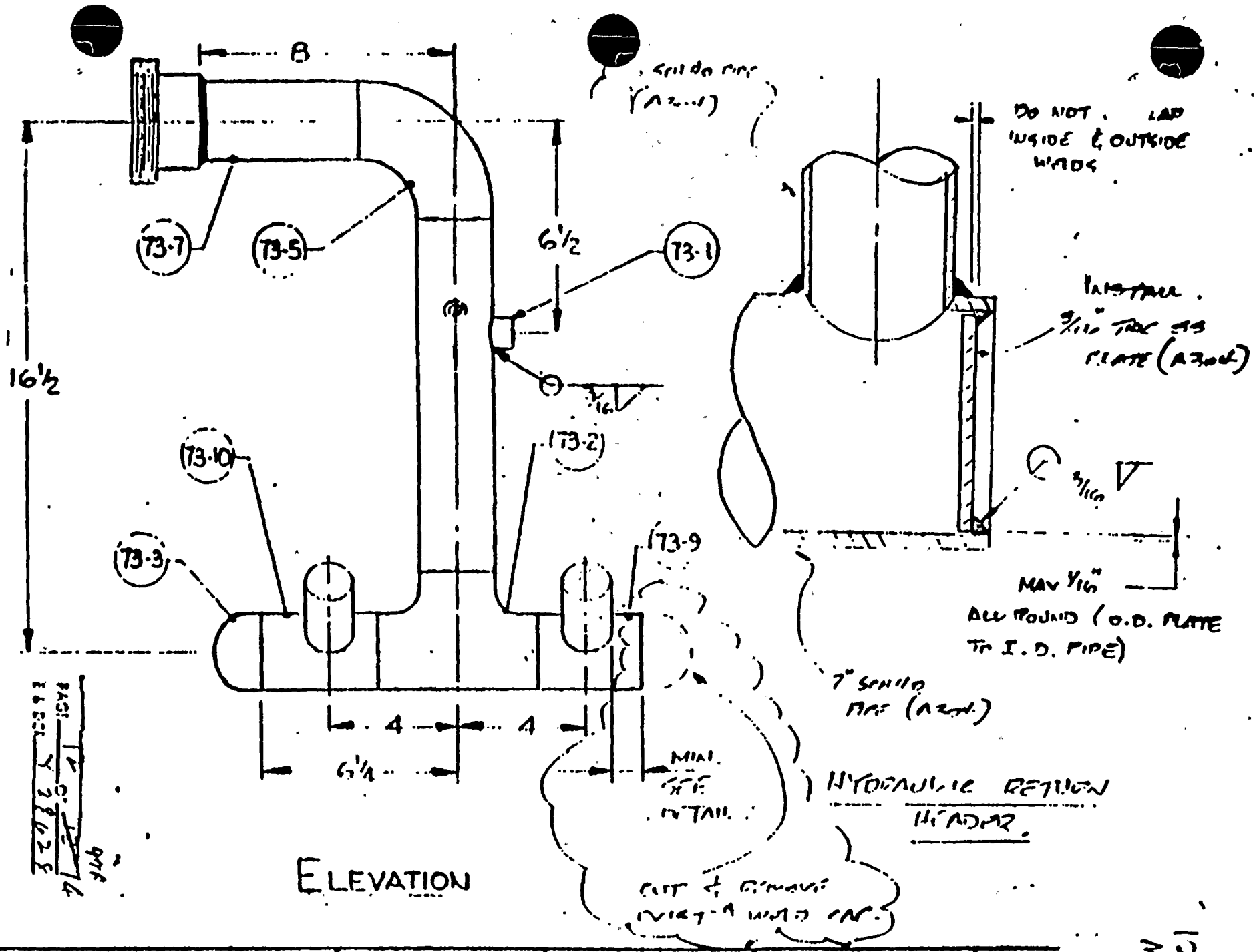

TOLERANCES	FEATURE CONTROL SYMBOLS PER ANSI Y14.5	FINISHES
ANGLES ± 1°		UNLESS OTHERWISE SPECIFIED
FRACTIONS ± 1/64		
.XX ± .010		RADII
.XXX ± .005		

B/M

12177-92
MS-2126
P77

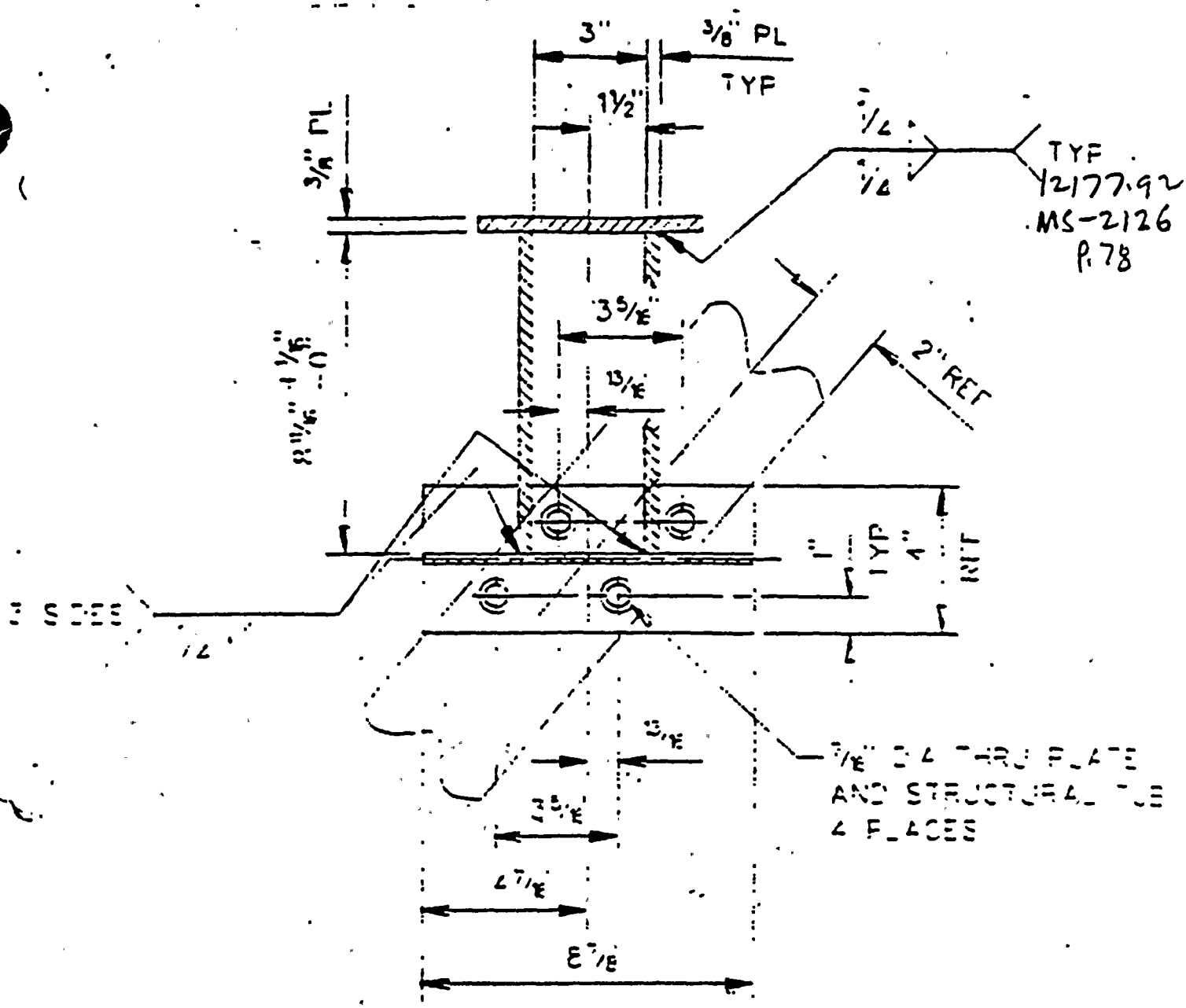
3"
3/8" PL
TYP
1 1/2"
3/8" PL
1/4
1/4
TYP
Y2177.92
MS-2126
P.78
3 5/16"
13/16"
2" REF
TYP
REF
3 SIDES
1/4
13/16"
7/16" DIA THRU PLATE
AND STRUCTURAL TUB
4 PLACES
3 5/16"
4 7/16"
8 7/8"

1—1

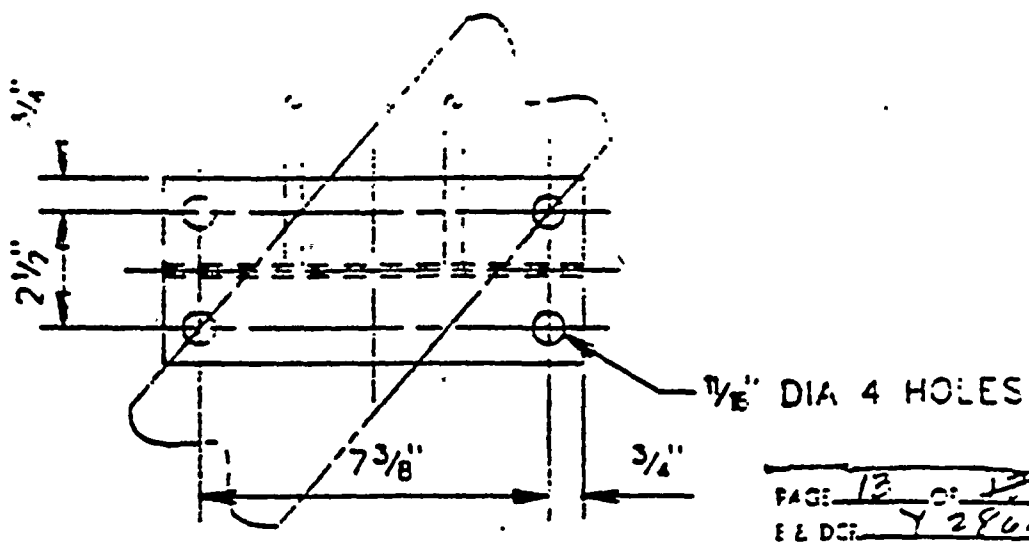
3/4"
2 1/2"
11/16" DIA 4 HOLES
7 3/8"
3/4"

3—3

Affected Document Nº	Type	Status
P303D	S	N
C081A	S	N
P301P	S	N
P275D	S	N

12177.92
MS-2126
P. 19

12/17/92
MS-2126
P.80

Attachment A
Page 1 of 2

REVIEWER CHECKLIST TO DETERMINE EFFECT OF CHANGES ON CATEGORY I
ELECTRICAL AND MECHANICAL EQUIPMENT QUALIFICATION

Change Document: Y2F628
(i.e., [illegible], Spec Revision/Addenda, PACF revision, etc)
Specification/Drawing No. P303D

Section I - Category of Changes: If the subject(s) of all changes in the change document are totally restricted to one or more of the following categories below, check the block and proceed to Section III of this form. If the block is not checked proceed to Section II of this form.

1 Recovery installation ☐

2. Cable termination, wiring changes exclusive of methods/materials of termination; cable pull

3 Replacement with identical equipment/component at the same location and installed to the original requirements

4 Documentation not related to equipment qualification

5. Restoration of equipment to its original condition/configuration/identical equipment

6 Revision/rerouting/addition/deletion of pipe/tubing/cable conduit/duct which does not include QA Category I equipment terminations or at the terminations

7 Revisions/additions/deletions/reconfiguration of supports which are only supporting pipe/tube/duct/conduit

8 Change document has a GE-NSSS FDDI attached

9 Replacement of damaged equipment nameplates or revisions/replacement of internal wiring identification markings

Section II: Evaluate any changes not covered by Section I by use of the questions below

1 Does this change affect the location of equipment covered by a specification listed in Attachment E of PP 94? yes/no

2. Does this change add or delete QA Category I equipment, or add or delete equipment covered by the specifications listed in Attachment E of PP 94? yes/no

3 Does this change revise change/replace, in total or part, equipment procured by specifications listed in Attachment E of PP 94? yes/no

4 Does this change affect the method/material of electrical termination? yes/no

5. Does this change specify a new or revised cable route? yes/no

6. Does this change affect electrical device moisture intrusion seals, e.g., Conax, Rosemont, C. Bisco, etc, of equipment procured by the specification in Attachment E? yes/no

7. Does this change affect the mounting configuration of equipment procured by the specifications in Attachment E of PP 94? yes/no

8. Does this change locate, relocate, modify, replace, delete, or affect the mounting of equipment supplied by GE-NSSS? yes/no

12177.92
MS-2126
P81

9. Does this change revise/affect specified design parameters related to equipment qualification (e.g., Environmental, Fluid, Seismic/Hydrodynamic Loads)? Yes/no

Proceed to Section III of this form

Section III

1. Review Not Required: If the block in Section I is checked or if all questions in Section II are answered "No", an Equipment Qualification review is not required.

   Sign off the change document, and for E&DCRs and ACNs, check the "No" blocks for Seismic and Environmental Qualification; for N&Ds, enter "No impact on Environmental, Seismic, Mechanical Qualification" in the Remarks Block.

   Sign and date (Section IV) and secure this checklist to the subject change document or to the specification review form for specification revision/addendum, as applicable.

2. Evaluation of Impact: If any one of the questions in Section II is answered "Yes," the LSQE and LEQE shall review the change document for evaluation of impact.

   No Impact: The LSQE/LEQE provides a justification statement with his signature (see Section IV), and proceeds with Section III.1.

   Impact: If the LSQE and/or LEQE conclude the change document impacts the qualification of equipment, the LSQE and/or LEQE, as applicable, shall check the "Yes" block for Seismic and/or Environmental Qualification on E&DCRs and ACNs; for N&Ds, enter "Impacts Equipment Qualification" in Block No. 4", approve the change document by initialing the document, initiate an Equipment Qualification Action Item (EQAI) form, record the EQAI form number on this attachment, and complete Section IV of this attachment. Consecutively number the EQAI form and forward with a copy of the change document to the ATPB-EQ.

Section IV - Signatures

- Preparer [signature] Date 10-13-86
- No Impact: For use when Section II has a "Yes" but review by LSQE and LEQE determines no impact.

  LSQE/LEQE _____/_____ Date _____/_____
  Justification for no impact: _____

- Impact: For change documents which impact equipment qualification

  LSQE/LEQE [signature] / [signature] Date 10-13-86 / 10/13/86
  EQAI Number/Date 50K / 10-13-86
  501 / 10-13-86

SECURE THIS DOCUMENT TO THE SUBJECT CHANGE DOCUMENT OR SPECIFICATION REVIEW FORM AND PROCEED WITH SIGNOFF.

* In order to support ongoing field work the Project Engineer can approve the EQ checklist for ESQE/LEQE. In this case the EQAI shall be initiated and forward immediately to the LSQE/LEQE for completion of the EQ impact evaluation. (For MMP2-PPS-99-158)

Attachment - 3

12177.92
MS-2126
P82

Page 1 of 1

J.O. No. 12177
NMPC
NMP2

TEL-CON-NOTE

Copy to: Document Control/Chrono
Job Book

A. BLUM
B. NIYOGI

TIME	DATE
10.15 A.M.	10/1/86

	Name	Company
From:	D. BHARGAVA	SWEC
To:	HERSCHEL JORDAN	WYLE LABS, HUNTSVILLE ALA.

TOPIC: MSIV ACTUATOR TESTS OF SEPT, 1983 AT WYLE - TRS PLOTS

DISCUSSION: ACTION REQUIRED

In continuation with our discussion of 9/26/86 (See Telcon Note). Mr Jordan stated that Wyle Labs synthesized a waveform on 9/30/86, which is similar to the one producing the TRS on Page 594 of Wyle Report 46912-2. The difference was that the frequency content of between 100 to 200 Hz of the spectrum of Page 594 was similar to the frequency content in the range 50 to 100 Hz in the newly synthesized waveform. This is because energy into the table could be put only up to about 100 Hz. The following results for various damping values were obtained:

2% DAMPING		3% DAMPING		5% DAMPING	
Freq (Hz)	Accel. (g)	Freq (Hz)	Accel (g)	Freq (Hz)	Accel (g)
50	21.5	50	19	50	16.5
63	23	63	21	63	17.5
80	20.5	80	19	80	16
100	19	100	16	100	14
		125	11.5		
		160	11.0		
		200	11.3		

As can be seen, the ZPA does not reach at 100 Hz. The 3% Damping TRS is plotted to 200 Hz, indicating that the ZPA is between 11 & 11.5 g's.

12177.92
MS-2176
p-83

Page 1 of 1

J.O. No. 12177
NMPC
NMP2

TEL-CON-NOTE

Copy to: Document Control/Chrono
Job Book
A. Blum
B. Niyogi

TIME	DATE
4.30 P.M.	9/26/86

Name	Company
From: D. BHARGAVA	SWEC, CHOC.
To: HERSCHEL JORDAN	WYLE LABS, HUNTSVILLE, ALA.

TOPIC: MSIV ACTUATOR TEST OF SEPT, 1983 AT WYLE – TRS PLOTS.

DISCUSSION: ACTION REQUIRED

The discussion was with reference to the TRS plot at a component location (TRC Solenoid valve) in the Wyle test (Page 594 of Wyle Report 46912-2). This spectrum, plotted upto 200 Hz has a value of 15g at 200 Hz, and the $\frac{1}{3}$ octave points below 200 Hz are higher. I asked Wyle if the true ZPA might be somewhat lower than 15g's, based on Wyle's past experience. Mr Jordan stated that although it is difficult to quantify the true ZPA, his judgement is that it would be about 10 to 12 g's. He also said that he would try to obtain some data on their machine on 9/29/86, and will call back on 9/30/86.

L 2.1 (JAN 75) OS/360 FORTRAN H EX D DATE 86.276/16.20.34 PAGE 1

```
REQUESTED OPTIONS: OBJ,SIZE(640K)

OPTIONS IN EFFECT: NAME(MAIN) OPTIMIZE(2) LINECOUNT(60) SIZE(0640K) AUTODBL(NONE)
                   SOURCE EBCDIC NOLIST NODECK OBJECT MAP NOFORMAT GOSTMT NOXREF NOALC NOANSF TERMINAL FLAG(I)

                C
                C   ***************************************************************
                C   ***** BIGGS METHOD FOR CALCULATING SPECTRAL ORDINATES *******
                C   ***************************************************************
                C
   ISN 0002             DIMENSION FREQS(100),GH(3,100),PH(3,100),AEHG(3),ASNE(3),AEH(3)
   ISN 0003             DIMENSION X1(3,100),X2(3,100),AEHNP(3,100)
   ISN 0004             DIMENSION SUH1(3),SUH2(3),SUH3(3)
                C
                C   NMODE=NO.OF MODES TO CONSIDER
                C
   ISN 0005             NMODE=30
                C
                C   READ STRUCTURE MODAL DATA
                C
   ISN 0006             DO 10 N=1,NMODE
   ISN 0007             READ(5,1001) FREQS(N),(GH(I,N),I=1,3)
   ISN 0008     1001    FORMAT(3X,4X,E11.5,15X,3(4X,E11.5))
   ISN 0009     10      WRITE(6,1001) FREQS(N),(GH(I,N),I=1,3)
                C
                C
   ISN 0010             DO 19 N=1,NMODE
   ISN 0011             READ(5,1090)(PH(J,N),J=1,3)
   ISN 0012     1090    FORMAT(3F10.4)
   ISN 0013     19      WRITE(6,1001) (PH(J,N),J=1,3)
                C
                C   GENERATE SPECTRAL ORDINATES STARTING AT FREQUENCY = OH
                C
   ISN 0014             OH=1900.
                C
                C   FIND BASE MOTION ACCELERATION AT FREQUENCY = OH, AT EQUIP. DAMPING
                C
   ISN 0015     5000    DO 15 NDIR=1,3
   ISN 0016     15      AEHG(NDIR)=BASEQG(OH,NDIR)
                C
                C   INITIALIZE DATA
                C
   ISN 0017             DO 20 I=1,3
   ISN 0018             DO 20 J=1,NMODE
   ISN 0019             X1(I,J)=0.0
   ISN 0020             X2(I,J)=0.0
   ISN 0021             AEHNP(I,J)=0.0
   ISN 0022             SUH1(I)=0.0
   ISN 0023             SUH2(I)=0.0
   ISN 0024     20      SUH3(I)=0.0
                C
                C   CHECK RATIO OF MODAL FREQUENCY FOR MODE-N TO OSCILLATOR FREQUENCY
                C
   ISN 0025             DO 50 N=1,NMODE
   ISN 0026             RATIO=FREQS(N)/OH
   ISN 0027             IF(RATIO.GT.1.25) GO TO 5001
                C
                C   FOR RATIO LESS THAN 1.25
```

Attachment-4

12/27.92
MS-2126
P.84

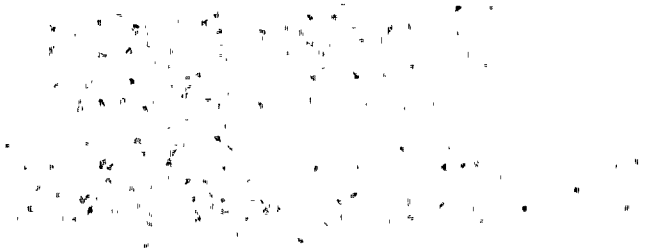

```
C
ISN 0029          FACTOR=FIG1(RATIO)
ISN 0030          DO 30 MDIR=1,3
ISN 0031          F=FREQS(N)
ISN 0032          ASNE(MDIR)= BASEQG(F,MDIR)*GH(MDIR,N)*PH(MDIR,N)
ISN 0033          X2(MDIR,N)=GH(MDIR,N)*PH(MDIR,N)
ISN 0034    30    AEHNP(MDIR,N)=FACTOR*ASNE(MDIR)
ISN 0035          GOTO 50
C
C   FOR RATIO GREATER THAN 1.25
C
ISN 0036    5001  FACTOR=FIG3(RATIO)
ISN 0037          DO 40 MDIR=1,3
ISN 0038          X1(MDIR,N)=GH(MDIR,N)*PH(MDIR,N)*AEHS(MDIR)*FACTOR
ISN 0039    40    X2(MDIR,N)=GH(MDIR,N)*PH(MDIR,N)
C
C   REPEAT FOR OTHER MODES
C
ISN 0040    50    CONTINUE
C
C   SUM RESPONSES DUE TO ALL MODES
C
ISN 0041          DO 70 MDIR=1,3
ISN 0042          DO 60 J=1,NMODE
ISN 0043          SUM1(MDIR)=SUM1(MDIR)+X1(MDIR,J)**2
ISN 0044          SUM2(MDIR)=SUM2(MDIR)+X2(MDIR,J)**2
ISN 0045    60    SUM3(MDIR)=SUM3(MDIR)+AEHNP(MDIR,J)**2
C
C   CALCULATE ACCELERATION IN THE THREE DIRECTIONS
C
ISN 0046    70    AEH(MDIR)=SQRT(SUM3(MDIR)+SUM1(MDIR)/SUM2(MDIR))
C
C   WRITE THE RESULTS
C
ISN 0047          WRITE(6,2001) OH,(AEH(MDIR),MDIR=1,3)
ISN 0048    2001  FORMAT(7X,F9.2,7X,F9.2,5X,F9.2,5X,F9.2)
C
C   INCREASE OSCILLATOR FREQUENCY AND RESTART CALCULATIONS
C
ISN 0049          OHINC=1.0
ISN 0050          IF(OH.GT.200.)OHINC=10.
ISN 0052          IF(OH.GT.500.)OHINC=100.
ISN 0054          OH=OH+OHINC
ISN 0055          IF(OH.LE.1000) GO TO 5000
C
C
C
ISN 0057          STOP
ISN 0058          END
```

12727.42
MS-2126
P.85

REQUESTED OPTIONS: OBJ,SIZE(640K)

OPTIONS IN EFFECT: NAME(MAIN) OPTIMIZE(2) LINECOUNT(60) SIZE(8640K) AUTODBL(NONE)
SOURCE EBCDIC NOLIST NODECK OBJECT MAP NOFORMAT GOSTMT NOXREF NOALC NOANSF TERMINAL FLAG(I)

```
                C
                C   BASE RESPONSE SPECTRA AT EQUIPMENT  DAMPING
                C
ISN 0002            FUNCTION BASEQG(FR,N)
ISN 0003            DIMENSION F(100),G(100)
ISN 0004            NP=23
ISN 0005            IF(N.GT.1) GO TO 2
ISN 0007            F(1)=0.38
ISN 0008            G(1)=0.28
ISN 0009            F(2)=1.00
ISN 0010            G(2)=0.28
ISN 0011            F(3)=2.55
ISN 0012            G(3)=1.2
ISN 0013            F(4)=3.5
ISN 0014            G(4)=1.2
ISN 0015            F(5)=3.65
ISN 0016            G(5)=1.30
ISN 0017            F(6)=6.9
ISN 0018            G(6)=1.3
ISN 0019            F(7)=7.4
ISN 0020            G(7)=0.63
ISN 0021            F(8)=16.5
ISN 0022            G(8)=0.63
ISN 0023            F(9)=19.0
ISN 0024            G(9)=1.48
ISN 0025            F(10)=26.5
ISN 0026            G(10)=1.48
ISN 0027            F(11)=33.0
ISN 0028            G(11)=3.65
ISN 0029            F(12)=64.0
ISN 0030            G(12)=3.65
ISN 0031            F(13)=72.0
ISN 0032            G(13)=2.6
ISN 0033            F(14)=100.0
ISN 0034            G(14)=2.6
ISN 0035            F(15)=150.0
ISN 0036            G(15)=0.77
ISN 0037            F(16)=160.0
ISN 0038            G(16)=0.77
ISN 0039            F(17)=165.0
ISN 0040            G(17)=0.77
ISN 0041            F(18)=170.0
ISN 0042            G(18)=0.77
ISN 0043            F(19)=175.0
ISN 0044            G(19)=0.77
ISN 0045            F(20)=180.0
ISN 0046            G(20)=0.77
ISN 0047            F(21)=185.0
ISN 0048            G(21)=0.77
ISN 0049            F(22)=190.0
ISN 0050            G(22)=0.77
ISN 0051            F(23)=2000.
ISN 0052            G(23)=0.77
```

12177.42
MS-2126
P86

```
ISN 0053            DO 10 I=1,NP
ISN 0054            IF(FR.EQ.F(I))BASEQ8=8(I)
ISN 0056            IF(FR.EQ.F(I))GO TO 30
ISN 0058            IF(FR.GT.F(I))GO TO 10
ISN 0060            IF(FR.LT.F(I))GO TO 20
ISN 0062      10    CONTINUE
ISN 0063      20    X2=LOG(F(I))
ISN 0064            X1=LOG(F(I-1))
ISN 0065            Y2=8(I)
ISN 0066            Y1=8(I-1)
ISN 0067            EM=(Y2-Y1)/(X2-X1)
ISN 0068            BASEQ8=(LOG(FR)-X1)*EM+Y1
ISN 0069            GO TO 30
ISN 0070      2     IF(N.GT.2) GO TO 3
              C  ****BASE ARS IN 2 DIRECTION*****
ISN 0072            F(1)=0.30
ISN 0073            8(1)=0.36
ISN 0074            F(2)=1.00
ISN 0075            8(2)=0.36
ISN 0076            F(3)=1.34
ISN 0077            8(3)=0.50
ISN 0078            F(4)=2.75
ISN 0079            8(4)=2.73
ISN 0080            F(5)=4.70
ISN 0081            8(5)=2.73
ISN 0082            F(6)=5.25
ISN 0083            8(6)=2.70
ISN 0084            F(7)=7.1
ISN 0085            8(7)=2.70
ISN 0086            F(8)=10.0
ISN 0087            8(8)=4.05
ISN 0088            F(9)=20.0
ISN 0089            8(9)=4.05
ISN 0090            F(10)=24.0
ISN 0091            8(10)=1.22
ISN 0092            F(11)=32.0
ISN 0093            8(11)=1.22
ISN 0094            F(12)=37.0
ISN 0095            8(12)=2.30
ISN 0096            F(13)=57.0
ISN 0097            8(13)=2.30
ISN 0098            F(14)=75.0
ISN 0099            8(14)=0.75
ISN 0100            F(15)=140.0
ISN 0101            8(15)=0.70
ISN 0102            F(16)=145.0
ISN 0103            8(16)=0.70
ISN 0104            F(17)=150.0
ISN 0105            8(17)=0.70
ISN 0106            F(18)=155.0
ISN 0107            8(18)=.700
ISN 0108            F(19)=160.0
ISN 0109            8(19)=0.70
ISN 0110            F(20)=165.0
ISN 0111            8(20)=0.70
ISN 0112            F(21)=170.0
ISN 0113            8(21)=0.70
ISN 0114            F(22)=175.0
```

12177.92
MS-2126
P.87

```
ISN 0115            G(22)=0.70
ISN 0116            F(23)=2000.
ISN 0117            G(23)=0.70
ISN 0118            DO 200 I=1,NP
ISN 0119            IF(FR.EQ.F(I))BASEQQ=G(I)
ISN 0121            IF(FR.EQ.F(I))GO TO 30
ISN 0123            IF(FR.GT.F(I))GO TO 200
ISN 0125            IF(FR.LT.F(I))GO TO 300
ISN 0127     200    CONTINUE
ISN 0128     300    X2=LOG(F(I))
ISN 0129            X1=LOG(F(I-1))
ISN 0130            Y2=G(I)
ISN 0131            Y1=G(I-1)
ISN 0132            EM=(Y2-Y1)/(X2-X1)
ISN 0133            BASEQQ=(LOG(FR)-X1)*EM+Y1
ISN 0134            GO TO 30
                 C  ****BASE ARS IN 3 DIRECTION****
ISN 0135     3      F(1)=.30
ISN 0136            G(1)=.001
ISN 0137            F(2)=1.0
ISN 0138            G(2)=.24
ISN 0139            F(3)=1.84
ISN 0140            G(3)=0.65
ISN 0141            F(4)=2.52
ISN 0142            G(4)=.65
ISN 0143            F(5)=3.80
ISN 0144            G(5)=0.90
ISN 0145            F(6)=5.3
ISN 0146            G(6)=0.90
ISN 0147            F(7)=7.4
ISN 0148            G(7)=2.64
ISN 0149            F(8)=10.0
ISN 0150            G(8)=2.64
ISN 0151            F(9)=12.0
ISN 0152            G(9)=3.35
ISN 0153            F(10)=21.5
ISN 0154            G(10)=3.35
ISN 0155            F(11)=24.0
ISN 0156            G(11)=2.64
ISN 0157            F(12)=32.0
ISN 0158            G(12)=2.64
ISN 0159            F(13)=34.5
ISN 0160            G(13)=4.00
ISN 0161            F(14)=36.5
ISN 0162            G(14)=4.0
ISN 0163            F(15)=41.5
ISN 0164            G(15)=4.75
ISN 0165            F(16)=59.0
ISN 0166            G(16)=4.75
ISN 0167            F(17)=64.0
ISN 0168            G(17)=4.0
ISN 0169            F(18)=73.0
ISN 0170            G(18)=4.0
ISN 0171            F(19)=95.0
ISN 0172            G(19)=1.75
ISN 0173            F(20)=150.
ISN 0174            G(20)=1.0
ISN 0175            F(21)=160.
```

12177.92
MS-2126
p82

```
ISN 0176            G(21)=1.00
ISN 0177            F(22)=170.
ISN 0178            G(22)=1.0000
ISN 0179            F(23)=2000.
ISN 0180            G(23)=1.00
ISN 0181            DO 40 I=1,NP
ISN 0182            IF(FR.EQ.F(I))BASEQG=G(I)
ISN 0184            IF(FR.EQ.F(I))GO TO 30
ISN 0186            IF(FR.GT.F(I))GO TO 40
ISN 0188            IF(FR.LT.F(I))GO TO 50
ISN 0190      40    CONTINUE
ISN 0191      50    X2=LOG(F(I))
ISN 0192            X1=LOG(F(I-1))
ISN 0193            Y2=G(I)
ISN 0194            Y1=G(I-1)
ISN 0195           EM=(Y2-Y1)/(X2-X1)
ISN 0196           BASEQG=(LOG(FR)-X1)*EM+Y1
ISN 0197      30    RETURN
ISN 0198            END
```

12177.92
MS-2136
P.89

REQUESTED OPTIONS: OBJ,SIZE(640K)

OPTIONS IN EFFECT: NAME(MAIN) OPTIMIZE(2) LINECOUNT(60) SIZE(0640K) AUTODBL(NONE)
SOURCE EBCDIC NOLIST NODECK OBJECT MAP NOFORMAT GOSTMT NOXREF NOALC NOANSF TERMINAL FLAG(I)

```
                C
                C   BASE RESPONSE SPECTRA AT STRUCTURALDAMPING
                C
   ISN 0002         FUNCTION BASEG(FR,N)
   ISN 0003         DIMENSION F(100),G(100)
   ISN 0004         NP=18
   ISN 0005         IF(N.GT.1) GO TO 2
   ISN 0007         F(1)=1.
   ISN 0008         G(1)=.88
   ISN 0009         F(2)=3.0
   ISN 0010         G(2)=1.76
   ISN 0011         F(3)=4.0
   ISN 0012         G(3)=2.48
   ISN 0013         F(4)=5.5
   ISN 0014         G(4)=1.92
   ISN 0015         F(5)=6.5
   ISN 0016         G(5)=1.44
   ISN 0017         F(6)=9.0
   ISN 0018         G(6)=.88
   ISN 0019         F(7)=11.0
   ISN 0020         G(7)=.88
   ISN 0021         F(8)=21.
   ISN 0022         G(8)=.58
   ISN 0023         F(9)=30.
   ISN 0024         G(9)=.96
   ISN 0025         F(10)=40.
   ISN 0026         G(10)=1.84
   ISN 0027         F(11)=60.
   ISN 0028         G(11)=2.48
   ISN 0029         F(12)=100.
   ISN 0030         G(12)=2.0
   ISN 0031         F(13)=120.
   ISN 0032         G(13)=1.68
   ISN 0033         F(14)=220.
   ISN 0034         G(14)=0.0
   ISN 0035         F(15)=700.0
   ISN 0036         G(15)=0.0
   ISN 0037         F(16)=800.
   ISN 0038         G(16)=0.0
   ISN 0039         F(17)=900.
   ISN 0040         G(17)=0.0
   ISN 0041         F(18)=950.
   ISN 0042         G(18)=0.0
   ISN 0043         DO 10 I=1,NP
   ISN 0044         IF(FR.EQ.F(I))BASEG=G(I)
   ISN 0046         IF(FR.EQ.F(I))GO TO 30
   ISN 0048         IF(FR.GT.F(I))GO TO 10
   ISN 0050         IF(FR.LT.F(I))GO TO 20
   ISN 0052    10   CONTINUE
   ISN 0053    20   X2=LOG(F(I))
   ISN 0054         X1=LOG(F(I-1))
   ISN 0055         Y2=G(I)
   ISN 0056         Y1=G(I-1)
```

12177.92
NS-2126
P.90

```
ISN 0057            EM=(Y2-Y1)/(X2-X1)
ISN 0058            BASEG=(LOG(FR)-X1)*EM+Y1
ISN 0059            GO TO 30
ISN 0060      2     IF(M.GT.2) GO TO 3
              C  *****BASE ARS IN 2 DIRECTION*****
ISN 0062            F(1)=1.
ISN 0063            G(1)=.56
ISN 0064            F(2)=5.0
ISN 0065            G(2)=.48
ISN 0066            F(3)=7.0
ISN 0067            G(3)=.88
ISN 0068            F(4)=9.0
ISN 0069            G(4)=1.32
ISN 0070            F(5)=12.
ISN 0071            G(5)=1.60
ISN 0072            F(6)=15.
ISN 0073            G(6)=1.60
ISN 0074            F(7)=18.
ISN 0075            G(7)=1.36
ISN 0076            F(8)=25.0
ISN 0077            G(8)=.8
ISN 0078            F(9)=33.
ISN 0079            G(9)=.48
ISN 0080            F(10)=38.
ISN 0081            G(10)=.80
ISN 0082            F(11)=45.
ISN 0083            G(11)=1.32
ISN 0084            F(12)=60.0
ISN 0085            G(12)=1.32
ISN 0086            F(13)=70.
ISN 0087            G(13)=1.08
ISN 0088            F(14)=90.0
ISN 0089            G(14)=.88
ISN 0090            F(15)=120.
ISN 0091            G(15)=.72
ISN 0092            F(16)=140.
ISN 0093            G(16)=.46
ISN 0094            F(17)=300.
ISN 0095            G(17)=.38
ISN 0096            F(18)=700.
ISN 0097            G(18)=.38
ISN 0098            DO 200 I=1,NP
ISN 0099            IF(FR.EQ.F(I))BASEG=G(I)
ISN 0101            IF(FR.EQ.F(I))GO TO 30
ISN 0103            IF(FR.GT.F(I))GO TO 200
ISN 0105            IF(FR.LT.F(I))GO TO 300
ISN 0107      200   CONTINUE
ISN 0108      300   X2=LOG(F(I))
ISN 0109            X1=LOG(F(I-1))
ISN 0110            Y2=G(I)
ISN 0111            Y1=G(I-1)
ISN 0112            EM=(Y2-Y1)/(X2-X1)
ISN 0113            BASEG=(LOG(FR)-X1)*EM+Y1
ISN 0114            GO TO 30
              C  *****BASE ARS IN 3 DIRECTION*****
ISN 0115      3     F(1)=1.
ISN 0116            G(1)=.88
ISN 0117            F(2)=3.0
```

12177.92
MS-2126
P91

```
ISN 0118            G(2)=1.76
ISN 0119            F(3)=4.0
ISN 0120            G(3)=2.48
ISN 0121            F(4)=5.5
ISN 0122            G(4)=1.92
ISN 0123            F(5)=6.5
ISN 0124            G(5)=1.44
ISN 0125            F(6)=9.0
ISN 0126            G(6)=.88
ISN 0127            F(7)=11.0
ISN 0128            G(7)=.88
ISN 0129            F(8)=21.
ISN 0130            G(8)=.56
ISN 0131            F(9)=30.
ISN 0132            G(9)=.96
ISN 0133            F(10)=40.
ISN 0134            G(10)=1.04
ISN 0135            F(11)=60.
ISN 0136            G(11)=2.40
ISN 0137            F(12)=100.
ISN 0138            G(12)=2.0
ISN 0139            F(13)=120.
ISN 0140            G(13)=1.08
ISN 0141            F(14)=220.
ISN 0142            G(14)=0.0
ISN 0143            F(15)=700.0
ISN 0144            G(15)=0.0
ISN 0145            F(16)=800.
ISN 0146            G(16)=.0
ISN 0147            F(17)=900.
ISN 0148            G(17)=0.0
ISN 0149            F(18)=950.
ISN 0150            G(18)=0.0
ISN 0151            DO 40 I=1,NP
ISN 0152            IF(FR.EQ.F(I))BASEG=G(I)
ISN 0154            IF(FR.EQ.F(I))GO TO 30
ISN 0156            IF(FR.GT.F(I))GO TO 40
ISN 0158            IF(FR.LT.F(I))GO TO 50
ISN 0160     40     CONTINUE
ISN 0161     50     X2=LOG(F(I))
ISN 0162            X1=LOG(F(I-1))
ISN 0163            Y2=G(I)
ISN 0164            Y1=G(I-1)
ISN 0165           EM=(Y2-Y1)/(X2-X1)
ISN 0166           BASEG=(LOG(FR)-X1)*EM+Y1
ISN 0167     30    RETURN
ISN 0168           END
```

12177.92
MS-2126
p.92

```
REQUESTED OPTIONS: OBJ,SIZE(640K)

OPTIONS IN EFFECT: NAME(MAIN) OPTIMIZE(2) LINECOUNT(60) SIZE(0640K) AUTODBL(NONE)
                   SOURCE EBCDIC NOLIST NODECK OBJECT MAP NOFORMAT GOSTMT NOXREF NOALC NOAMSF TERMINAL FLAG(I)

                C
                C
   ISN 0002             FUNCTION  FIG1(XX)
   ISN 0003             DIMENSION X(100),Y(100)
   ISN 0004             X(1)=0.
   ISN 0005             Y(1)= 1.
   ISN 0006             X(2)= .3
   ISN 0007             Y(2)= 1.3
   ISN 0008             X(3)= .50
   ISN 0009             Y(3)= 1.50
   ISN 0010             X(4)= .6
   ISN 0011             Y(4)= 1.8
   ISN 0012             X(5)=.7
   ISN 0013             Y(5)=2.5
   ISN 0014             X(6)=.8
   ISN 0015             Y(6)=3.5
   ISN 0016             X(7)=.9
   ISN 0017             Y(7)=5.1
   ISN 0018             X(8)=.95
   ISN 0019             Y(8)=6.5
   ISN 0020             X(9)=.97
   ISN 0021             Y(9)=6.8
   ISN 0022             X(10)=1.
   ISN 0023             Y(10)=7.2
   ISN 0024             X(11)=1.03
   ISN 0025             Y(11)=6.9
   ISN 0026             X(12)=1.05
   ISN 0027             Y(12)=6.
   ISN 0028             X(13)=1.1
   ISN 0029             Y(13)=5.2
   ISN 0030             X(14)=1.2
   ISN 0031             Y(14)=3.5
   ISN 0032             X(15)=1.3
   ISN 0033             Y(15)=2.8
   ISN 0034             X(16)=1.5
   ISN 0035             Y(16)=2.3
   ISN 0036             X(17)=2.0
   ISN 0037             Y(17)=1.8
   ISN 0038             X(18)=500.
   ISN 0039             Y(18)=1.8
   ISN 0040             DO 10 I=1,100
   ISN 0041             IF(XX.EQ.X(I))FIG1=Y(I)
   ISN 0043             IF(XX.EQ.X(I))GO TO 30
   ISN 0045             IF(XX.GT.X(I))GO TO 10
   ISN 0047             IF(XX.LT.X(I))GO TO 20
   ISN 0049     10      CONTINUE
   ISN 0050     20      X2=X(I)
   ISN 0051             X1=X(I-1)
   ISN 0052             Y2=Y(I)
   ISN 0053             Y1=Y(I-1)
   ISN 0054             EM=(Y2-Y1)/(X2-X1)
   ISN 0055             FIG1=(XX-X1)*EM+Y1
   ISN 0056     30      RETURN
```

MS-2126
12/7.92
P.93

```
ISN 0057          END
```

MS-2126
12/27/92
P.44

```
REQUESTED OPTIONS: OBJ,SIZE(640K)

OPTIONS IN EFFECT: NAME(MAIN) OPTIMIZE(2) LINECOUNT(60) SIZE(0640K) AUTODBL(NONE)
                   SOURCE EBCDIC NOLIST NODECK OBJECT MAP NOFORMAT GOSTMT NOXREF NOALC NOANSF TERMINAL FLAG(I)

                C
                C
  ISN 0002            FUNCTION  FIG3(XX)
  ISN 0003            DIMENSION X(100),Y(100)
  ISN 0004            X(1)=0.5
  ISN 0005            Y(1)=1.7
  ISN 0006            X(2)=.7
  ISN 0007            Y(2)=2.4
  ISN 0008            X(3)=.07
  ISN 0009            Y(3)=4.
  ISN 0010            X(4)=.95
  ISN 0011            Y(4)=7.
  ISN 0012            X(5)=1.
  ISN 0013            Y(5)=8.
  ISN 0014            X(6)=1.02
  ISN 0015            Y(6)=7.90
  ISN 0016            X(7)=1.1
  ISN 0017            Y(7)=5.1
  ISN 0018            X(8)=1.2
  ISN 0019            Y(8)=3.7
  ISN 0020            X(9)=1.3
  ISN 0021            Y(9)=2.8
  ISN 0022            X(10)=1.4
  ISN 0023            Y(10)=2.3
  ISN 0024            X(11)=1.6
  ISN 0025            Y(11)=1.7
  ISN 0026            X(12)=1.8
  ISN 0027            Y(12)=1.4
  ISN 0028            X(13)=2.5
  ISN 0029            Y(13)=1.1
  ISN 0030            X(14)=500.
  ISN 0031            Y(14)=1.
  ISN 0032            DO 10 I=1,100
  ISN 0033            IF(XX.EQ.X(I))FIG3=Y(I)
  ISN 0035            IF(XX.EQ.X(I))GO TO 30
  ISN 0037             IF(XX.GT.X(I))GO TO 10
  ISN 0039             IF(XX.LT.X(I))GO TO 20
  ISN 0041      10     CONTINUE
  ISN 0042      20     X2=X(I)
  ISN 0043             X1=X(I-1)
  ISN 0044             Y2=Y(I)
  ISN 0045             Y1=Y(I-1)
  ISN 0046             EH=(Y2-Y1)/(X2-X1)
  ISN 0047             FIG3=(XX-X1)*EH+Y1
  ISN 0048      30     RETURN
  ISN 0049             END
```

12177.92
MS-2126
P.95

Attachment - 5

12177.92
MS-2126
P.96

MINUTES OF MEETING
ALIFICATION OF SOLENOID VALVES IN MSIVs
NE MILE POINT NUCLEAR STATION UNIT 2
NIAGARA MOHAWK POWER CORPORATION

Held in the Offices of Target Rock Corp.
1966 E. Broadhollow Road
E. Farmingdale, NY
October 6, 1986

Present for Target Rock Corp. (TRC):
V. Liantonio
S. Keridas
J. Ostroff

Present for Stone & Webster Engineering Corp. (SWEC):
B. Niyogi
D. Bhargava

PURPOSE:

To determine the seismic/dynamic qualification action plan for Target Rock 2" SOVs to be used in the MSIV actuators.

DISCUSSION:

TRC stated that the pilot valves being purchased from TRC are structurally similar to those previously used in the MSIVs. It was established that the primary concern for the demonstration of operability during a seismic/dynamic event in this application of the SOVs (i.e. the MSIV hydraulic "latch") is related to a possible binding of the stem to the bonnet tube which supports the coil. It was mutually agreed that the following existing qualification documents shall be utilized for the overall dynamic qualification of the valves:

1. Wyle tests of the actuator to demonstrate structural integrity, including adequacy of the upper bracket which may have a resonance of less than 100 Hz. SWEC noted that the g levels in this test were more severe than the NMP2 required levels. TRC noted that this test, with the valve without pressure, is seismically worse than a test with valve fully pressurized.

2. Dynamic tests of 1" valve in TRC report 3556A. These tests were previously used by TRC in their report 2252B to qualify other 2" valves purchased under spec. P304X for hydrodynamic loads to a level of 6 g's. TRC will use the same rationale (as in 2252B) to extend this qualification to the new 2" valves.

3. TRC's static pull test of 2" valves in report 2252B which uses a force of 255 lbs. This test provides additional justification of operability and is valid provided NMP2's required levels are less than this force.

The following action items were identified:

a. SWEC to model the valve using the appropriate mass/stiffness/dimensions (which were provided by TRC, including the pertinent drawings) and determine an equivalent required force or g value which produces the maximum deflection in the bonnet tube. SWEC will transmit this load to TRC by 10/10/86. If this force is less than 255 lbs, TRC will submit (or give reference to) documents discussed in items 2 and 3. SWEC will supplement TRC documents with Wyle test results, to achieve complete qualification. SWEC will also provide all qualification requirements in the specification.

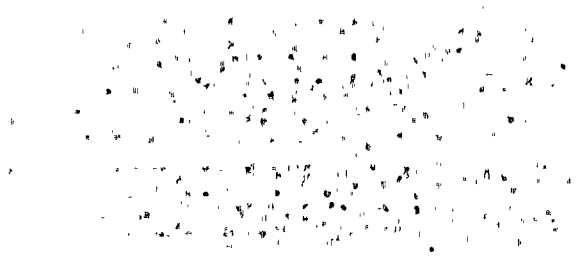

12177.92
MS-2126
P97

b. Should the SWEC calculated required loading be higher than 255 lbs., TRC will perform a static pull test at their facility to the new requirements; and show functional adequacy. TRC stated that this is a simple test and can be conducted in a day.

DBhargava

D. Bhargava
10/7/86

c.c. V. Liantonio (TRC)
A. Blum
M. Durha
J. Jones
D. Jones
B. Nijogi
C. Zehrer

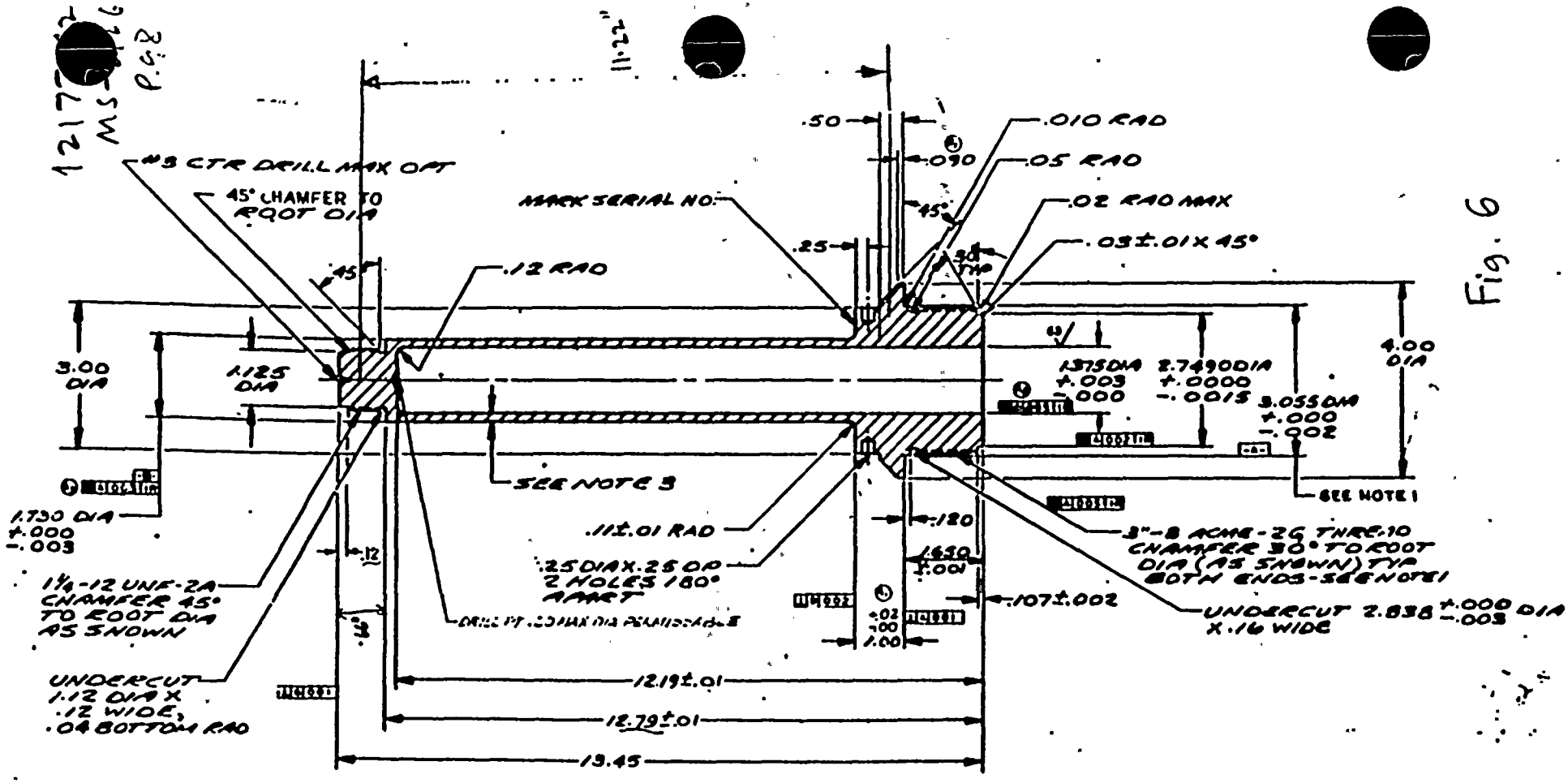
#3 CTR DRILL MAX OFF
45° CHAMFER TO ROOT DIA
MARK SERIAL NO.
.12 RAD
.50
.090
.010 RAD
.05 RAD
.02 RAD MAX
.03±.01 X 45°
3.00 DIA
1.125 DIA
1.730 DIA +.000 -.003
1¼-12 UNF-2A CHAMFER 45° TO ROOT DIA AS SHOWN
UNDERCUT 1.12 DIA X .12 WIDE, .04 BOTTOM RAD
SEE NOTE 3
.11±.01 RAD
.250 DIA X .250 DP 2 HOLES 180° APART
1.375 DIA +.003 -.000
2.749 DIA +.0000 -.0015
3.055 DIA +.000 -.002
4.00 DIA
SEE NOTE 1
.120
1.630 ±.001
.107±.002
3"-8 ACME-2G THRD-10 CHAMFER 30° TO ROOT DIA (AS SHOWN) TYP BOTH ENDS-SEE NOTE 1
UNDERCUT 2.838 +.000 -.003 DIA X .16 WIDE
12.19±.01
12.79±.01
19.45

Fig. 6

12177
MC-216
P99

Fig. 7

PART NO.	A DIA	B DIA	C DIA	D DIA	E DIM	F DIM	G DIA
300990-1	1.490	1.695	1.850	2.25	1.62	10.81	1.685
300990-2	1.815	1.820	1.995	2.60	1.62	10.81	1.810
300990-3	1.734	1.739	1.890	2.25	1.62	10.81	1.730
300990-4	1.734	1.739	1.890	2.25	1.12	10.81	1.730

Wt = 28 lb

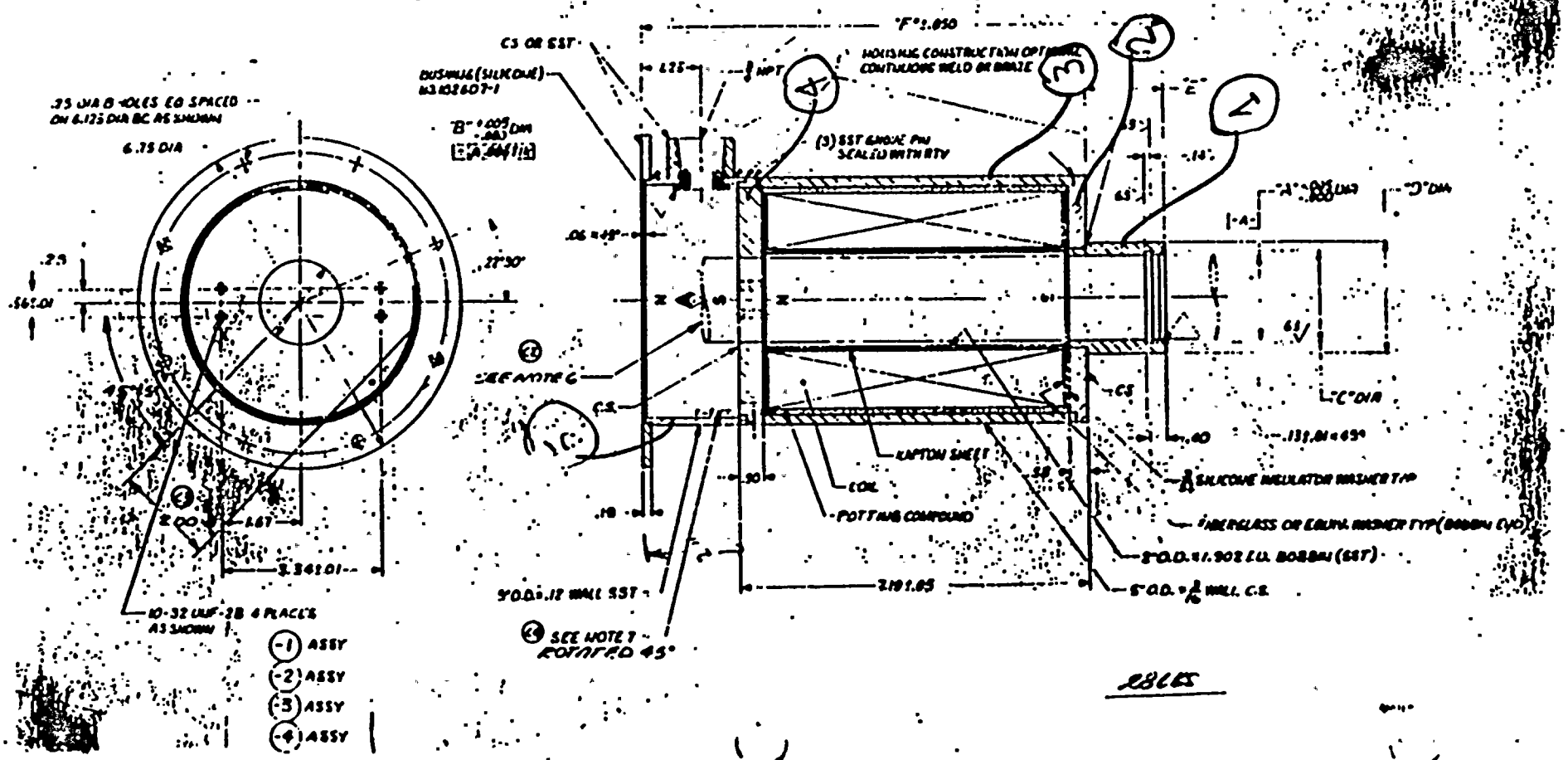

28 LBS

12177-92
MS-2126
P-100

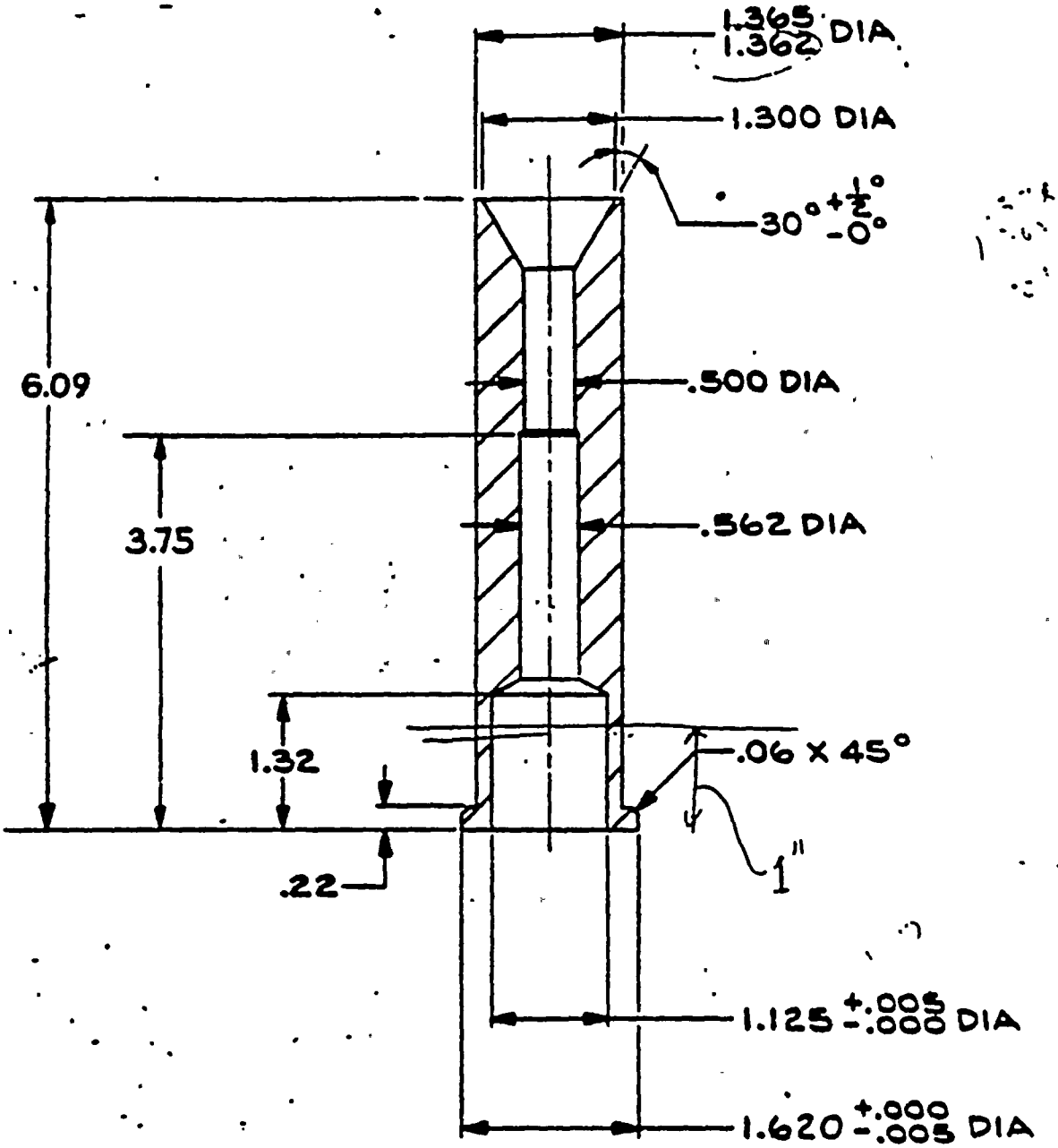

Fig. 8

12177.92
MS-2126
P.101

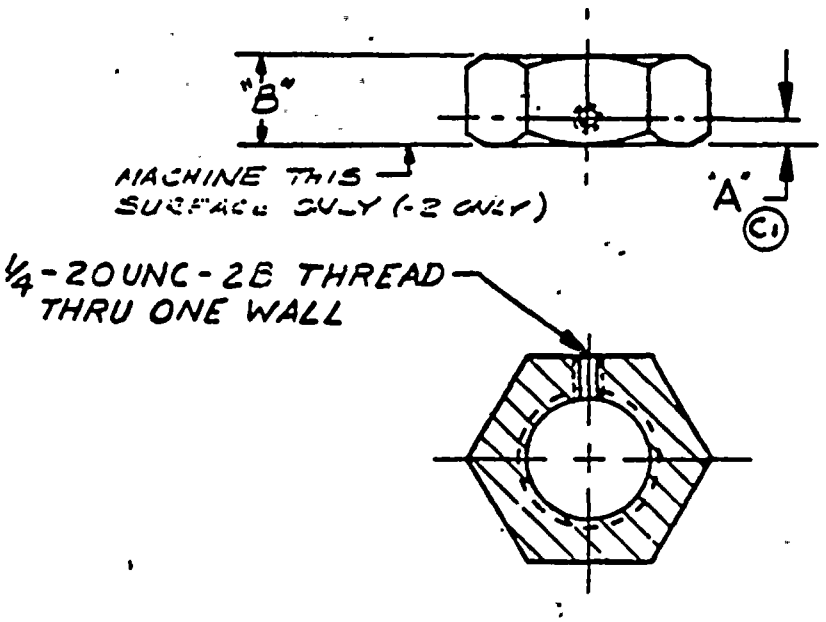

Fig. 9

12177.92
MS-2126
P.102

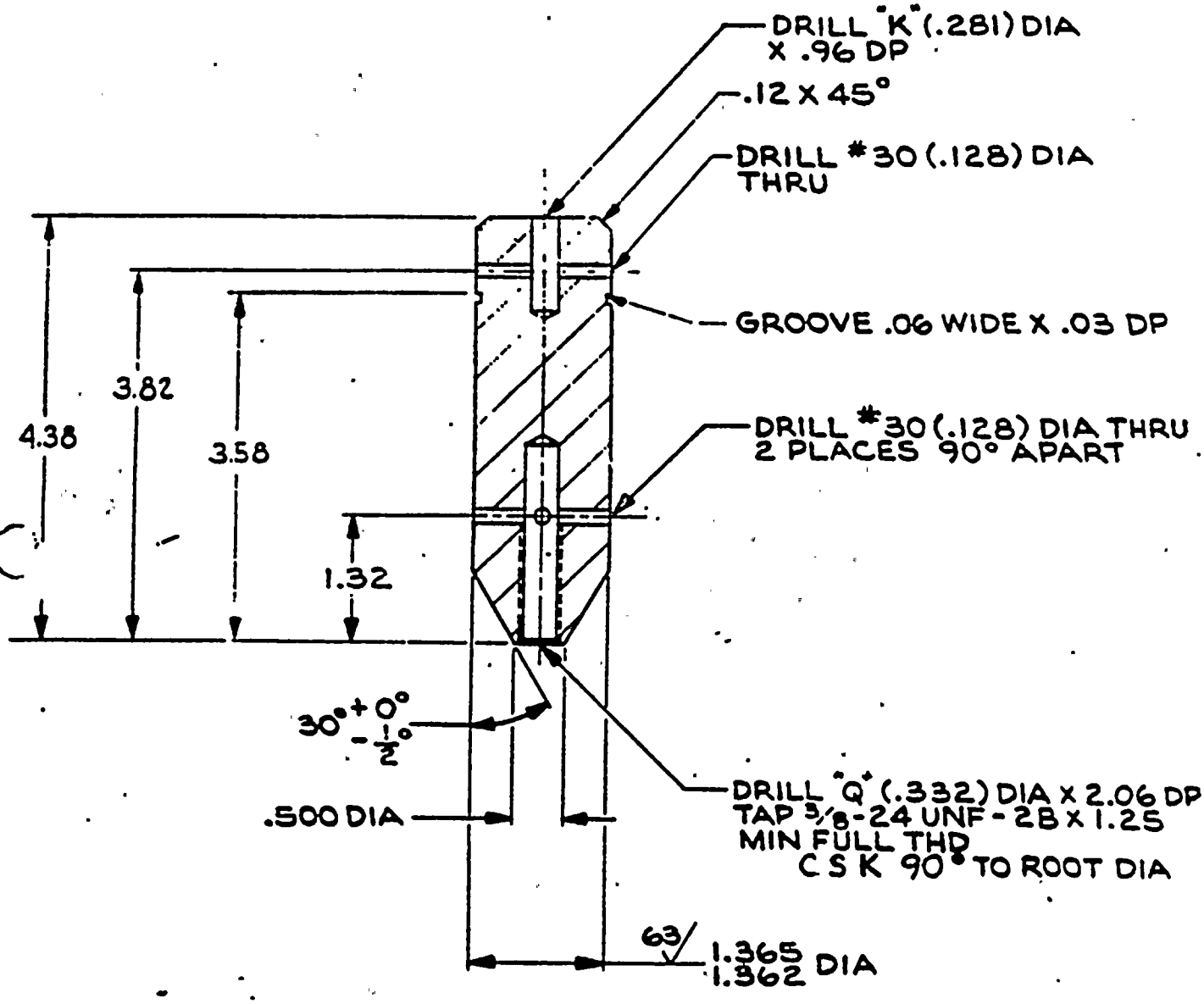

Fig. 10

Description of Reference 2 - Attachment 2

"Design-Report and Seismic Analysis of Solenoid Operated Valve", Target Rock Report No. 2252, Revision C, dated October 1986, SWEC File No. STRS 05.360-5067A.

This report provides seismic/dynamic qualification of the 2" diameter solenoid valves, which are components of the MSIV actuator. The qualification is accomplished by analysis, dynamic testing of a similar valve for seismic/hydrodynamic loads (Appendix D), and a static pull testing conducted on an identical valve.

Addendum III of this report is related to MSIV solenoid valve. A static pull test was conducted to demonstrate operability under dynamic load and design pressure. The valve was tested with and without a spring spacer. With this spacer, the valve functioned successfully. Without the spacer, the opening time exceeded the allowable limit of 1 second. (Note: The valves installed at NMP2 are <u>with</u> this spacer). Also included in this report is the similarity analysis among the various valves tested and the valves used in the actuator.

STONE & WEBSTER ENGINEERING CORPORATION

SUPPLIER'S DOCUMENT DATA FORM

NINE MILE POINT NUCLEAR STATION - UNIT 2
NIAGARA MOHAWK POWER CORPORATION
J.O. 12177

RESPONSIBLE ENGINEER (E1) (16): J. MCDONOUGH

RESP DISP (E1): P

SUPERSEDES SWEC FILE NO (E1) (1): TYPE | ID NO | REV

REVIEW REQUIREMENTS (R,E1) (18): REVIEW REQUIRED ☐ REVIEW NOT REQUIRED ☐

REMARKS (E1) (2): CODE, OR SPECIAL REQUIREMENTS

REVIEWER (E1) (19): D.BHARGAVA

DATE TO REVIEW (C) (20): MON 10 DAY 24 YR 86

P O NUMBER (C) (3): P803D

DOCUMENT TYPE (E1) (4):

RELEASED FOR (R,E2) (21): RETURN TO SUPPLIER ☐ ENG. & DESIGN ☐ FABRICATION ☐

DIRECTIONS TO SITE (R,E2) (22): FOR CONSTRUCTION ☐ NOT FOR CONSTRUCTION ☐

MFR'S DOC. NO (E1) (5) (INCLUDE DOC REV OR DATE):

DOCUMENT STATUS (R,E2) (23):

✓	APP — APPROVED/ACCEPTABLE FOR USE
	AAR — APPROVED AS REVISED
	UNA — UNACCEPTABLE
	BLT — AS-BUILT
	FIO — FOR INFORMATION ONLY

MFR'S NAME (C) (6): CROSBY / TARGET ROCK

S & W EQUIP. I.D. CODE (E1) (7): 2MSS-HYV67A-D

COMPONENT TYPE (E1) (8): MSIV

MFG EQUIP I.D. (E1) (9):

AREA DESIGNATION CODES (E1) (10):

7,8,9 & 10 CONTINUED ON ATTACHMENT(S): YES ☐ NO ☒

MFG. CODE (E1) (11):

REVIEWER'S DATE STAMP (R) (24): DBhargava 10/24/86

DATE REC'D (12): MON 10 DAY 24 YR 86

MAX DAYS IN REVIEW (13): 10

RESPONSIBLE ENGINEER'S DATE STAMP (E2) (ISSUE DATE) (25): [signature] for JMCDONOUGH

FUNCTION TITLE (E1) (14): SEISMIC/DYNAMIC QUALIFICATION FOR 2" SOV'S

RESUBMITTAL REQ'D (E2) (26): YES NO

RESUB. REQ. DATE (E2) (27): MON DAY YR

SWEC FILE NO. (E1) (15): TYPE STRS ID NO 05.360-5067 REV. A (C)

TRANSMITTAL DATE (C) (28):

TRANSMITTAL NUMBER (C) (29):

(C) DOCUMENT CONTROL (R) REVIEWER (E1) RESPONSIBLE ENG PRIOR TO REVIEW (E2) RESPONSIBLE ENG AFTER REVIEW

ADDITIONAL REVIEWERS (E1): (30) NONE

REVIEWER'S COMMENTS (R): (31)

This report approves seismic/dynamic qualification of 2" TRC SOV's to be used in the MSIV actuator. Both pilot type and reworked balanced piston type (E&DCR #M10031) with a spacer which preloads the spring (per TRC drawing 81A1-001 Rev E) are approved.

However, it is noted that if a balanced piston valve without the spacer is used, the anomaly (ie the exceedence of 1 sec response time required per SPEC E3-1003, G&W to TRC, dated 2/10/82) noted in this test report must be resolved.