UNITED STATES
NUCLEAR REGULATORY COMMISSION
WASHINGTON, D. C. 20555

October 7, 1986

Docket No. 50-220

LICENSEE: Niagara Mohawk Power Corporation

FACILITY: Nine Mile Point Nuclear Station, Unit No. 1

SUBJECT: SEPTEMBER 24, 1986 MEETING WITH NIAGARA MOHAWK POWER CORPORATION (NMPC) TO DISCUSS STATUS OF THE CONTROL ROD DRIVE PENETRATION REPAIR PROGRAM

On September 24, 1986, the staff met with representatives of Niagara Mohawk Power Corporation (NMPC), the licensee, and their consultant, MPR Associates, to discuss the status of the repair program for the leaking control rod drive (CRD) penetrations at the Nine Mile Point Nuclear Station, Unit No. 1 (NMP-1). A list of attendees is attached as Enclosure 1. Enclosure 2 is a copy of the slides used by the licensee in its presentation of the repair program under consideration.

The licensee, in its presentation, discussed the background of the CRD penetration problem. In short, ten CRD penetrations (stub tubes) were rolled during the 1984 refueling outage. In October 1984, NMPC informed the staff of the development of an in-service inspection program for the CRD penetrations. This program included visual inspection for leakage during hydrostatic tests at refueling outages, close circuit TV inspection of stub tube cracking, and ultrasonic testing of at least two previously rolled housings. In a meeting held with the staff on November 18, 1985, NMPC presented guidelines for the repair of the leaking CRD penetrations. During the 1986 refueling outage, one CRD housing was rolled for the first time and two housings were rerolled (had previously been rolled in 1984). During the August 8, 1986 maintenance outage, an additional CRD housing was rolled successfully. All the penetrations repaired in 1984 and 1986 successfully passed post repair pressure tests with no leakage.

NMPC proposed that the repair method and the leakage limits presented to the staff in Table 1 of Enclosure 2, provides assurance of the stub tubes acceptability for continued operation. In addition, inspection of the CRD penetrations will also be conducted during nonrefueling outages in which drywell entries are made. NMPC informed the staff that the determination to roll or reroll a penetration will be evaluated on a case-by-case basis, and that operation with known leakage will be allowed with up to 0.1 GPM leaking from any one penetration. The total leakage during hydrostatic pressure tests will be limited to 1.0 GPM from all penetrations. NMPC is seeking approval of their guidelines in the near term.

In parallel with these actions, NMPC has initiated a development program to design and qualify a backup mechanical seal assembly for CRD penetrations which may exceed the leakage criteria if rolling efforts are unsuccessful. The first phase of this work including the design, fabrication, and testing

of a prototype mechanical seal was recently completed. The final stage of development is underway and involves the development of seal installation tooling. NMPC estimates this work will be completed and that the feasibility and practicality of the backup mechanical seal will be demonstrated within approximately 8 months. NMPC proposes that the seal repairs be implemented only if rolling is unsuccessful and informed the staff that the estimated time to prepare for seal installation after a decision to implement is 24-30 months.

Original signed by

Janet L. Kelly, Project Manager
BWR Project Directorate #1
Division of PWR Licensing

Enclosures:
As stated

DISTRIBUTION
Docket File
NRC PDR
Local PDR
see attached list

DBL:BWD1	DBL:BWD1 JK	DBL:BWEB	DBL:BWD1
CJamerson	JKelly/pn	RHermann	JZwolinski
10/06/86	10/02/86	10/6/86	10/6/86

Niagara Mohawk Power Corporation

Nine Mile Point Nuclear Station,
Unit No. 1

cc:

Troy B. Conner, Jr., Esquire
Conner & Wetterhahn
Suite 1050
1747 Pennsylvania Avenue, N. W.
Washington, D. C. 20006

Frank R. Church, Supervisor
Town of Scriba
R. D. #2
Oswego, New York 13126

Niagara Mohawk Power Corporation
ATTN: Mr. Thomas Perkins
Plant Superintendent
Nine Mile Point Nuclear Station
Post Office Box 32
Lycoming, New York 13093

Resident Inspector
U. S. Nuclear Regulatory Commission
Post Office Box 126
Lycoming, New York 13093

John W. Keib, Esquire
Niagara Mohawk Power Corporation
300 Erie Boulevard West
Syracuse, New York 13202

Regional Administrator, Region I
U. S. Nuclear Regulatory Commission
631 Park Avenue
King of Prussia, Pennsylvania 19406

Mr. Jay Dunkleberger
Division of Policy Analysis
and Planning
New York State Energy Office
Agency Building 2
Empire State Plaza
Albany, New York 12223

Niagara Mohawk Power Corporation
Attn: Mr. C. V. Mangan
Senior Vice President
c/o Miss Catherine R. Seibert
300 Erie Boulevard West
Syracuse, New York 13202

ENCLOSURE 1

SEPTEMBER 24, 1986 - MEETING WITH NMPC

TO DISCUSS LEAKING CONTROL ROD DRIVE

PENETRATIONS

Name	Affiliation	Title
Janet Kelly	NRC/DBL/BWD-1	Project Manager
Raymond J. Pasternak	NMPC	Mgr-Nuc Consulting
Robert Hermann	NRC/DBL/BWR Eng	Section Leader
Bill Schmidt	MPR	Engineer
T. J. Perkins	NMPC	Gen. Supt.
C. V. Mangan	NMPC	Sr. V.P.
T. W. Roman	NMPC	Station Supt. NMP-1
S. W. Wilczek, Jr.	NMPC	Manager Nuclear Technology
Peter Francisco	NMPC	Lead Licensing Eng.
H. Wm. McCurdy	MPR	Engineer
Brian L. Lipford	MPR	Engineer
John A. Zwolinski	NRR/DBL/BWD1	Project Director
H. F. Conrad	NRR/DBL/BEB	
H. K. Shaw	NRR/DBL/BEB	
W. S. Hazelton	NRR/DBL Eng	IGSCC Pgm Mgr.
Yueh-Li Li	NRR/DBL/BER	
Paul Cortland	NRC/OIE	Metallurgist
Lee Klosowski	NMPC	Lead Mechanical Engineer

NIAGARA MOHAWK POWER CORPORATION

NINE MILE POINT UNIT NO. 1

CONTROL ROD DRIVE (CRD)

PENETRATION REPAIR PROGRAM

STATUS REPORT

SEPTEMBER 1986

OUTLINE OF PRESENTATION

NMP-1 CRD PENETRATION REPAIR PROGRAM

I. INTRODUCTION AND BACKGROUND

A. PURPOSE

B. PLANT DESCRIPTION

C. CRD PENETRATION DESCRIPTION

D. DESCRIPTION OF PROBLEM

II. HISTORY OF EVALUATIONS/STATUS OF REPAIRS

A. CONTINGENCY PLANS AND INVESTIGATIONS COMPLETED PRIOR TO SPRING 1984 OUTAGE

B. INSPECTIONS AND REPAIRS TO CRD PENETRATIONS IN SPRING 1984 OUTAGE

1. INSPECTIONS

2. ROLL REPAIRS

C. CONTINGENCY PLANS AND INVESTIGATIONS TO PREPARE FOR SPRING 1986 OUTAGE

1. DEVELOPMENT OF ROLL REPAIR IMPROVEMENTS

2. IN-SERVICE INSPECTION PROGRAM

3. GUIDELINES FOR REPAIR OF LEAKING PENETRATIONS

D. INSPECTIONS AND REPAIRS TO CRD PENETRATIONS DURING SPRING 1986 OUTAGE

1. INSPECTIONS

2. ROLL REPAIRS

E. RECENT REPAIR/CURRENT STATUS

F. CODE COMPLIANCE AND LICENSING BASIS FOR REPAIR APPROACH

III. <u>BACKUP MECHANICAL SEAL DEVELOPMENT PROGRAM</u>

A. PURPOSE FOR MECHANICAL SEAL DEVELOPMENT

B. CE SEAL DEVELOPMENT

C. MPR MECHANICAL SEAL

- DEVELOPMENT PROGRAM
- MAIN FEATURES OF SEAL

D. CODE AND LICENSING BASIS FOR MECHANICAL SEAL

E. DEVELOPMENT STATUS OF MPR MECHANICAL SEAL

IV. <u>FUTURE PLANS FOR CRD REPAIR PROGRAM</u>

I. INTRODUCTION AND BACKGROUND

A. PURPOSE:

- o REVIEW BACKGROUND AND STATUS OF CRD PENETRATION LEAKAGE PROBLEMS
- o REACH AGREEMENT ON NMPC PLANS AND CRITERIA
  - LEAKAGE CRITERIA
  - INSPECTION PLAN
  - REPAIR CRITERIA
- o SUMMARIZE CONTINGENCY REPAIR PROGRAM

B. PLANT DESCRIPTION:

- o BWR, 1850 MW(T), 610 MW(E)
- o BEGAN COMMERCIAL OPERATION IN 1969
- o LOCATED ON THE SOUTHEAST SHORE OF LAKE ONTARIO IN OSWEGO COUNTY, NEW YORK
- o OPERATING CONDITIONS; 550 ^{o}F, 1030 PSIG

I. INTRODUCTION AND BACKGROUND (CON'D)

C. CRD PENETRATION DESCRIPTION:

- 129 CRD PENETRATIONS IN LOWER HEAD
- STUB TUBES - 304 SS, 7 1/2 " OD, 3/4 " WALL
- CRD HOUSINGS - 304 SS, 6" OD, 1/2" WALL
- STUB TUBE-TO-VESSEL WELD - PARTIAL PENETRATION INCONEL SHOP WELD
- CRD HOUSING-TO-STUB TUBE WELD - 308 SS PARTIAL PENETRATION FIELD WELD

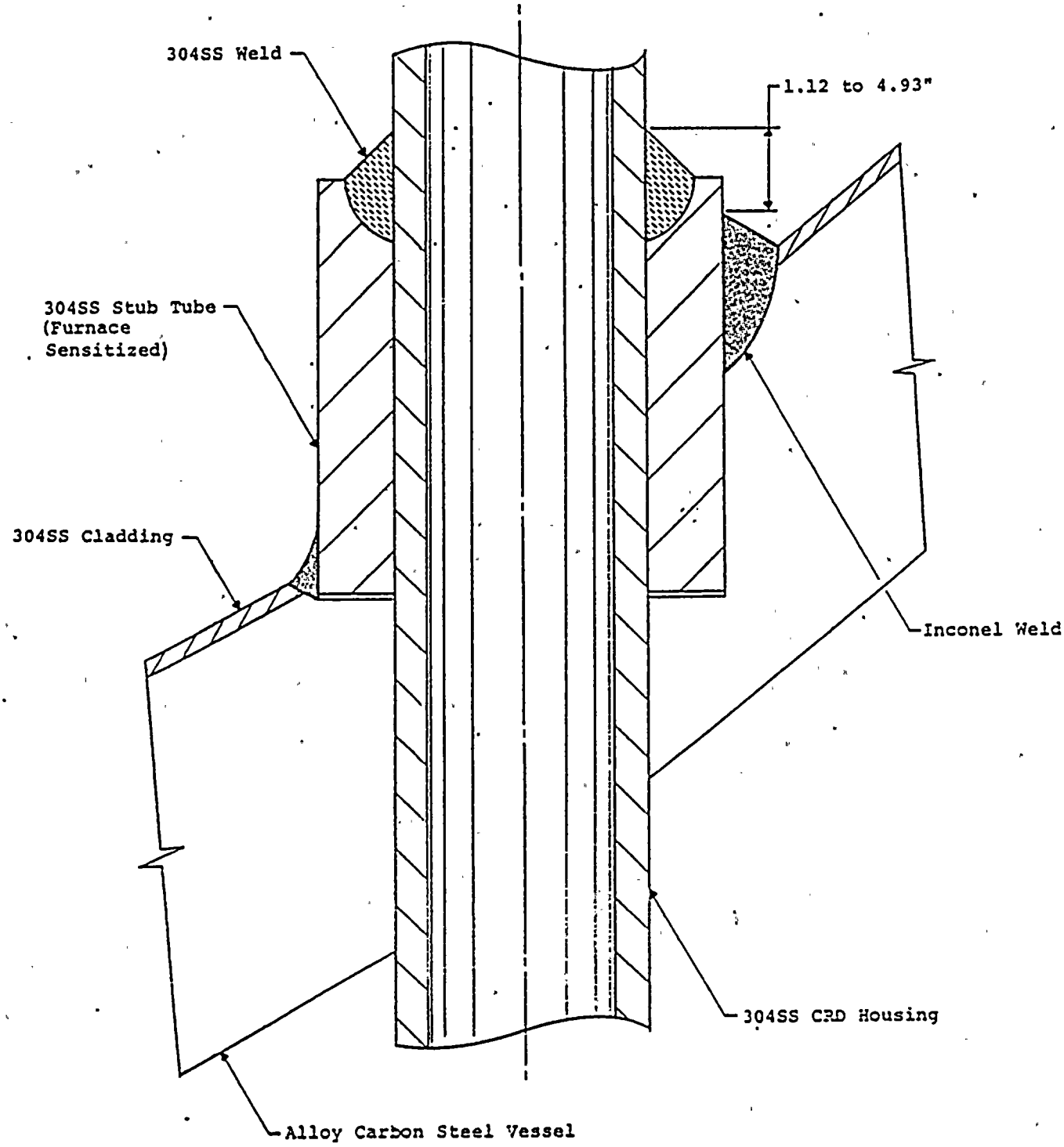

NMP-1 CRD PENETRATION

D. DESCRIPTION OF PROBLEM

CRD PENETRATION LEAKAGE AS A RESULT OF:

1. STUB TUBES WERE FABRICATED FROM 304 SS AND HEAT TREATED (SENSITIZED) WITH VESSEL DURING FABRICATION.

2. STRESS CORROSION CRACKS DEVELOPED IN STUB TUBES DURING PLANT OPERATION.

3. THROUGH-WALL CRACKING OF STUB TUBE CREATES LEAK PATH BETWEEN O.D. OF HOUSING AND VESSEL BORE PENETRATION.

II. HISTORY OF EVALUATIONS/STATUS OF REPAIRS

A. CONTINGENCY PLANS AND INVESTIGATIONS COMPLETED PRIOR TO SPRING 1984 OUTAGE

INVESTIGATIONS WERE PERFORMED FOR THE PURPOSE OF:

- EVALUATING THE POTENTIAL FOR CRACKING OF THE NMP-1 STUB TUBES BASED ON RELATED EXPERIENCE AT OTHER BWR PLANTS
- EVALUATING THE SAFETY IMPLICATIONS OF STUB TUBE CRACKS/LEAKS
- EVALUATING ALTERNATIVE CRD PENETRATION INSPECTION AND REPAIR TECHNIQUES
- DEVELOPING CONTINGENCY PLANS AND TOOLING FOR INSPECTION AND REPAIR OF NMP-1 CRD PENETRATIONS DURING SPRING 1984 OUTAGE

SAFETY IMPLICATIONS OF STUB TUBE CRACKS/LEAKS WERE REVIEWED AND FOUND NOT TO BE A SIGNIFICANT SAFETY CONCERN SINCE:

- THE STRUCTURAL INTEGRITY OF THE REACTOR VESSEL PRESSURE BOUNDARY IS NOT AFFECTED.

- THE ABILITY OF THE CRD PENETRATIONS/HOUSINGS TO PERFORM THE DESIGN FUNCTIONS HAS NOT CHANGED:

  - THERE IS NO ADVERSE EFFECT ON CRD OPERATION OR ABILITY TO SCRAM. PLANT OPERATION OR SAFE SHUTDOWN IS NOT AFFECTED.

  - CRD HOUSING EJECTION IS NOT POSSIBLE SINCE:

    A. THE HOUSING-TO-STUB TUBE WELD IS INTACT.

    B. THE STUB TUBE IS LOADED IN COMPRESSION AND IS NOT AFFECTED BY CRACKS.

    C. A MECHANICAL RESTRAINT SYSTEM IS PROVIDED UNDERNEATH THE LOWER VESSEL HEAD TO PREVENT EJECTION (SHOOT-OUT-STEEL).

- LEAKAGE FROM THE PENETRATIONS IS SMALL (DROPS PER MINUTE) AND CAN BE MONITORED BY EXISTING DRY WELL LEAKAGE MONITORING SYSTEMS (1/4 GPM SENSITIVITY).

ALTERNATIVE REPAIR APPROACHES WERE EVALUATED WHICH INCLUDED:

- EXPANSION ROLLING OF THE CRD HOUSING INTO THE VESSEL BORE
- GENERAL ELECTRIC "LONG-TERM" FIX INVOLVING REMOTE MACHINING OF STUB TUBE AND LOWER HEAD, INSTALLATION OF DRY CAISSON, COMPUTER CONTROLLED REMOTE WELDING OF A STUB TUBE SLEEVE
- MECHANICAL PACKING/GASKET REPAIRS INVOLVING INSTALLATION OF EXTERNAL AND/OR INTERNAL SEALS
- CE TYPE INTERNAL SLEEVE/PACKING INSTALLATION

THE EXPANSION ROLL REPAIR WAS SELECTED AS THE BEST CONTINGENCY REPAIR APPROACH FOR THE FOLLOWING REASONS:

1. THE ROLL REPAIR WAS KNOWN TO BE A STANDARD REPAIR TECHNIQUE HAVING FIELD EXPERIENCE IN THE POWER INDUSTRY AS WELL AS IN OTHER BWRs (BIG ROCK POINT, NUCLENOR, OYSTER CREEK, AND GARIGLIANO).

2. EXPERIENCE INDICATED THE REPAIR TO POSSIBLY BE A LONG-TERM FIX.

3. THE REPAIR COULD BE ACCOMPLISHED QUICKLY WITH MINIMAL TOOL/PROCEDURAL DEVELOPMENT.

4. OTHER REPAIR APPROACHES WOULD REQUIRE SIGNIFICANT DEVELOPMENT.

5. ROLL REPAIR HAD PREVIOUSLY BEEN APPROVED BY THE NRC FOR BWR REACTOR VESSELS.

SAFETY EVALUATIONS OF THE ROLL REPAIR APPROACH INDICATED THAT PREVIOUS SAFETY IMPLICATIONS WERE NOT AFFECTED AND THAT ROLLING PROVIDES ADDITIONAL HOUSING SUPPORT

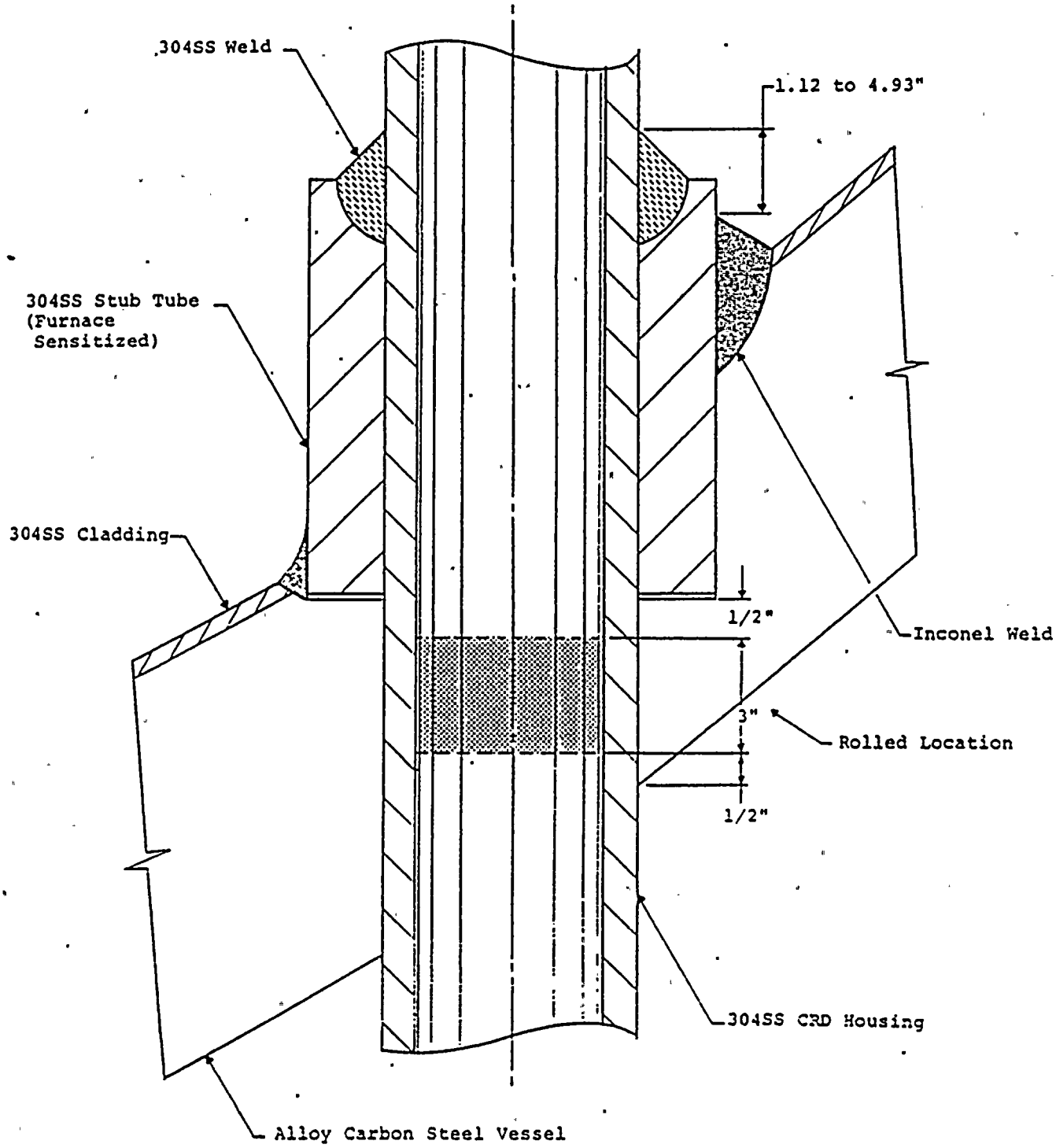

ROLLED AREA
OF NMP-1 CRD HOUSING

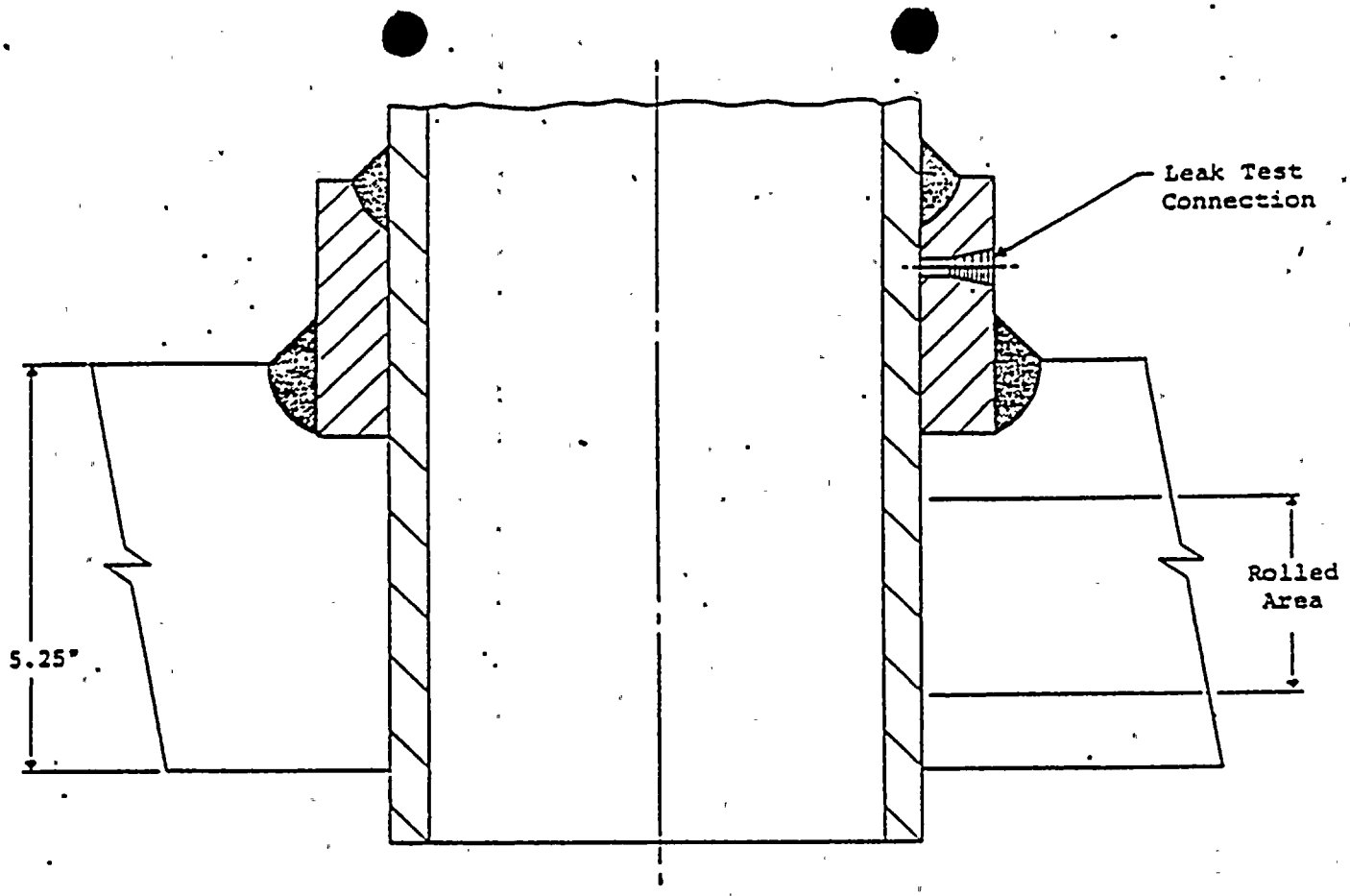

Type A Mock-Up

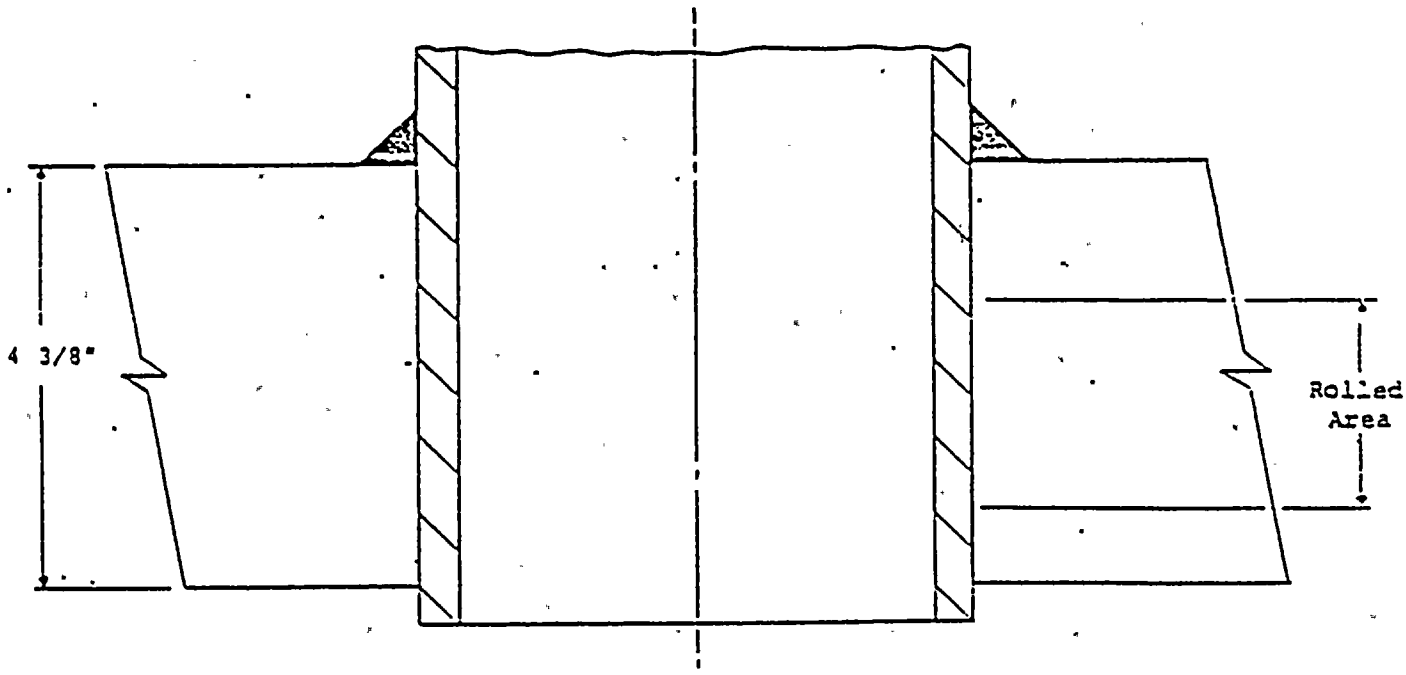

Type B Mock-Up

MOCK-UPS

B. INSPECTIONS AND REPAIRS TO CRD PENETRATIONS IN SPRING 1984 OUTAGE

1. INSPECTIONS

VISUAL INSPECTIONS - FOLLOWING VESSEL SHUTDOWN IN MARCH, 1984, VISUAL INSPECTIONS MADE ON OUTSIDE BOTTOM HEAD AT ALL PENETRATIONS

- 2 PENETRATIONS WITH EVIDENCE OF LEAKAGE. ONE LEAKING SEVERAL DROPS PER MINUTE. ONE WITH DAMPNESS.
- 7 SUSPECTED OF PRIOR LEAKAGE

BASED ON OUTSIDE INSPECTIONS, 12 HOUSINGS INSPECTED INSIDE WITH TV. CRACKS FOUND IN 6 STUB TUBES.

ULTRASONIC INSPECTIONS - INSPECTED FROM ID OF HOUSING TO INSURE INTEGRITY OF HOUSING AND J-WELD. INSPECTED ALL HOUSINGS THAT WERE ROLLED (PRIOR TO AND AFTER ROLLING). NO INDICATIONS FOUND.

2. ROLL REPAIRS

DURING OUTAGE - ROLLED 9 PENETRATIONS:

- 2 SHOWING EVIDENCE OF LEAKAGE
- 7 SUSPECTED OF PRIOR LEAKAGE

POST OUTAGE REPAIR - A TENTH HOUSING WAS ROLLED AFTER INITIAL COLD HYDROSTATIC TEST REVEALED LEAKAGE AT 6 DPM

INSPECTION RESULTS FROM SPRING 1984 OUTAGE

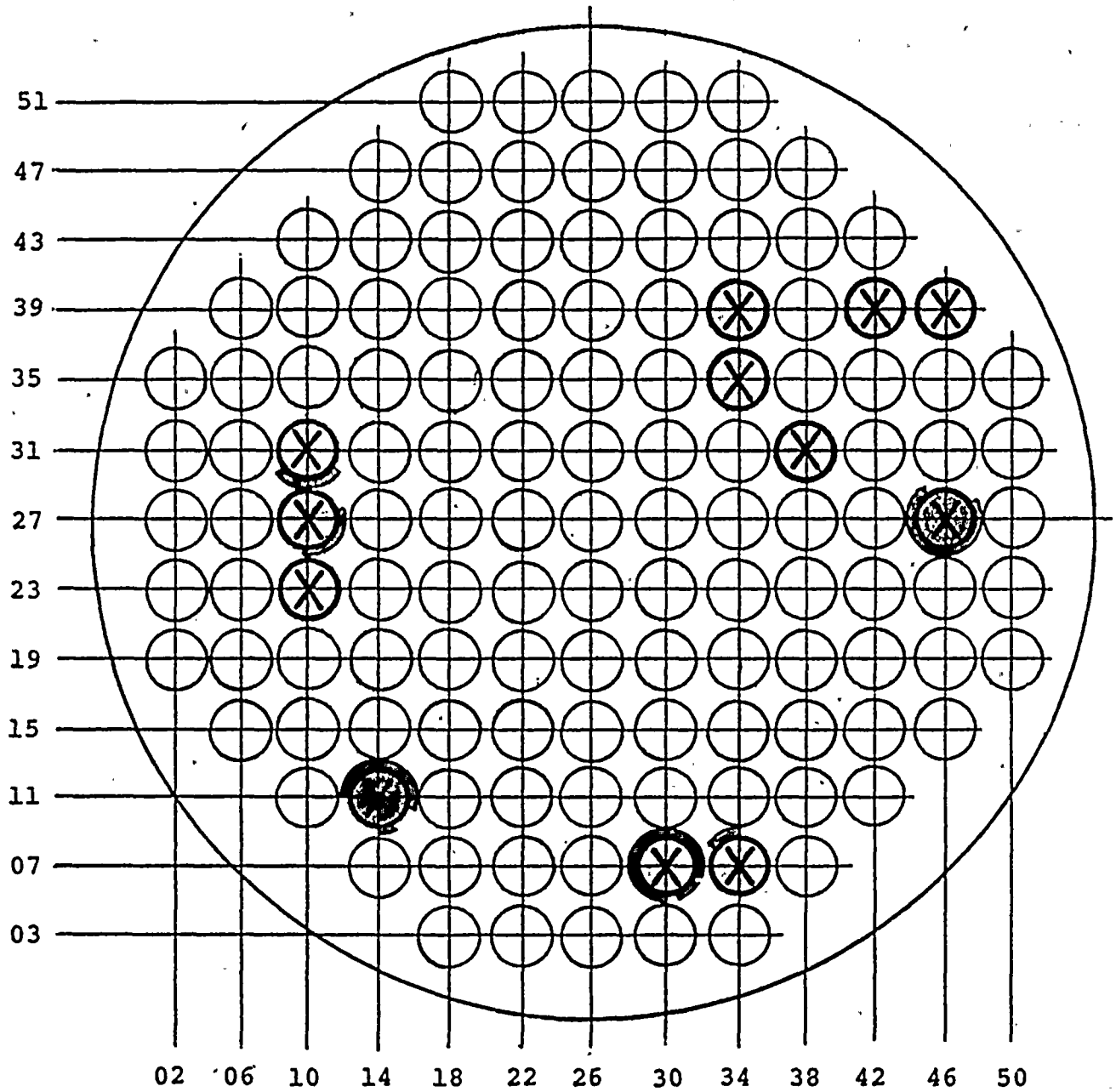

Legend:

- Inspected By CCTV
- Possible Evidence Of Prior Leak
- Visible Leak
- Crack Visible By CCTV

C. CONTINGENCY PLANS AND INVESTIGATIONS TO PREPARE FOR SPRING 1986 OUTAGE

1. DEVELOPMENT OF ROLL REPAIR IMPROVEMENTS

   - PROCUREMENT OF IMPROVED ROLLING EQUIPMENT, MOCK-UPS

   - MOCK-UP TESTS OF METHODS FOR ROLLING ABOVE AND BELOW PREVIOUSLY ROLLED HOUSINGS

   - JUSTIFICATION FOR SECURING COOLING

   - ADDITIONAL VERIFICATION OF ACCEPTABILITY OF ROLLING PROCESS -- EPRI METALLURGICAL/$MGCL_2$ TESTS

2. DEVELOPMENT OF IN-SERVICE INSPECTION PROGRAM FOR CONTROL ROD DRIVE PENETRATIONS.
   (SUBMITTED TO NRC 10/01/84)

3. DEVELOPMENT OF GUIDELINES FOR REPAIR OF LEAKING CRD PENETRATIONS.
   (PRESENTED TO NRC 11/18/85)

ROLL REPAIR IMPROVEMENTS

ADDITIONAL MOCK-UP TESTS

- ROLLING TEST ABOVE AND BELOW ORIGINAL ROLL - CONSISTED OF ROLLING TWO ADDITIONAL EXPANSION ROLLS ON A PREVIOUSLY ROLLED HOUSING. THE PURPOSE OF THIS TEST WAS TO QUALIFY ROLLING PROCEDURES/PERSONNEL/TOOLING FOR REPAIR OF PREVIOUSLY ROLLED HOUSINGS FOUND TO BE LEAKING.

ADDITIONAL ROLLING TESTS PERFORMED ON FULL SCALE MOCK-UPS.

CONCLUDED ROLLING ABOVE AND BELOW IS EFFECTIVE AND INTRODUCES NO HARMFUL EFFECTS.

PROCEDURES WERE DEVELOPED FOR SPRING 1986 OUTAGE.

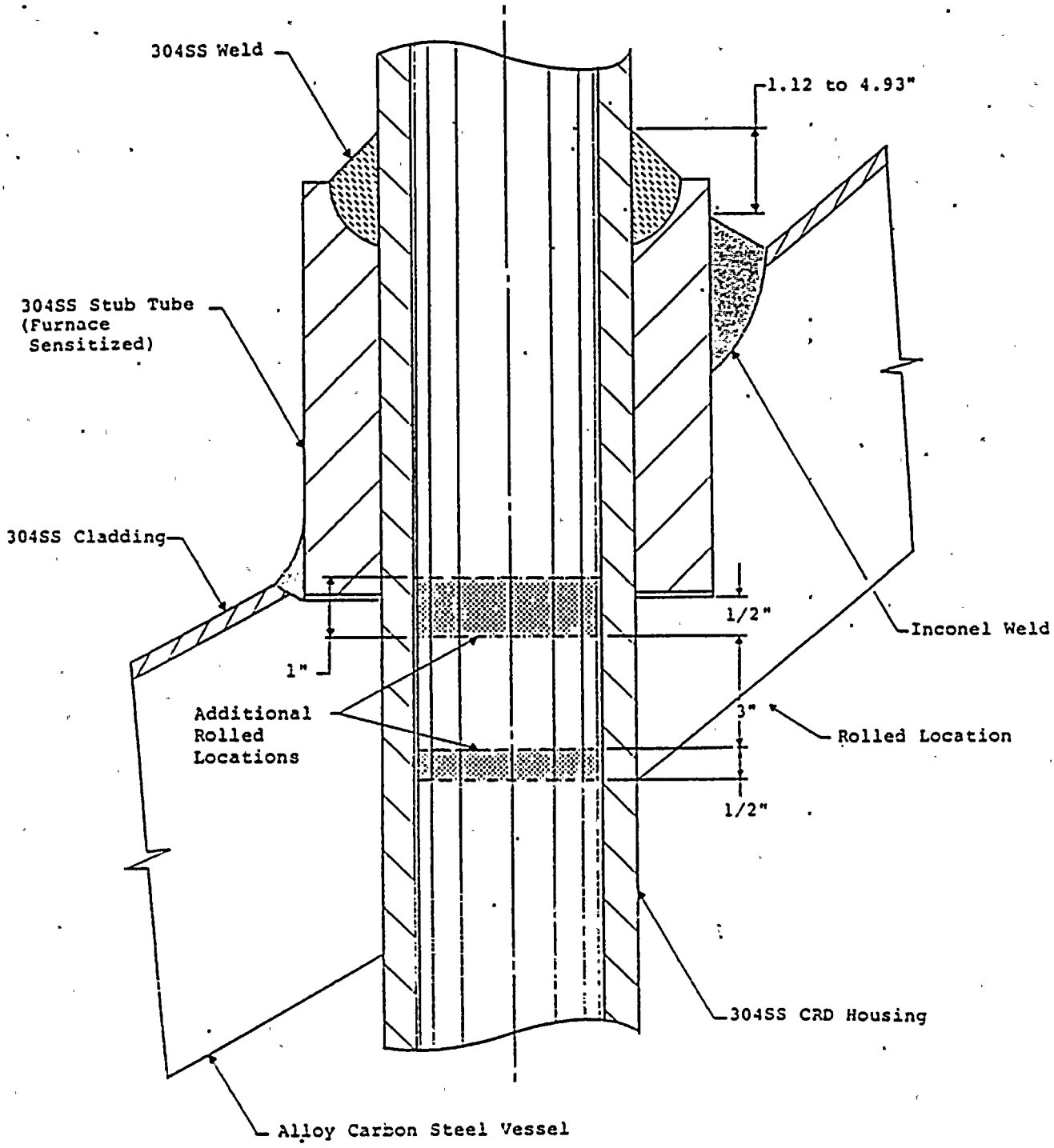

NMP-1
CRD HOUSING
ADDITIONAL ROLLED AREA

EVALUATIONS TO DETERMINE EFFECTS OF SECURING COOLING FLOW TO DRIVES

HOUSING/VESSEL MINIMUM CONTACT PRESSURE FROM ROLLING (FOR NORMAL OPERATING CONDITION) IS:

- WITH COOLING FLOW TO CRD HOUSING:
  - PRESSURE IS 4200 PSIA
- WITH NO COOLING FLOW:
  - PRESSURE IS 7400 PSIA

SAFETY EVALUATION BY GE CONFIRMS ACCEPTABILITY OF SECURING COOLING FLOW TO DRIVES. MINIMAL EFFECT ON:

- LIFETIME OF NON-METALLICS (MAINTENANCE SCHEDULE IS INCREASED TO EVERY RE-FUEL CYCLE)
- TECH SPEC LIMITS (SCRAM TIME)

CURRENTLY PREPARING NECESSARY PLANT-SPECIFIC SAFETY EVALUATIONS AND PROCEDURES TO ALLOW SECURING OF COOLING TO SPECIFIC DRIVES

VERIFICATION OF ACCEPTABILITY OF ROLLING PROCESS

- EVALUATIONS WERE COMPLETED PRIOR TO SPRING 1984 OUTAGE TO DETERMINE COLD WORK EFFECTS ON IGSCC RESISTANCE

- IGSCC RESISTANCE WAS FOUND TO BE UNAFFECTED BASED ON SERVICE EXPERIENCE AND CORRELATIONS USING HARDNESS LEVELS

- CONFIRMATORY INVESTIGATIONS WERE STARTED AT EPRI-CHARLOTTE TO STUDY:

  - LOCATION OF STRAIN-INDUCED MARTENSITE (MARTENSITE CAN SENSITIZE AT REACTOR TEMPERATURE)

  - RESIDUAL STRESSES

- TESTS WERE COMPLETED PRIOR TO SPRING 1986 OUTAGE AND SHOWED:

  - MARTENSITE IS PRESENT BUT ONLY IN ROLLED REGIONS OF HOUSING I.D.

  - NET STRESSES IN ROLLED REGION ARE COMPRESSIVE AND ARREST ANY CRACKING

  - ROLLING DOES NOT AFFECT IGSCC RESISTANCE OF ROLLED HOUSING

INSPECTION PLAN FOR CRD PENETRATIONS

- INSERVICE INSPECTION PROGRAM FOR CRD PENETRATIONS SUBMITTED TO NRC ON 10/01/84
  - VISUAL INSPECTION FOR LEAKAGE DURING HYDROSTATIC TESTS AT REFUEL OUTAGES
  - UT AT LEAST TWO PREVIOUSLY ROLLED HOUSINGS
  - CLOSE CIRCUIT TV INSPECTION OF STUB TUBE CRACKING IF CELL IS DISASSEMBLED

GUIDELINES FOR REPAIR OF LEAKING PENETRATIONS

- GUIDELINES FOR IMPLEMENTING REPAIR STEPS FOR LEAKING CRD PENETRATIONS WERE DEVELOPED FOR THE SPRING 1986 OUTAGE AS FOLLOWS:

REPAIR	LEAKAGE LIMIT FOR IMPLEMENTING REPAIR STEPS (NOTE)*
ROLL REPAIR	CLEAR EVIDENCE OF LEAKAGE
ADDITIONAL ROLLS OF PREVIOUSLY ROLLED HOUSING	LEAKAGE RATE ≥ 15 DROP/MIN AT HYDRO PRESSURE
CONTINGENCY REPAIRS FOR ROLLED HOUSING	LEAKAGE RATE ≥ 0.1 GPM AT HYDRO PRESSURE

- GUIDELINES PRESENTED TO THE NRC FOR REVIEW AND SUBMITTED TO NRC FOR APPROVAL

NOTE*: INSPECTIONS AND REPAIRS TO BE PERFORMED AT HYDROSTATIC TEST DURING REFUEL OUTAGES

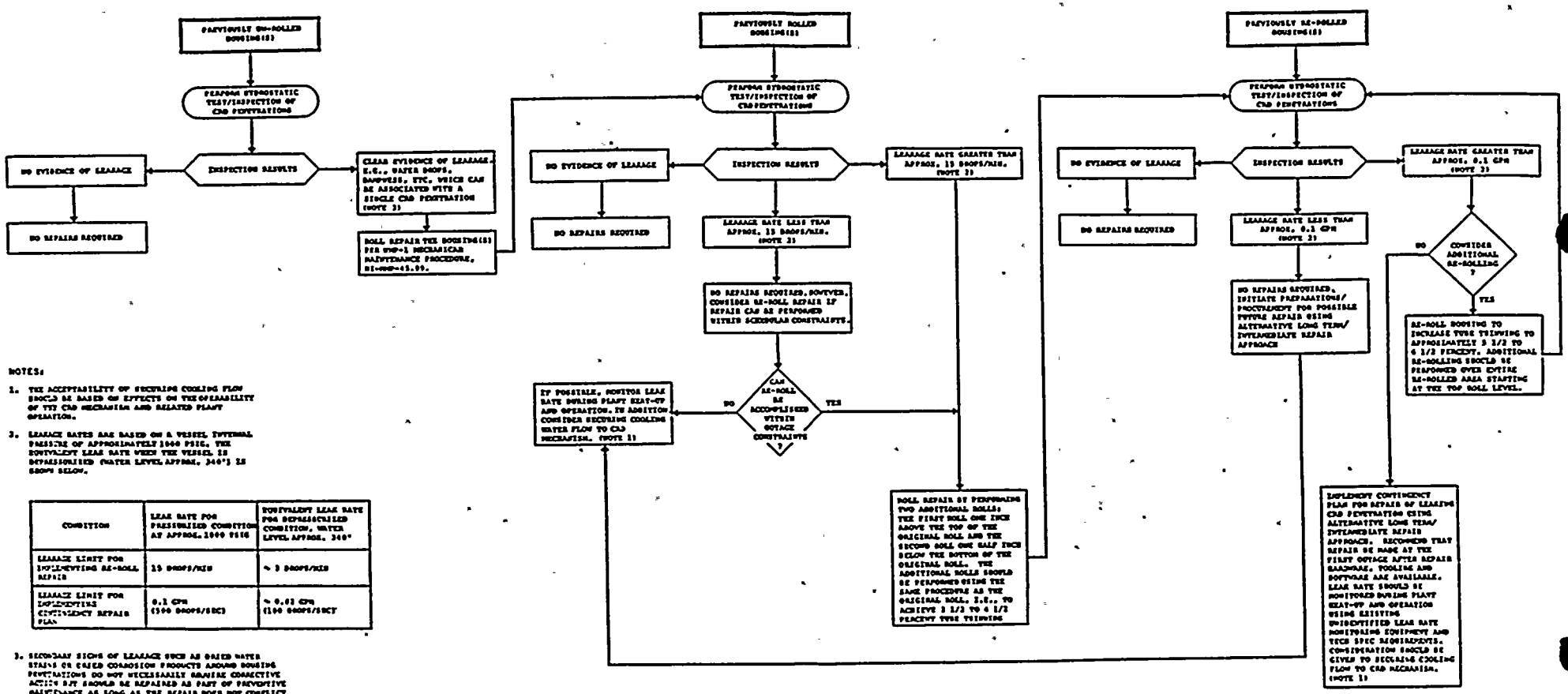

NOTES:

1. THE ACCEPTABILITY OF SECURING COOLING FLOW SHOULD BE BASED ON EFFECTS ON THE OPERABILITY OF THE CRD MECHANISM AND RELATED PLANT OPERATION.

2. LEAKAGE RATES ARE BASED ON A VESSEL INTERNAL PRESSURE OF APPROXIMATELY 1040 PSIG. THE EQUIVALENT LEAK RATE WHEN THE VESSEL IS DEPRESSURIZED (WATER LEVEL APPROX. 340") IS SHOWN BELOW.

CONDITION	LEAK RATE FOR PRESSURIZED CONDITION AT APPROX. 1040 PSIG	EQUIVALENT LEAK RATE FOR DEPRESSURIZED CONDITION, WATER LEVEL APPROX. 340"
LEAKAGE LIMIT FOR IMPLEMENTING RE-ROLL REPAIR	15 DROPS/MIN	~ 3 DROPS/MIN
LEAKAGE LIMIT FOR IMPLEMENTING CONTINGENCY REPAIR PLAN	0.1 GPM (100 DROPS/SEC)	~ 0.02 GPM (100 DROPS/SEC)

3. SECONDARY SIGNS OF LEAKAGE SUCH AS DRIED WATER STAINS OR CAUSED CORROSION PRODUCTS AROUND HOUSING PENETRATIONS DO NOT NECESSARILY REQUIRE CORRECTIVE ACTION BUT SHOULD BE REPAIRED AS PART OF PREVENTIVE MAINTENANCE AS LONG AS THE REPAIR DOES NOT CONFLICT WITH OUTAGE CONSTRAINTS.

TABLE I

NMP-1
GUIDELINES FOR REPAIR OF LEAKING CONTROL ROD DRIVE (CRD) PENETRATIONS

DEVELOPMENT OF ROLL REPAIR FOR SPRING 1984 OUTAGE

- ROLLING PROCEDURES AND EQUIPMENT WERE QUALIFIED AND PERSONNEL WERE TRAINED ON 10 FULL SCALE MOCK-UP ASSEMBLIES.
- LEAK TESTS WERE PERFORMED ON MOCK-UPS BEFORE AND AFTER SIMULATED REACTOR HEAT-UP AND COOL-DOWN CYCLE.
- DIMENSIONAL, VISUAL, AND HARDNESS TESTS WERE MADE WHICH CONFIRMED THE ACCEPTABILITY OF THE REPAIR

CRITERIA FOR INSERVICE LEAKAGE

- NMPC WILL MONITOR ANY INSERVICE CRD PENETRATION LEAKAGE BY MEANS OF THE EXISTING DRYWELL UNIDENTIFIED LEAKAGE MONITORING SYSTEM.

- NMPC WILL INSPECT FOR CRD PENETRATION LEAKAGE DURING NON-REFUEL OUTAGES WHERE ACCESS TO THE DRYWELL IS AVAILABLE AND WILL EVALUATE RESULTS ON A CASE BASIS. MEASURED CRD PENETRATION LEAKAGE UP TO 0.1 GPM PER PENETRATION, OR 1 GPM TOTAL, AT 900 - 1000 PSI WILL BE CONSIDERED ACCEPTABLE FOR CONTINUED OPERATION.

D. INSPECTIONS AND REPAIRS TO CRD PENETRATIONS DURING SPRING 1986 OUTAGE

1. INSPECTIONS

VISUAL INSPECTIONS -	FOLLOWING PLANT SHUTDOWN IN MARCH, 1986, VISUALLY INSPECTED OUTSIDE BOTTOM HEAD AT ALL CRD PENETRATIONS. FOUND TWO HOUSINGS LEAKING SEVERAL DROPS PER MINUTE. ONE HOUSING HAD NOT BEEN PREVIOUSLY ROLLED, ONE HOUSING HAD BEEN PREVIOUSLY ROLLED.
ULTRASONIC INSPECTIONS -	INSPECTED 4 HOUSINGS DURING '86 OUTAGE TO ENSURE INTEGRITY. INSPECTED ONE HOUSING ROLLED IN '84 OUTAGE. INSPECTED 2 HOUSINGS PRIOR TO AND AFTER RE-ROLLING. INSPECTED ONE HOUSING PRIOR TO AND AFTER ROLLING.

2. REPAIRS

ROLL REPAIRS DURING OUTAGE -	BASED ON VISUAL INSPECTIONS UNDER VESSEL HEAD, ROLLED 1 HOUSING AND RE-ROLLED 1 HOUSING.
POST-OUTAGE REPAIR -	A SECOND HOUSING WAS RE-ROLLED AFTER INITIAL COLD HYDROSTATIC TEST REVEALED LEAKAGE AT 4 TO 6 DPM.
ADDITIONAL LEAKS -	DURING RECENT PLANT RE-START (SHUTDOWN FOR EQUIPMENT REPAIRS), PENETRATION 46-27, ORIGINALLY ROLLED IN '84 WAS FOUND TO BE LEAKING AT 4 TO 6 DPM. PLANT IN STARTUP MODE. NO REPAIRS MADE.

E. RECENT REPAIR/CURRENT STATUS

1. DURING RECENT MAINTENANCE OUTAGE DURING THE WEEK OF AUGUST 8, 1986, NMPC FOUND EVIDENCE OF A LEAKING PENETRATION, NO. 34-19, LEAKING AT ABOUT 120 DPM AS ESTIMATED FROM CRD FLANGE.*

2. PENETRATION NO. 34-19 SUCCESSFULLY ROLL REPAIRED. (4 1/2" ROLL BAND)

3. NO LEAKAGE FROM NO. 34-19 FOLLOWING INSPECTION DURING IN-SERVICE START-UP.

4. PENETRATION NO. 46-27 NOTED TO STILL BE LEAKING ABOUT 4 TO 6 DPM DURING IN-SERVICE INSPECTION. (LEAKAGE LESS THAN 15 DPM PER GUIDELINES)

*INSPECTIONS OF PENETRATION NO. 46-27 SHOWED NO LEAKAGE AT THIS TIME.

ROLL REPAIR SUMMARY

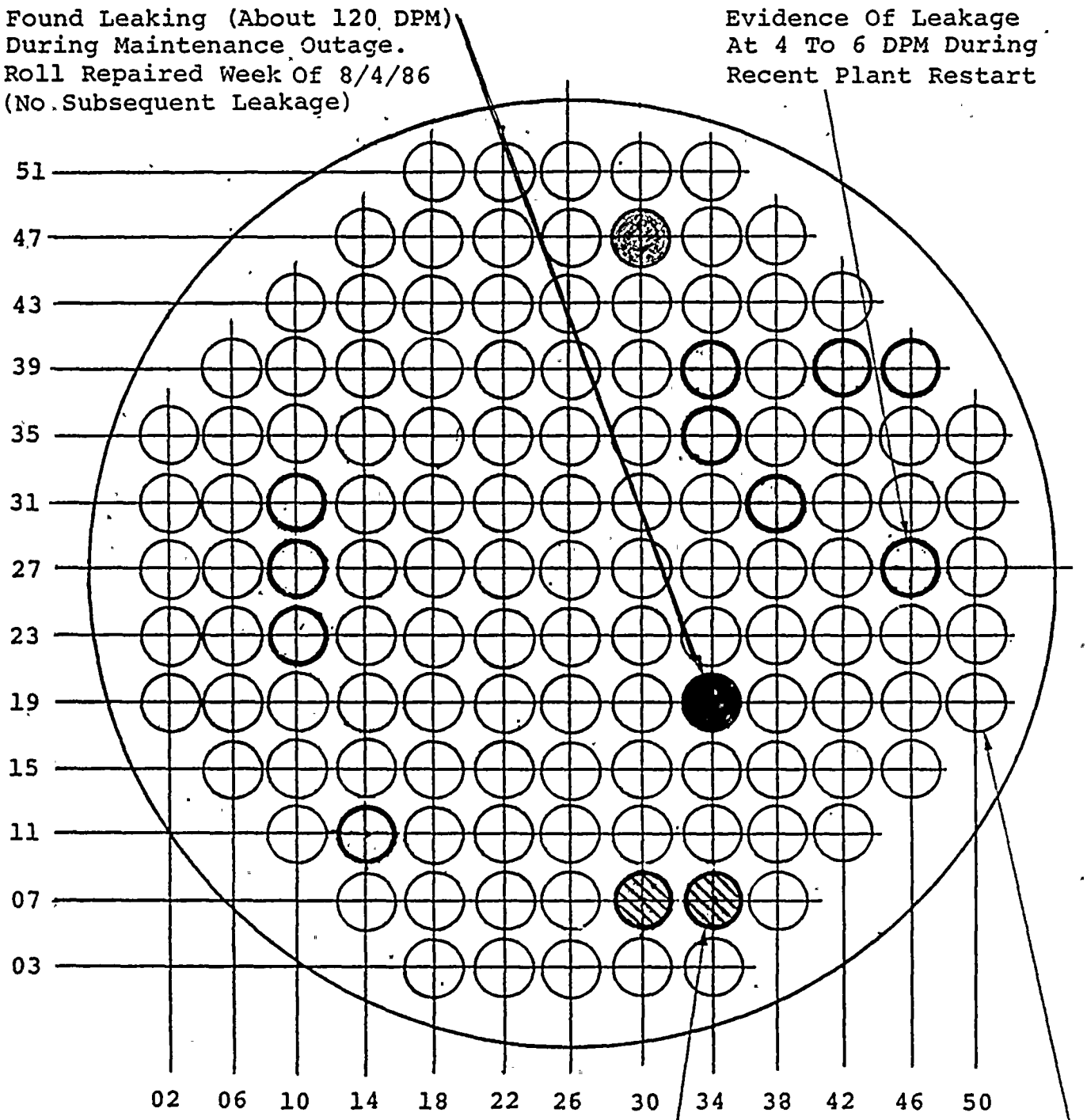

Legend:

- Visually Inspected In 1984 From Inside Vessel
- Roll Repaired 10 Housings In 1984
- Roll Repaired 1 Housing In 1986
- Rolled Two Additional Rolls On 2 Housings In 1986

Rolled After Post Repair Hydrostatic Test In 1984

Rolled Two Additional Rolls After Post Repair Hydrostatic Test In 1986

F. CODE COMPLIANCE AND LICENSING BASIS FOR REPAIR APPROACH

1. ASME CODE COMPLIANCE

- STUB TUBE PENETRATIONS ARE ATTACHED WITH NON-FULL PENETRATION WELDS DESIGNED TO:

  - HOLD CRD HOUSINGS FROM EJECTION

  - PROVIDE A PRESSURE BOUNDARY SEAL

  THE STUB TUBE-TO-VESSEL WELD, HOUSING-TO-STUB TUBE WELD, AND STUB TUBE ARE NOT PART OF VESSEL REINFORCEMENT AREA. ALL REINFORCEMENT IS INTEGRAL WITH VESSEL WALL.

- REPAIR TO CRD PENETRATIONS BY ROLLING BASED ON REQUIREMENTS OF SECTION XI, PARAGRAPH IWB-3142.4.

  "COMPONENTS CONTAINING RELEVANT CONDITIONS SHALL BE ACCEPTABLE FOR CONTINUED SERVICE IF AN ANALYTICAL EVALUATION DEMONSTRATES THE COMPONENTS ACCEPTABILITY." . . .

- EVALUATIONS COMPLETED (AS DISCUSSED ABOVE) WHICH INCLUDE:

  - SAFETY EVALUATIONS
  - MOCK-UP TESTS
  - REVIEWS OF IN-SERVICE EVALUATIONS AT OTHER BWRs
  - ANALYTICAL EVALUATIONS

  CONCLUDED REPAIR STATUS WAS ACCEPTABLE

- IN ACCORDANCE WITH CODE REQUIREMENTS, ACCEPTANCE CRITERIA DEVELOPED IN FORM OF LEAKAGE LIMITS. PROPOSE USE OF THESE LIMITS FOR REPAIR BASIS DURING RE-FUEL OUTAGES

- NRC SAFETY EVALUATIONS COMPLETED FOR NMP-1 (SER DOCKET 50-220, DATED 06/29/84) AND OTHER BWRs CONCURRED IN ACCEPTABILITY OF ROLL REPAIR METHOD

- IWB-3144 REQUIRES EVALUATION ANALYSIS AND RE-EXAMINATION RESULTS BE SUBMITTED TO THE REGULATORY AUTHORITY

2. LICENSING BASIS

- THE WELDED PENETRATION WITH A ROLLED JOINT MAINTAINS (OR IMPROVES) THE ORIGINAL STRUCTURAL INTEGRITY OF THE VESSEL PENETRATIONS.

- THE REPAIR PROCESS CHANGES THE PRIMARY SEAL FROM A WELDED TO A MECHANICAL SEAL. LIMITED LEAKAGE IS NOT ABNORMAL FOR THIS TYPE SEAL.

- CONCLUDE THAT LICENSING BASIS REMAINS AS SPECIFIED IN GDC 14,

  > ". . . TO HAVE AN EXTREMELY LOW PROBABILITY OF ABNORMAL LEAKAGE, OF RAPIDLY PROPOGATING FAILURE, AND OF GROSS RUPTURE."

- HAS BEEN APPROVED BY NRC PREVIOUSLY FOR NMP-1, BIG ROCK POINT, AND OTHERS.

- ANY LEAKAGE DURING OPERATION WILL BE GOVERNED BY TECH SPEC UNIDENTIFIED LEAKAGE LIMITS

- TOTAL LEAKAGE DURING HYDRO TESTS WILL BE LIMITED TO 1.0 GPM FROM ALL PENETRATIONS

III. BACK-UP MECHANICAL SEAL DEVELOPMENT PROGRAM

A. PURPOSE

- MAINTAIN LEAKAGE LIMITS DUE TO
  - POSSIBLE RELAXATION OF ROLLED JOINTS
  - POOR ROLLED JOINT INITIAL SEAL (POOR SURFACE CONDITIONS, STEAM CUTTING)

B. CE SEAL DEVELOPMENT

- FABRICATE PROTOTYPE SEAL FOR DESIGN PRESSURE TESTS
- TEST SCHEDULED FOR EARLY 1987

C. MPR MECHANICAL SEAL DEVELOPMENT

- SEAL DESIGN
- PROTOTYPE FABRICATION
- SEAL TESTING
- DEVELOPMENT OF REMOTE MACHINING CAPABILITY
- DESIGN AND FABRICATION OF PROTOTYPE INSTALLATION TOOLING
- CONTINGENCY PLANNING FOR IMPLEMENTATION PHASE

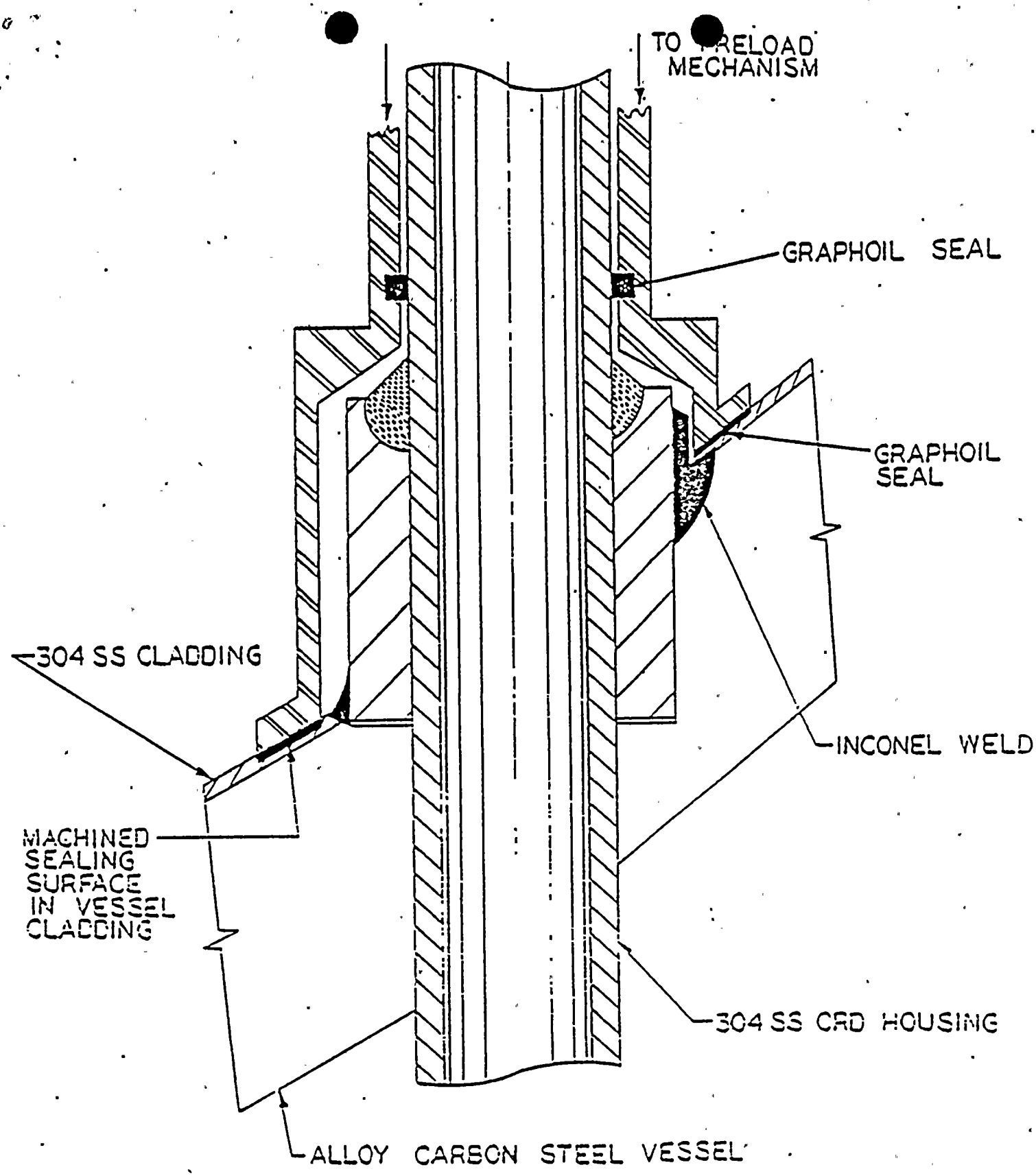

COMBUSTION ENGINEERING BOTTOM HEAD SEAL CONCEPTUAL DESIGN

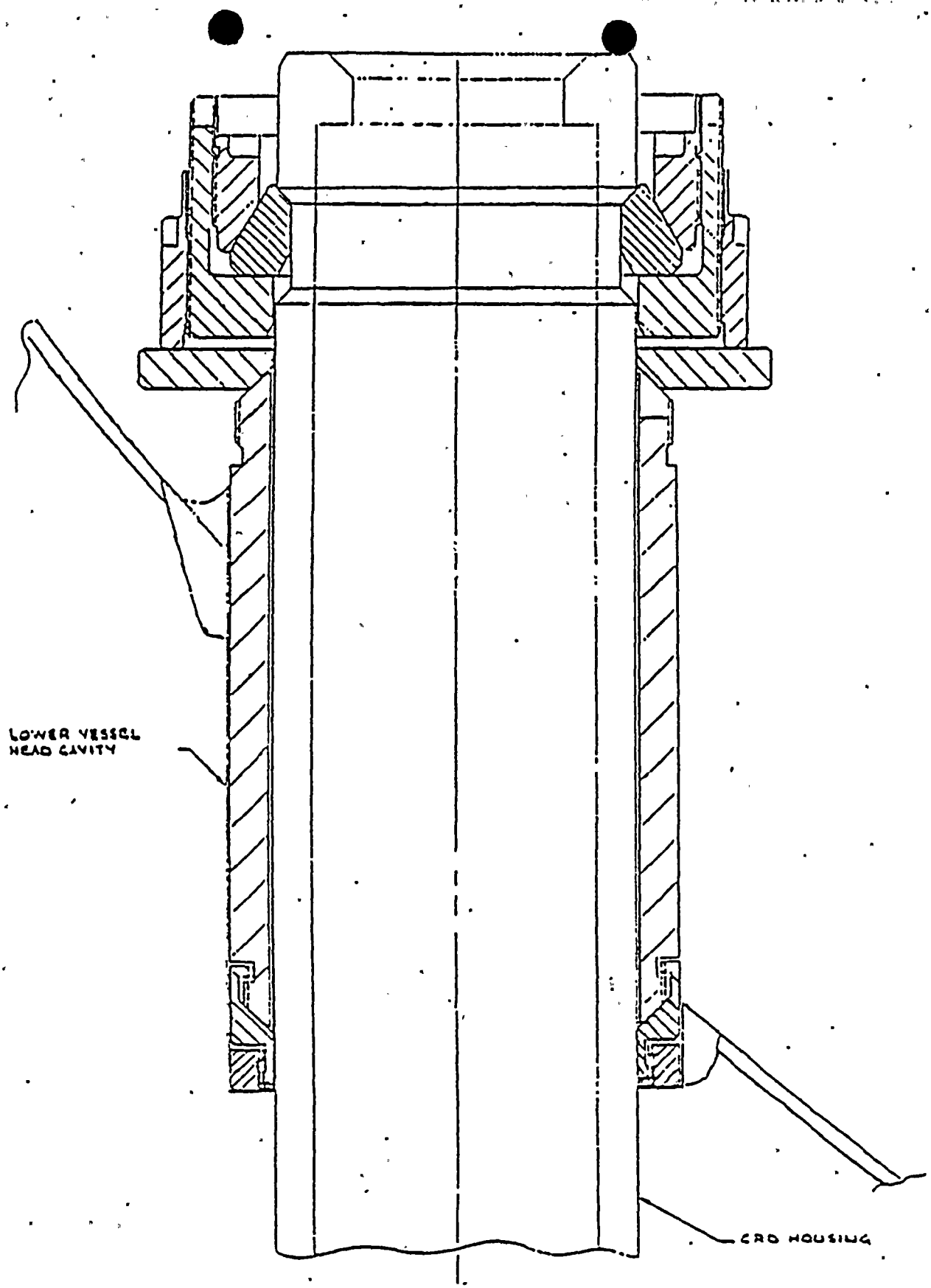

NMP-1
PROTOTYPE MECHANICAL SEAL ASSEMBLY

FEATURES OF MPR MECHANICAL SEAL

- CONVENTIONAL PACKING SEAL, AXISYMMETRIC GEOMETRY, GOOD SEAL SURFACES, PRESSURE SEATED--HIGH CONFIDENCE OF SUCCESS
- PROVIDES POSITIVE RETENTION OF CRD HOUSING, IN ADDITION TO ROLLED JOINT
- REMOTELY INSTALLABLE WITHOUT WELDING AND WITHOUT DRAINING VESSEL
- DOES NOT AFFECT VESSEL PRESSURE RATING
- COMPLIES WITH ASME CODE, SECTION XI
- IS REMOVABLE FOR SEAL REPLACEMENT, IF EVER REQUIRED

D. CODE AND LICENSING BASES FOR MECHANICAL SEAL

COMPLIANCE WITH ASME SECTION III PROVIDED BASED ON FOLLOWING:

1. MECHANICAL SEAL WOULD PROVIDE DESIGN FUNCTIONS OF THE WELDED AND ROLLED EXPANSION PENETRATION

   - PROVIDE POSITIVE RETENTION OF HOUSING AGAINST EJECTION

   - PROVIDE A PRESSURE BOUNDARY SEAL TO LIMIT LEAKAGE

2. THE SEAL WOULD NOT BE CONSIDERED AS VESSEL REINFORCEMENT MATERIAL

3. THE MECHANICAL SEAL WOULD BE CLASSIFIED AND DESIGNED AS A SPECIAL PIPING JOINT IN ACCORDANCE WITH ASME CODE, SECTION III, SUB-SECTION NB-3671.7

   "MECHANICAL JOINTS, FOR WHICH NO STANDARDS EXIST, AND OTHER PATENTED JOINTS MAY BE USED PROVIDED THE REQUIREMENTS OF A, B, AND C BELOW ARE MET"

   - PROVISION IS MADE TO PREVENT SEPARATION OF THE JOINT UNDER ALL SERVICE LOADINGS

   - THEY ARE ACCESSIBLE FOR MAINTENANCE, REMOVAL, AND REPLACEMENT AFTER SERVICE

- EITHER OF THE FOLLOWING TWO CRITERIA ARE MET:

  1.) A PROTOTYPE JOINT HAS BEEN SUBJECTED TO PERFORMANCE TESTS...

  2.) JOINTS ARE DESIGNED IN ACCORDANCE WITH THE RULES OF NB-3200

THE ALTERNATIVE MECHANICAL SEAL ASSEMBLY BEING CONSIDERED FOR NMP-1 MEETS THESE REQUIREMENTS

E. STATUS OF MPR BACK-UP SEAL DEVELOPMENT

1. PROTOTYPE SEAL HAS BEEN DESIGNED, FABRICATED, AND TESTED.

   FABRICATED ITEMS:

   - PROTOTYPE SEAL
   - SEAL TEST FIXTURE FOR PRESSURE TESTS

2. TESTS ON SEAL INCLUDE:

   - o AMBIENT TEMPERATURE TESTS AT PRESSURES UP TO 1500 PSI
   - o AMBIENT TEMPERATURE TESTS WITH PRESSURE CYCLES BETWEEN 1000 AND 100 PSI.

   NO LEAKAGE FROM SEAL WAS OBSERVED DURING TESTING PERIODS UP TO 30 MINUTES.

3. CRD/STUB TUBE MACHINING-FEASIBILITY DEMONSTRATION WORK STARTED.

   - o MECHANICAL MACHINING--PCI
   - o EDM--PROPOSALS BEING EVALUATED

4. INSTALLATION TOOLING BEING DESIGNED

ESTIMATED TIME FOR COMPLETION OF SEAL AND TOOLING FEASIBILITY STUDY--8-10 MONTHS

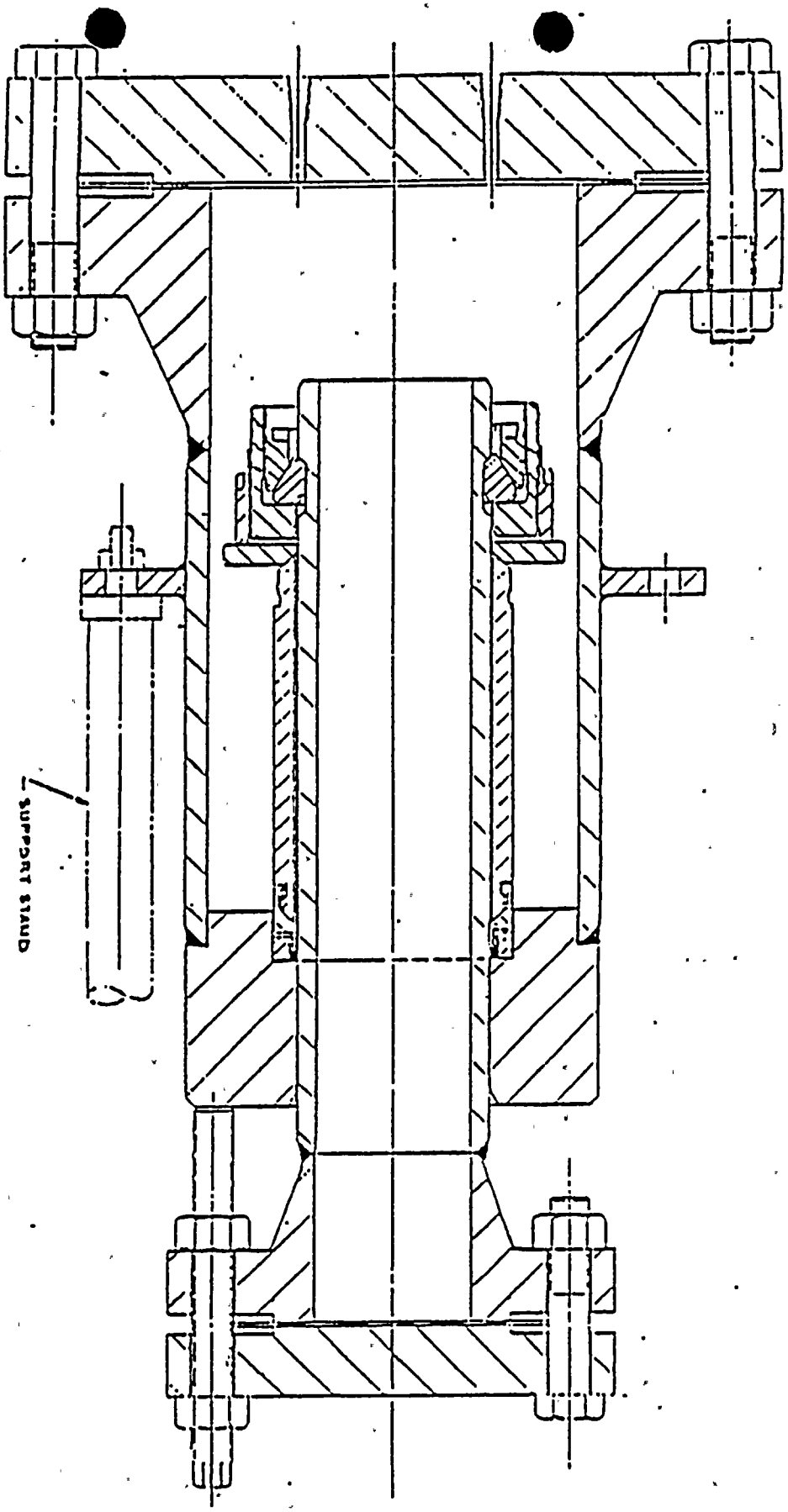

NMP-1
PROTOTYPE MECHANICAL SEAL ASSEMBLY
TEST FIXTURE

IV. FUTURE PLANS FOR CRD REPAIR PROGRAM

1. CONTINUE TO IMPLEMENT GUIDELINES FOR REPAIR OF LEAKING PENETRATIONS.

2. CONTINUING WITH PROCEDURES/EVALUATIONS TO SECURE CRD HOUSING COOLING FLOW IF REQUIRED TO REDUCE LEAKAGE. CURRENT INTEREST TO SECURE COOLING TO 46-27.

3. CONTINUING WITH WORK TO CONFIRM OPTIMIZATION OF ROLLING PROCEDURES

   - PULL TESTS OF CRD HOUSING MOCK-UPS

   - ELASTIC/PLASTIC MODELING EVALUATIONS

4. CONTINUING WITH DEVELOPMENT OF BACK-UP SEAL

   - STUB TUBE/HOUSING MACHINING

     - MECHANICAL CUTTING

     - EDM

   - SEAL TESTING

   - HANDLING TOOL DEVELOPMENT

5. CONTINGENCY PLANS UNDER DEVELOPMENT FOR IMPLEMENTATION OF BACK-UP SEAL

   - FABRICATION OF PRODUCTION, FULL HEIGHT MACHINING AND INSTALLATION TOOLS

   - QUALIFICATION OF PROCEDURES AND EQUIPMENT

- TRAINING
- SITE SUPPORT
- LICENSING SUPPORT

ESTIMATED TIME TO PREPARE FOR SEAL INSTALLATION AFTER DECISION TO IMPLEMENT BACK-UP PLAN--24-30 MONTHS

Distribution for Meeting Summary Dated: October 7, 1986

Facility: Nine Mile Point Nuclear Station*, Unit No. 1

Docket File (50-220)
NRC PDR
Local PDR
BWD1 Reading
R. Bernero/R. Houston
J. Zwolinski
J. Kelly
C. Jamerson
OGC-BETH (Info only)
E. Jordan
B. Grimes
ACRS (10)
D. Vassallo
G. Lainas/B. D. Liaw
R. Hermann
G. Thomas
H. Conrad
H. Shaw
W. Hazelton
Y-Li Li
P. Cortland
Nine Mile file

* Copies sent to persons on facility service list