REGULATORY INFORMATION DISTRIBUTION SYSTEM (RIDS)

ACCESSION NBR: 8608260306 DOC. DATE: 86/08/21 NOTARIZED: YES DOCKET #
FACIL: 50-410 Nine Mile Point Nuclear Station, Unit 2, Niagara Moha 05000410
AUTH. NAME AUTHOR AFFILIATION
MANGAN, C. V. Niagara Mohawk Power Corp.
RECIP. NAME RECIPIENT AFFILIATION
ADENSAM, E. G. BWR Project Directorate 3

SUBJECT: Describes approach which will be adopted on interim basis for severe accident conditions, per 860609 commitment to develop increasing understanding of how to cope w/ containment venting, pending results of 870731 analysis.

DISTRIBUTION CODE: B001D COPIES RECEIVED: LTR 1 ENCL 1 SIZE: 4
TITLE: Licensing Submittal: PSAR/FSAR Amdts & Related Correspondence

NOTES:

	RECIPIENT ID CODE/NAME		COPIES LTTR	COPIES ENCL	RECIPIENT ID CODE/NAME		COPIES LTTR	COPIES ENCL
	BWR EB		1	1	BWR EICSB		2	2
	BWR FOB		1	1	BWR PD3 LA		1	1
	BWR PD3 PD		1	1	HAUGHEY, M	01	2	2
	BWR PSB		1	1	BWR RSB		1	1
INTERNAL:	ACRS	41	6	6	ADM/LFMB		1	0
	ELD/HDS3		1	0	IE FILE		1	1
	IE/DEPER/EPB	36	1	1	IE/DQAVT/QAB	21	1	1
	NRR BWR ADTS		1	0	NRR PWR-B ADTS		1	0
	NRR ROE M L		1	1	NRR/DHFT/MTB		1	1
	REG FILE	04	1	1	RGN1		3	3
	RM/DDAMI/MIB		1	0				
EXTERNAL:	BNL(AMDTS ONLY)		1	1	DMB/DSS (AMDTS)		1	1
	LPDR	03	1	1	NRC PDR	02	1	1
	NSIC	05	1	1	PNL GRUEL, R		1	1

TOTAL NUMBER OF COPIES REQUIRED: LTTR 36 ENCL 31

NIAGARA MOHAWK

NIAGARA MOHAWK POWER CORPORATION/300 ERIE BOULEVARD WEST, SYRACUSE, N.Y. 13202/TELEPHONE (315) 474-1511

August
~~April~~ 21, 1986
(NMP2L 0831)

Ms. Elinor G. Adensam, Director
BWR Project Directorate No. 3
U.S. Nuclear Regulatory Commission
7920 Norfolk Avenue
Washington, DC 20555

Dear Ms. Adensam:

Re: Nine Mile Point Unit 2
Docket No. 50-410

In my letter of June 9, 1986 (NMP2L 0736) on the subject of containment venting, I stated that, pending the formal submittal of results of the analysis on July 31, 1987, we would develop an increasing understanding of how to cope with containment venting in the event of a severe accident (beyond design basis accident).

As a result of current interest in this subject and specific guidance from the staff, the following approach will be adopted on an interim basis for severe accident conditions:

1) Venting of the containment will not be initiated until the containment pressure reaches 45 psig (the containment design pressure);

2) Controlled venting will be from the suppression chamber, through the suppression chamber purge line to a bypass around one of the standby gas treatment system filtration units and then out to the environment through the main stack (as shown in attached figure);

3) The two inch containment purge line to the standby gas treatment system will be used first. In the event this line does not provide sufficient flow area for pressure reduction, the 20 inch line will be used. The bypass around the filtration units is a 14 inch line.

B001
1/1

In order to bypass a filtration unit, it will be necessary to insert blind flanges in the 20 inch lines outboard of the flexible bellows when it becomes apparent that the use of the bypass will be required. The use of the bypass around the standby gas treatment system filtration unit should prevent damage to any equipment during the venting process. All of the piping to be used in the venting process is rated for at least 150 psi service. The two identical, parallel, physically separated, 100 percent capacity air filtration assemblies will thus be available for long term service following the accident.

The above procedure is subject to change as the results of our analysis become known. We believe that our adoption of this interim procedure indicates the seriousness with which we treat this issue.

Very truly yours,

C. V. Mangan
Senior Vice President

RAC:ja
1836G

xc: W. A. Cook, NRC Resident Inspector
Project File (2)

UNITED STATES OF AMERICA
NULCEAR REGULATORY COMMISSION

In the Matter of Niagara Mohawk Power Corporation (Nine Mile Point Unit 2)	)))	Docket No. 50-410

AFFIDAVIT

C. V. Mangan, being duly sworn, states that he is Senior Vice President of Niagara Mohawk Power Corporation; that he is authorized on the part of said Corporation to sign and file with the Nuclear Regulatory Commission the documents attached hereto; and that all such documents are true and correct to the best of his knowledge, information and belief.

C V Mangan

Subscribed and sworn to before me, a Notary Public in and for the State of New York and County of Onondaga, this 22nd day of August, 1986.

Christine Austin
Notary Public in and for
Onondaga County, New York

My Commission expires:

CHRISTINE AUSTIN
Notary Public in the State of New York
Qualified in Onondaga Co. No. 4787687
My Commission Expires March 30, 1987

(1998G)

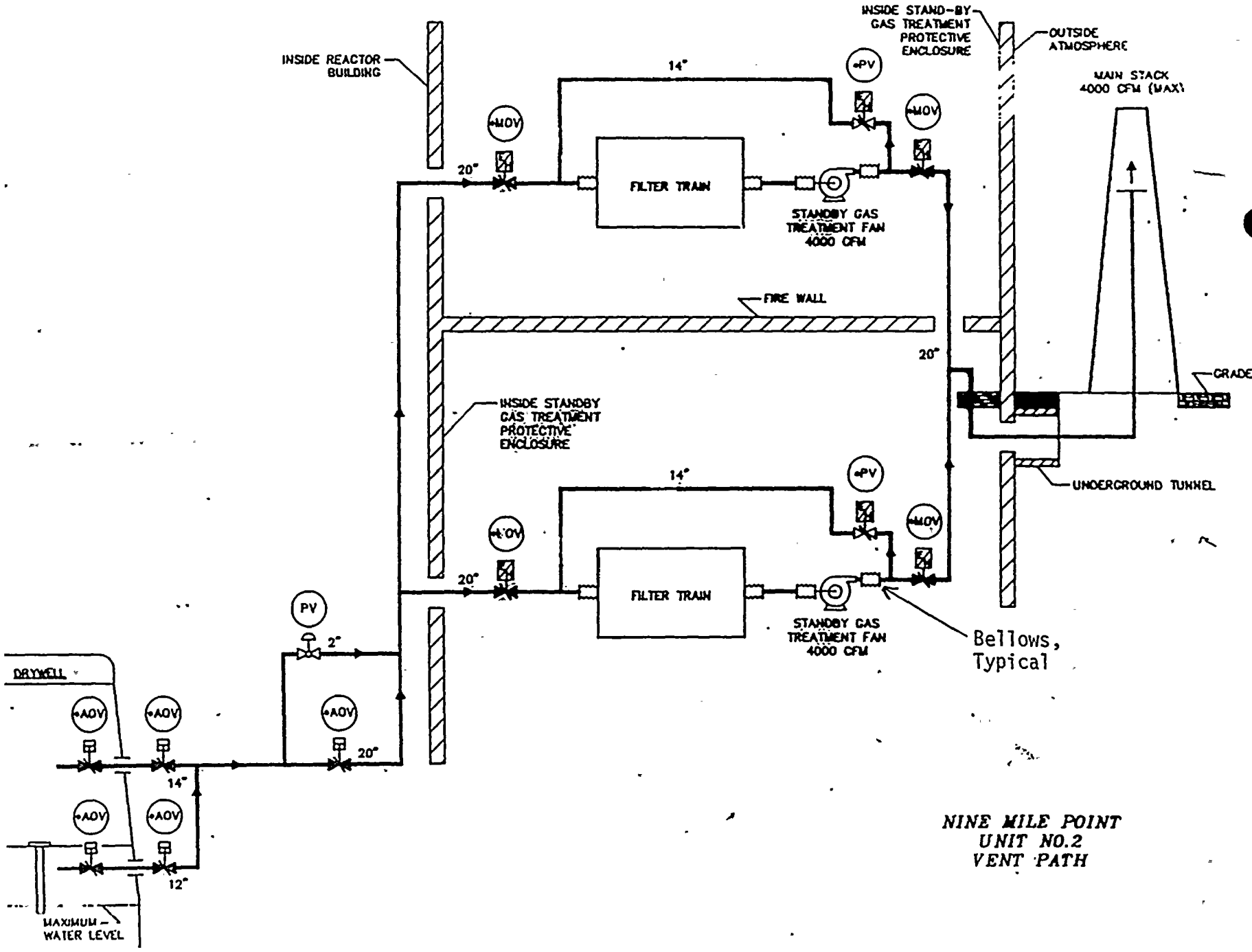

NINE MILE POINT
UNIT NO.2
VENT PATH