UNIVERSITY OF FLORIDA
TRAINING REACTOR FACILITY
LICENSE NO. R-56
DOCKET NO. 50-083

SUPPLEMENTAL INFORMATION TO SUPPORT LICENSE RENEWAL APPLICATION
NOVEMBER 30, 2016

REDACTED VERSION*

SECURITY-RELATED INFORMATION REMOVED

*REDACTED TEXT AND FIGURES BLACKED OUR OR DENOTED BY BRACKETS

UF | UNIVERSITY of FLORIDA

College of Engineering
UF Training Reactor Facility

PO Box 116134
Gainesville, FL 32611
352-392-2104
bshea@ufl.edu

November 30, 2016

U.S. Nuclear Regulatory Commission
ATTN: Document Control Desk
Washington, D.C. 20555-0001

10 CFR 50.4, Written Communications
UFTR Operating License R-56, Docket 50-83

Subject: **UFTR Supplemental Submittal for License Renewal (TAC NO. ME1586)**

Attached are the revised SAR and ALARA Plan to supplement the letter dated October 31, 2016 (ML16305A354). By phone call on November 9, 2016, the NRC requested further additional information. Based on that discussion, revised Technical Specifications and copies of the COMPLY and MicroShield computer code outputs are attached and the following additional statement is provided:

Dose calculations in SAR Chapter 13 assume a source term based on 30-days of continuous full-power operation (72,000 kW-hrs in 30 days) followed by a three-day decay period. These are very conservative assumptions in part due to ALARA concerns which ensure a decay period significantly longer than the 3-day minimum and due to actual UFTR energy generation having never exceeded 48,835 kW-hrs in a year. The staff expressed concern however that not all radionuclide inventories would reach equilibrium within 30-days and requested an additional ORIGEN calculation for one-year of continuous full-power operation (Refs. ML16312A224 and ML16312A225). This additional ORIGEN calculation results in a slightly larger source term yielding an increase in postulated doses of approximately 6% compared to the SAR Chapter 13 values. This small increase is more than offset however by the significant conservatism built into the original 30-day and 3-day assumptions.

This submittal has been reviewed and approved by UFTR management and by the Executive Committee of the Reactor Safety Review Subcommittee.

I declare under penalty of perjury that the foregoing and attached are true and correct to my knowledge.

Executed on November 30, 2016.

Brian Shea
Reactor Manager

cc: NRC Project Manager

UNIVERSITY OF FLORIDA

Program for Maintaining Occupational Radiation Exposure for Non-Medical Licensed Activities at the University of Florida, As Low As Reasonably Achievable (ALARA)

I. Management Commitment

A. The University of Florida is committed to the program described in this document for keeping radiation exposures (individual and collective) as low as reasonably achievable (ALARA). In accordance with this commitment, we hereby establish an administrative organization for radiation safety and will develop the necessary written policies, procedures, and instructions to foster the ALARA concept within our institution. The organization includes a Radiation Control Committee (RCC) and a Radiation Control Officer (RCO).

B. The RCO will perform a review to determine methods by which exposures might be lowered. This review shall include reviews of operating procedures and past exposure records, inspections and consultations with the radiation control staff. A brief summary of the audit will be prepared covering the scope of the review and the conclusions reached, and lessons learned, if any.

C. A representative of administration shall be an active member of the RCC. The University of Florida will consider any modifications or changes as recommended by the Committee including those resulting from the annual review of the radiation safety program performed by the RCO.

D. Modifications to operating and maintenance procedures and to equipment and facilities will be made when they will reduce exposures at reasonable costs. We will be able to demonstrate that improvements have been sought, that modifications have been considered, and that they have been implemented where reasonably achievable. Where modifications have been considered but not implemented, we will be prepared to describe the reasons for not implementing them.

E. In addition to maintaining doses to individuals as far below the limits as reasonably achievable, the sum of the doses received by all exposed individuals will also be maintained at the lowest practicable level.

II. Radiation Control Committee

A. Review of Proposed Users and Uses

1. The RCC will review the qualifications of each potential Principal Investigator (PI) and approved user of radioactive material and radiation producing devices with respect to the types and quantities of materials and uses for which he/she has applied to assure that the user will be able to take appropriate measures to maintain exposure ALARA.

2. When considering a new use of radioactive material, the RCC will review the efforts of the PI to maintain exposure ALARA. The

user shall have systematic procedures to ensure ALARA and must consider the use of special radiation safety equipment, such as rubber or disposable gloves, fume hoods, remote handling tools, and appropriate shielding in his/her proposed use, when appropriate.

B. Delegation of Authority

1. The RCC will delegate authority to the RCO for enforcement of the ALARA policy.

2. The RCC will support the RCO in those instances where it is necessary for the RCO to assert his authority. Where the RCO has been overruled by the RCC, the RCC will record the basis for its action.

C. Review of the ALARA Program

1. In association with the RCO, the RCC will perform an annual review of all current radiation safety procedures and the development of new procedures as appropriate to implement the ALARA concept.

2. The RCC will review all instances of deviations from the ALARA philosophy. Information in support of the review will be supplied by the RCO.

3. The RCC will evaluate the institution's overall effort for maintaining exposures ALARA. This annual review will include the efforts of the RCO, approved users and workers as well as those of the administration.

4. The RCC will perform a quarterly review of occupational radiation exposure with particular attention to instances in which the Investigational Levels in Table 1 of Section VI are exceeded. The principal purpose of this review is to assess trends in occupational exposure as an index of the ALARA program quality and to decide if action is warranted when Investigational Levels are exceeded.

III. Radiation Control Officer (RCO)

A. Annual and Quarterly Review

1. The RCO will perform an annual review of the radiation control program for adherence to ALARA concepts. Reviews of specific procedures may be conducted on a more frequent basis.

2. The RCO will review, at least quarterly, the external radiation exposures of approved users and workers to determine that their exposures are ALARA in accordance with the provisions of Section VI of this program.

3. The RCO will review, at least quarterly, the records of radiation level surveys in unrestricted and restricted areas to determine that radiation levels were ALARA during the previous quarter.

B. Education Responsibilities for ALARA Program

1. The RCO will inform PIs, approved users, workers, and ancillary personnel of ALARA program efforts.

2. The RCO will ensure that PIs, approved users, workers and ancillary personnel who may be exposed to radiation will be instructed in the ALARA philosophy and informed that the administration, the RCC, and the RCO are committed to implementing the ALARA concept.

C. Cooperative Efforts for Development of ALARA Procedures

PIs, approved users, workers and ancillary personnel will be given opportunities to participate in formulation of the procedures that they will be required to follow.

1. The RCO will be in close contact with all users and workers in order to develop ALARA procedures for using radioactive materials and radiation producing devices.

2. The RCO will establish procedures for receiving and evaluating suggestions for improving ALARA procedures and will encourage the use of these procedures.

D. Reviewing Instances of Deviation from Good ALARA Practices

The RCO will investigate all known instances of deviation from good ALARA practices and will determine the causes. The RCO may require changes in working procedures to maintain exposures ALARA.

IV. Approved Users

A. New Procedures Involving Potential Radiation Exposures

1. The PI will consult with and receive the advance approval of the RCO during the planning stage before using radioactive material for a new procedure.

2. The PI will evaluate all procedures before using radioactive material to ensure that exposure will be kept ALARA. This may be implemented through the application of trial runs.

B. Responsibility of Principal Investigator to Persons Under His/Her Supervision

1. The PI will explain the ALARA concept and his/her commitment to maintain exposures ALARA to all persons under his/her supervision.

2. The PI will ensure that persons under his/her supervision who are subject to occupational radiation exposure are trained and educated in good health physics practices and in maintaining exposures ALARA.

V. Persons Who Receive Occupational Radiation Exposure

A. The worker will be instructed in the ALARA concept and its relationship to working procedures and work conditions.

B. The worker will also be informed of recourses that are available if he/she feels that ALARA is not being promoted on the job.

VI. Establishment of Investigational Levels In Order to Monitor Individual Occupational External Radiation Exposures

The University hereby establishes Investigational Levels for occupational external radiation exposure which, when exceeded, will initiate review or investigation by the RCO with subsequent review by the RCC. The Investigational Levels are listed in Table 1. These levels apply to the exposure of individual workers. In cases where it is necessary for a worker's or a group of workers' doses to exceed these Investigational Levels, the University retains the right to establish new Investigational Levels on the basis that this is consistent with good ALARA practices for that individual or group. Justification for new Investigational Levels will be documented.

The RCO will review and initial the results of personnel monitoring not less than once in any calendar quarter. Prior specific approval to operate under the more liberal State or Federal regulations must be obtained for any such occasion from the RCC by submitting a written proposal through the Radiation Control Officer.

A. The following actions will be taken at the Investigational Levels as stated in Table 1.

1. Quarterly exposure of individuals to less than Investigational Level I.

   Except when deemed necessary by the RCO, no further action will be taken in those cases where an individual's exposure is less than Table 1 values for Investigational Level I.

2. Personnel exposures equal to or greater than Investigational Level I, but less than Investigational Level II.

   The RCO will investigate the exposure of each individual whose quarterly exposure equals or exceeds Investigational Level I and will report the results of the investigation at the first RCC meeting following the quarter when the exposure was recorded. If the exposure does not equal or exceed Investigational Level II, no further action related specifically to the exposure is required unless deemed necessary by the RCC. The RCC will, however, consider each such exposure in comparison with those of others performing similar tasks as an index of ALARA program quality and will record the review in the RCC minutes.

3. Personnel exposures equal to or greater than Investigational Level II, but less than Investigational Level III.

The RCO will investigate in a timely manner the causes of the exposure of each individual whose quarterly exposure equals or exceeds Investigational Level II and will report the results of the investigation and corrective action taken at the first RCC meeting following the quarter when the exposure was recorded. If the exposure does not equal or exceed Investigational Level III, no further action related specifically to the exposure is required unless deemed necessary by the RCC. The RCC will, however, consider each such exposure in comparison with those of others performing similar tasks as an index of ALARA program quality and will record the review in the RCC minutes.

4. Personnel exposures equal to or greater than Investigation Level III.

The RCO will promptly investigate the cause(s) of all personnel exposures equaling or exceeding Investigational Level III will take action as appropriate. A report of the investigation and corrective actions taken, if any, will be presented to the RCC at the first meeting following completion of the investigation. The details of these reports will be recorded in the minutes. RCC minutes will be sent to the administration of this institution for review. A report of the investigation will also be made available to the Florida Department of Health, Office of Radiation Control. The minutes, containing details of the investigation, will be made available to Departmental inspectors for review at the time of the next inspection.

Investigation Levels for Radiation Exposure (per calendar quarter)			
	Level I	Level II	Level III
Total Effective Dose Equivalent (whole body); or	125 mrem (1.25 mSv)	375 mrem (3.75 mSv)	1250 mrem (0.0125 Sv)
Sum of the deep-dose equivalent and the committed dose equivalent to any organ of tissue other than the lens of the eye	1250 mrem (0.0125 Sv)	3750 mrem (0.0375 Sv)	12500 mrem (0.125 Sv)
Lens of the eye (eye dose equivalent)	375 mrem (3.75 mSv)	1125 mrem (0.01125 Sv)	3750 mrem (0.0375 Sv)
Skin (shallow dose equivalent or to any extremity)	1250 mrem (0.0125 Sv)	3750 mrem (0.0375 Sv)	12500 mrem (0.125 Sv)

VII. Signature of Certifying Official

I hereby certify that this institution has implemented the ALARA program set forth above.

Signature Date 8-18-16

Curtis Reynolds
Vice President for Business Affairs
University of Florida

COMPLY: V1.6. 10/17/2016 3:55

40 CFR Part 61
National Emission Standards
for Hazardous Air Pollutants

REPORT ON COMPLIANCE WITH

THE CLEAN AIR ACT LIMITS FOR RADIONUCLIDE EMISSIONS

FROM THE COMPLY CODE - V1.6.

Prepared by:

UFTR

Prepared for:

U.S. Environmental Protection Agency
Office of Radiation and Indoor Air
Washington, DC 20460

COMPLY: V1.6. 10/17/2016 3:55

FHA July 2016

SCREENING LEVEL 3

DATA ENTERED:

Nuclide		Release Rate (curies/YEAR)
KR-85		4.186E-06
KR-85M		4.242E-08
KR-88		1.766E-10
I-129	D	1.130E-12
I-130	D	1.996E-09
I-131	D	1.144E-03
I-132	D	1.244E-03
I-133	D	3.393E-04
I-135	D	1.697E-06
XE-133		1.141E-02
XE-133M		9.083E-05
XE-135		1.896E-04
XE-135M		6.955E-07

Release height 9 meters.

Building height 8 meters.

The source and receptor are not on the same building.

Distance from the source to the receptor is 10 meters.

Building width 19 meters.

Default mean wind speed used (2.0 m/sec).

Distance from the SOURCE to the FARM producing
VEGETABLES is 1350 meters.

Distance from the SOURCE to the FARM producing
MILK and MEAT is 2700 meters.

NOTES:

Input parameters outside the "normal" range:

None.

COMPLY: V1.6. 10/17/2016
3:55

RESULTS:

Effective dose equivalent: 0.1 mrem/yr.

Effective dose equivalent: 0.1 mrem/yr due to Iodine.

*** Comply at level 3.

This facility is in COMPLIANCE.

It may or may not be EXEMPT from reporting to the EPA.

You may contact your regional EPA office for more
information.

********** END OF COMPLIANCE REPORT **********

FHA

MicroShield 9.07
Microsoft (9.07-0000)

Date	By	Checked

Filename	Run Date	Run Time	Duration
Rectangular_sourceFHA.msd	October 17, 2016	3:15:14 PM	00:00:00

Project Info	
Case Title	gaseous_source1
Description	Case 1
Geometry	13 - Rectangular Volume

Source Dimensions	
Length	1.2e+3 cm (40 ft 0.0 in)
Width	914.4 cm (30 ft)
Height	914.4 cm (30 ft)

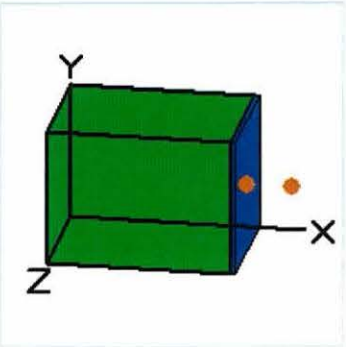

Dose Points			
A	X	Y	Z
#1	1.2e+3 cm (41 ft 0.0 in)	457.2 cm (15 ft)	457.2 cm (15 ft)
#2	1.6e+3 cm (51 ft)	457.2 cm (15 ft)	457.2 cm (15 ft)

Shields			
Shield N	Dimension	Material	Density
Source	3.60e+04 ft³	Air	.00122
Shield 1	1.0 ft	Concrete	2.35
Air Gap		Air	.00122

Source Input: Grouping Method - Standard Indices
Number of Groups: 25
Lower Energy Cutoff: .015
Photons < .015: Included
Library: Grove

Nuclide	Ci	Bq	µCi/cm³	Bq/cm³
I-129	4.5200e-012	1.6724e-001	4.4340e-015	1.6406e-010
I-130	7.9800e-009	2.9526e+002	7.8281e-012	2.8964e-007
I-131	4.5800e-003	1.6946e+008	4.4928e-006	1.6623e-001
I-132	4.9800e-003	1.8426e+008	4.8852e-006	1.8075e-001
I-133	1.3600e-003	5.0320e+007	1.3341e-006	4.9362e-002
I-135	6.7900e-006	2.5123e+005	6.6607e-009	2.4645e-004
Kr-85	4.1900e-006	1.5503e+005	4.1102e-009	1.5208e-004
Kr-85m	4.2400e-008	1.5688e+003	4.1593e-011	1.5389e-006
Kr-88	1.7700e-010	6.5490e+000	1.7363e-013	6.4243e-009
Xe-133	1.1400e-002	4.2180e+008	1.1183e-005	4.1377e-001
Xe-133m	9.0800e-005	3.3596e+006	8.9071e-008	3.2956e-003
Xe-135	1.9000e-004	7.0300e+006	1.8638e-007	6.8962e-003
Xe-135m	6.9600e-007	2.5752e+004	6.8275e-010	2.5262e-005

Buildup: The material reference is Shield 1
Integration Parameters

X Direction	10
Y Direction	20
Z Direction	20

Results - Dose Point # 1 - (41.001,15,15) ft									
Energy (MeV)	Activity (Photons/sec)	Fluence Rate MeV/cm²/sec No Buildup	Fluence Rate MeV/cm²/sec With Buildup	Exposure Rate mR/hr No Buildup	Exposure Rate mR/hr With Buildup	Absorbed Dose Rate mrad/hr No Buildup	Absorbed Dose Rate mrad/hr With Buildup	Absorbed Dose Rate mGy/hr No Buildup	Absorbed Dose Rate mGy/hr With Buildup
0.015	2.729e+07	1.058e-255	1.143e-27	9.072e-257	9.805e-29	7.920e-257	8.559e-29	7.920e-259	8.559e-31
0.03	2.140e+08	1.111e-37	3.119e-26	1.101e-39	3.091e-28	9.614e-40	2.699e-28	9.614e-42	2.699e-30
0.04	1.258e-02	1.288e-29	5.225e-29	5.697e-32	2.311e-31	4.973e-32	2.017e-31	4.973e-34	2.017e-33
0.08	1.592e+08	2.456e-07	6.086e-06	3.886e-10	9.632e-09	3.393e-10	8.408e-09	3.393e-12	8.408e-11
0.1	1.292e-02	2.431e-16	9.002e-15	3.720e-19	1.377e-17	3.247e-19	1.202e-17	3.247e-21	1.202e-19
0.15	4.579e+05	1.354e-07	6.676e-06	2.230e-10	1.099e-08	1.947e-10	9.598e-09	1.947e-12	9.598e-11
0.2	7.675e+06	9.571e-06	4.573e-04	1.689e-08	8.072e-07	1.475e-08	7.047e-07	1.475e-10	7.047e-09
0.3	1.595e+07	1.197e-04	4.281e-03	2.271e-07	8.120e-06	1.982e-07	7.089e-06	1.982e-09	7.089e-08
0.4	1.422e+08	3.529e-03	9.294e-02	6.876e-06	1.811e-04	6.003e-06	1.581e-04	6.003e-08	1.581e-06
0.5	8.906e+07	5.412e-03	1.094e-01	1.062e-05	2.147e-04	9.274e-06	1.874e-04	9.274e-08	1.874e-06
0.6	2.489e+08	3.075e-02	4.962e-01	6.002e-05	9.686e-04	5.240e-05	8.456e-04	5.240e-07	8.456e-06
0.8	1.817e+08	6.628e-02	7.558e-01	1.261e-04	1.438e-03	1.101e-04	1.255e-03	1.101e-06	1.255e-05
1.0	5.530e+07	4.521e-02	3.970e-01	8.333e-05	7.318e-04	7.275e-05	6.389e-04	7.275e-07	6.389e-06
1.5	2.980e+07	9.675e-02	5.496e-01	1.628e-04	9.247e-04	1.421e-04	8.073e-04	1.421e-06	8.073e-06
2.0	6.084e+06	4.791e-02	2.099e-01	7.409e-05	3.246e-04	6.468e-05	2.834e-04	6.468e-07	2.834e-06
3.0	5.053e-02	1.206e-09	3.852e-09	1.636e-12	5.226e-12	1.428e-12	4.562e-12	1.428e-14	4.562e-14
Totals	**1.178e+09**	**2.960e-01**	**2.616e+00**	**5.240e-04**	**4.792e-03**	**4.575e-04**	**4.184e-03**	**4.575e-06**	**4.184e-05**

Results - Dose Point # 2 - (51,15,15) ft									
Energy (MeV)	Activity (Photons/sec)	Fluence Rate MeV/cm²/sec No Buildup	Fluence Rate MeV/cm²/sec With Buildup	Exposure Rate mR/hr No Buildup	Exposure Rate mR/hr With Buildup	Absorbed Dose Rate mrad/hr No Buildup	Absorbed Dose Rate mrad/hr With Buildup	Absorbed Dose Rate mGy/hr No Buildup	Absorbed Dose Rate mGy/hr With Buildup
0.015	2.729e+07	5.989e-256	4.369e-28	5.137e-257	3.747e-29	4.485e-257	3.272e-29	4.485e-259	3.272e-31
0.03	2.140e+08	9.675e-38	1.192e-26	9.588e-40	1.182e-28	8.371e-40	1.031e-28	8.371e-42	1.031e-30
0.04	1.258e-02	1.144e-29	4.641e-29	5.059e-32	2.052e-31	4.416e-32	1.792e-31	4.416e-34	1.792e-33
0.08	1.592e+08	2.090e-07	5.160e-06	3.307e-10	8.165e-09	2.887e-10	7.128e-09	2.887e-12	7.128e-11
0.1	1.292e-02	2.039e-16	7.495e-15	3.120e-19	1.147e-17	2.724e-19	1.001e-17	2.724e-21	1.001e-19
0.15	4.579e+05	1.115e-07	5.415e-06	1.836e-10	8.917e-09	1.603e-10	7.785e-09	1.603e-12	7.785e-11
0.2	7.675e+06	7.793e-06	3.650e-04	1.375e-08	6.441e-07	1.201e-08	5.623e-07	1.201e-10	5.623e-09
0.3	1.595e+07	9.589e-05	3.341e-03	1.819e-07	6.338e-06	1.588e-07	5.533e-06	1.588e-09	5.533e-08
0.4	1.422e+08	2.790e-03	7.134e-02	5.436e-06	1.390e-04	4.746e-06	1.214e-04	4.746e-08	1.214e-06
0.5	8.906e+07	4.230e-03	8.279e-02	8.302e-06	1.625e-04	7.248e-06	1.419e-04	7.248e-08	1.419e-06
0.6	2.489e+08	2.379e-02	3.710e-01	4.643e-05	7.241e-04	4.053e-05	6.321e-04	4.053e-07	6.321e-06
0.8	1.817e+08	5.035e-02	5.536e-01	9.577e-05	1.053e-03	8.361e-05	9.193e-04	8.361e-07	9.193e-06
1.0	5.530e+07	3.381e-02	2.859e-01	6.231e-05	5.269e-04	5.440e-05	4.600e-04	5.440e-07	4.600e-06
1.5	2.980e+07	7.004e-02	3.819e-01	1.178e-04	6.425e-04	1.029e-04	5.609e-04	1.029e-06	5.609e-06
2.0	6.084e+06	3.383e-02	1.420e-01	5.231e-05	2.196e-04	4.567e-05	1.917e-04	4.567e-07	1.917e-06
3.0	5.053e-02	8.210e-10	2.510e-09	1.114e-12	3.405e-12	9.723e-13	2.972e-12	9.723e-15	2.972e-14
Totals	**1.178e+09**	**2.189e-01**	**1.892e+00**	**3.886e-04**	**3.475e-03**	**3.392e-04**	**3.033e-03**	**3.392e-06**	**3.033e-05**

COMPLY: V1.6. 10/17/2016 3:37

40 CFR Part 61
National Emission Standards
for Hazardous Air Pollutants

REPORT ON COMPLIANCE WITH

THE CLEAN AIR ACT LIMITS FOR RADIONUCLIDE EMISSIONS

FROM THE COMPLY CODE - V1.6.

Prepared by:

UFTR

Prepared for:

U.S. Environmental Protection Agency
Office of Radiation and Indoor Air
Washington, DC 20460

COMPLY: V1.6. 10/17/2016 3:37

MHA July 2016

SCREENING LEVEL 3

DATA ENTERED:

Nuclide		Release Rate (curies/YEAR)
KR-85		1.759E-04
KR-85M		1.782E-06
KR-88		7.422E-09
I-129	D	4.748E-11
I-130	D	8.385E-08
I-131	D	4.807E-02
I-132	D	5.229E-02
I-133	D	1.426E-02
I-135	D	7.128E-05
XE-133		4.795E-01
XE-133M		3.816E-03
XE-135		7.965E-03
XE-135M		2.922E-05

Release height 9 meters.

Building height 8 meters.

The source and receptor are not on the same building.

Distance from the source to the receptor is 10 meters.

Building width 19 meters.

Default mean wind speed used (2.0 m/sec).

Distance from the SOURCE to the FARM producing
VEGETABLES is 1350 meters.

Distance from the SOURCE to the FARM producing
MILK and MEAT is 2700 meters.

NOTES:

Input parameters outside the "normal" range:

None.

COMPLY: V1.6. 10/17/2016
3:37

RESULTS:

Effective dose equivalent: 6.0 mrem/yr.

Effective dose equivalent: 6.0 mrem/yr due to Iodine.

*** Failed at level 3.

This facility is NOT in COMPLIANCE (1).

Please send this report to your regional EPA office.

You may contact your regional EPA office to determine further
action.

(1) You may comply at a higher level.

********** END OF COMPLIANCE REPORT **********

MHA

MicroShield 9.07
Microsoft (9.07-0000)

Date	By	Checked

Filename	Run Date	Run Time	Duration
Rectangular_sourceMHA.msd	October 17, 2016	3:18:10 PM	00:00:00

Project Info	
Case Title	gaseous_source1
Description	Case 1
Geometry	13 - Rectangular Volume

Source Dimensions	
Length	1.2e+3 cm (40 ft 0.0 in)
Width	914.4 cm (30 ft)
Height	914.4 cm (30 ft)

Dose Points			
A	X	Y	Z
#1	1.2e+3 cm (41 ft 0.0 in)	457.2 cm (15 ft)	457.2 cm (15 ft)
#2	1.6e+3 cm (51 ft)	457.2 cm (15 ft)	457.2 cm (15 ft)

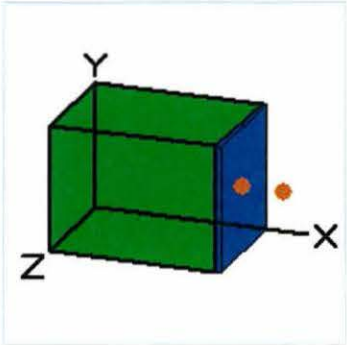

Shields			
Shield N	Dimension	Material	Density
Source	3.60e+04 ft³	Air	.00122
Shield 1	1.0 ft	Concrete	2.35
Air Gap		Air	.00122

Source Input: Grouping Method - Standard Indices
Number of Groups: 25
Lower Energy Cutoff: .015
Photons < .015: Included
Library: Grove

Nuclide	Ci	Bq	µCi/cm³	Bq/cm³
I-129	1.9000e-010	7.0300e+000	1.8638e-013	6.8962e-009
I-130	3.3500e-007	1.2395e+004	3.2862e-010	1.2159e-005
I-131	1.9200e-001	7.1040e+009	1.8834e-004	6.9688e+000
I-132	2.0900e-001	7.7330e+009	2.0502e-004	7.5858e+000
I-133	5.7000e-002	2.1090e+009	5.5915e-005	2.0689e+000
I-135	2.8500e-004	1.0545e+007	2.7957e-007	1.0344e-002
Kr-85	1.7589e-004	6.5079e+006	1.7254e-007	6.3840e-003
Kr-85m	1.7823e-006	6.5945e+004	1.7484e-009	6.4690e-005
Kr-88	7.4218e-009	2.7461e+002	7.2805e-012	2.6938e-007
Xe-133	4.7950e-001	1.7742e+010	4.7037e-004	1.7404e+001
Xe-133m	3.8164e-003	1.4121e+008	3.7437e-006	1.3852e-001
Xe-135	7.9648e-003	2.9470e+008	7.8132e-006	2.8909e-001
Xe-135m	2.9223e-005	1.0813e+006	2.8667e-008	1.0607e-003

Buildup: The material reference is Shield 1
Integration Parameters

X Direction	10
Y Direction	20
Z Direction	20

Results - Dose Point # 1 - (41.001,15,15) ft									
Energy (MeV)	Activity (Photons/sec)	Fluence Rate MeV/cm²/sec No Buildup	Fluence Rate MeV/cm²/sec With Buildup	Exposure Rate mR/hr No Buildup	Exposure Rate mR/hr With Buildup	Absorbed Dose Rate mrad/hr No Buildup	Absorbed Dose Rate mrad/hr With Buildup	Absorbed Dose Rate mGy/hr No Buildup	Absorbed Dose Rate mGy/hr With Buildup
0.015	1.148e+09	4.448e-254	4.807e-26	3.815e-255	4.123e-27	3.331e-255	3.600e-27	3.331e-257	3.600e-29
0.03	8.999e+09	4.673e-36	1.312e-24	4.631e-38	1.300e-26	4.043e-38	1.135e-26	4.043e-40	1.135e-28
0.04	5.287e-01	5.415e-28	2.196e-27	2.395e-30	9.714e-30	2.091e-30	8.480e-30	2.091e-32	8.480e-32
0.08	6.697e+09	1.033e-05	2.560e-04	1.634e-08	4.051e-07	1.427e-08	3.536e-07	1.427e-10	3.536e-09
0.1	5.416e-01	1.019e-14	3.775e-13	1.560e-17	5.775e-16	1.362e-17	5.041e-16	1.362e-19	5.041e-18
0.15	1.922e+07	5.683e-06	2.802e-04	9.358e-09	4.614e-07	8.170e-09	4.028e-07	8.170e-11	4.028e-09
0.2	3.218e+08	4.013e-04	1.918e-02	7.083e-07	3.385e-05	6.184e-07	2.955e-05	6.184e-09	2.955e-07
0.3	6.690e+08	5.020e-03	1.795e-01	9.522e-06	3.405e-04	8.312e-06	2.973e-04	8.312e-08	2.973e-06
0.4	5.962e+09	1.479e-01	3.897e+00	2.883e-04	7.592e-03	2.517e-04	6.628e-03	2.517e-06	6.628e-05
0.5	3.735e+09	2.270e-01	4.587e+00	4.455e-04	9.003e-03	3.889e-04	7.860e-03	3.889e-06	7.860e-05
0.6	1.045e+10	1.290e+00	2.082e+01	2.519e-03	4.065e-02	2.199e-03	3.548e-02	2.199e-05	3.548e-04
0.8	7.625e+09	2.782e+00	3.172e+01	5.291e-03	6.033e-02	4.619e-03	5.267e-02	4.619e-05	5.267e-04
1.0	2.321e+09	1.897e+00	1.666e+01	3.497e-03	3.071e-02	3.053e-03	2.681e-02	3.053e-05	2.681e-04
1.5	1.251e+09	4.060e+00	2.306e+01	6.831e-03	3.881e-02	5.963e-03	3.388e-02	5.963e-05	3.388e-04
2.0	2.553e+08	2.011e+00	8.810e+00	3.109e-03	1.362e-02	2.714e-03	1.189e-02	2.714e-05	1.189e-04
3.0	2.119e+00	5.056e-08	1.615e-07	6.859e-11	2.191e-10	5.988e-11	1.913e-10	5.988e-13	1.913e-12
Totals	**4.945e+10**	**1.242e+01**	**1.098e+02**	**2.199e-02**	**2.011e-01**	**1.920e-02**	**1.756e-01**	**1.920e-04**	**1.756e-03**

Results - Dose Point # 2 - (51,15,15) ft									
Energy (MeV)	Activity (Photons/sec)	Fluence Rate MeV/cm²/sec No Buildup	Fluence Rate MeV/cm²/sec With Buildup	Exposure Rate mR/hr No Buildup	Exposure Rate mR/hr With Buildup	Absorbed Dose Rate mrad/hr No Buildup	Absorbed Dose Rate mrad/hr With Buildup	Absorbed Dose Rate mGy/hr No Buildup	Absorbed Dose Rate mGy/hr With Buildup
0.015	1.148e+09	2.519e-254	1.837e-26	2.160e-255	1.576e-27	1.886e-255	1.376e-27	1.886e-257	1.376e-29
0.03	8.999e+09	4.069e-36	5.014e-25	4.032e-38	4.969e-27	3.520e-38	4.338e-27	3.520e-40	4.338e-29
0.04	5.287e-01	4.808e-28	1.951e-27	2.126e-30	8.627e-30	1.856e-30	7.531e-30	1.856e-32	7.531e-32
0.08	6.697e+09	8.788e-06	2.170e-04	1.391e-08	3.434e-07	1.214e-08	2.998e-07	1.214e-10	2.998e-09
0.1	5.416e-01	8.552e-15	3.143e-13	1.308e-17	4.808e-16	1.142e-17	4.198e-16	1.142e-19	4.198e-18
0.15	1.922e+07	4.679e-06	2.273e-04	7.705e-09	3.742e-07	6.726e-09	3.267e-07	6.726e-11	3.267e-09
0.2	3.218e+08	3.268e-04	1.530e-02	5.768e-07	2.701e-05	5.035e-07	2.358e-05	5.035e-09	2.358e-07
0.3	6.690e+08	4.021e-03	1.401e-01	7.628e-06	2.658e-04	6.659e-06	2.320e-04	6.659e-08	2.320e-06
0.4	5.962e+09	1.170e-01	2.991e+00	2.279e-04	5.828e-03	1.990e-04	5.087e-03	1.990e-06	5.087e-05
0.5	3.735e+09	1.774e-01	3.472e+00	3.482e-04	6.815e-03	3.040e-04	5.950e-03	3.040e-06	5.950e-05
0.6	1.045e+10	9.982e-01	1.557e+01	1.948e-03	3.039e-02	1.701e-03	2.653e-02	1.701e-05	2.653e-04
0.8	7.625e+09	2.113e+00	2.323e+01	4.019e-03	4.419e-02	3.509e-03	3.858e-02	3.509e-05	3.858e-04
1.0	2.321e+09	1.419e+00	1.200e+01	2.615e-03	2.211e-02	2.283e-03	1.931e-02	2.283e-05	1.931e-04
1.5	1.251e+09	2.939e+00	1.603e+01	4.945e-03	2.696e-02	4.317e-03	2.354e-02	4.317e-05	2.354e-04
2.0	2.553e+08	1.420e+00	5.960e+00	2.195e-03	9.217e-03	1.917e-03	8.046e-03	1.917e-05	8.046e-05
3.0	2.119e+00	3.442e-08	1.052e-07	4.670e-11	1.428e-10	4.077e-11	1.246e-10	4.077e-13	1.246e-12
Totals	**4.945e+10**	**9.188e+00**	**7.940e+01**	**1.631e-02**	**1.458e-01**	**1.424e-02**	**1.273e-01**	**1.424e-04**	**1.273e-03**

CHAPTER 1

THE FACILITY

Chapter 1 – Valid Pages

i	Rev. 0	11/30/2016
ii	Rev. 0	11/30/2016
1-1	Rev. 0	11/30/2016
1-2	Rev. 0	11/30/2016

TABLE OF CONTENTS

LIST OF TABLES

1 The Facility

1.1 Introduction

This Safety Analysis Report (SAR) supports an application for license renewal to the U.S. Nuclear Regulatory Commission (NRC) by the University of Florida for the utilization of its modified Argonaut type reactor.

The reactor is owned and operated by the University of Florida for the purpose of training and research including neutron irradiation services for a wide variety of scientific applications. The reactor is known as the University of Florida Training Reactor (UFTR).

The information and analyses presented show that the UFTR can continue to be operated at 100 kW (thermal) rated power without undue risk to the health and safety of the public.

1.2 Summary and Conclusions on Principal Safety Considerations

Possible failures or accident situations have been analyzed and discussed in Chapter 13, including the effects of a rapid reactivity insertion, radioactive fission product release, and loss of coolant flow.

The inherent safety of the UFTR is based on strong negative temperature and void coefficients combined with limited excess reactivity which limit the peak power achievable, thus preventing fuel damage from credible reactivity events.

The operating power level of 100 kW results in a decay heat small enough that loss of cooling water does not result in fuel damage.

For the bounding case of the maximum hypothetical accident where fuel cladding is assumed to be removed, the resulting estimated doses to occupational workers and the general public are well within the annual limits given in 10 CFR 20.

1.3 General Description

The main University of Florida campus is located in the Southwestern quadrant of the greater Gainesville area approximately one mile from the historic center of the city (University Avenue and Main Street).

The Reactor Building is located on the main campus in the immediate vicinity of the College of Engineering and the College of Journalism. The Nuclear Sciences Building is annexed to the Reactor Building.

The UFTR is owned and operated by the University of Florida under the NRC License Number R-56 (Docket Number 50- 83). The UFTR is of the general type known as the Argonaut. The reactor is heterogeneous in design using low enriched uranium silicide-aluminum fuel elements in a two slab geometry. Water is used as a coolant and also as moderator. The fuel is contained in MTR-type plates assembled in bundles. The remainder of the moderator consists of graphite blocks which surround the boxes containing the fuel bundles and the water moderator. The biological shield is made of cast-in place concrete with additional sections of removable concrete shielding. The reactor has an authorized maximum steady-state thermal power of 100 kW.

Significant features of the reactor include:

- four swinging-arm type control blades;
- passive power excursion protection by primary coolant rupture disk; and
- numerous irradiation facilities including horizontal and vertical beam ports, thermal column, shield tank, and pneumatic transfer system utilizing a horizontal throughport.

1.4 Shared Facilities and Equipment

The UFTR is an integral part the Reactor Building and thus shares walls, water supplies, and main electrical supply. The ventilation systems, electrical distribution, and water distribution, are all separate.

1.5 Comparison with Similar Facilities

The UFTR has been operated since 1959 so considerable safe operating experience is available for review.

All similar Argonaut research reactors in the United States have been shutdown; they were located at the University of Washington, University of California at Los Angeles (UCLA), Iowa State University, and at Virginia Polytechnic Institute. Of these, the UCLA R-1 reactor design had the greatest similarity to the UFTR.

1.6 Summary of Operations

The UFTR utilization has been supported by a variety of usages including research and educational utilization by users within the University of Florida as well as by other researchers and educators. The Neutron Activation Analysis (NAA) Laboratory has favorably impacted on all areas of utilization from research projects using neutron activation analysis to training and educational uses for students at all levels.

UFTR energy generation is limited by a codified ALARA constraint on Argon-41 emissions. The maximum annual average availability since the previous license renewal in 1982 was 91.5% for the period from September 1986 to August 1987.

Following conversion to low enriched fuel in 2006, the reactor entered a prolonged outage period in 2008 until 2015. Reasons for this prolonged outage included; personnel turnover, primary piping replacement, security and facility upgrades, and license basis reconstitution in support of license renewal.

Looking forward, UFTR management expects to continue to modernize the facility and increase UFTR utilization while continuing to pursue opportunities for growth in existing and new program areas.

1.7 Compliance with the Nuclear Waste Policy Act of 1982

In accordance with U.S. Department of Energy (DOE) contract with the UFTR, the DOE retains title to the UFTR reactor fuel and is obligated to provide for its long-term disposal following return by the UFTR.

1.8 Facility Modifications and History

The UFTR has been operational since May 1959 when it was first licensed to operate at 10 kW. A brief chronology of the key dates and events in the history of the UFTR is given below.

Table 1-1
Brief Chronology of Key Dates and Events in UFTR History

Date	Event
May 1959	Initial operating license issued. Licensed power limited to 10 kW.
May 1959	Initial criticality of the UFTR.
January 1964	Licensed power level increased to 100 kW.
August 1982	Renewal of the operating license for 20 years
July 2002	License renewal application submitted for new license.
August 2006	Conversion to LEU

CHAPTER 2

SITE CHARACTERISTICS

Chapter 2 – Valid Pages

i	Rev. 0	11/30/2016
ii	Rev. 0	11/30/2016
2-1	Rev. 0	11/30/2016
2-2	Rev. 0	11/30/2016
2-3	Rev. 0	11/30/2016
2-4	Rev. 0	11/30/2016
2-5	Rev. 0	11/30/2016
2-6	Rev. 0	11/30/2016
2-7	Rev. 0	11/30/2016
2-8	Rev. 0	11/30/2016
2-9	Rev. 0	11/30/2016
2-10	Rev. 0	11/30/2016
2-11	Rev. 0	11/30/2016

TABLE OF CONTENTS

LIST OF TABLES

LIST OF FIGURES

2. SITE CHARACTERISTICS

This chapter describes the site characteristics of the UFTR on the University of Florida campus including characteristics in the vicinity of the UFTR and their relation to the safety and operation of the UFTR.

The conclusion reached in this chapter and throughout this document is that the selected site is well-suited for the UFTR when considering the inherently safe design of the reactor and relatively benign consequences of the Maximum Hypothetical Accident (MHA). This is consistent with the conclusions reached for the other non-power reactor facilities throughout the world. Many of which are located on university campuses, in hospitals, and other highly populated areas.

2.1 Geography and Demography

2.1.1 Site Location and Description

The UFTR is located on the campus of the University of Florida in Gainesville, Florida. The city of Gainesville is approximately in the center of Alachua County, which is in the north-central part of Florida, approximately midway between the Atlantic Ocean and the Gulf of Mexico. The Gulf of Mexico is about 50 miles to the southwest and the Atlantic Ocean is about 65 miles to east.

2.1.1.1 Specification and Location

The UFTR is located in the northeast quadrant of the main University of Florida campus approximately two miles from the historic center of the city (University Avenue and Main Street).

The UFTR location is approximately:

- 20 meters south of the Reed Laboratory;
- 40 meters west of Weimer Hall - Journalism College;
- 90 meters east of Rhines Hall - Materials Sciences;
- 130 meters north of the J.W. Reitz Union; and
- 190 meters east of East Hall, the closest residence hall.

Figures 2.1, 2.2, and 2.3 illustrate the location of the UFTR with respect to the city of Gainesville and the UF campus.

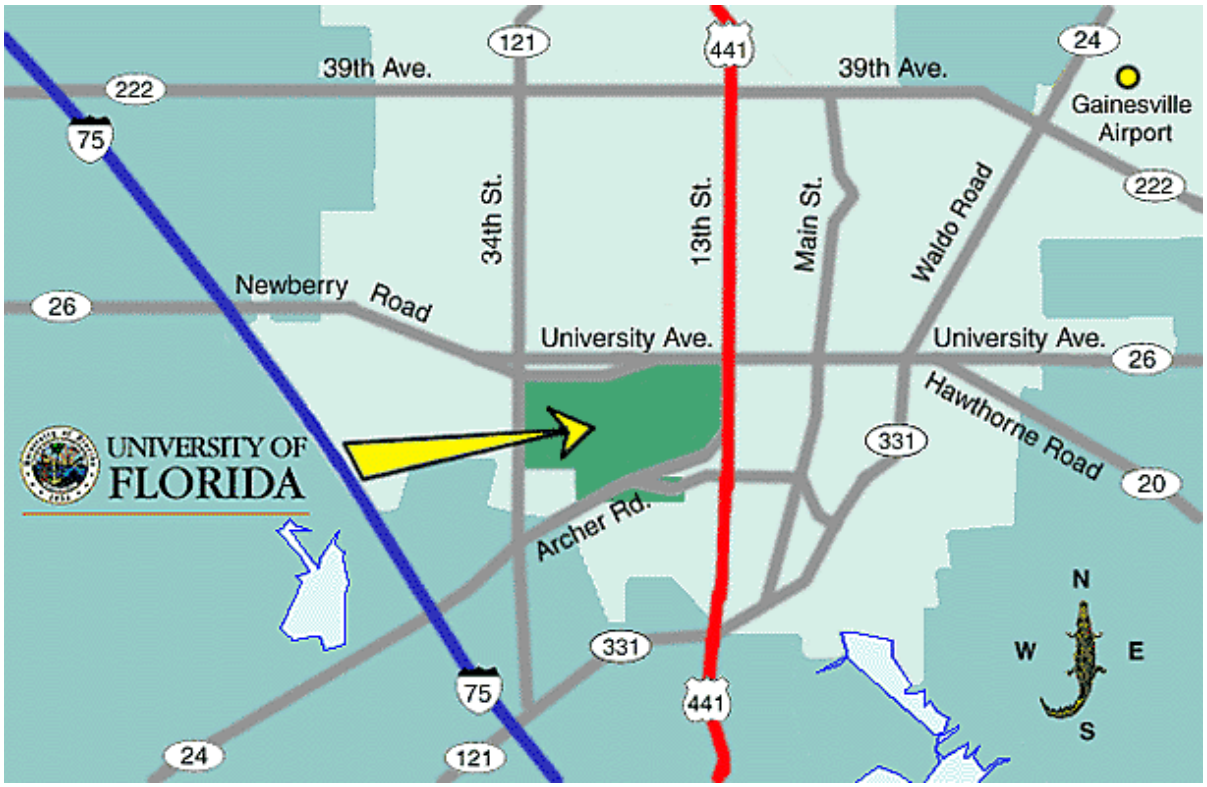

Figure 2-1 Map of the Greater Gainesville Area Showing Placement of University of Florida and Major Landmarks

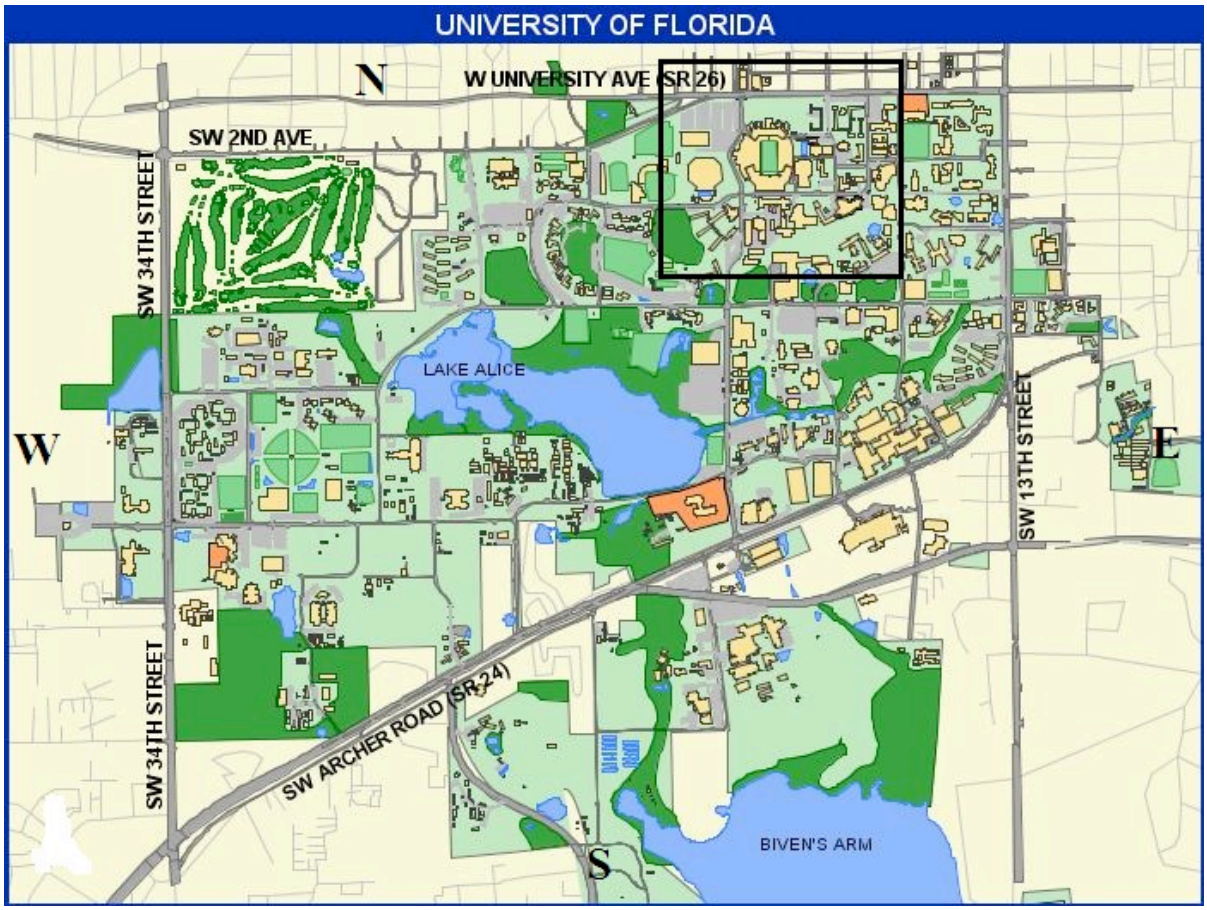

Figure 2-2 Map of the University of Florida Campus

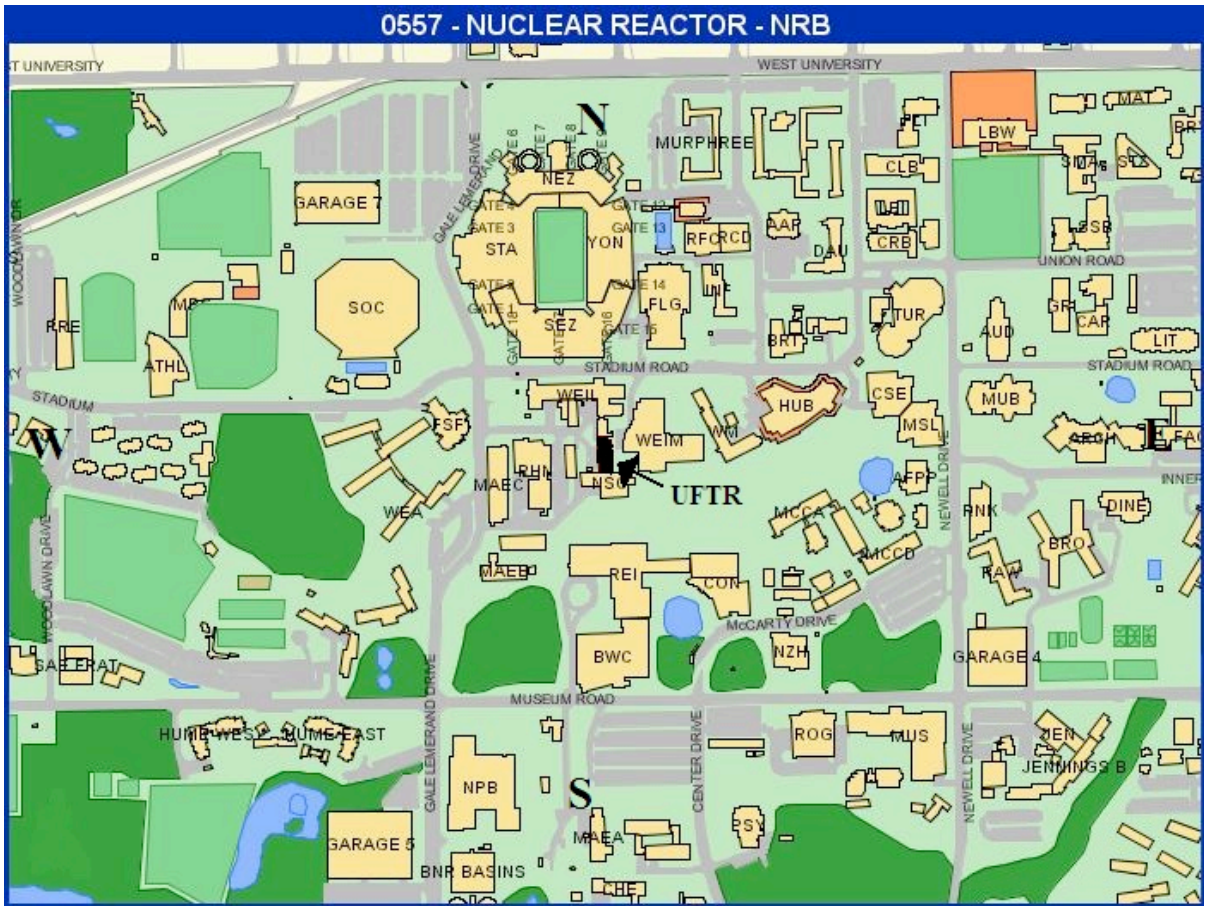

Figure 2-3 UFTR Location (Bldg. 557) on the University of Florida Campus

2.1.1.2 Boundary and Zone Area Maps

The map indicated in Figure 2-1 shows the property boundaries of the University of Florida campus. The site boundary lines are the same as the property lines. The locations of the principal structures in the vicinity of the reactor building are shown in Figure 2-3.

The operations boundary is the reactor building and annex (designated UF Bldg. 557), including the west fenced lot as necessary.

2.1.1.3 Population Distribution

Based on 2010 U.S. Census Bureau data, the city of Gainesville, Florida has a population of 171,187 with a total population in Alachua County of 247,336 (Ref. 2.1). The University of Florida has a population (student and employees) of approximately 65,000 people.

The University of Florida houses approximately 9,500 residents in all of the student residence halls and family housing. The nearest to UFTR is East Hall which is located approximately 190 meters west and has a capacity of approximately 210 residents. East Hall is part of a series of buildings referenced as the Tolbert area capable of housing approximately 990 residents.

2.2 Nearby Industrial, Transportation and Military Facilities

2.2.1 Location and Routes

Transportation routes located close to campus are shown in Figures 2-1 through 2-3. State Roads 121, 26 and 24, U.S. Highway 441 and Interstate 75 are well-traveled, major transportation routes through and/or around Gainesville. The primary usage of State Roads 121, 26 and 24 and U.S. Highway 441 are for commuter travel to the University of Florida and to the center of the city. Interstate 75 is used primarily for commuter travel to/from surrounding cities and for tourist travel to South and Central Florida. Other uses for all of the above roads include shipment of dangerous, toxic or explosive substances; however such usage would be minimal particularly for those roads nearest the UFTR site, i.e., State Roads 26, 121,and 24 and U.S. Highway 441.

The UFTR location is approximately:

- 450 meters south of the State Road 26;
- 850 meters west of U.S. Highway 441;
- 1300 meters north of State Road 24; and
- 2400 meters east of State Road 121.

Since the reactor building is located between the Nuclear Sciences Building on the south side and the Reed laboratory building on the north, any explosion of transported materials would first have to exert its effect on both of these buildings. Although not immediately adjacent, the same protection is afforded on the east side by the Journalism Building and on the west side by the unoccupied Chiller Unit Facility. The location of the UFTR building in relationship to all nearby buildings and the campus in general provides for shielding and a protective effect from the forces of explosion on all sides.

There are no refineries, chemical plants, mining facilities, manufacturing facilities, water transportation routes, fuel storage facilities, military facilities, or rail yards located near the UFTR.

2.2.2 Air Traffic

The Gainesville Regional Airport is the only airport in the vicinity. The airport is located on the northeast edge of Gainesville, approximately eight (8) kilometers northeast of the UFTR.

The Gainesville Regional Airport has two runways with a total of approximately 11,660 ft. of runway length (compass headings of approximately 240º and 280º). The airport averages approximately 190 aircraft operations per day and has approximately 119 aircraft based on it, 95 of which are single engine aircraft (Ref. 2.2).

Based on the low probability of aircraft accidents, the relatively small number of operations, the size of most aircraft involved, the orientation of the runways, the distance between the UFTR and the airport, the relatively small areas of aircraft impact, and the protected location of the UFTR building in reference to other surrounding buildings, it is concluded that the probability for an aircraft accident affecting the UFTR facility is remote.

2.2.3 Analysis of Potential Accidents at Facilities

Gainesville is primarily an education-related, small-business-oriented city. The areas surrounding the UFTR site and University of Florida campus are representative of most of Gainesville, consisting primarily of residential areas, apartment complexes and small businesses such as restaurants, retail stores, etc. A study of area activities shows that there are no significant industrial activities in this immediate area that could lead to potential accidents having an effect on the UFTR Reactor Building.

2.3 Meteorology

2.3.1 General and Local Climate

Alachua County, in the north-central part of Florida, is located approximately midway between the Atlantic Ocean and the Gulf of Mexico. The average year in Alachua County may be divided into two seasons: the warm, rainier season and a cooler, drier season. The warm, rainier season runs from about the middle of May to the end of September. The cooler, drier season dominates the remainder of the year.

2.3.1.2 Humidity

Relative humidity is highest during morning hours and generally averages between 89-95% throughout the year. During the afternoon, humidity is generally lower with an average ranging from about 55-64% during the warmer, rainier season and 49-60% during the remainder of the year (Ref. 2.3).

2.3.1.3 Wind

A 30-year wind rose is used to describe the average wind speed and wind direction. This wind summary data is provided in Table 2-1 below.

Table 2-1 Wind Data Summary for January 1, 1980 to December 31, 2009 for the Gainesville Regional Airport (Ref. 2.4)

Direction - From	Frequency	Speed (m/s)
N	5.90%	3.35
NNE	4.50%	3.50
NE	5.20%	3.65
ENE	5.20%	3.71
E	7.50%	3.60
ESE	4.10%	3.50
SE	3.70%	3.55

SSE	3.10%	3.50
S	4.50%	3.60
SSW	3.30%	3.76
SW	3.50%	3.96
WSW	4.60%	4.32
W	7.50%	4.07
WNW	4.90%	3.60
NW	4.60%	3.40
NNW	3.80%	3.29
Calm	22.60%	0.00
Variable	1.60%	2.11
	Mean Wind Speed =	2.81

2.3.1.4 Temperature and Precipitation

Temperature and precipitation summary data is provided in Table 2-2 below.

Table 2-2 Temperature and Precipitation Data Summary for May 1, 1960 to April 30, 2012 for the Gainesville Regional Airport (Ref. 2.3)

	Average Climate Summary		
Month	Maximum Temp (F)	Minimum Temp (F)	Total Precipitation (in)
Jan	66.5	42.5	3.27
Feb	69.4	45.1	3.55
Mar	75.2	49.9	3.72
Apr	81.1	55.1	2.22
May	87.1	62.6	2.74
Jun	89.8	69.0	6.91
Jul	90.7	71.4	6.63
Aug	90.3	71.6	7.06
Sep	87.3	69.0	5.01
Oct	81.3	60.1	2.77
Nov	74.4	50.8	1.87
Dec	68.0	43.9	2.56
Annual	80.1	57.6	48.32

2.3.1.5 Severe Weather Phenomena

2.3.1.5.1 Tropical Storms and Hurricanes

Tropical storms and hurricanes are not considered a great hazard at the University of Florida reactor site for three reasons. First, the likelihood of a hurricane traversing Alachua County is very small. Second, the severity of the storm is reduced by the overland movement necessary for a storm from the Gulf of Mexico or the Atlantic Ocean to reach the Gainesville area. Third, tidal flooding is prevented by the inland location of the UFTR site and there are no significant bodies of water near the UFTR site. Experience with the passage of past hurricanes indicates maximum gusts of approximately 60 miles per hour around the site. It should be noted that even thunderstorms occasionally develop gusts of this severity.

2.3.1.5.2 Tornadoes

As shown in Table 2-3, a total of forty-two tornado events have been recorded in Alachua County from 1950 to 2013 (Refs. 2.4, 2.5). From this total, eight tornadoes reached a magnitude of F2 (Fujita Scale) with the last occurring in 1986.

Table 2-3 Alachua County Tornado Events from 1950 to 2013

Date	Fujita Scale	Deaths	Injuries
6/8/57	F2	0	0
8/16/64	F1	0	0
9/21/66	F1	0	0
9/28/66	F2	0	0
12/25/69	F1	0	0
2/3/70	F2	0	0
5/11/71	F1	0	0
4/4/73	F2	0	0
1/25/75	F0	0	0
7/6/76	F1	0	0
6/21/77	F1	0	0
4/19/78	F2	0	6
5/1/78	F0	0	0
5/4/78	F2	0	4
6/21/79	F1	0	0
5/25/80	F1	0	0
7/6/80	F1	0	0
10/28/80	F1	0	0
3/22/81	F0	0	0
2/2/83	F2	0	4
6/21/83	F1	0	0
6/30/85	F1	0	0
3/14/86	F2	0	0
7/9/87	F0	0	0
8/8/90	F0	0	0
9/28/90	F0	0	0
6/13/92	F0	0	1
3/12/93	F1	1	4
10/30/93	F0	0	0
10/30/93	F0	0	0
1/3/94	F0	0	0
10/30/94	F0	0	0
4/8/95	F0	0	0
2/2/96	F0	0	0
7/20/02	F0	0	0
4/25/03	F0	0	0
4/25/03	F0	0	0
9/5/04	F0	0	0
8/3/05	F0	0	0
12/16/07	EF1	0	0
2/26/08	EF0	0	0
3/24/12	EF0	0	0

According to statistical methods provided by Thom (Ref. 2.6), the probability per year of a tornado striking a point within a given area may be estimated using Equation 2-1 as follows:

$$P = \frac{ZT}{A} \qquad \textbf{Equation 0-1}$$

where symbols are defined as follows:

P = the mean probability per year of a tornado striking a point within area A.
Z = the geometric mean tornado path area, square miles.
T = the mean number of tornadoes per year in the area.
A = the area of concern, square miles.

The value of T (mean number of tornadoes per year) is very conservatively taken as 1.0 per year for the 63 year period (1950 – 2013) for Alachua County. Based on data reported by Thom (Ref. 2.6) for midwest tornadoes, an average tornado path area is about 2.82 square miles which is the applicable but conservative value used for Z. Using the value of A equivalent to the total land area of Alachua County (965 square miles) in which the UFTR site is located, a value of $P = 2.92 \times 10^{-3}$ /year is calculated as the mean probability per year of a tornado striking within the UFTR site.

This probability of such a tornado striking within the UFTR site (reactor building occupies less than an acre) is conservative because the mean tornado path area in Florida is less than the national average used in the calculation. In addition other nearby campus structures surrounding the reactor building provide significant protection.

The mean recurrence interval, R=1/P, of a tornado striking a point anywhere in which the site is located is, therefore, about 342 years. However, in the period from 1950 to 2013, only 25 property-damaging tornadoes have been reported in Alachua County, Florida where the site is located (also equivalent to a smaller probability of $P= 1.16 \times 10^{-3}$ /year which further emphasizes the conservatism of the $P = 2.92 \times 10^{-3}$ /year value calculated above). Though this probability is conservative and very low, tornadoes are considered to be the most likely natural disaster to affect the UFTR site.

2.4 Hydrologic Engineering

2.4.1 Flooding

There are no dams in the University of Florida - Gainesville area that could affect the reactor site in case of failure. No major streams or rivers run near the site area which is well inland removing the potential for tidal flooding. Because of this, and the well-drained location of the UFTR site, no special consideration is given to floods in the UFTR design.

Exhaustive studies have indicated no record of any major flood in the general UFTR site area during the past 100 years. Figure 2.4 shows the FEMA flood map in effect since June 2006 illustrating that the UFTR is located in an area designated Zone X (areas outside the potential floodplain). Portions of Lake Alice and the Wastewater Treatment plant are shown near the bottom of Figure 2.4 in an area designated Zone A (nearest potential floodplain – no base flood elevations determined).

Finally, emergency flood procedures are addressed in the UFTR Standard Operating Procedures so no further consideration is necessary here.

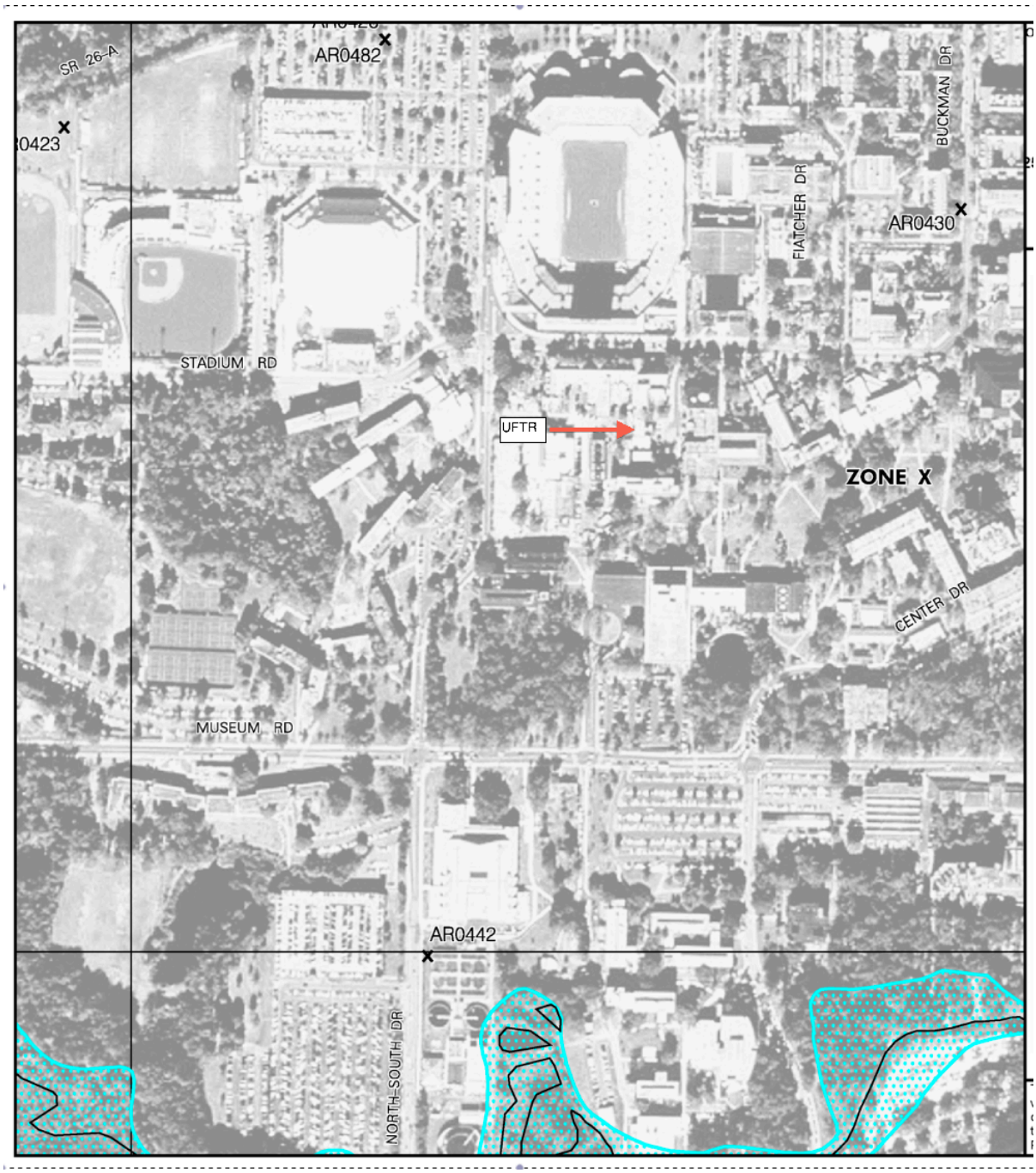

Figure 2-4 FEMA Flood Map Showing UFTR Location in Flood Zone 'X'

2.5 Geology, Seismology and Geotechnical Engineering

2.5.1 Regional Geology

The solid bedrock in this area is porous and cavernous Ocala limestone which occurs in a broad truncated dome with its crest in Levy County southwest of Gainesville. The Ocala formation is overlain by other porous

limestones and semipermeable sandy clays (Hawthorne formation). This is capped by loose surface sands.

2.5.2 Site Geology

The specific site geology is very similar to that of the region as a whole. Most of the Gainesville area and that part of the campus north of Radio Road, including the UFTR site, is underlain by a loamy fine-sand type of soil. This was derived from residual Hawthorne formation and is characterized by a typical slope of 2 to 7 percent, light brown or brownish grey surface soil, light yellowish brown or pale brown subsoil, nearly loose to loose with good natural drainage.

2.5.3 Surface Faulting

There is ample evidence that Florida has been stable and free of earthquakes for about one million years, and it is considered to be one of the most stable areas in the entire United States. There have, however, been several small earth tremors which have caused slight damage such as small cracks in plaster wall in some areas of the state.

2.5.4 Stability of Subsurface Materials and Foundations

The limerock formations are very stable geologically as indicated by the relative absence of earth movement activity in Florida over the past million years.

2.5.5 Stability of Slopes

There are no rocks or soil slopes of concern for the UFTR site. The general downward incline toward the west and south eliminates the possibility of drainage or flooding problems. The general site and area topography have shown that this area is very stable. There is no danger of landslides since the general slope of the land is a gradual incline with no sharp contours.

2.6 References

2.1 United States Census Bureau, www.census.gov, 2010 Census.

2.2 Federal Aviation Administration - Gainesville RGNL Airport Master Record, www.gcr1.com, January 2013.

2.3 The Southeast Regional Climate Center, www.sercc.com

2.4 NOAA Online Climate Data Center, www.ncdc.noaa.gov

2.5 Tornado Project, Florida Tornados 1950-1995, www.tornadoproject.com

2.6 Thom, H.C.S., WMO Technical Note #81, 1966.

CHAPTER 3

DESIGN OF STRUCTURES, COMPONENTS, EQUIPMENT AND SYSTEMS

Chapter 3 – Valid Pages

i	Rev. 0	11/30/2016
ii	Rev. 0	11/30/2016
3-1	Rev. 0	11/30/2016
3-2	Rev. 0	11/30/2016

TABLE OF CONTENTS

3 DESIGN OF STRUCTURES, COMPONENTS, EQUIPMENT AND SYSTEMS

3.1 Design Criteria

The overall reactor building measures approximately 60 ft. by 80 ft. The current floor plan is primarily aimed for improving area utilization and control. Some relatively minor alterations have been made to the first floor and the second floor of the UFTR building since its first license. All building modifications and equipment additions were in conformance with the building codes in existence at the time. None of these changes is considered to impact reactor safety.

The UFTR principal physical barrier to fission product release is the fuel cladding. Because of the fuel material and core design, the fuel and moderator temperature reactivity coefficients are negative assuring inherent protection. Safe reactor operation is guaranteed by this inherently safe reactor design and by limiting the installed excess reactivity. Calculations presented in Chapters 4 and 13 demonstrate that the safety limit on the temperature of the fuel will not be exceeded and that residual heat removal is not necessary even under loss of coolant moderator.

The scenarios analyzed in Chapter 13 conservatively demonstrate that instrumented shutdown actions and building confinement are not necessary to ensure that radiological doses will not exceed 10 CFR Part 20 allowable limits.

The UFTR coolant works at near ambient pressure and low temperatures. The primary coolant system transfers the heat from the reactor to the heat exchanger. The heat is removed by the secondary coolant system to the storm sewer with no mixing of water between the two systems. The secondary system water pressure is maintained slightly higher than the primary system. Any leakage from the secondary system to the primary system will lead to an increase in the primary water resistivity which is detected by the conductivity cell located before the purification system. Integrity of piping is also checked through flow and level measurement instruments.

Electric power to UFTR is the same one that supplies the whole university. The system is failsafe in design and electrical power is not needed for any active safety function.

The control blades are “fail-safe” in the sense that they will drop into the core by gravity in the event of a loss of power. The instrumentation and control systems provide a series of alarms, interlocks and reactor trips preventing the occurrence of operating situations that are outside the bounds of the normal operating procedures. No control or safety system is required to maintain a safe shutdown condition.

3.2 Meteorological Damage

Storm surges and seiches do not occur in Alachua County. Hurricane force winds and tornadoes have a relatively low probability of occurrence in Alachua County and since the UFTR is a self-protected and isolated low-power system with a low fission-product inventory, no further criteria were established for the UFTR structure.

3.3 Water Damage

From accumulated experience at the UFTR site, it has been established that no flooding conditions will exist within the Reactor Cell from an accumulated precipitation of 8” of rainfall in a 24-hour period. In the unlikely event that the National Weather Service gives a significant probability of a hurricane or other severe storm to produce an accumulated rainfall of more than 8 inches of rain in a 24-hour period, UFTR personnel will proceed according to an approved procedure for addressing potential (or actual) flooding conditions.

3.4 Seismic Damage

As stated in Chapter 2, Florida is a relatively inactive area for seismic activity and therefore no criteria for earthquakes have been established for the UFTR structure.

3.5 Systems and Components

The UFTR does not have structures, components, or systems that are safety-related or important-to-safety in the same context as nuclear power plants. For the UFTR, a failure of the protection system or credible event does not have the potential for causing off-site exposures greater than the normal exposure limits of 10 CFR Part 20. However, the UFTR structure was designed to withstand natural phenomena as previously discussed.

CHAPTER 4

REACTOR DESCRIPTION

Chapter 4 – Valid Pages

i	Rev. 0 11/30/2016
ii	Rev. 0 11/30/2016
4-1	Rev. 0 11/30/2016
4-2	Rev. 0 11/30/2016
4-3	Rev. 0 11/30/2016
4-4	Rev. 0 11/30/2016
4-5	Rev. 0 11/30/2016
4-6	Rev. 0 11/30/2016
4-7	Rev. 0 11/30/2016
4-8	Rev. 0 11/30/2016
4-9	Rev. 0 11/30/2016
4-10	Rev. 0 11/30/2016
4-11	Rev. 0 11/30/2016
4-12	Rev. 0 11/30/2016
4-13	Rev. 0 11/30/2016
4-14	Rev. 0 11/30/2016
4-15	Rev. 0 11/30/2016
4-16	Rev. 0 11/30/2016
4-17	Rev. 0 11/30/2016
4-18	Rev. 0 11/30/2016
4-19	Rev. 0 11/30/2016
4-20	Rev. 0 11/30/2016
4-21	Rev. 0 11/30/2016
4-22	Rev. 0 11/30/2016
4-23	Rev. 0 11/30/2016
4-24	Rev. 0 11/30/2016
4-25	Rev. 0 11/30/2016
4-26	Rev. 0 11/30/2016
4-27	Rev. 0 11/30/2016
4-28	Rev. 0 11/30/2016
4-29	Rev. 0 11/30/2016
4-30	Rev. 0 11/30/2016
4-31	Rev. 0 11/30/2016
4-32	Rev. 0 11/30/2016
4-33	Rev. 0 11/30/2016

TABLE OF CONTENTS

4.0 REACTOR DESCRIPTION

4.1 Summary Description

4.1.1 General Reactor System

The UFTR is a general type Argonaut research and training reactor that has been operational since May 1959. The UFTR converted to use of low enriched uranium fuel (LEU) in 2006.

The UFTR is heterogeneous in design and uses 19.75 weight-percent enriched uranium-aluminum fuel elements. The UFTR is licensed for operation up to a thermal steady state power of 100 kW. Water is used as both a coolant and a moderator. Graphite blocks surround the boxes containing the fuel and water moderator and serve as an additional moderator and a reflector. The fuel is contained in Material Test Reactor (MTR) type plates assembled in bundles. A typical bundle is composed of 14 fuel plates, each of which is a sandwich of aluminum clad over an U_3Si_2-Al alloy "meat". There are six fuel boxes in the core, each of which can contain four bundles, allowing a maximum core loading of 24 fuel bundles. Following the conversion to LEU, the UFTR core has been loaded with 22 fuel bundles and 2 dummy bundles.

Cutaway longitudinal and transverse sectional views of the UFTR that include shielding are shown in Figures 4.1 and 4.2. A horizontal cross-section of the UFTR at the beam tube level is shown in Figure 4.3. An isometric projection of the UFTR with no shielding is shown in Figure 4.4. These four figures are provided to show the general reactor design and the diverse experimental applications available at the UFTR. An isometric diagram of UFTR components including the control blade drive system, control blade shrouds, overall fuel box arrangement with covers, deflectors and shield plugs, coolant lines, graphite stringers, and shield test tank is presented in Figure 4.5.

The reactor is equipped with four control blades of the swing-arm type. Each blade is aluminum with a cadmium tip and is protected by magnesium shrouds. The control blades operate by moving in a vertical arc within the spaces between fuel boxes. The blades are moved in and out by mechanical drives. The drives, which are connected to the blades by means of long shafts, are located outside the reactor shield for accessibility. The drives may also be disconnected by means of electromagnetic clutches and allowed to fall by gravity into the reactor.

The nuclear design of the core ensures that the combined response of all reactivity coefficients during an increase in reactor power yields a significant decrease in reactivity. This inherently safe design results in a negligible risk, low power, training and research reactor that is well-suited for university use.

Figure 4.1 Longitudinal Section Diagram of the UFTR

Figure 4.2 Transverse Cross-Section through the UFTR Core Center

Figure 4.3 Horizontal Cross-Sectional Diagram of the UFTR at Beam Tube Level

Figure 4.4 Isometric Sketch of the UFTR with Shielding Removed

Figure 4.5 Isometric Diagram of UFTR Components

4.1.2 Design and Performance Characteristics

Previous analyses at research reactors define a limiting core configuration (LCC) which yields the highest power density for the specified fuel or loading pattern. Different core configurations, including experiments, are then allowed provided that they are within the envelope of the limiting case. For the UFTR, the LCC is the one loaded with 22 fuel bundles and two dummy bundles because the power density in the fueled elements at full-power would be at their highest.

Tables 4-1, 4-2 and 4-3 provide a summary of the key design, neutronic, and thermal hydraulic parameters described in this Chapter. Additionally, a summary of the reactor physics parameters for the 24 fuel bundle core is also presented in Table 4-3 for informational purposes only.

Table 4-1 Summary of Nominal Design Parameters of the 22 Fuel Bundle Core

DESIGN DATA	22 Bundles
Fuel Type	U_3Si_2-Al
Fuel Density	5.55 g/cc
Fuel Meat Size	
Width (cm)	5.96
Thickness (cm)	0.051
Height (cm)	60.0
Fuel Plate Size	
Width (cm)	7.23
Thickness (cm)	0.127
Height (cm)	65.1
Cladding	6061 Al
Cladding Thickness (cm)	0.038
Fuel Enrichment (nominal wt%)	19.75%
"Meat" Composition (wt% U)	62.98
Mass of ^{235}U per Plate (nominal)	12.5 g
Number of Plates per Full Fuel Bundle	14
Mass of ^{235}U per Full Fuel Bundle (nominal)	
Number of Full Fuel Bundles (current/expected)	22
Number of Partial Fuel Bundles	0
Number of Dummy Bundles	2

Table 4-2 Summary of Nominal Thermal-Hydraulic Parameters at 100kW

Max. Fuel Temperature (^{o}C)	73.6
Max. Clad Temperature (^{o}C)	73.5
Max. Coolant Channel Outlet Temp., (^{o}C)	71.5
Minimum ONBR	1.540
Minimum DNBR	463

Table 4-3 Summary Reactor Physics Parameters

REACTOR PARAMETERS	22 Bundles	24 Bundles
Fresh Core Excess Reactivity (pcm)	539 ± 59	3,105 ± 15
Shutdown Margin: (pcm)		
BOL	3,503 ± 21	823 ± 21
EOL	3,862 ± 21	3,883 ± 21
Control Blade Worth, (pcm)		
Regulating		
BOL	773 ± 21	836 ± 21
EOL	775 ± 21	831 ± 21
Safety 1		
BOL	1,414 ± 21	1,539 ± 21
EOL	1,405 ± 21	1,534 ± 21
Safety 2		
BOL	1,793 ± 21	1,531 ± 21
EOL	1,762 ± 21	1,505 ± 21
Safety 3		
BOL	1,841 ± 21	1,539 ± 21
EOL	1,764 ± 21	1,527 ± 21
Coolant Void Coefficient, (pcm/%void)		
BOL *(0 to 5% void)*	-125 ± 4	-131 ± 4
EOL *(0 to 5% void)*	-94 ± 4	-94 ± 4
Coolant Temp. Coefficient, (pcm/^{o}C)		
BOL	-6.7 ± 0.3	-6.7 ± 0.3
EOL	-4.8 ± 0.3	-4.8 ± 0.3
Fuel Temp. Coefficient, (pcm/^{o}C)		
BOL *(21 to 127°C)*	-1.9 ± 0.2	-1.7 ± 0.2
EOL *(21 to 127°C)*	-1.7 ± 0.2	-1.6 ± 0.2
Effective Delayed Neutron Fraction, (pcm)		
BOL	741 ± 10	737 ± 10
EOL	739 ± 10	732 ± 10
Neutron Lifetime (μs)		
BOL	198.5 ± 0.1	192.4 ± 0.1
EOL	203.4 ± 0.1	206.3 ± 0.1

4.2 Reactor Core

4.2.1 Reactor Fuel

The aluminum-silicide fuel has been approved by the NRC for use in non-power reactors. The masses of the fuel matrix, impurities in the silicide, and impurities in Al are given in NUREG-1313 (Ref. 4.1). The properties of the fuel are described in Table 4-1.

4.2.1.1 Fuel Plate Description

The fuel meat consists of U_3Si_2-aluminum dispersion fuel with 19.75 wt. % enriched uranium. The dimensions are described in Table 4-1.

4.2.1.2 Fuel Bundle Description

Each full fuel bundle contains 14 fuel plates with a nominal overall width of 5.74 cm and a nominal water gap of 0.282 cm between the plates. A diagram showing a top down overview of a fuel assembly is shown in Figure 4.6.

Figure 4.6 Diagram of a UFTR Fuel Assembly

The ends of the plates are separated by aluminum spacers and are bolted together. Aluminum spacers are welded onto the edges of the plates at about half their height. To eliminate variations in water channel spacing, aluminum "combs" are installed to physically separate the fuel plates at the nominal quarter-points locations along the fuel plate length. The tolerance on the minimum water channel spacing is a maximum of ± 20 mils. The nominal water channel spacing at the bolted ends of the fuel assembly on the manufacturing drawings is 110 – 112 mils, giving a minimum water channel spacing of 90 mils.

4.2.1.3 Fuel Box Description

In the UFTR, fuel is loaded into six "fuel boxes," each containing up to four fuel assemblies. The arrangement of four fuel assemblies inside a fuel box is shown in Figure 4.7.

Figure 4.7 Arrangements of the Fuel Assemblies in a Fuel Box

The fuel box design uses two wedge pins to position the fuel assemblies in each fuel box, as shown in Figure 4.7. The two-pin configuration with the smallest assemblies in the largest box produces two wide East-West channels of width 0.3255" (8.27mm) and a 0.435" (11.05mm) central North-South channel.

Table 4-4 provides dimensions of a fuel box and Figure 4.8 provides a schematic of their locations in the core. These dimensions are based on the current fuel size. The fuel region is vertically centered in the fuel box.

Table 4-4 Fuel Box Dimensions

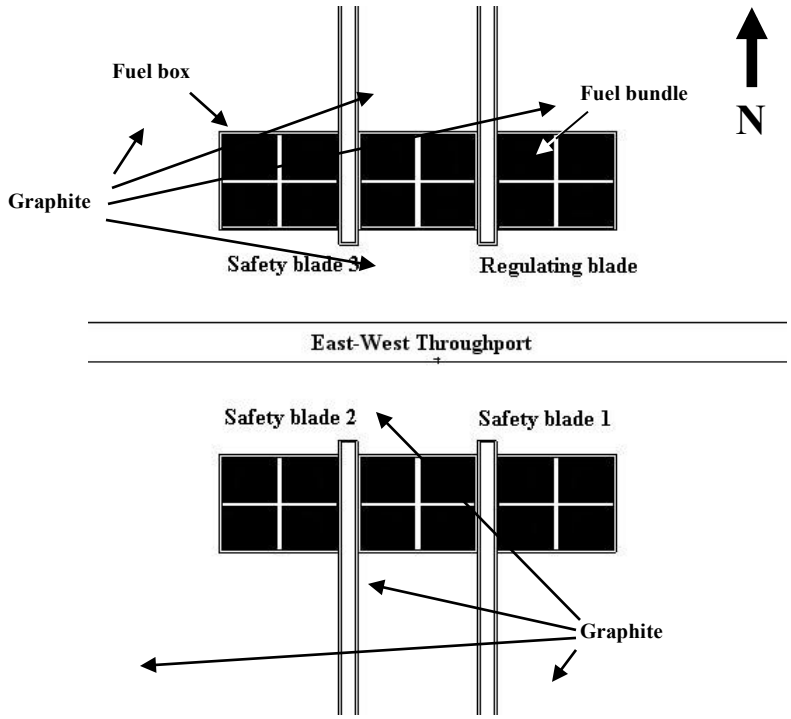

Figure 4.8 Schematic Horizontal Cut of the UFTR

The water level is at approximately 5.08 cm below the top of the fuel box, i.e., at half the outlet pipe (Ref. 4.11). This is confirmed by measurement of the water column height in the reactor building (measured at an average of 45.5" or 115.57cm).

4.2.2 Control Blades

The blades are of the swing-arm type consisting of four cadmium vanes protected by magnesium shrouds; they operate by moving in a vertical arc within the spaces between the fuel boxes. The shroud is made of magnesium and the blades are made of aluminum tipped with cadmium.

The control blade drive system consists of a motor that operates through a reduction gear train, and an electrically energized magnetic clutch that transmits a motor torque through the control blade shaft, allowing motion of the control blades. The basic control blade drive system is illustrated in Figure 4.9.

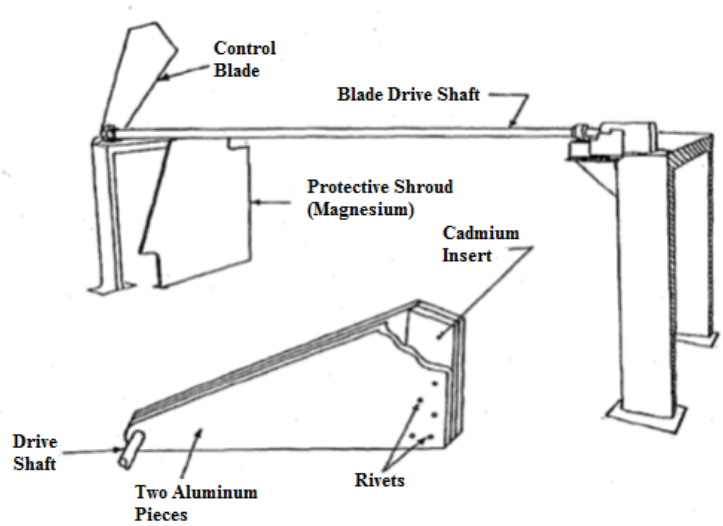

Figure 4.9 UFTR Control Blades and Drive System

The blades are sustained in a raised position by means of the motor, acting through the electromagnetic clutch. Interruption of the magnet current results in a decoupling of the motor drive from the blade drive shaft, causing the blades to fall back into the core. Figure 4.10 illustrates the control blades and their operations within the core.

Figure 4.10 UFTR Core Sketch Showing Operation of the Control Blades

4.2.3 Neutron Moderator and Reflector

The UFTR uses nuclear-grade graphite and water as its moderator and reflector.

4.2.4 Neutron Sources

The regenerable 25 Ci antimony-beryllium (SbBe) neutron source provides sufficient source neutron counts when charged by reactor operation. There is also a removable 1 Ci PuBe source available for use as needed.

The SbBe source is typically installed in the South vertical port. The PuBe source is inserted as needed in the center vertical port (typically).

4.2.5 Core Support Structure

The majority of the UFTR support and other structures are made of aluminum or concrete. The mechanical and nuclear properties of these materials will continue to be adequate for operating conditions since the neutron flux level and temperatures in the core are very low when compared to a nuclear power reactor.

4.3 Reactor Shield Test Tank

A shield water test tank is placed against the west face of the reactor and is shielded on the outer sides by concrete. This 5 ft. by 5 ft. x 14 ft. high shield tank provides biological shielding and can be used for experiments or for the irradiation of large objects (see figures 4.1 through 4.4).

4.4 Biological Shielding

The biological shielding around the UFTR minimizes the exposure to any individual working with the reactor to levels as low as reasonably achievable (ALARA) and to limits specified by 10 CFR 20. The biological shielding consists of the shield test tank and cast-in-place concrete with sections of barytes concrete carefully located to reduce the overall shield thickness while assuring its effectiveness. The concrete shielding consists of the following:

6 ft. cast-in-place barytes concrete found at the center sides.
6 ft. 9 in. cast-in-place barytes concrete at the end sides; in the middle are barytes concrete blocks.
5 ft. 10 in. barytes concrete blocks at the top.
3 ft. 4 in. barytes concrete blocks at the end.

The ends and top of the reactor is accessed by removing the ordinary concrete blocks cast to the openings. These blocks, weighing up to 4,500 lbs. each, have pick-up plugs so that they may be handled by means of an overhead bridge crane. The arrangement of these movable blocks is illustrated in the section views of the UFTR shown in Figures 4-1 through 4-3.

4.5 Nuclear Design

4.5.1 UFTR Computational Model

In order to analyze the core, a detailed computational model was developed and benchmarked against measured data. These calculations utilized the MCNP6 (Ref. 4.2) Monte Carlo codes with the ENDF/B-VII continuous energy cross-section library (when these cross-sections are available, otherwise the latest cross-section library is used). The MCNP6 package (Ref. 4.2) was used for fuel depletion calculations.

This section provides information on the material composition (fresh and depleted fuel) of the core, discusses the MCNP6 model developed for these analyses, and the benchmark calculations for the core.

4.5.1.1 Material Composition

The reactor core was modeled at two different states: beginning-of-life (BOL, fresh fuel) and end-of-life (EOL, depleted fuel with no excess reactivity).

The U_3Si_2-Al fuel composition at BOL was obtained by averaging six sets of concentrations obtained from the manufacturer BWXT (Ref. 4.3). The fuel matrix aluminum alloy and aluminum cladding compositions were obtained from the same package. Further, it is important to note that in case the impurity concentration is not exact, but bounded, the maximum value is used.

The depletion calculations used to model the current core were performed using the MCNP6 package, which tracks a large number of fission products and the buildup of plutonium. However, it is only necessary to obtain the concentrations of the most important fission products, i.e., those that have the most effect on the reactivity of the core. The fission products were selected based on their poisoning ratio, i.e., the ratio of neutrons absorbed by the fission product to the neutrons absorbed by fuel. Consequently, in addition to the various uranium and plutonium isotopes, the highly neutron-absorbing fission products were considered for use in the EOL analysis of the UFTR. Table 4-5 presents the selected isotopes.

Table 4-5 Selected Isotopes Considered for Criticality Calculation

Element	Isotope
Uranium	234, 235, 236, 238
Plutonium	239, 240, 241
Iodine	129, 131
Xenon	131, 133, 135
Samarium	149, 151
Promethium	147
Technetium	99
Neodymium	143, 145
Rhodium	103

To perform the required depletion calculations for the core, the BURN function in MCNP6 is used. The core is modeled at the licensed steady-state power limit of 100kW in different time steps until k_{eff} is within three standard deviations (±15 pcm) of a critical state (k_{eff}=1), or in other words, until there is little to no excess reactivity left. The depleted 22 bundle core is evaluated after approximately 30 days at 100 kW.

Other materials used in the core are aluminum for fuel clad and other structures, graphite for moderator and reflector, cadmium tips for the control blades, and magnesium for the control blade shrouds. Table 4-6 presents the properties of these various materials.

Table 4-6 Other Materials Characteristics for the UFTR Core

Material	Composition	Density
Aluminum - cladding	See Table 4-8	2.70 g/cc
Aluminum - other structures	Al + 10 ppm of natural boron	2.70 g/cc
Graphite -nuclear-grade	C + 5 ppm of natural boron	1.60 g/cc
Cadmium (abundance in %) - natural cadmium	106Cd (1.25) 108Cd (0.89) 110Cd (12.49) 111Cd (12.80) 112Cd (24.13) 113Cd (12.22) 114Cd (28.73) 116Cd (7.49)	8.75 g/cc
Magnesium	Mg	1.74 g/cc

The 10 ppm of natural boron in the aluminum cladding and structure material correspond to the best estimate of the impact of the impurities. The 5 ppm of natural boron-equivalent in the graphite corresponds to a best estimate of the impurities based on INL chemical analysis (Ref. 4.4) of several graphite samples. The isotopic concentrations of the fuel cladding are described in Ref. 4.1.

4.5.1.2 MCNP Model

Detailed MCNP6 models are developed for the core. The models represent the reactor core, the moderator, and the reflector regions. MCNP6 capabilities allowed modeling of the geometry described in Section 4.2. Figures 4.11 and 4.12 show the fuel box dimensions and the arrangement (as modeled) of the bundles inside the fuel boxes. The control blades are tipped with cadmium inserts. The cadmium tip of the Regulating Blade is smaller in size than the tips of the other control blades. Magnesium shrouds protect the blades. Figure 4.13 illustrates the location of the magnesium shrouds within the UFTR core.

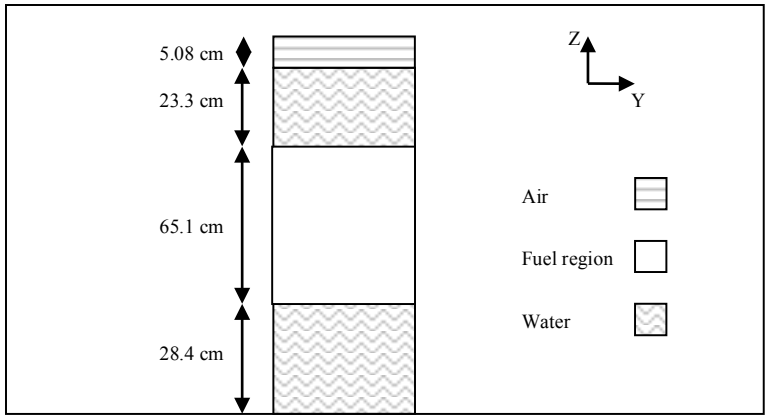

Figure 4.11 YZ Cut of a Fuel Box

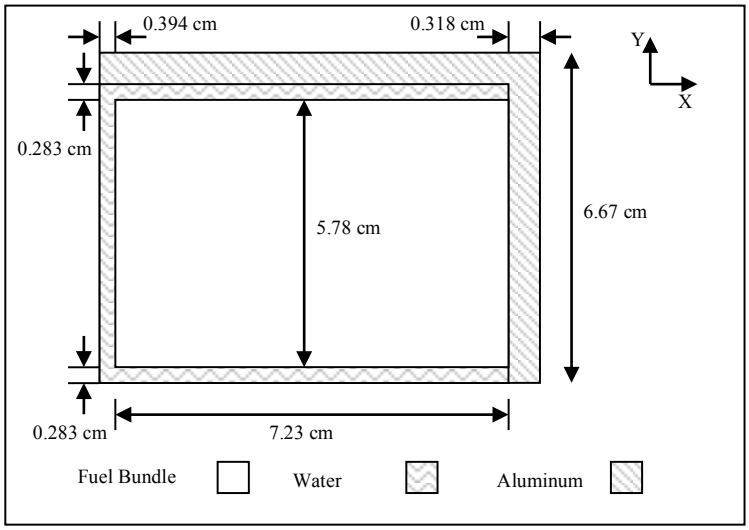

Figure 4.12 XY Cut of One Quarter of a Fuel Box

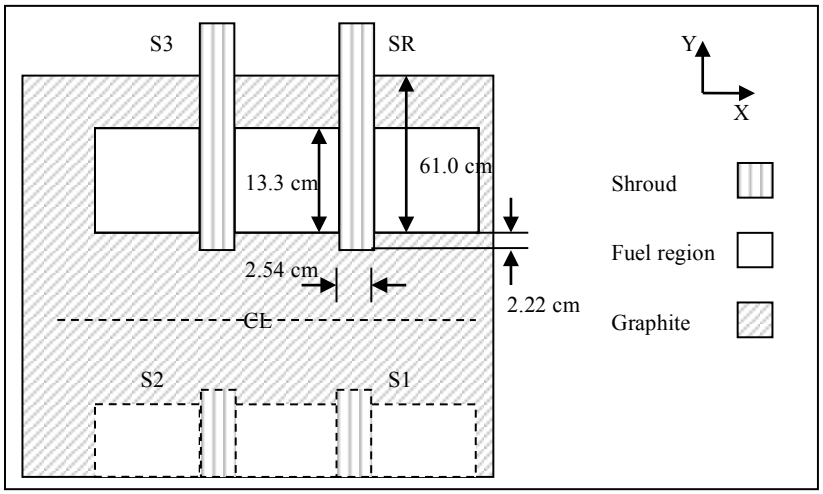

Figure 4.13 Location of Control Blade Shrouds

The blades have a fully-inserted nominal position of 2.5 degrees above the XY center plane and are moved out of the core by rotating them 45 degrees. The top of the shroud is located 10 cm above the top of the fuel box. Figure 4.14 shows the fully inserted and fully withdrawn locations of the control blade with respect to one of the shrouds and the centerline of the core; Figure 4.15 shows the dimensions of the blades (Ref. 4.12); and Figure 4.16 shows dimensions of the cadmium insert (Ref. 4.13).

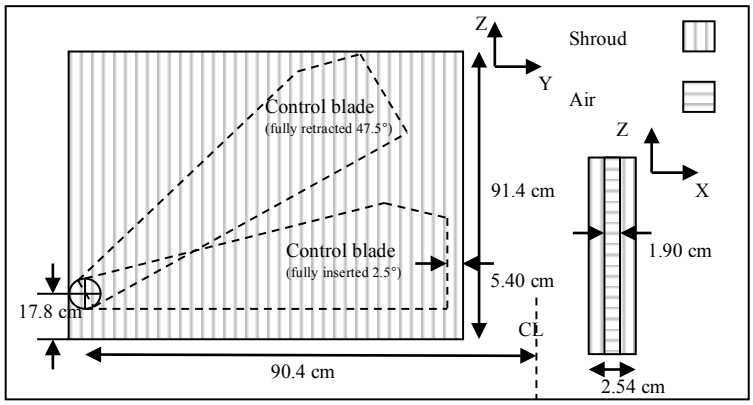

Figure 4.14 XZ and YZ Cut of a Magnesium Shroud

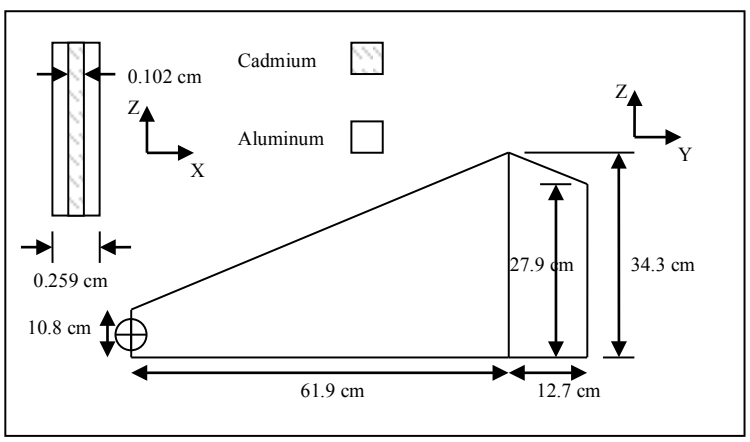

Figure 4.15 Control Blade Dimensions

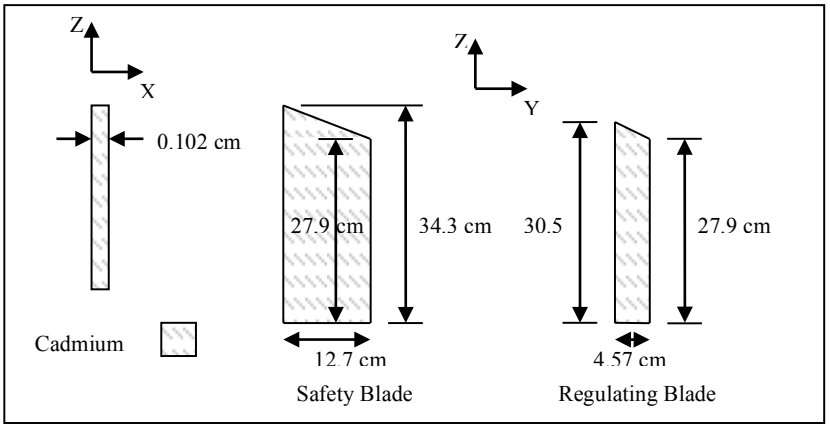

Figure 4.16 Cadmium Absorber Insert Dimensions

The UFTR uses nuclear-grade graphite and water as its moderator and reflector. Figure 4.17 shows the different reflector regions and their arrangement in the core. Figure 4.18 provides a set of schematic illustrations representing the UFTR MCNP model.

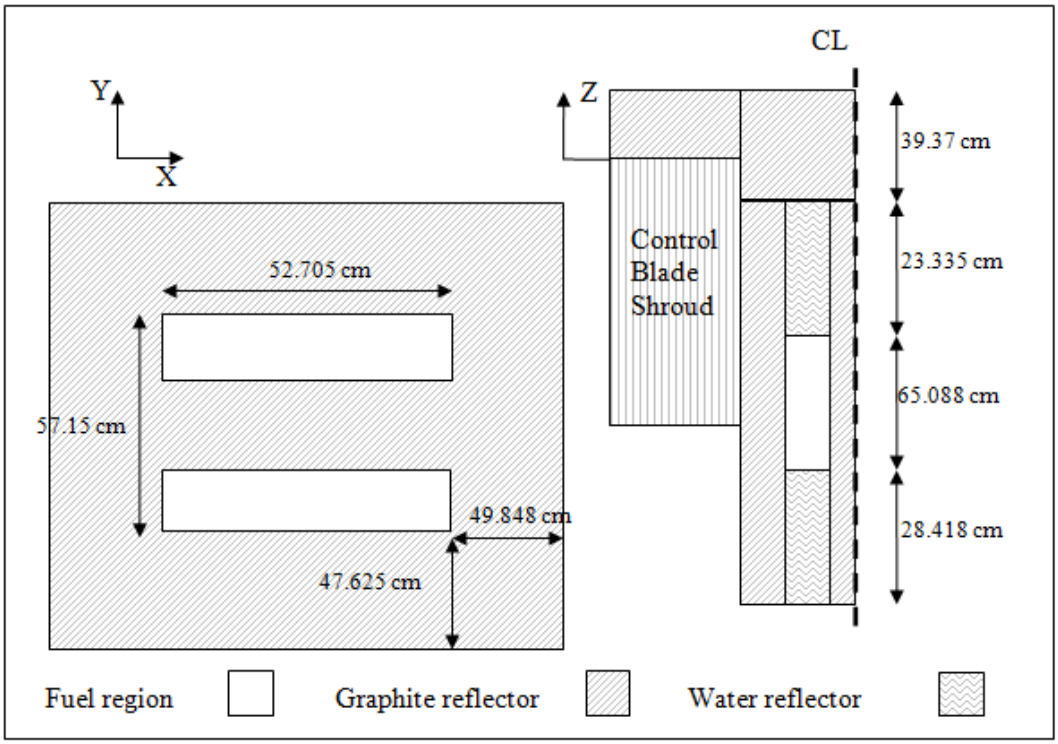

Figure 4.17 UFTR Reflector Regions

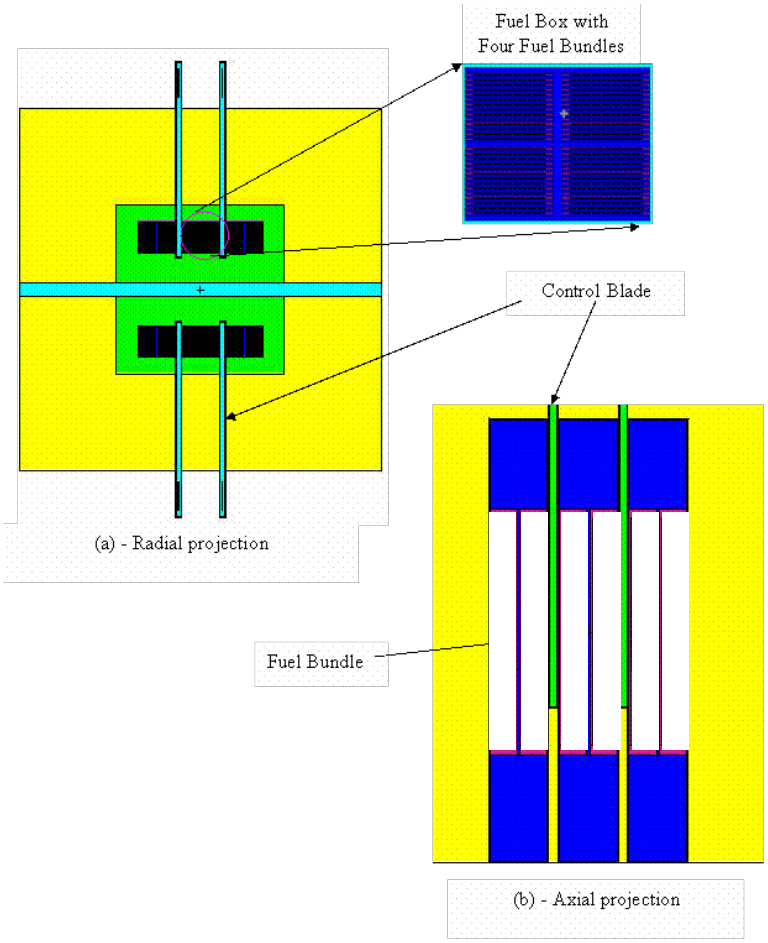

Figure 4.18 Schematic of the UFTR MCNP6 Model

4.5.2 Calculated Core Parameters

As mentioned in Section 4.2.1, each full fuel bundle contains 14 fuel plates. The two dummy bundles contain 14 dummy plates each. Figure 4.19 shows the pattern of the fuel and dummy bundles for the 22-bundle core or LCC. The two dummy bundles are located in the north-east and south-east corners (positions 6-4 and 3-2, respectively).

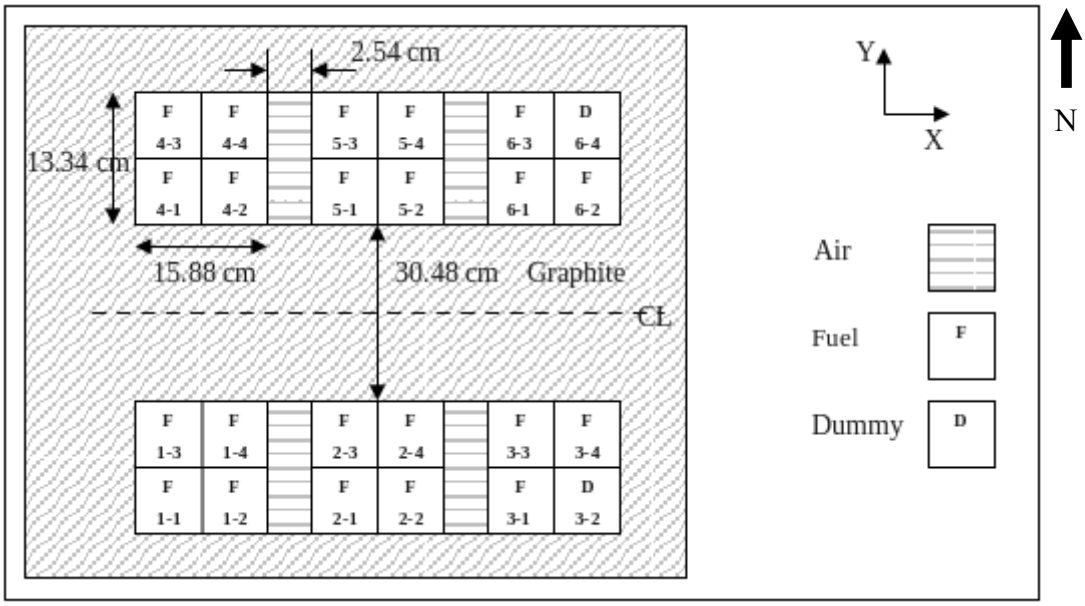

Figure 4.19 Fuel Pattern in the LCC

Control blade positions needed for a critical core were calculated by performing criticality calculations with the MCNP6 model. Table 4-7 shows the critical positions of the control blades for the core.

Table 4-7 Critical Blade Positions for the LCC

Control Blade	Position (Degrees from Horizontal)
Control Blade 1 (SE)	33.125
Control Blade 2 (SW)	33.125
Control Blade 3 (NW)	33.125
Regulating Blade (NE)	25.0

4.5.2.1 Cold Clean Excess Reactivity

For the 22-bundle BOL core, the difference in integral blade worths between the blades fully withdrawn and the blades at the critical position were used to calculate the excess reactivity value provided in Table 4-3. This method allows for a more direct comparison with measured values. The 22-bundle BOL core excess reactivity is predicted by MCNP to be 539 ± 59 pcm.

For the 24-bundle core, the excess reactivity provided in Table 4-3 was calculated directly with all blades fully withdrawn since the value is for informational purposes only and comparison with measured values is not possible.

4.5.2.2 Shutdown Margin

Shutdown Margin is the instantaneous amount of reactivity by which the reactor is subcritical or would be subcritical from its present condition assuming all control blades are fully inserted except for the single control blade of highest reactivity worth, which is assumed to be fully withdrawn.

Control Blade 3 is the most reactive. As such, the shutdown margin is calculated by fully inserting Control Blades 1 and 2 and the Regulating Blade, while fully withdrawing Control Blade 3. 8 compares the shutdown margins of the BOL and EOL cores.

Table 4-8 Shutdown Margin

	BOL	EOL
Shutdown Margin (pcm)	-3,503 ± 21	-3,862 ± 21

4.5.2.3 Reactivity Coefficients and Kinetic Parameters

Reactivity coefficients and neutron kinetics parameters were calculated for the fresh and depleted cores. These provide a measure of the core reactivity response to changes in the water properties or fuel temperature under both normal (e.g., normal changes to inlet coolant conditions) and off-normal conditions (e.g., inadvertent reactivity insertion events). The UFTR is designed so that reactivity coefficients associated the fuel temperature, primary coolant temperature, and primary coolant void coefficients are negative.

The reactivity coefficients are used to estimate the core reactivity change due to a change in some state property value. For the UFTR, reactivity coefficients were calculated for perturbations to the water temperature, water density (coolant void), and fuel temperature. The ranges on coolant voiding and temperature selected here cover expected transients that will occur during normal operations. In Chapter 13, the full sets of data are fitted with regression curves, and the equations are used (when necessary) as inputs to the excess reactivity insertion analysis. Core eigenvalue calculations were performed with the MCNP6 code using the same model that was used to evaluate the steady-state neutron flux distribution, excess reactivity, and control blade reactivity worth.

The kinetics parameters evaluated for the UFTR were the effective delayed neutron fraction, β_{eff}, and the prompt neutron generation time, l. Both the delayed neutron fraction and generation time can be calculated using the KOPTS function in MCNP6.

Table 4-9 provides the reactivity coefficients and kinetics parameters calculated for the BOL & EOL core. The calculations were performed for the fresh and depleted cores. The control blades were positioned to achieve a critical condition during these calculations.

Table 4-9 Kinetics Parameters and Reactivity Coefficients

Parameter		BOL			EOL		
β_{eff} (pcm)		741	±	10	739	±	10
l^* (μs)		198.5	±	0.1	203.4	±	0.1
α_{void} (pcm/%void)	(0 to 5% void)	-125	±	4	-94	±	4
	(5 to 10% void)	-140	±	4	-106	±	4
α_{water} (pcm/^{o}C)	(21 to 99°C)	-6.7	±	0.3	-4.8	±	0.3
α_{fuel} (pcm/^{o}C)	(21 to 127°C)	-1.9	±	0.2	-1.7	±	0.2
	(21 to 227°C)	-1.7	±	0.1	-1.6	±	0.1

4.5.2.4 Integral Control Blade Worth

For the 22 bundle BOL core, the integral worth of each control blade was calculated by fully withdrawing the blade of interest and positioning the others to obtain a critical system, then dropping the blade of interest and comparing the resulting k_{effs}. This method allows comparison to the experimentally determined integral worths measured since the HEU-LEU conversion. For the 22 bundle EOL and 24 bundle cores (provided in Table 4-3), the reactivity worth of each control blade was calculated between the case where all blades are fully withdrawn and the case where the given blade is inserted. The reactivity worth was calculated by Equation 4-3.

$$\rho = \ln\left(\frac{k_f}{k_i}\right) \qquad \textbf{Equation 4-3}$$

Table 4-10 compares the worth of control blades as calculated for the fresh and depleted 22 bundle cores.

Table 4-10 Comparison of Control Blades Worths for the 22-Bundle Core

Control Blade	BOL (pcm)	EOL (pcm)
Regulating	773 ± 21	775 ± 21
Control 1	1,414 ± 21	1,405 ± 21
Control 2	1,793 ± 21	1,762 ± 21
Control 3	1,841 ± 21	1,764 ± 21

In addition to the calculations of the total reactivity worth for the UFTR control blades, an analysis of differential worth as a function of position was performed for the most reactive blade, Control Blade 3.

The rate of reactivity insertion resulting from continuous withdrawal of the highest worth blade was approximated by assuming a 100 second blade withdrawal time. As shown in Table 4-11, the highest rate of positive reactivity insertion from withdrawal of Control Blade 3 is 34.2 pcm/s. This reactivity insertion rate is small with respect to some events analyzed in the Chapter 13 insertion of excess reactivity analysis.

Table 4-11 Differential Worth of Control Blade 3 for the BOL 22 Bundle Core

Time (s)	Blade Position		Reactivity (pcm)	Reactivity Insertion Rate (pcm/s)
	Degrees	Units		
0.0	2.5	0	0	n/a
5.6	5	56	151	27.0
16.7	10	167	531	34.2
27.8	15	278	886	32.0
38.9	20	389	1219	30.0
50.0	25	500	1472	22.8
61.1	30	611	1648	15.9
72.2	35	722	1753	9.5
83.3	40	833	1789	3.2
100.0	47.5	1000	1841	3.1

4.5.2.5 Flux Distribution, Bundle Powers, and Peaking Factors

Table 4-12 compares the skewed power distribution in each fuel bundle of the LCC BOL core. The control blades were systematically repositioned in order to skew the reactor's flux in a way that generates the fuel bundle with the highest possible power. This bundle was then used in Chapter 13 accident analyses.

Table 4-12 Power Generated in Fuel for the Skewed 22 Fuel Bundle Core

Bundle	BOL [kW]	EOL [kW]	% Difference
1-1	4.25	4.13	2.85
1-2	4.77	4.62	3.41
1-3	4.66	4.56	1.98
1-4	5.24	5.12	2.22
2-1	4.95	4.78	3.82
2-2	4.71	4.56	3.69
2-3	**5.44**	5.32	2.25
2-4	5.19	5.09	2.11
3-1	3.94	3.83	3.19
3-2	0	0	-
3-3	4.27	4.2	1.72
3-4	3.77	3.73	1.27
4-1	4.55	4.56	-0.61
4-2	5.09	5.11	-0.92
4-3	4.12	4.12	-0.70
4-4	4.60	4.60	-0.81
5-1	5.24	5.30	-1.73
5-2	4.84	5.04	-4.57
5-3	4.73	4.77	-1.51
5-4	4.37	4.51	-3.79
6-1	3.95	4.16	-5.50
6-2	3.60	3.70	-3.20
6-3	3.63	3.78	-4.74
6-4	0	0	-

Power distributions were calculated axially per-bundle and radially across the core. Radial power distributions (F_Q) and axial power distributions (F_{dH}) were calculated as;

$$F_Q = \frac{P_i}{P_{core,average}}$$

$$F_{dH}(z) = \frac{P_i(z)}{P_{i,average}}$$

Axial power distributions at the most limiting core condition (skewed blades) for the hottest bundle and the core average is shown below. Radial power distribution (FQ) is shown below as well.

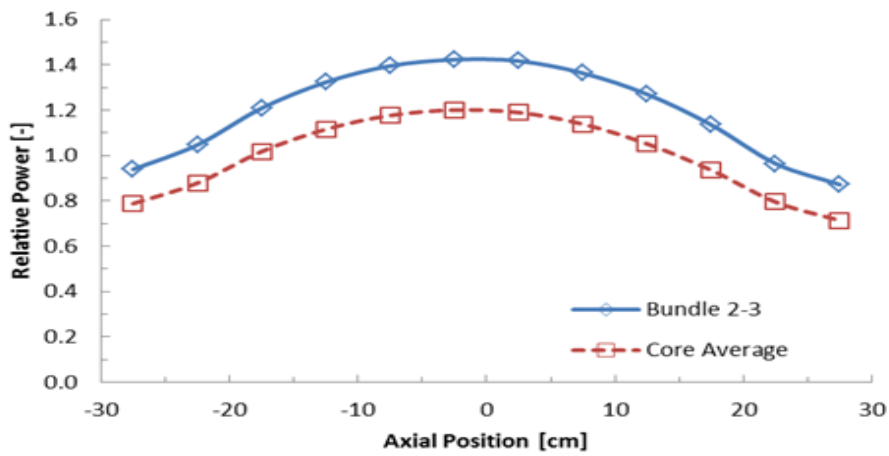

Figure 4.20 - Axial Power Profiles for Limiting Core Configuation

0.91	1.01	1.04	0.96	0.80	
1.00	1.12	1.154	1.07	0.87	0.79
1.03	1.15	1.198	1.14	0.94	0.83
0.94	1.05	1.09	1.04	0.87	

Figure 4.21 - Radial Power Peaking (F_Q) for Limiting Core Configuration

4.5.2.5 Burnup Effects on Power Distribution

To analyze the effect of burnup on the DNBR analysis, a depletion calculation using the existing MCNP model was performed. The analysis demonstrated the effect of fuel depletion on the radial and axial power distributions in the core. To perform the required depletion calculations for the core, the BURN function in MCNP6 was used. Each fuel bundle isotopic composition was tracked independently with a unique material number identifier. The core was modeled at the licensed steady-state power limit of 100kW in different time steps until k_{eff} is within three standard deviations (±15 pcm) of a critical state (k_{eff} =1), i.e., until there is little to no excess reactivity left.

The analysis for normal operation burn-up effects on the radial peaking factors for the UFTR show that, as expected, maximum radial peaking decreases as a function of burn-up and that the

most limiting condition is at BOL of the 22 bundle core with a skewed flux profile. Table 4-12 shows the effect of burnup on the power distribution of the core.

4.5.3 Comparison of Calculated and Measured Core Parameters

Measurements are taken annually of key reactivity parameters. These measurements can be used to benchmark the MCNP6 model and determine its accuracy. Table 4-13 compares the measured excess reactivity, shutdown margin, and integral control blade worths with those calculated. The calculated excess reactivity and shutdown margin values in Table 4-13 are directly derived from the calculated integral blade worths to allow for better comparison.

Table 4-13 Comparison of Measured vs. Calculated Core Parameters

	MCNP Calculated (pcm)	Measured at ~19,140 kW-hrs (pcm)	% Difference from Calculated	Measured at ~26,400 kW-hrs (pcm)	% Difference from Calculated
Excess Reactivity	539	590	9.5	600	11.3
Shutdown Margin	3441	3370	-2.1	3420	-0.6
Regulating Blade	773	800	3.5	800	3.5
Control 1	1414	1520	7.5	1520	7.5
Control 2	1793	1640	-8.5	1700	-5.2
Control 3	1841	1970	7.0	1970	7.0

The comparison shows good agreement between the measured and calculated values (for a typical LWR the maximum allowable reactivity anomaly is ± 1000 pcm).

4.6 Thermal-hydraulic Analyses

In this section, the PLTEMP/ANL code was used to determine the thermal-hydraulics parameters of the UFTR under steady-state full-power conditions for the core.

4.6.1 Fuel Assembly and Fuel Box Geometry

The axes displayed in Figure 4.21 represent the orientation of the elements in the reactor. The x-axis, y-axis, and z-axis are set along the east-west, north-south and bottom-top axes of the core, respectively. Figure 4.22 depicts the layout of the fuel plates and water gaps in a fuel bundle.

Figure 4.22 Fuel Plate Dimensions

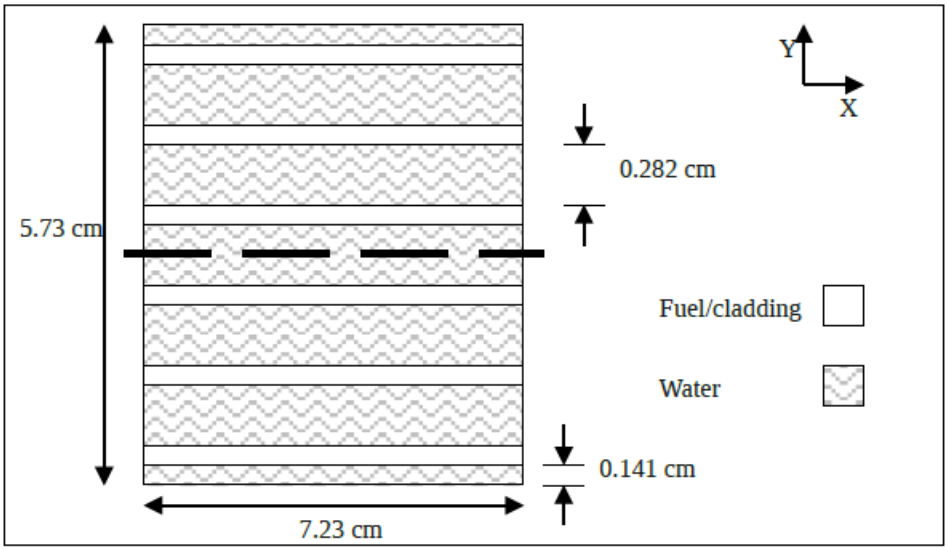

Figure 4.23 Fuel Bundle XY Cut

The thermal-hydraulic analyses used the limiting power density distribution for all four fuel assemblies and the interior volume of the fuel box in the PLTEMP/ANL V 4.2 code (Ref. 4.5). The limiting fuel box contained assemblies in locations 2-1, 2-2, 2-3, and 2-4 with the limiting fuel assembly in location 2-3. The relative power densities in each fuel plate were obtained from detailed MCNP6 criticality calculations. In the PLTEMP analysis, the relative axial power profile of the hottest fuel plate of the hottest fuel assembly was applied to all fuel plates.

Hot channel factors are used to account for dimensional variations inherent in the manufacturing process, as well as variations in other parameters that affect thermal-hydraulic performance. The dimensions that were used in the thermal-hydraulics models are shown in Table 4-14.

Table 4-14 Key Geometric Parameters Used in Thermal-Hydraulic Models

Model Geometric Parameter	Fuel Box	
	inches	mm
Fuel box interior depth	5.125	130.2
Fuel box interior width	6.125	155.6
Fuel plate thickness	0.050	1.27
Channel thickness against fuel box	0.3255	8.268
Central horizontal channel thickness	0.188	4.78
Vertical bypass gap thickness	0.435	11.0
Coolant channel thickness	0.111	2.82
Bolt head height	0.094	2.39

The grid plate, which supports the four fuel assemblies in each fuel box, is included in the hydraulic analysis because it makes the velocity distribution in each fuel box more uniform. The hydraulic model in the code assumes that the hydraulic resistance for each coolant path, from the bottom of the grid plate to the region above the fuel plates, has two components, a form, or k-loss, and a frictional loss. For each of these parallel paths or channels the pressure drop, ΔP, is given by $\Delta P = (K + fL/D) \times \rho V^2/2$, where K is the k-loss value, f is the friction factor for smooth-walled channels, L is the channel length, D is the channel hydraulic diameter, ρ is the coolant density, and V is the average coolant velocity in the channel. For laminar flow the value of f is affected by the shape of the channel.

The single value of K represents not only the form losses at the inlet and exit to the fuel plates, but also the hydraulic resistance due to the grid plate. The minimum total flow area in the grid plate is considerably smaller than the total flow area in the fuel region. Also, there are multiple parallel flow paths through each fuel box that were considered in this hydraulic analysis. For each path the flow passes first through the grid plate and then through the fuel assembly region. The value of 5 that was used in the analyses is a conservatively low value for the effective K-loss for each path. A larger value of K would result in larger margins to the limiting conditions, such as the onset of nucleate boiling, by causing the thinner channels to have more flow.

Since the ends of the side edges of the fuel plates are open where they abut the side channel, in theory there can be some flow between the fueled channels and the side channel through the center of the fuel box. However, in general, this lateral flow is expected to be small since the local pressure is expected to be essentially uniform at each axial level. The higher vertical flow velocities in the bigger channels, which have the larger hydraulic diameters, tend to keep the axial pressure drops through each of the parallel paths equal and the pressures uniform at each axial level. When the pressure is uniform at each axial level, there is no mechanism for redistribution of flow among adjacent open channels. Thus, any impact of any flow diversion should be small. Moreover, the hot channel factors include a 20% uncertainty in channel flow distribution as a random error.

4.6.2 PLTEMP/ANL v4.2 Code Description

Thermal-hydraulic analyses were performed using the computer code PLTEMP/ANL V 4.2 (Ref. 4.5). This code provides a steady-state thermal-hydraulics solution for research reactor fuel assemblies with plate-type or tube-type geometries. The code accounts for pressure drops axially in one dimension including any bypass flows, and accounts for thermal effects in two dimensions. The third dimension is along the width of the plate. Width effects such as heated area not being the same as wetted area are accounted for. The coolant channel hydraulic diameter, area, and friction factor are obtained assuming that the fuel plates are in contact with the sides of the fuel box, and the channel is the full width of the fuel plate. Friction factors and mass flow rates are determined through a network of parallel channels, some of which are not heated. Both laminar and turbulent flow regimes are accommodated by PLTEMP, although the UFTR operates in the laminar flow regime.

PLTEMP determines the friction factors and coolant mass flow rates in each channel, and then calculates the steady-state temperature distribution in the meat, clad, and coolant at each axial

node. The computational process begins at the inlet end of the channel, and proceeds level-by-level to the channel outlet.

The code accounts for one-sided heating of a channel, as occurs for the channel next to the fuel box. In laminar flow, the heat transfer coefficient is different for a channel heated on one side than for a channel heated on two sides. Also, the code accounts for pressure drop friction factors over the full Reynolds number range from laminar, through the critical zone, and on through turbulent flow.

Parameters such as the Onset of Nucleate Boiling Ratio (ONBR) and Departure from Nucleate Boiling Ratio (DNBR) are calculated along with fuel, clad, and coolant temperatures in each channel.

4.6.3 Thermal-Hydraulic Analysis Results

In this section, the PLTEMP/ANL code was used to determine the thermal-hydraulics parameters of the UFTR under nominal full-power conditions and at the conditions where the onset of nucleate boiling occurs. The true values of reactor power, flow, and inlet temperature at which the onset of nucleate boiling occurs are used to select the Limiting Safety System Settings (LSSSs). The steady state thermal hydraulic analysis assumes the BOL 22-bundle core (LCC) with skewed power profile. The analysis used the same conservative assumptions from the UFTR Conversion SAR section 4.7.3.2 (i.e. decrease in the water channel spacing of 20mils) and then added further conservatism due to incorporation of the skewed critical blade height assumption and the 22-bundle core (versus banked blade heights and 22-bundle with 10-plate partial bundle).

All hot channel factors are included in the calculations, except for uncertainties in measurements of the power level, coolant flow rate, and inlet temperature. For the core, the maximum fuel temperature and the maximum clad temperature occurred at a height of 57.5 cm from the bottom of the fuel meat.

The nominal operating conditions for the core are listed in Table 4-15.

Table 4-15 Nominal Operating Conditions for the UFTR Core

Nominal Condition	
Inlet Temperature (^{o}C)	27.5 (81 ^{o} F)
Inlet mass flow rate (gpm)	46
Power (kW)	100

Table 4-16 shows the thermal-hydraulics parameters of the LCC at nominal operating conditions.

Table 4-16 Thermal-hydraulics Parameters of the LCC at Nominal Operating Conditions

Parameter	
Max. Fuel Temperature (^{o}C)	73.6
Max. Clad Temperature (^{o}C)	73.5
Max. Coolant Channel, outlet temperature (^{o}C)	71.5
Min. ONBR	1.540
Min. DNBR	463

Under nominal full-power conditions, the minimum ratio for Onset of Nucleate Boiling is calculated to be 1.540 and the minimum ratio for Departure from Nucleate Boiling (DNB) is calculated to be 463.

4.6.3.1 Limiting Safety System Settings

The reactivity insertion analyses provided in SAR Chapter 13 demonstrate that automatic protective actions are not required for protection of the Safety Limit even for the hypothetical event that results in coolant boiling due to the self-limiting design and minimal decay heat generation. Therefore, the LSSSs for the UFTR were conservatively chosen to provide defense-in-depth by ensuring normal operation remains bounded by the normal thermal hydraulic analysis (i.e to keep ONBR >1).

Multiple PLTEMP cases were run to optimize the license renewal LSSS parameters for operating margin and human factoring for analog power indication (i.e. it's easier to identify analog indication of power exactly at 110% than at 119%). For the same true flow of 39 gpm used in the UFTR Conversion SAR (Ref. 4.10), this optimization results in a reduction of true power to 116 kW and an increase in true inlet temperature to 103.1F at an ONBR of 1.003. Therefore, the new proposed LSSS values are 110 kW, 102F, and 41 gpm (unchanged).

The operating conditions for the LCC at LSSS conditions are listed in Table 4-17.

Table 4-17 LSSS Operating Conditions for the UFTR Core

Nominal Condition	
Inlet Temperature (^{o}C)	39.5 (103.1 ^{o}F)
Inlet mass flow rate (gpm)	39
Power (kW)	100

Table 4-18 shows the thermal-hydraulics parameters of the LCC at LSSS operating conditions.

Table 4-18 Thermal-hydraulics Parameters of the LCC at LSSS Operating Conditions

Parameter	
Max. Fuel Temperature (^{o}C)	98.7
Max. Clad Temperature (^{o}C)	98.6
Max. Coolant Channel, outlet temperature (^{o}C)	96.3
Min. ONBR	1.003
Min. DNBR	280

References

4.1. USNRC, *Safety Evaluation Report Related to the Evaluation of Low-Enriched Uranium Silicide-Aluminum Dispersion Duel for Use in Non-Power Reactors*, NUREG-1313, July 1988.

4.2. X-5 Monte Carlo Team, *MCNP-A General Monte Carlo N-Particle Transport Code, Version 5 Volume I, II and III*, Los Alamos National Laboratory, Report LA-CP-03-0245, 2003.

4.3. Letter, Scott T. Fairburn, BWXT Nuclear Products Division Transmission Package to Alireza Haghighat, University of Florida, June 23, 2005

4.4. Letter, Meyer, Mitchell K., U.S. National Technical Lead for RERTR Fuel Development, INL Transmission Package to Alireza Haghighat, University of Florida, June 21, 2005.

4.5. A.P. Olson and Kalimullah, *A USERS GUIDE TO THE PLTEMP/ANL V4.2 CODE*, Reduced Enrichment for Research and Test Reactor (RERTR) Program, Argonne National Laboratory, Nuclear Engineering Division, July 7, 2015.

4.6. ORNL Monthly Progress Report, ORNL/ANS/INT-5/V19, Oak Ridge National Laboratory, October, 1989. This is also used by RELAP5/3D.

4.7. A. E. Bergles and W. M. Rohsenow, "The Determination of Forced-Convection Surface-Boiling Heat Transfers," *Trans. ASME, J. Heat Transfer*, vol. 86, p. 365, 1964.

4.8. D. C. Groeneveld et al., "Lookup Tables for Predicting CHF and Film-Boiling Heat Transfer: Past, Present, and Future," *Nuclear Technology, vol.* 152, p.87, Oct. 2005.

4.9. CD-adapco. CFD Solutions ,CFD Software, Fluid Dynamics, Computational Fluid Dynamics, STAR-CD V4. Retrieved July 27 2009. [http://www.cd-adapco.com/products/STAR-CD/index.html]

4.10. Haghighat, *Conversion from HEU to LEU Fuel Safety Analysis Report (CSAR)*, University of Florida, December 2005.

4.11 UFTR drawing #001-80-100.

4.12 UFTR drawings #021-80-100, #021-80-102 and #021-80-113.

4.13 UFTR drawings #89-31-121 and #89-31-118

CHAPTER 5

REACTOR COOLANT SYSTEMS

Chapter 5 – Valid Pages

i	Rev. 0	11/30/2016
ii	Rev. 0	11/30/2016
5-1	Rev. 0	11/30/2016
5-2	Rev. 0	11/30/2016
5-3	Rev. 0	11/30/2016
5-4	Rev. 0	11/30/2016

TABLE OF CONTENTS

LIST OF FIGURES

5 REACTOR COOLANT SYSTEMS

5.1 Summary Description

This chapter describes the UFTR cooling system and its various components. Demineralized light water is used in the UFTR to moderate fast neutrons and to maintain low coolant temperatures when it's operating at or near rated power for extended periods. During normal operation, this cooling is accomplished via forced convection through the open primary system with waste heat disposed to the environment via the secondary coolant system. Due to the simplicity of design and low power of the UFTR argonaut type reactor, this chapter is greatly simplified from what is required for a typical reactor.

5.2 Primary Coolant System

The reactor primary coolant water flow path originates from the coolant storage tank through the heat exchanger to the bottom of the fuel boxes, upward past the fuel assemblies to overflow pipes and into a header for return to the storage tank. Having the fuel boxes elevated above other major Reactor Coolant System components is a passive design feature that ensure events causing a loss of primary coolant flow result in the water moderator gravity draining from the fuel boxes shutting down the reactor. This is shown schematically in Figure 5-1.

The major components of the reactor coolant system include:

- Coolant Storage Tank - The primary coolant is stored in the coolant storage tank located in the equipment pit with a capacity of 200 gallons of water, approximately six (6) times the capacity of the reactor.

- Primary Coolant Pump - Rated at 65 gpm, the primary coolant pump located in the equipment pit draws suction from the coolant storage tank and circulates the water through the heat exchanger before delivering it up to the fuel boxes. Normal flow is about 46-48 gpm. Flow from the coolant storage tank is controlled by a ball valve in the pump discharge line.

- Heat Exchanger - The heat exchanger is a 316 stainless steel water-to-water tube and shell heat exchanger, one pass on shell side and 4 passes on primary side, located in the equipment pit, designated to circulate up to 250 gpm of secondary water through the shell side and up to approximately 75 gpm of reactor coolant water through the tube side for removal of up to 500 kW thermal. The tubes are seal welded to the tubesheet to minimize leakage.

- Dump Valve - The Dump Valve is a solenoid-operated valve located in the equipment pit that opens automatically when actuated by a demand or trip signal, allowing water in the fuel boxes to drain into the coolant storage tank. Prior to reactor operation, the dump valve is shut and the primary coolant pump is started to supply the necessary moderation and cooling for full-power reactor operation.

- Core Water Level Indicator – Core water level is indicated by sight glass. A level switch located with the sight glass is wired to the reactor protection system actuating a reactor trip when the water level in the core falls below the preset limit.

- Rupture Disk - A graphite rupture disk located in the equipment pit is designed to burst at approximately 2 psi above the normal operating system pressure. Should a pressure excursion occur, this diaphragm would rupture causing the water from the core to be drained into the equipment storage pit.

5.3 Secondary Coolant System

A schematic diagram of the secondary cooling system of the UFTR is shown in Figure 5-2. There are two sources of water for this secondary cooling system: the deep well used for most operations and the city water line used as a back-up system during operation above 1kW (thermal). The well water is pumped by a submersible, 10 horsepower pump.

The deep well is approximately 238 ft deep with a casing diameter of 3" with the static water level approximately 87 ft. below grade. The well pump has approximately 200 gpm pumping capacity for this arrangement. The well water flows through a basket strainer then into the shell side of the heat exchanger and subsequently into the storm sewer.

A flow-measuring instrument located on the input line for the heat exchanger monitors the secondary flow rate. At predetermined setpoints, dependent on the secondary water source and power level, warning signals and trips are transmitted to the control room.

Pressure of the secondary coolant system is maintained higher than the primary system to prevent contamination of secondary water, although secondary coolant is not required until 1 kW. The secondary coolant system is tested for radioactive contamination weekly according to written procedures.

5.4 Primary Coolant Cleanup System

The primary purification system loop is also shown in Figure 5-1. This loop is supplied with a separate pump allowing continuous purification flow. The flow of the primary coolant pump is sufficient to maintain a flow through the purification loop when it is in operation.

The purification system is arranged to provide the reactor with continuous monitoring of the resistivity of the primary water. Nuclear type resin (H-OH; pH control; AMBERLITE™ or equivalent) is used in the purification system demineralizer. An in-line resistivity bridge is set up to accept two conductivity cell signals – one upstream of the demineralizer and one downstream.

5.5 Primary Coolant Makeup Water System

Demineralized water is used as makeup to the primary coolant system and the shield tank through a hose connection. The makeup system consists of demineralizers, connected to the city water system, filled with H-OH nuclear type resin.

5.6 N-16 Shielding

Portions of the primary coolant system that are subject to coolant flow are located in the primary equipment pit or, in the case of the fuel boxes, in the center of the core shielding structure. For operation at 1 kW or above, concrete block shielding is added to the top of the equipment pit. Entry into the equipment pit is permitted no sooner than 15 minutes after shutdown from power operation to allow time for N-16 decay.

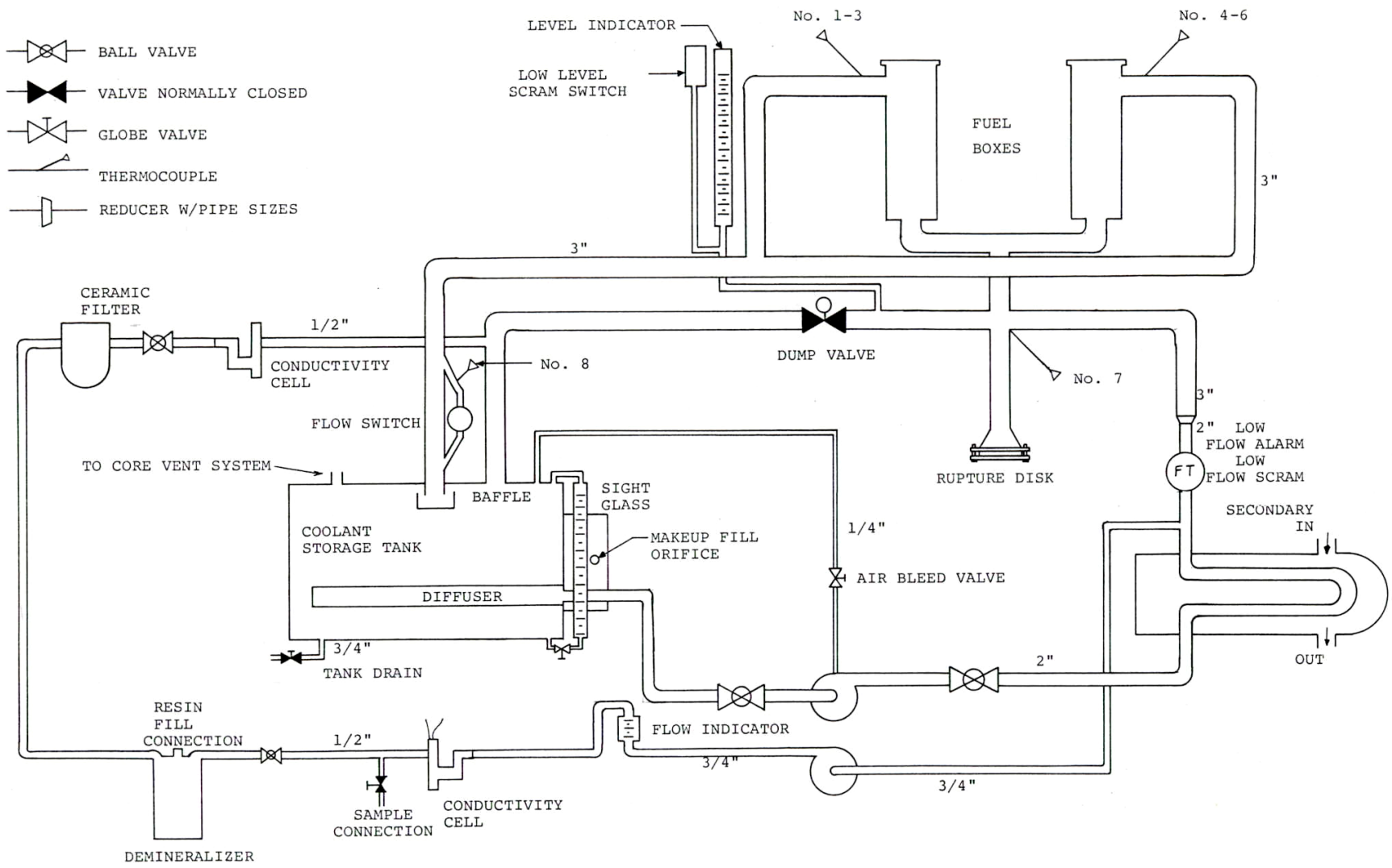

Figure 5-1 UFTR Primary Coolant Loop and Purification System.

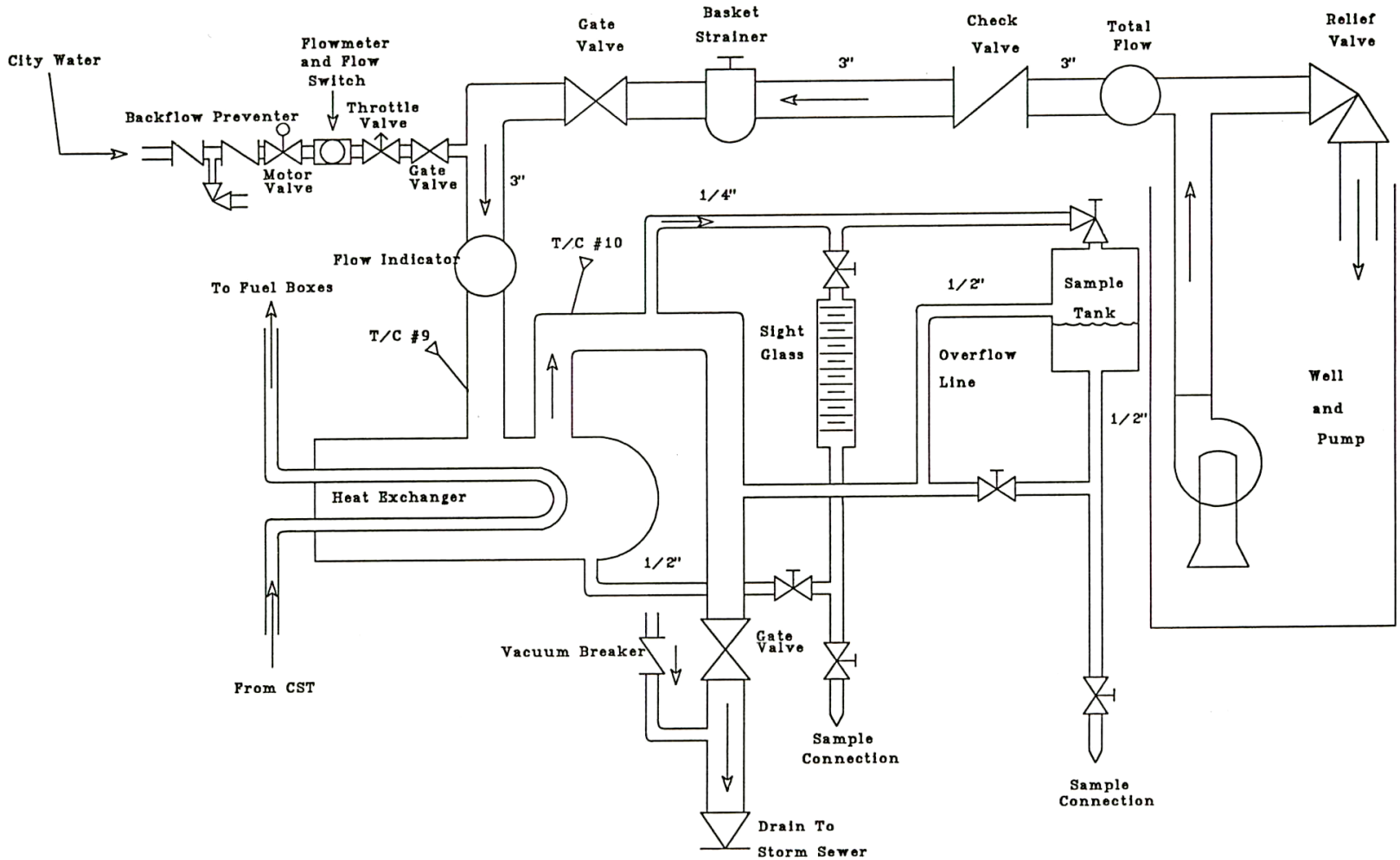

Figure 5-2 UFTR Secondary Water Cooling System

CHAPTER 6

ENGINEERED SAFETY FEATURES

(The UFTR does not have any credited Engineered Safety Features)

CHAPTER 7

INSTRUMENTATION AND CONTROL SYSTEMS

Chapter 7 – Valid Pages

i	Rev. 0	11/30/2016
ii	Rev. 0	11/30/2016
7-1	Rev. 0	11/30/2016
7-2	Rev. 0	11/30/2016
7-3	Rev. 0	11/30/2016
7-4	Rev. 0	11/30/2016
7-5	Rev. 0	11/30/2016
7-6	Rev. 0	11/30/2016
7-7	Rev. 0	11/30/2016
7-8	Rev. 0	11/30/2016

TABLE OF CONTENTS

LIST OF FIGURES

7 INSTRUMENTATION AND CONTROLS

Since the UFTR is a low power, self-limiting reactor, the instrumentation and associated controls are considerably simplified when compared to instrumentation and control systems of large power reactors. Many of the instrument outputs are shared between the systems.

The instrumentation and control (I&C) systems of the UFTR comprise the following subsystems:

- Reactor Control System (RCS);
- Reactor Protection System (RPS);
- Process Instrumentation; and
- Radiation Safety Monitoring Systems.

The system instruments are hardwired analog instrument type with the exception of portions of the temperature monitoring system that are of the digital system instrument type. Additionally, several data recorders have been replaced with digital data recorders.

7.1 Design of Instrumentation and Control Systems

Two channels of neutron instrumentation provide the UFTR with independent, separate indication of reactor power from the source level to 150% of the rated thermal power.

The RCS is composed of four control-blade drive systems, two nuclear instrumentation channels, one automatic control system, one interlock system and one monitoring system.

The RPS is composed of the Control-Blade Withdrawal Inhibit System, Safety Channel 1, Safety Channel 2, and monitored parameters. The monitored parameters are both nuclear and non-nuclear or process variables.

7.1.1 Design Criteria

The instrumentation and control system is designed to provide the following:

- information on the status of the reactor and reactor-related systems;
- means for manually withdrawing or inserting control rods;
- automatic control of reactor power level;
- automatic scrams in response to selected abnormal operating parameters or equipment parameters; and
- monitoring of radiation and airborne radioactivity levels.

7.1.2 Design-Basis Requirements

The primary design basis of the UFTR is the Safety Limit on fuel and cladding temperature.

Due to the inherently safe core design and low excess reactivity, postulated reactivity insertion event analyses in SAR Section 13.2 demonstrate that no automatic control or safety functions are needed to prevent reaching the Safety Limit. To provide defense-in-depth the fundamental reactor parameters of power, temperature, and flow were conservatively chosen for Limiting Safety System Settings to ensure MODE 1 operation remains bounded by the thermal hydraulic analysis described in SAR Chapter 4.

7.1.3 Systems Description

7.1.3.1 Reactor Power Measurements

The two channels of neutron instrumentation provide the UFTR with independent and separate monitoring of the reactor power level. Figure 7-1 shows the operating ranges of the detectors used to monitor UFTR power levels.

7.1.3.1.1 Reactor Power Channel 1

Reactor Power Channel 1 provides the operator with period and measured power from source level to 150% of rated thermal power. The signals are provided from two detectors, a B-10 proportional counter and a fission chamber.

The detectors are connected to circuitry containing a pre-amplifier, a log amplifier, and a linear amplifier. Trips are provided for over power, short period, and loss of detector high voltage. A blade withdrawal interlock is activated for specific conditions impacting channel operability.

The period signal is obtained through a derivative circuit that produces a voltage proportional to the inverse of the reactor period. This is then amplified and displayed on a control panel meter that ranges in seconds from -30 to + 3 sec. An adjustable bistable circuit activates a trip, currently set at +3 seconds.

The linear amplifier accepts the linear current signal from the pre-amplifier. The output signal is then displayed as the power level on a linear scale ranging from 1 to 150% of rated power. An over power trip is set at 110% rated power resulting from operation of a bistable circuit. The channel also generates test signals to check the functioning of the channel.

7.1.3.1.2 Reactor Power Channel 2

Reactor Power Channel 2 provides the operator with measured power from source level to 150% of rated thermal power and can be used to maintain steady power level through an automatic flux control servo system. The signals are provided from two detectors, a compensated ion chamber (CIC) and an uncompensated ion chamber (UIC). Trips are provided for over power and loss of detector high voltage. A blade withdrawal interlock is activated for specific conditions impacting channel operability.

The CIC provides linear power level indication from just above source level to l00% of rated thermal power. The CIC is connected to circuitry containing a pico-ammeter with a multiple position range switch resulting in indicated power as a percentage of range switch position. The pico-ammeter sends a signal, which is a function of the linear indication of reactor power, to the servo amplifier as a part of an automatic reactor control circuit. At the servo amplifier, the signal is compared with the signal from the servo flux control.

The UIC provides power level indication from 1% to 150% of rated thermal power. The UIC is connected to circuitry containing an operational amplifier and an adjustable bistable trip. An over power trip is set at 110% rated power resulting from operation of a bistable circuit. The channel also generates test signals to check the functioning of the channel.

7.1.3.2 Process and Temperature Measurements

7.1.3.2.1 Primary Coolant System

A primary coolant flow monitor, with sensor located in the primary fill line, indicates flow and trips the reactor if flow is below the set point.

A coolant flow switch, located in the return line of the primary coolant system to the primary coolant storage tank, initiates a reactor trip in case of a loss of return flow. This flow switch actuates only after the return line has been drained of water or flow stops.

A sight glass, attached to the north wall of the reactor room, shows the water level in the core allowing a visual check of the primary coolant level. A float switch activates the reactor trip system when the water level in the core is below the pre-set limit.

Type T thermocouples are located at each of the six fuel box discharge lines to monitor water temperature from each fuel box. Additional Type T thermocouples monitor the temperature of the bulk primary water going to and exiting from the core. The thermocouples generate a representative mV signal and send it to the input of the digital paperless temperature recorder. The recorder converts the mV signal to display actual temperature and records the temperature values in memory. An alarm output relay is actuated if temperature reaches preset levels. The alarm output relay actuates an audible alarm module and speaker as well as an interposing relay connected to a reactor trip system relay. The operator can input a variable test signal to test all the relay functions. Monitored temperature points exceeding their preset levels result in an audible alarm and reactor trip.

A resistivity meter enables on line monitoring of resistivity of the primary. The meter annunciates if system resistivity drops below an adjustable preset value.

To monitor water intrusion from any source into the primary equipment pit, a level switch in a small sump at the lowest point of the pit floor will activate an alarm upon collecting water at 1 in. above pit floor level. The primary equipment pit sump alarm annunciates at a control unit mounted on the east wall of the control room.

7.1.3.2.2 Secondary Coolant System

A key operated switch inside the console rear door is used to switch secondary scram modes between well water (10 second trip delay) or city water (immediate trip) modes of operation. In either mode, the trip function is active only when reactor power is 1% or higher.

In the well water mode, a reduction of flow to a pre-set limit will illuminate a yellow warning light on the right side of the control console. A further reduction of flow to another pre-set limit will illuminate a red scram warning light on the right side of the console, and will illuminate a red warning light on the secondary flow scram annunciator light. Approximately ten seconds later, the trip will occur. When in the city water mode, if water flow reached the pre-set limit the reactor will trip.

Type T thermocouples monitor the temperature of the bulk secondary water going to and exiting from the heat exchanger and send to the digital paperless recorder described earlier.

7.1.3.2.3 Shield Tank System

A water level switch at the top of the reactor shield tank will trip the reactor when the water level drops below a preset value.

7.2 Reactor Control System

7.2.1 Control-Blade Drives

The four control blades are positioned by control blade drives through a magnetic clutch power circuit which couples the blade drive shafts to the blade drive motors. Interruption of clutch current decouples the drive motor from the blade drive shaft allowing the blade to gravity fall to its fully inserted position. Control blade magnet power is controlled through the three-position key switch.

Twelve backlit push button switches are arranged in the center of the control panel in three rows of four vertical sets, one set for each control blade. Each set of switches contains a white DOWN switch, a red UP switch, and a yellow ON (magnet on) switch.

When the white DOWN light is illuminated, the control blade drive motor power circuit is prevented from drive action via the DOWN backlit pushbutton switch. When the red UP light is illuminated, control blades in manual control are similarly prevented from up motion. The yellow ON light is series-connected in the magnetic clutch power circuit so that if the yellow light is on, the magnetic clutch is energized; if the yellow ON light is off, the magnetic clutch is deenergized.

When any ON push button switch is depressed, magnet current is interrupted by actuation of the backlit switch, and the ON light remains extinguished for as long as the switch is depressed. If the control blade is above its down limit, the blade will gravity fall back into the core. Turning off the reactor key has the same effect. In the event of a loss of power, these blades fail safe, falling into the core by gravity.

The positions of the control blades relative to their lower limits are indicated on individual digital blade POSITION indicators mounted on the control panel.

Limit switches in the blade drive right angle gear box send a signal to the backlit control blade switches to indicate either full-in or full-out position. This also inhibits the control blade drive motor from actuating when the blade is at its limits of travel.

Wiper arm position indicators, mechanically coupled to the blade drive shafts via beveled gears, transmit blade position to the control console.

7.2.2 Control-Blade Inhibits

Control blade withdrawal inhibits function to prevent blade withdrawal for the following conditions:

- A source count rate of 2 cps or less;
- A reactor period of 10 seconds or shorter;
- Safety Channel 1 and 2 and wide-range drawer Calibrate (or Safety 1 Trip Test) switches not in "OPERATE" or "OFF" condition. This inhibit condition assures the monitoring of neutron level increases and prevents disabling protective functions;
- Attempt to raise any two or more blades simultaneously when the reactor is in manual mode, or two or more safety blades simultaneously when the reactor is in automatic mode. This multiple blade withdrawal interlock is provided to limit the reactivity addition rate;
- Power is raised in the automatic control mode at a period shorter than 30 sec. The automatic controller action is to inhibit further regulating blade withdrawal or drive the regulating blade down until the period is greater (slower) than or equal to 30 seconds.

7.2.3 Automatic Control

The UFTR Automatic Control System is used to hold reactor power at a steady power level during extended reactor operation at power and may be used to make minor power changes within the maximum range of the switch setting. While the automatic mode of reactor control is selected, the manual mode of operation is disabled; the control mode switch must be placed back in MANUAL before the regulating blade will respond to its UP or DOWN control switches. The neutron flux controller compares the linear power signal from the pico-ammeter with the power demand signal and moves the regulating blade to reduce any difference, thereby maintaining a steady power level.

7.3 Reactor Protection System

7.3.1 Trip Circuits

The UFTR facility is provided with two types of reactor trips. These reactor trips are classified into two categories:

- Full-trip, which involves the insertion of the control blades into the core and the dumping of the primary water into the storage tank;
- Blade-trip, which involves only the insertion of the control blades into the reactor core (without dumping of the primary water).

The following conditions will initiate a Full-trip when two or more control blades are not at their bottom position;

- Short Period (3 seconds or less);
- High Power (110%);
- Reduction of high voltage to the neutron chambers of 10% or more;
- Turning off the console magnet power switch;
- A.C. power failure.

The following conditions will initiate a Blade-trip:

- Loss of power to Stack Dilution fan;
- Loss of power to Core Vent fan/damper;
- Loss of power to the deep well pump when operating at or above 1 kW and using deep well for secondary cooling;
- Secondary flow below 60 gpm when operating at or above 1 kW using the well water system for secondary cooling (10 sec delay);
- Secondary flow below 8 gpm when operating at or above 1 kW using city water for secondary cooling (no delay after initial 10 second time interval);
- Shield tank water level 6” below established normal level;
- Loss of power to primary coolant pump;
- Primary coolant flow below 41 gpm (inlet flowrate);
- Loss of primary coolant flow (no return flow);
- Primary coolant level below 42.5”;
- Any primary coolant return temperature above 155°F;
- Primary coolant inlet temperature above 102°F;
- Initiation of the evacuation alarm;
- Manual reactor trip button depressed.

A set of annunciator lights is used to indicate scram conditions.

7.4 Engineering Safety Features Actuation System

There are no engineered safety feature actuation systems.

7.5 Control Console and Display Instruments

All functions essential to the operation of the UFTR are controlled by the operator from the control console.

The reactor control panel contains the following control and indicating instrumentation:

- A console power switch.
- A three-position key switch.
- A set of control-blade switches.
- One set of switches for controlling the secondary system city water valve.
- Four control blade position digital indicators.
- A manual scram bar.
- A set of scram and blade interlock annunciator lights.
- Power Channel #1 meters and calibrate/test controls.
- Power Channel #1 period meter and calibrate/test controls.
- Power Channel #2 meter and test controls (UIC).
- Power Channel #2 linear range switch (CIC).
- Power Channel #2 recorder (CIC).
- A mode selector switch for automatic or manual operation.
- A %-demand control potentiometer.
- Reactor cell door monitors.
- Reactor equipment control switches and annunciator lights.
- Digital clock.
- Pu-Be source alarm indicator.
- Rabbit system solenoid switch.

When the console key switch is “ON”, a red rotating beacon located in the reactor cell together with four "reactor on" lighted signs are energized. The “reactor on” lights are located on the outside of the east side of the Reactor building on the second floor level, on the entrance hallway leading to the control room, in the upstairs hallway, and on the west outside reactor building wall.

7.6 Radiation Monitoring System

The reactor vent system effluent monitor consists of a GM detector and preamplifier, which transmit a signal to the control room to monitor the gamma activity of the effluent in the downstream side of the absolute filter before dilution occurs. The stack monitoring system also consists of a log rate meter-circuit and indicator, a recorder, and an auxiliary log rate meter with an adjustable alarm setting capability.

The area radiation monitoring system consists of three area monitors with remote detector assemblies, interconnecting cables, recorders, and count rate meters. Detectors are mounted on the North, South, and East walls of the reactor cell. Each detector has an energy compensated Geiger counter with built-in Kr-85 check source that can be operated from the control room. The signals from these detectors are sent directly to the log count rate meter and recorder. Two levels of alarm are provided. A warning alarm (typically set to 2.5 mR/hr) and a high alarm (typically set to 10 mR/hr). Both levels latch in the alarm mode to preclude false indication if a high dose rate saturates the detector. Any two of the monitors seeing a high radiation level will automatically actuate the building evacuation alarm. Actuation of the evacuation alarm automatically trips the reactor and the reactor cell air handler system.

The stack monitor and 3 area monitor modules in the control room are equipped with test switches and green "NO FAIL" lights that go out if the modules do not receive signal pulses from the detectors. Floating battery packs supply power to the units in the event of electrical power loss.

Air from the reactor cell is pulled through the air particulate detector (APD) which is equipped with a recorder and an audible alarm and visible alarm setting. The APD is moveable but typically located inside the reactor cell just outside the control room glass so the operator can easily view the APD indications during reactor operation.

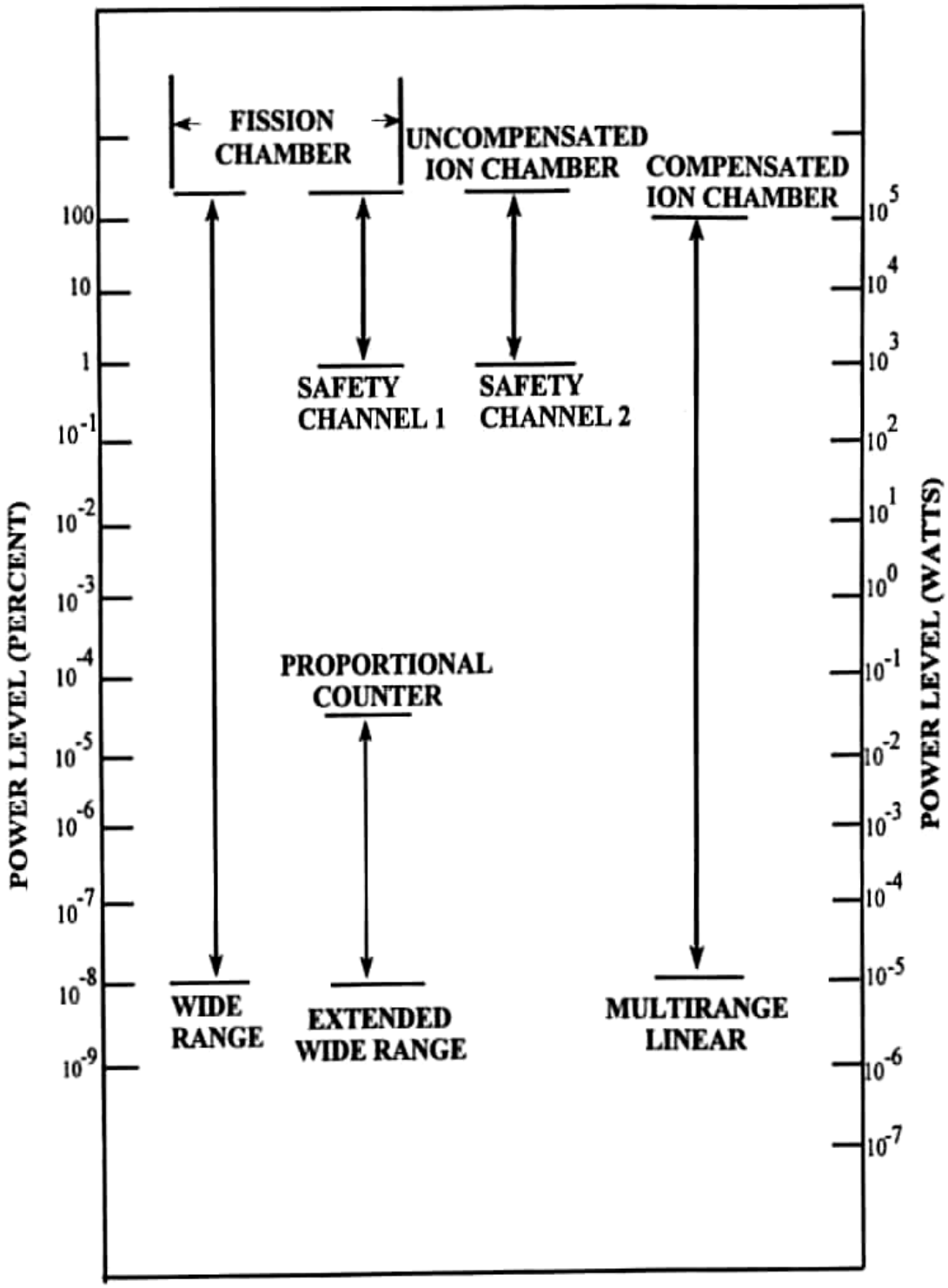

Figure 7-1 Operating Ranges of UFTR Nuclear Instruments

CHAPTER 8

ELECTRIC POWER

Chapter 8 - Valid Pages

i	Rev. 0	11/30/2016
ii	Rev. 0	11/30/2016
8-1	Rev. 0	11/30/2014

TABLE OF CONTENTS

8 ELECTRICAL POWER SYSTEMS

The UFTR does not generate electric power. Since the UFTR does not generate electrical power, there is no impact on the power grid. The design of the UFTR ensures the reactor is safely shutdown under a complete loss of electrical power. There is no credible accident that would lead to the release of radioactivity in case of loss of power.

8.1 Normal Electrical Power Systems

8.1.1 AC Power Systems

During operation, the electric power requirements for the UFTR will be supplied by the offsite regional utilities servicing the University of Florida. The facility requires power of ll5 V-AC at 60 Hz for the reactor console and auxiliary equipment. The facility also utilizes 230 V-AC and 480 V-AC at 60 Hz for various motors.

A loss of electrical power drops out the scram relays and de-energizes the magnetic clutches to trip the reactor by dropping the control blades under gravity completely into the core. Therefore, there is no need to consider offsite sources of emergency power.

Interruptions in power from the regional utilities system occur occasionally. Although such trips associated with loss of power are bothersome from a training or research standpoint, such a loss of power has no bearing upon the safe operation of the UFTR system.

8.1.2 DC Power Systems

The area radiation monitors and stack monitor are powered by 24 V-DC power supplies backed up with a "floating" battery pack. Emergency DC lighting is located in various locations throughout the reactor building and the reactor cell. Additionally, there are wall mounted rechargeable hand-held flashlights at various locations within the reactor building and reactor cell.

8.2 Emergency Electrical Power Systems

The UFTR is connected to a Diesel Electric Generator located in the West fenced lot area of the facility. The Diesel Generator provides backup electrical power for all reactor systems, including the radiation monitoring and physical protection systems, as well as emergency lighting, except for the primary coolant system dump valve. In this way all the monitoring systems are supplied with electric power but the reactor cannot be operated.

No credit is taken for the back-up electrical Diesel Generator for safety analysis considerations. For additional information on the Diesel Generator refer to Chapter 9.

CHAPTER 9

AUXILIARY SYSTEMS

Chapter 9 – Valid Pages

i	Rev. 0	11/30/2016
ii	Rev. 0	11/30/2016
9-1	Rev. 0	11/30/2016
9-2	Rev. 0	11/30/2016
9-3	Rev. 0	11/30/2016
9-4	Rev. 0	11/30/2016
9-5	Rev. 0	11/30/2016
9-6	Rev. 0	11/30/2016
9-7	Rev. 0	11/30/2016
9-8	Rev. 0	11/30/2016
9-9	Rev. 0	11/30/2016

TABLE OF CONTENTS

LIST OF FIGURES

9 AUXILIARY SYSTEMS

9.1 Heating, Ventilation, and Air Conditioning Systems

9.1.1 Reactor Cell Heating and Cooling Ventilation System

The reactor cell is air conditioned with a recirculating type system designed to provide an atmosphere suitable for reliable operation of electronic instruments and for human comfort. The HVAC system is a closed recirculation type capable of a total conditioned air delivery around 6500 CFM at approximately 75°F and 50% relative humidity, summer and winter.

Liquid condensate resulting from HVAC operation is routed to an aboveground tank in the reactor cell. Actuation of the evacuation alarm automatically trips the reactor cell HVAC system.

9.1.2 Core Vent System

The design of the core vent system ensures reactor cell pressure is maintained slightly negative, and minimizes accumulation of radioactive gases into the reactor cell, by drawing air from the cell, through the reactor and out the exhaust stack. Core vent air passes through a rough and absolute filter and is routed into the stack where it is diluted with outside air before it is released to the atmosphere.

The vent flow is controlled by the operation of a small blower fan and an electrically actuated damper. Vacuum breaker vent lines connect the tops of the fuel boxes to the coolant storage tank to provide an air-return path allowing rapid dumping of the water from the boxes. The physical arrangement of the core vent system within the reactor cell is illustrated in Figure 9-1. A schematic flow diagram of the core vent system and its connection to the stack are illustrated in Figure 9-2.

Vent flow rate is measured on-line (prior to any outside air dilution) and displayed on a gauge for the operator. The differential pressures across the roughing filter and across the absolute filter are also measured and indicated by gauge readings.

Gamma activity of the gaseous effluent release is monitored (see Figure 9-2). An audible alarm is actuated in the control room in the event the vent flow activity reaches a preset level. The data from this monitor is continuously recorded. In the core vent exhaust duct there is a motor opened, spring-closed damper valve that is interlocked with the core vent fan to close automatically whenever the core vent fan is not operating.

Loss of electrical power to either the reactor vent damper or the stack dilution fan motor will result in a reactor trip. The vent damper is electrically interlocked with the stack dilution fan motor control circuit so that the damper control cannot be opened unless the dilution fan is energized. This interlock prevents the discharge of undiluted air effluent via the stack.

9.1.3 Stack Dilution System

The design of the stack dilution system ensures air from the core vent system is diluted prior to release. The stack dilution system has two modes of operation: normal and high plume.

In the normal mode, air from the core vent system is diluted with outside air using the stack dilution fan prior to release from the chimney stack some 30 feet above ground level.

In the high plume mode, the combined flow of the core vent fan and stack dilute fan are redirected from the top of the stack chimney to the suction side of the high plume exhaust fan. At this point, the air is further diluted with outside air and its discharge velocity is increased significantly. The high discharge velocity results in a significantly increased plume height (release point) further reducing any potential exposures to the public.

The physical arrangement of the stack dilution system is illustrated in Figure 9-3.

9.2 Handling and Storage of Reactor Fuel

Reactor fuel assemblies not in the reactor are stored in a geometric array such that k_{eff} will be no greater than 0.9 for all conditions of moderation using light water (Ref. 9.1).

9.2.1 New Fuel Storage

Un-irradiated reactor fuel is normally stored in a multiple-drawer, fire-resistant safe equipped with a combination lock. The bottom of each drawer is lined with cadmium and no more than 56 plates can be placed in a drawer at any one time. Standard Operating Procedures provide directions for the safe handling, loading, and unloading of new fuel.

9.2.2 Spent Fuel Storage

[redacted]

9.2.3 Bridge Crane

A 3-ton bridge crane is provided for handling shield blocks, lead casks, and other heavy equipment. Adequate clearance is provided for the lead transfer cask to remove irradiated fuel elements from the reactor and for the installation of any experimental equipment that may be desired. A mezzanine balcony serves as a maintenance area for the crane.

9.2.4 Fuel Handling Systems

9.2.4.1 Fuel Transfer Cask

The fuel transfer cask is presented in Figure 9-4. The fuel transfer cask is both top and bottom loaded and holds one fuel bundle. The structural components are fabricated from stainless steel with lead filler. The radiation exposure rate to operating personnel is typically less than 10 mr/hr at the outer surface of the fuel transfer cask when loaded with an irradiated fuel bundle with a one-week cooling time.

9.2.4.2 Cask Positioning Plate

The cask positioning plate, presented in Figure 9-5, is used to locate and support the fuel transfer cask above the reactor core. The plate is made of ¼”carbon steel.

9.2.4.3 Fuel Element Handling Tool

[redacted]

9.3 Fire Protection Systems and Programs

Guidance and outlines of required as well as recommended actions to be taken if a fire occurs in the UFTR reactor cell or control room areas are specified in facility emergency procedures.

Conventional fire extinguishing equipment is located in the reactor cell and throughout the reactor building. An automatic fire alarm system monitors the reactor cell and the remainder of the reactor building continuously.

The fire alarm system is provided with local monitoring and a control station and is completely supervised with emergency battery backup.

9.4 Communications Systems

A full-service telephone is installed within easy reach of the reactor operator at the console. This provides direct communication within the building, on and off-campus including: Facility Director, Reactor Manager, Radiation Control Office, Health Physics Office, University of Florida Police Department, Gainesville Fire Department and Senior Reactor Operator on Call. Additional phones and communication systems are available for communication within the building as well as on and off-campus.

9.5 Water Systems

9.5.1 Shield Water Tank

The shield water tank is a 5 ft. x5 ft. x 14 ft. high water tank placed against the west face of the reactor, opposite the thermal column. This test tank is primarily used for shielding and experimental purposes.

Shield water tank components include:

1. Water level indicator,
2. Pump,
3. Ceramic filter,
4. Flow water indicator,
5. Demineralizer,
6. Sampling valve.

9.5.2 Demineralized Water Makeup

Demineralized water is used to provide makeup for the primary coolant and shield water systems. Demineralized makeup water is produced by running potable water through commercially available demineralizer beds and a hose.

9.6 Other Auxiliary Systems

This section is not applicable because there are no other auxiliary systems.

9.7 References

9.1 Discussion and Analyses of Fuel Storage Facilities Criticality and Safety Requirements for Tech Spec Amendment 26 Consideration, ADAMS ML062350107, August 4, 2006.

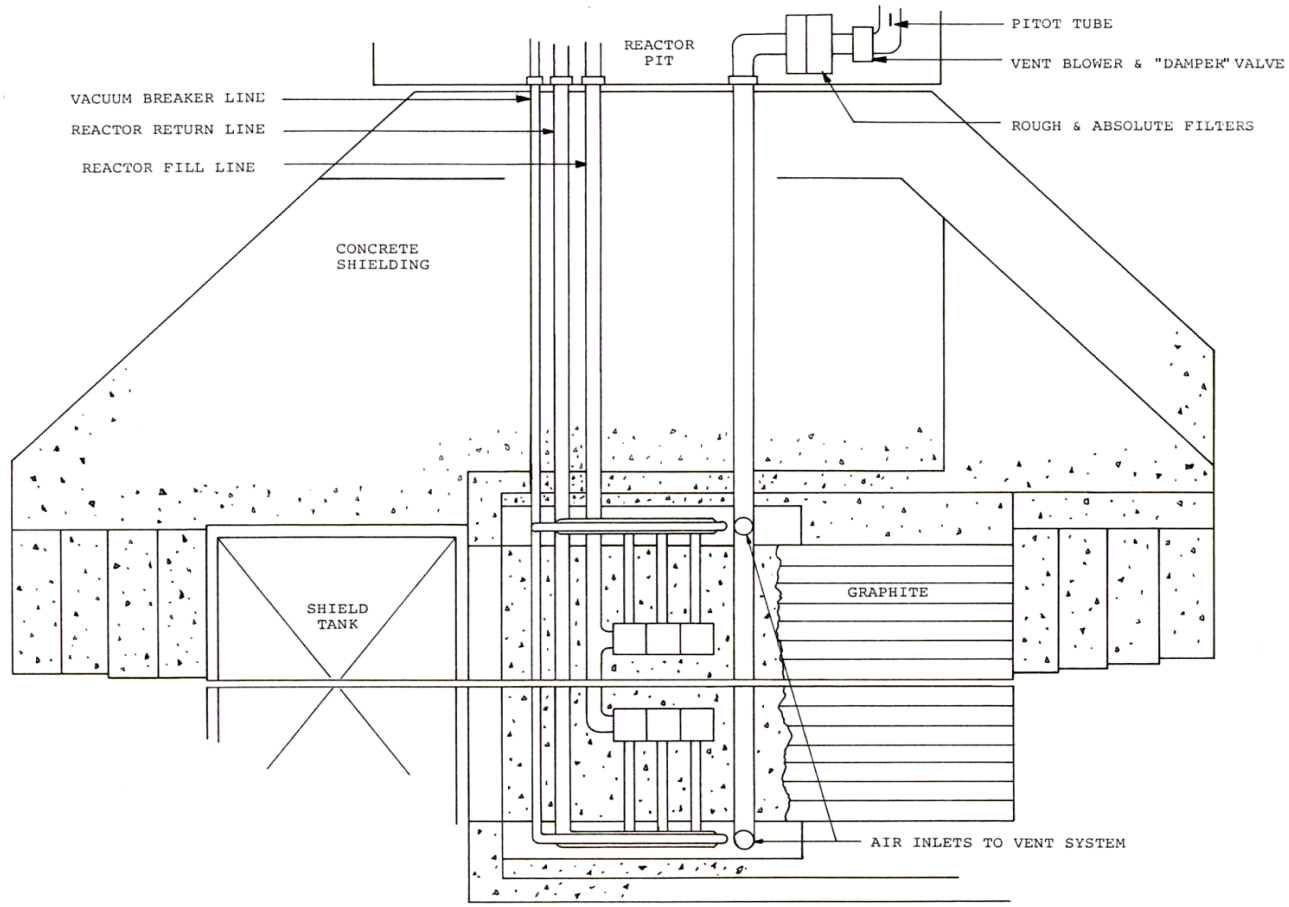

FIGURE 9-1

PHYSICAL ARRANGEMENT OF CORE VENT SYSTEM

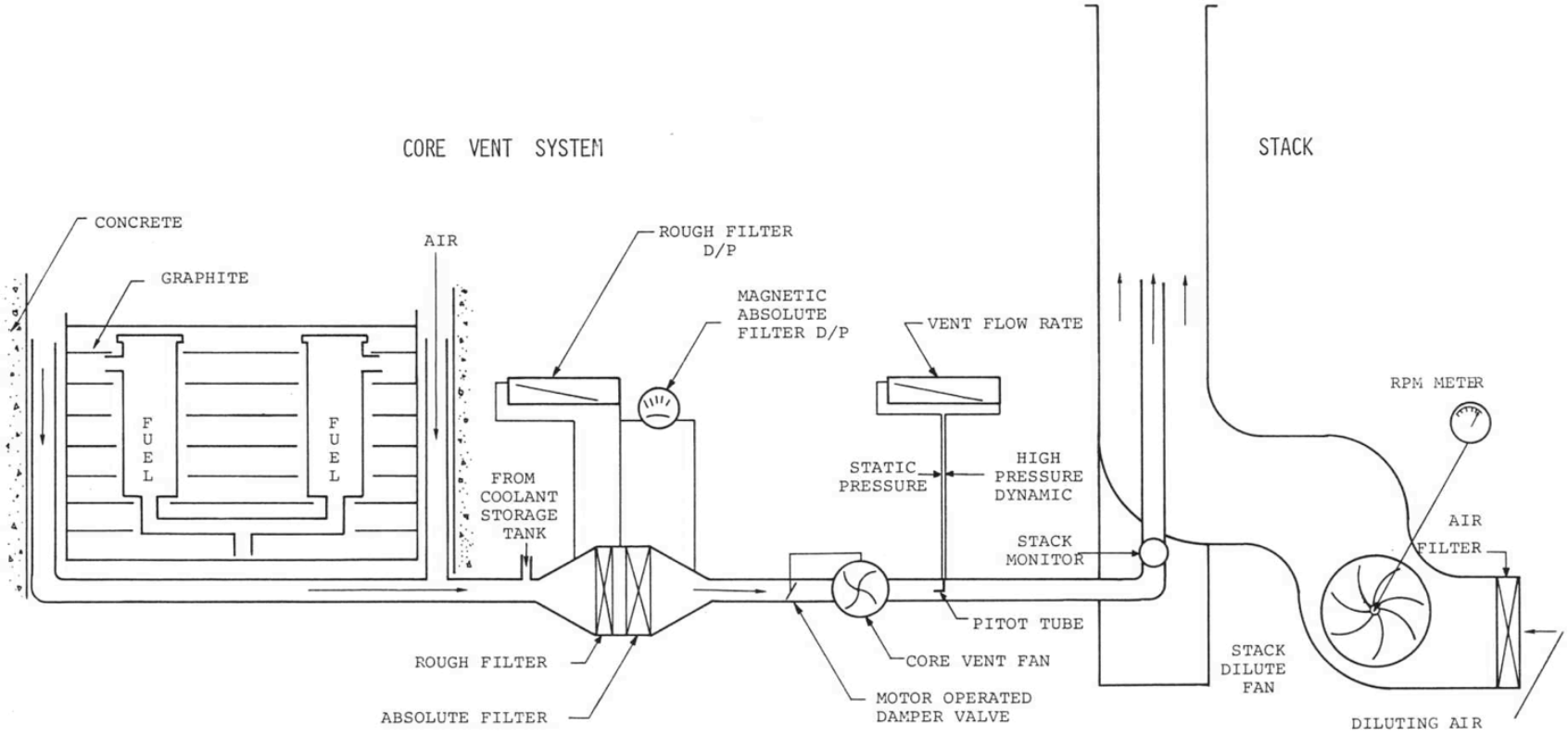

FIGURE 9-2

SCHEMATIC REPRESENTATION OF CORE VENT SYSTEM

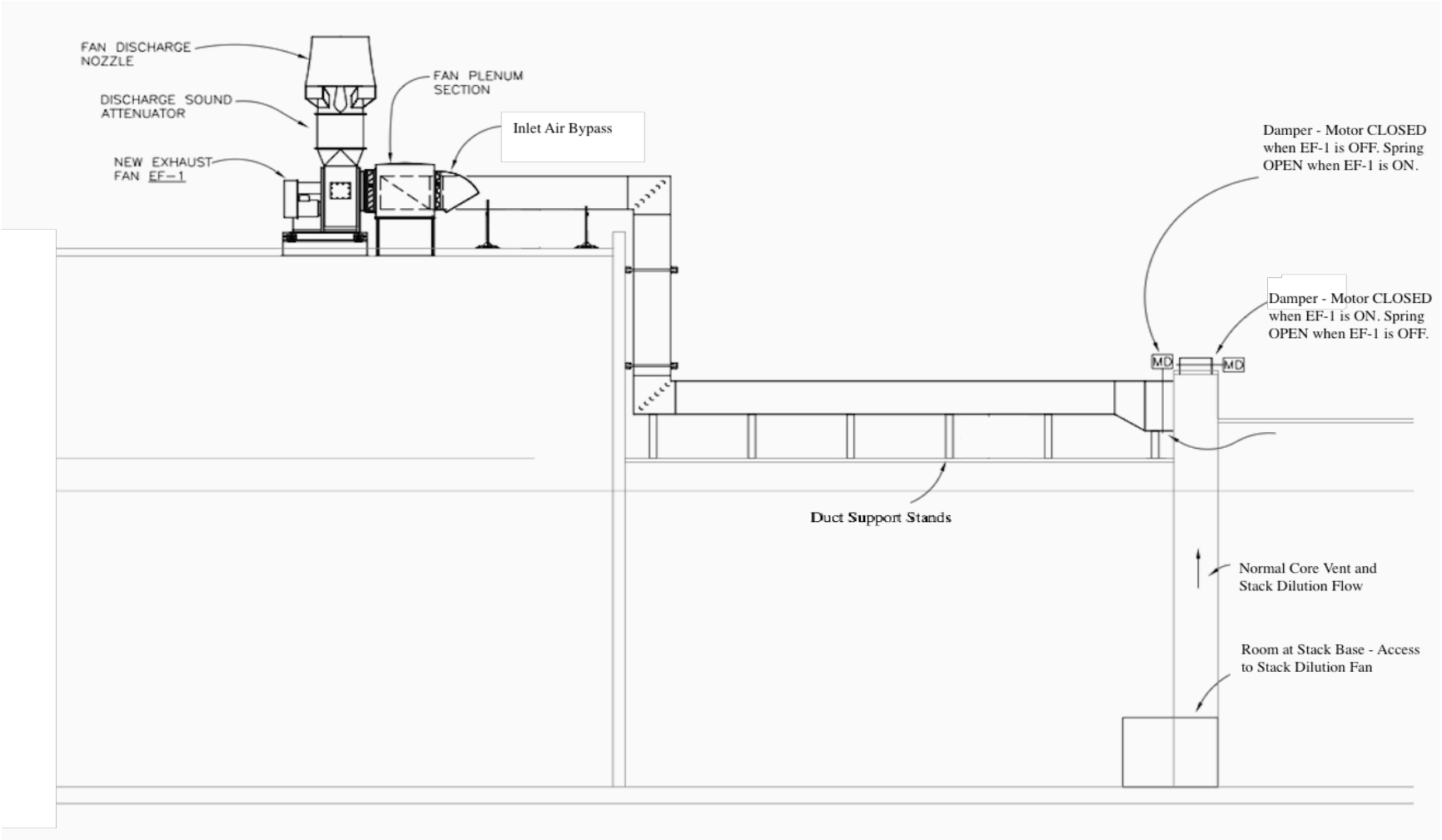

FIGURE 9-3

PHYSICAL REPRESENTATION OF NORMAL STACK AND HIGH PLUME DILUTION SYSTEMS

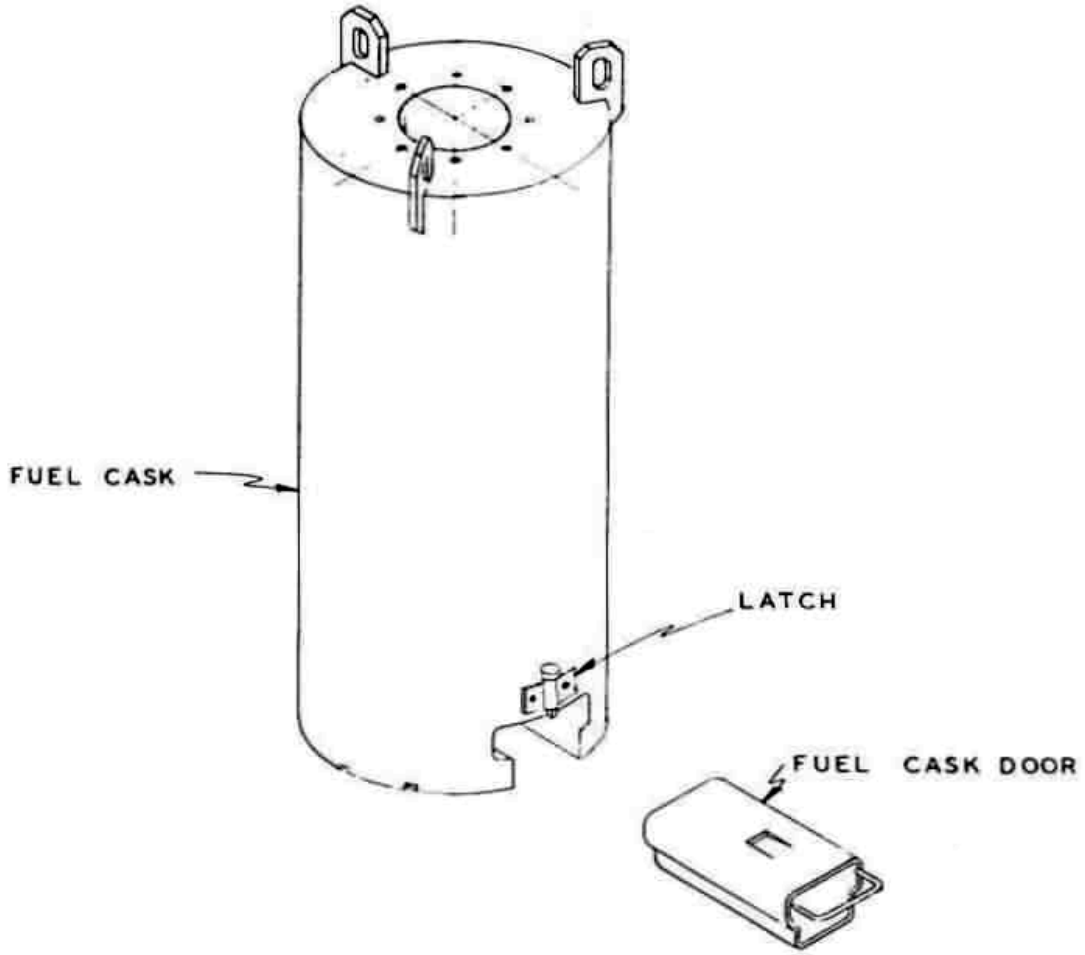

FIGURE 9-4
FUEL TRANSFER CASK

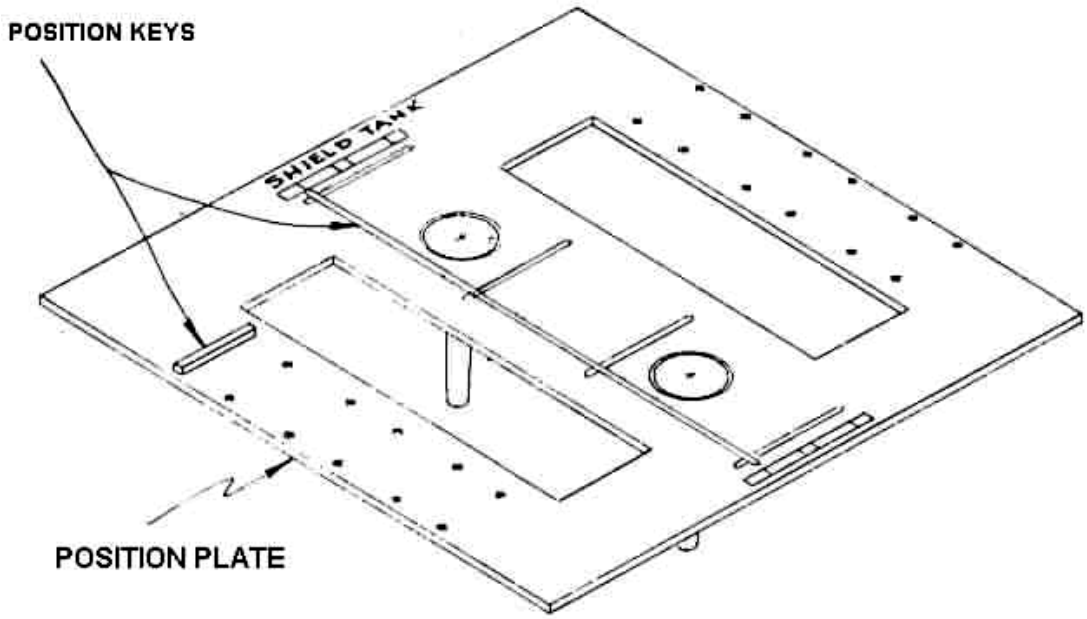

FIGURE 9-5

CASK POSITIONING PLATE

[redacted]

FIGURE 9-6

FUEL HANDLING TOOL.

CHAPTER 10

EXPERIMENTAL FACILITIES

Chapter 10 – Valid Pages

i	Rev. 0	11/30/2016
ii	Rev. 0	11/30/2016
10-1	Rev. 0	11/30/2016
10-2	Rev. 0	11/30/2016
10-3	Rev. 0	11/30/2016
10-4	Rev. 0	11/30/2016
10-5	Rev. 0	11/30/2016
10-6	Rev. 0	11/30/2016
10-7	Rev. 0	11/30/2016

TABLE OF CONTENTS

LIST OF FIGURES

10 Experimental Facilities

10.1 Summary Description

The UFTR is used as a teaching and training tool, for research operations, and provides a range of irradiation services. These services include isotope production, neutron activation analysis, and neutron radiography.

The experimental facilities in the UFTR include:

- Vertical foil slots placed at intervals in the graphite stringers;
- Three vertical ports located centrally with respect to the six fuel boxes;
- Thermal column extending from the East face of the reactor;
- Shield tank against the West side of the reactor;
- Six horizontal openings (beam tubes) on the center plane of the reactor;
- A horizontal through port running east-west across the reactor; and
- The pneumatic transfer facility (rabbit system).

The overall physical arrangement of these exposure facilities is depicted in Figure 10-1, which is a horizontal section through the reactor at the beam tube level. More detailed sketches of the size and orientation of these exposure facilities are presented in Figure 10-2 for the center vertical port and horizontal through port and in Figure 10-3 for the other major experimental exposure facilities.

10.2 Experimental Facilities

10.2.1 Foil Slots

Vertical foil slots, 3/8 in by 1 in. are located at intervals in graphite stringers which can be placed between the fuel boxes or within the thermal column and then used for flux mapping.

10.2.2 Vertical Ports

There are three (3) vertical experimental holes, 2”, 1-3/4” and 1-1/2” in diameter, which are centrally located with respect to the six fuel boxes. The maximum neutron flux is available in the vicinity of these ports. Stepped shield plugs are normally inserted except where an experiment or test requires otherwise.

10.2.3 Thermal Column

A thermal column is provided in the east face of the reactor having four 4 in. by 4 in. removable stringers. The horizontal thermal column is 60 in. x 60 in. x 56 in. high. Experiments requiring highly thermalized neutrons can be placed in the thermal column or in the emergent beam. Stepped shield plugs are normally inserted except where an experiment or test requires otherwise.

10.2.4 Shield Water Tank

A water tank is placed against the west face of the reactor opposite the thermal column and is shielded on the outer three sides by concrete. This 5 ft. x 5 ft. x 14 ft. high shield tank can be used to perform shielding experiments or for the irradiation of large objects. If the location does not give sufficient fast neutrons, the thermal neutrons leaving the face of the reactor can be converted to fast neutrons by a converter plate installed inside the tank.

10.2.5 Horizontal Ports

Six horizontal openings, 4 in. in diameter are located in the center plane of the reactor as shown in Figure 10-3. These horizontal ports may be fitted with collimators to allow for neutron transmission experiments. Stepped shield plugs are normally inserted except where an experiment or test requires otherwise.

10.2.6 East-West Through Port

A horizontal aluminum pipe passes through the shield tank outer wall and is welded to the reactor west face. This tube allows the insertion of the East-West through port (EWTP). The EWTP is a horizontal tube approximately 1.88 in ID x 20 ft. in length.

10.2.7 Automatic Transfer System (Rabbit)

The UFTR rabbit sample transfer system, shown in Figures 10-4 and 10-5, is a pneumatic system designed to quickly transfer samples into and out of the reactor core. The specimens are placed in a small polyethylene capsule (rabbit capsule) which is placed into the receiving station. The rabbit capsule travels through a polyethylene tube from the receiving station to the west side of the shield tank. The polyethylene tube is connected to an aluminum pipe which goes through the shield tank to the reactor center line. The rabbit returns along the same path to the receiving station. A regulator valve supplies nitrogen gas to the system and a solenoid valve directs air flow. The gas flow design minimizes the possibility of fragments from a shattered rabbit becoming trapped in the center of the reactor. Samples may be inserted for automatic insertion and return or manual insertion and return.

10.3 Experiment Review

The UFTR experiment review and authorization process is described in the UFTR Standard Operating Procedures and designed to ensure all experiments are performed in a manner that ensures the protection of the public. The Reactor Safety Review Subcommittee (RSRS) evaluates the classification and safety aspects of all new experiments and any change in the facility that may be necessitated by the requirements of the experiment.

Experiments are classified in three categories; the basis for the classification of experiments is the potential impact on the facility and potential radioisotope production. The three categories are as follows:

Class I Experiments include routine experiments that involve small changes in reactivity, no external shielding changes, and/or limited radioisotope production.

Class II Experiments include relatively routine experiments which may involve larger changes in reactivity, external shielding changes, and/or larger amounts of radioisotope production, and which pose no hazard to the reactor, to UFTR personnel or to the public.

Class III Experiments consist of those special experiments involving unusual experiment setups or irradiation of significant quantities of fissile materials.

A properly completed and reviewed Run Request is required prior to final approval of an experiment by the RSRS. Once an experiment has been approved, each irradiation of the experiment will be controlled and documented by a Record of Irradiation (RI). For Class I experiments, the RI can be approved by the Reactor Manager. For Class II experiments, RI approval requires authorization of the Reactor Manager and Radiation Control Officer. Class III experiments must be resubmitted for approval to the RSRS each time they are performed.

To ensure protection of the public, specific limits are placed on the experiments as detailed in the FSAR Chapter 13 and the Technical Specifications.

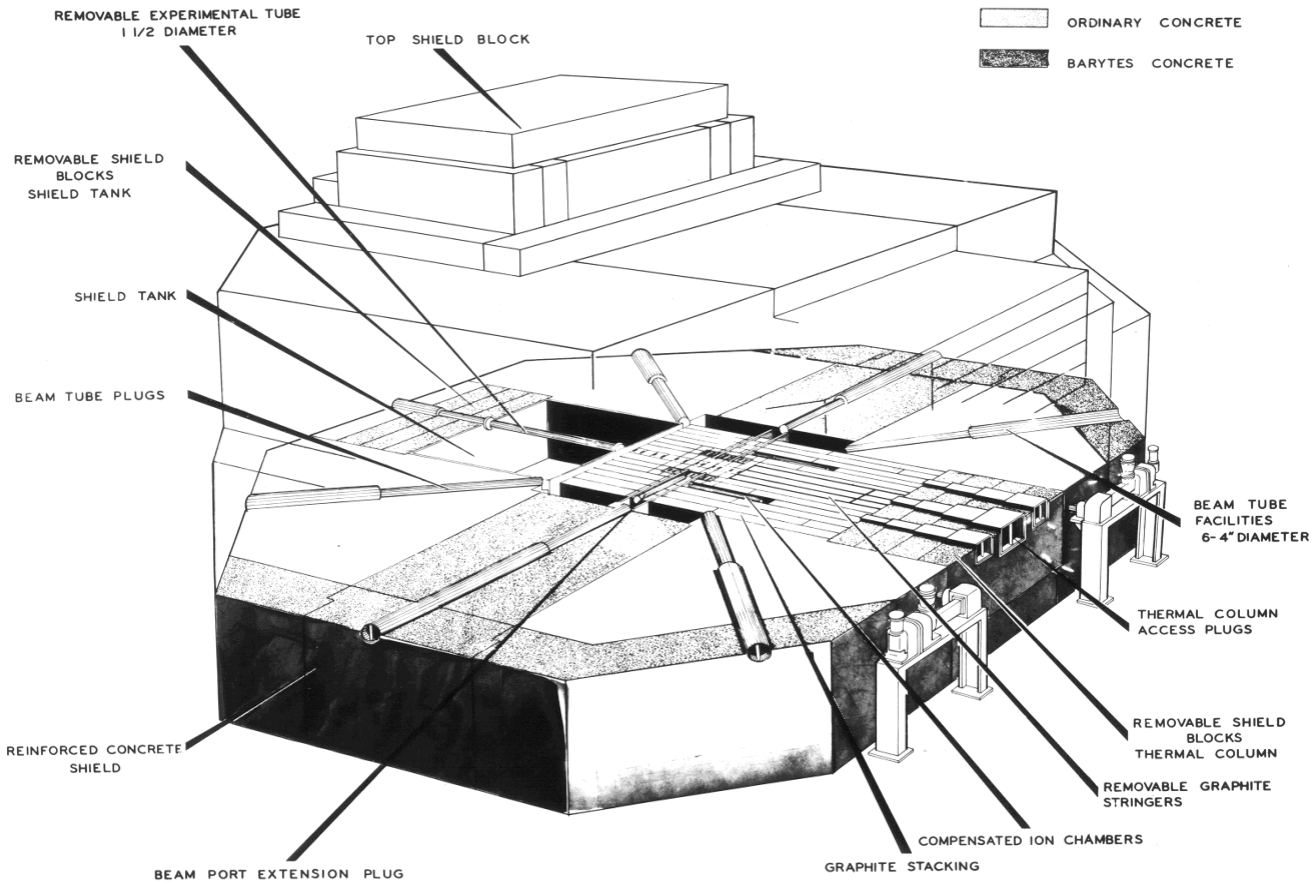

FIGURE 10-1

HORIZONTAL SECTION DIAGRAM OF UFTR AT BEAM TUBE LEVEL

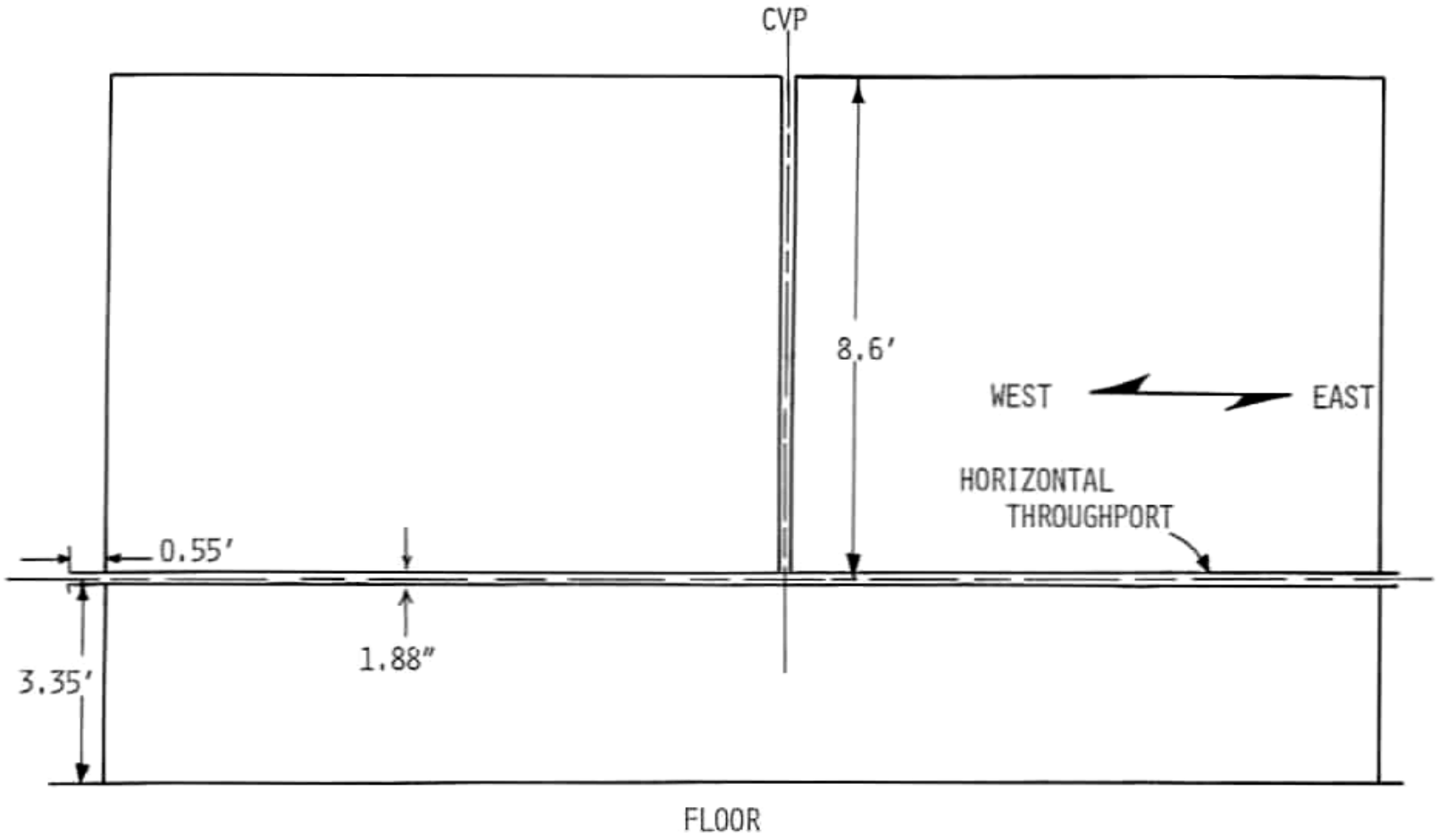

FIGURE 10-2

CROSS SECTION SHOWING CENTER VERTICAL PORT (CVP) AND EAST-WEST THROUGH PORT ARRANGEMENT WITH DIMENSIONS (NOT TO SCALE)

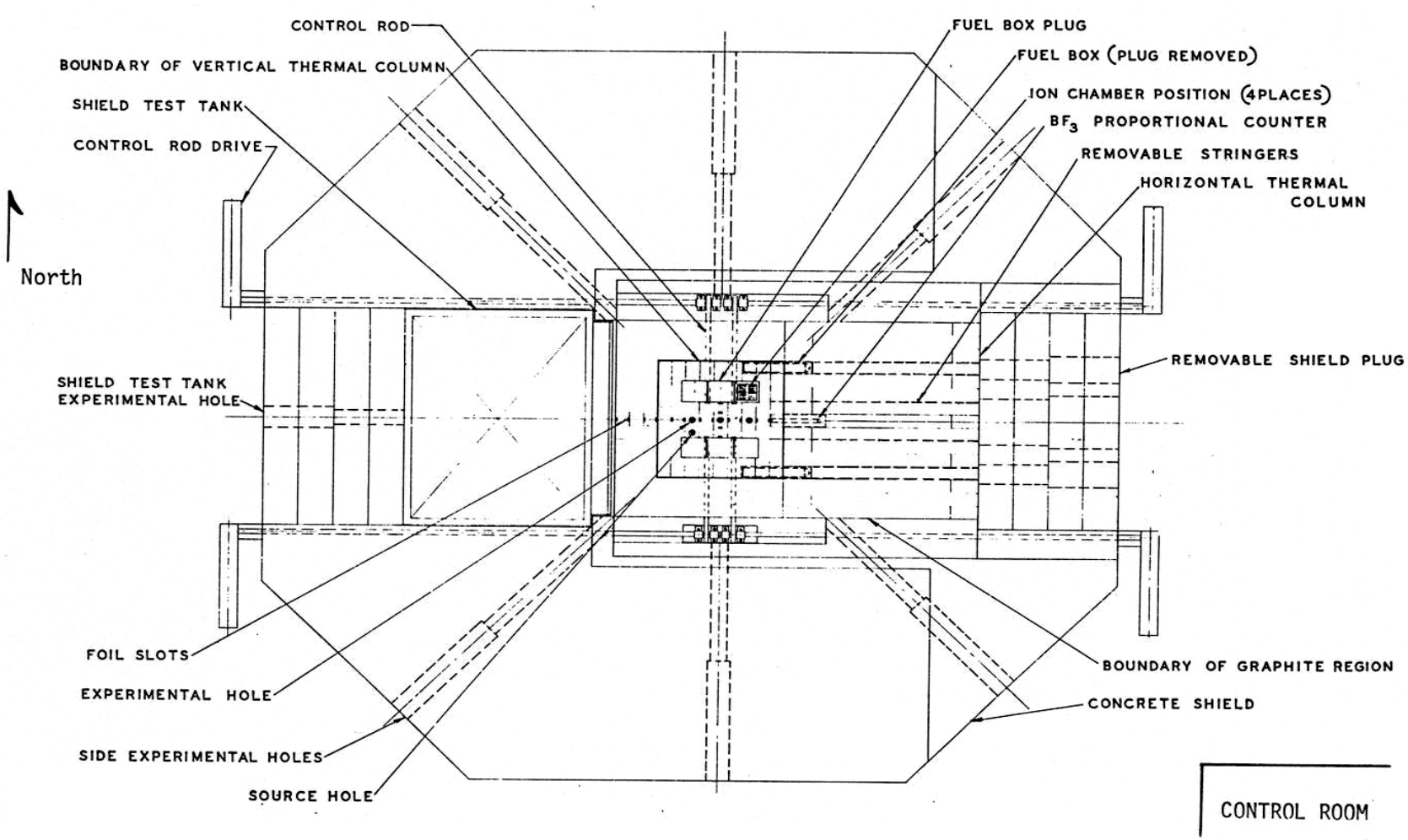

FIGURE 10-3

GEOMETRIC ARRANGEMENT OF MAJOR EXPERIMENTAL FACILITIES

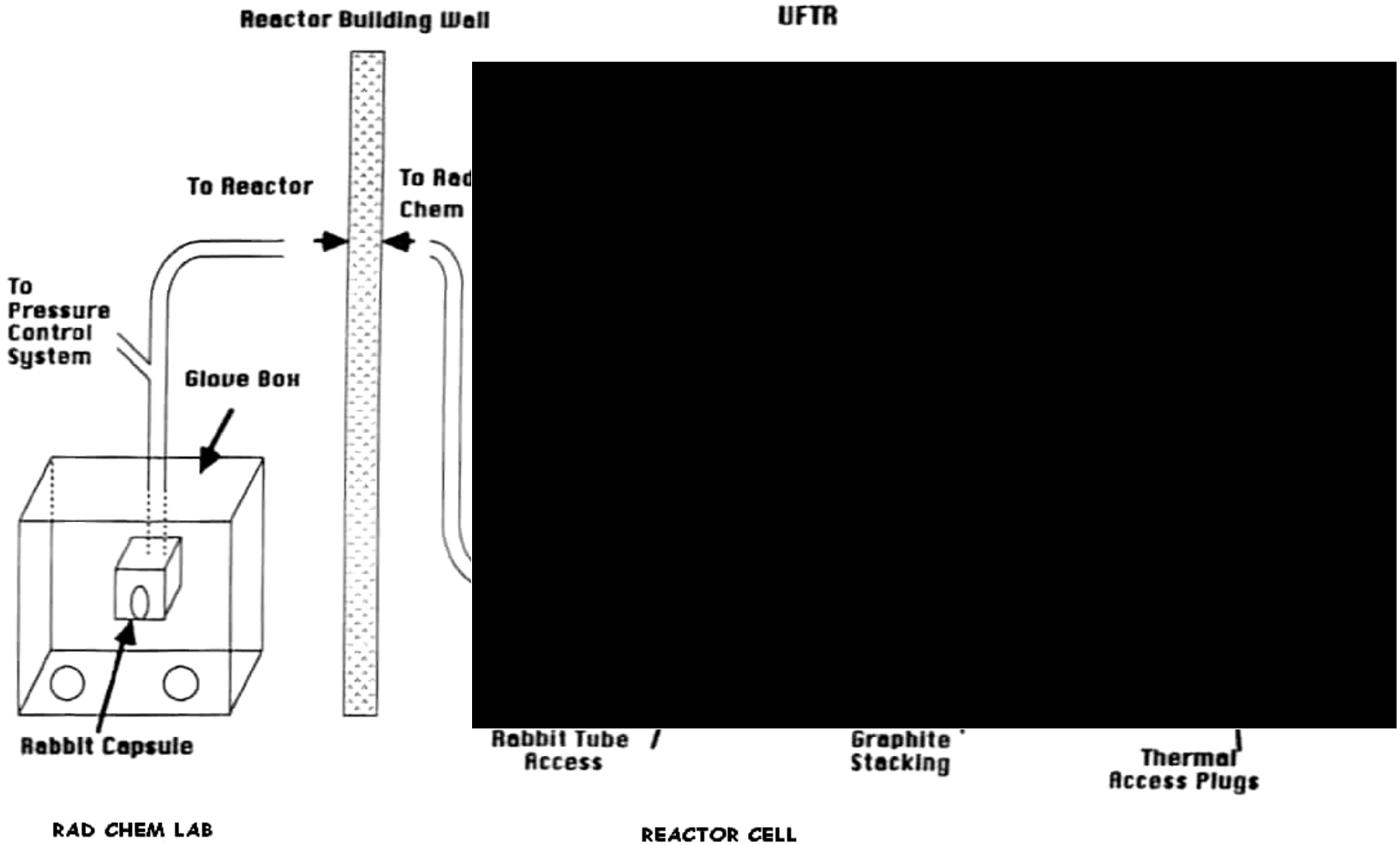

FIGURE 10-4

VERTICAL CUT OF THE REACTOR SHOWING THE RABBIT SYSTEM

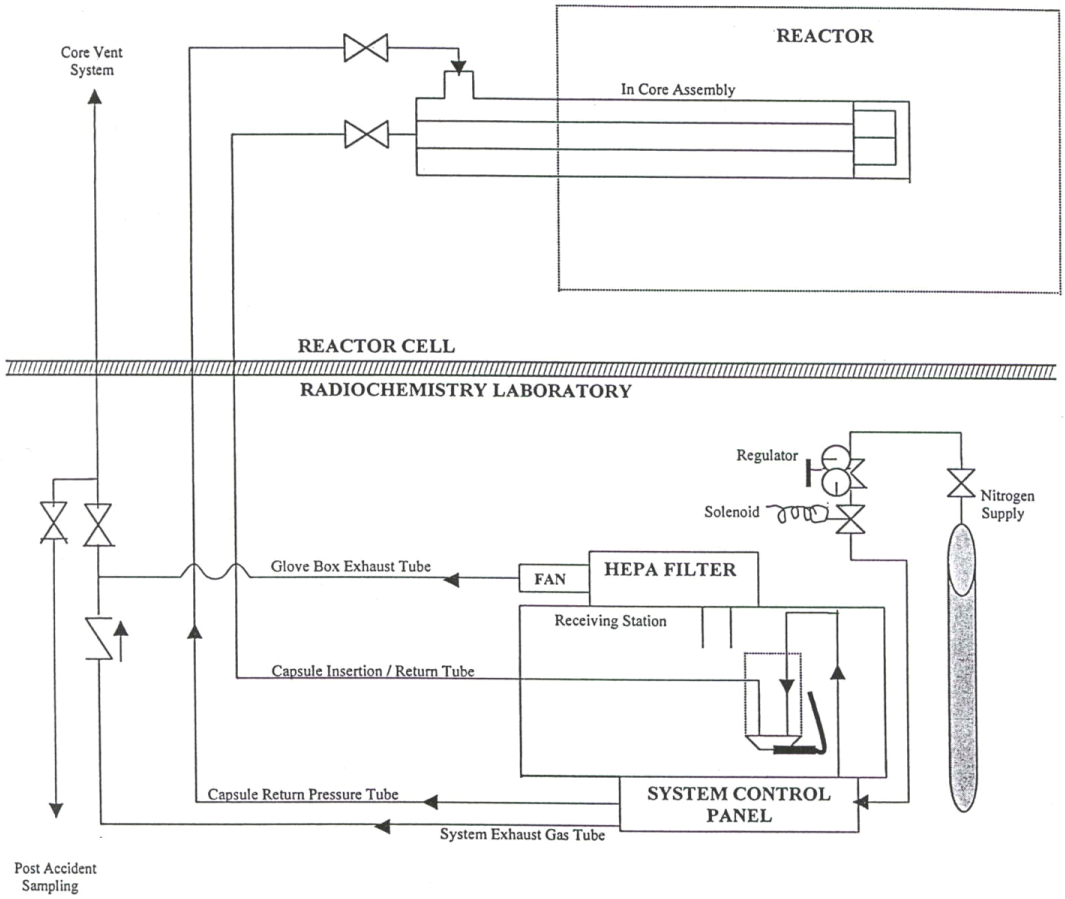

FIGURE 10-5

RABBIT SYSTEM

CHAPTER 11

RADIATION PROTECTION AND WASTE MANAGEMENT

Chapter 11 – Valid Pages

i	Rev. 0	11/30/2016
ii	Rev. 0	11/30/2016
11-1	Rev. 0	11/30/2016
11-2	Rev. 0	11/30/2016
11-3	Rev. 0	11/30/2016
11-4	Rev. 0	11/30/2016
11-5	Rev. 0	11/30/2016
11-6	Rev. 0	11/30/2016
11-7	Rev. 0	11/30/2016
11-8	Rev. 0	11/30/2016
11-9	Rev. 0	11/30/2016
11-10	Rev. 0	11/30/2016

TABLE OF CONTENTS

LIST OF TABLES

11 RADIATION PROTECTION AND WASTE MANAGEMENT

11.1 Radiation Protection

11.1.1 Radiation Sources

11.1.1.1 Airborne Radiation Sources

As described in Chapter 9, the design of the reactor cell ventilation systems ensure that leakage and accumulation of radioactive gases into the reactor cell is prevented by drawing air from the cell, through the reactor and out the exhaust stack.

The only radioisotope of concern is the Argon-41 produced in the UFTR as a result of neutron activation of the Argon-40 in the air drawn in through the crevices in the concrete and the graphite reflector. The other gaseous components of air are either too rare, have small activation cross sections, or produce activated products having half-lives too short to be of significance.

11.1.1.1.1 Occupational Exposure from Ar-41 During Routine Reactor Operations

The only routine occupational exposure from Ar-41 occurs during performance of stack effluent surveillance measurements involving manual grab samples of stack effluent. This surveillance has a semiannual frequency and surveillance related exposures are kept ALARA and well within 10 CFR 20 limits.

11.1.1.1.2 Estimated Annual Dose in the Unrestricted Area from Ar-41 Released During Routine Reactor Operations

Regulation 10 CFR 20.1101(d) imposes an ALARA constraint on airborne emissions of radioactive material to the environment such that the individual member of the public likely to receive the highest dose will not be expected to receive a total effective dose equivalent (TEDE) in excess of 10 mrem per year from these emissions. This constraint ensures that dose from airborne emissions make up no more than 10% of the 100 mrem per year limit of 10 CFR 20.1301(a)(1) and therefore this analysis will focus on ensuring compliance with the ALARA constraint.

While, in principle, the dose resulting from the release of radionuclides to the atmosphere can be determined by environmental monitoring, at the low levels consistent with the limit of the constraint, it is not reasonable to distinguish the portion attributable to UFTR Ar-41 emissions from that which is due to background radioactivity. Therefore, an expected dose must be determined analytically.

To ensure compliance with the annual TEDE constraint of 10 CFR 20.1101(d), the UFTR limits Ar-41 produced by administratively limiting effective full-power hours of operation (EFPHs). Periodic surveillance measurements of the stack effluent are performed to determine instantaneous Ar-41 concentration. Based on this instantaneous concentration and stack release point parameters, a monthly EFPH limit is calculated to ensure compliance with the annual TEDE constraint of 10 CFR 20.1101(d). Prior to reactor operation, the cumulative EFPHs for the month are compared to this monthly limit to prevent exceeding the monthly limit.

The air concentration at any point in the environment is an extremely complex function of the quantity of the radioactive material released, the configuration of the facility from which the material is released, the distance from the point of the release to the locations of interest, the meteorological conditions, and various depletion processes which remove the radioactive material from the effluent plume as it moves from the point of release to the location of the receptor. To avoid excessive conservatism which result in further constraints on UFTR energy generation, this complexity necessitates the use of a computer code. Additionally, consistent with the low level specified by the ALARA constraint, the UFTR has determined that the effort and expense of implementing a detailed site specific environmental model are not practical or reasonable.

Diffusion and atmospheric turbulence are the primary processes acting to reduce the Ar-41 concentrations in the plume. The degree of dilution resulting from atmospheric turbulence and diffusion depends upon the stability of the atmosphere, the joint frequency distribution of wind speed and direction, and the distance from the point of release to the location of the receptors. Additional factors that influence dilution include the height at which the release occurs, the rise of the effluent plume due to the momentum and/or thermal buoyancy of the gases in the effluent, and the relationship between the height of the release and the heights of the building from which the release occurs and surrounding structures.

When determining average concentrations over a long time period such as the annual average air concentrations of interest, assuming a neutral atmospheric stability is appropriate (Ref 11-4). For the case where atmospheric stability is neutral, the distance from the source to the point of maximum concentration can be calculated (Ref 11-1).

Based on the discussion above, the distance to the most exposed member of the public will be calculated and compliance with the constraint limit will be demonstrated using the NRC endorsed computer code COMPLY (Ref 11-3).

The computer code COMPLY assesses dose from airborne releases using varying amounts of site-specific information in four screening levels. In Level 1, the simplest level, only the quantity of radioactive material possessed during the monitoring period is entered. At Level 4, the COMPLY code produces a more representative dose estimate and provides for a more complete treatment of air dispersion by requiring the greatest amount of site-specific information (Ref 11-3).

The UFTR discharges Ar-41 through an exhaust stack approximately 9.1 meters above ground level. Based on the most recent surveillance measurements in October 2008, the emission rate of Ar-41 in the stack effluent is 1.351E-04 Ci/s (Ref 11-2). A summary of the October 2008 surveillance measurements is provided in Table 11-1.

Table 11-1
Summary of the UFTR Release Point Data Taken During the October 2008 Semiannual Ar-41 Surveillance Measurements

Core Vent Flow	0.10384 m^3/s
Stack Dilution Flow	6.3281 m^3/s
Ar-41 Concentration	2.100E-05 Ci/m^3
Total Stack Velocity	10.896 m/s

The maximum ground level concentration occurs on the plume center line at the downwind distance as follows (Ref 11-1):

$$\sigma_z = \frac{h_e}{\sqrt{2}}$$

where:
σ_z = vertical deviation of plume contaminant (m);

The effective stack height (h_e) can be calculated from the following equation (Ref. 11-1):

$$h_e = h + d\left(\frac{v_s}{\mu}\right)^{1.4}$$

where:
h = physical stack height (9.1 m);
d = stack diameter (0.876 m);
v_s = stack effluent velocity; and
μ = mean wind speed (m/s).

The distance (x) at which the maximum concentration occurs (d_{max}) can then be determined by solving for 'x' given the vertical diffusion parameter determined previously from the effective stack height using (Ref 11-4):

$$\sigma_z = (0.06x)\ \frac{1}{\sqrt{(1 + 0.0015x}}$$

where:
x = d_{max} = distance from point of release to receptor (m);

A 30-year wind rose is used to describe the average wind speed and wind direction. This wind summary data is provided in Table 11-2.

Table 11-2
Wind Summary for January 1, 1980 to December 31, 2009 for the Gainesville Regional Airport as Reported by NOAA Online Climate Data (Ref 11-5)

Direction - From	Frequency	Speed (m/s)
N	5.90%	3.35
NNE	4.50%	3.50
NE	5.20%	3.65
ENE	5.20%	3.71
E	7.50%	3.60
ESE	4.10%	3.50
SE	3.70%	3.55
SSE	3.10%	3.50
S	4.50%	3.60
SSW	3.30%	3.76
SW	3.50%	3.96
WSW	4.60%	4.32
W	7.50%	4.07
WNW	4.90%	3.60
NW	4.60%	3.40
NNW	3.80%	3.29
Calm	22.60%	0.00
Variable	1.60%	2.11
Mean Wind Speed =		2.81

Using the COMPLY computer code, the maximum expected TEDE, signified as $TEDE_{max}$, received by the most exposed member of the general public located at d_{max} may now be estimated. The result of calculating the annual TEDE to the general public from routine releases of Ar-41 into the unrestricted area is given in Table 11-3.

Table 11-3
Maximum Expected Annual Dose in the Unrestricted Area from Ar-41 Released During Routine Reactor Operations

μ (m/s)	h_e (m)	σ_z (m)	d_{max} (m)	$TEDE_{max}$ (mrem)
2.81	14.9	10.6	202	19.5

It should be noted that in order to receive the dose shown in Table 11-3, an individual would be required to continuously occupy the specified location (202 meters from the release point) for a full year while the reactor operated continuously for a year.

The calculated dose shows that the maximum expected Ar-41 concentration at the location of the most exposed member of the public results in greater than the ALARA constraint of 10 mrem/year but remains well within the 100 mrem/year limit of 10 CFR 20.1301(a)(1).

As discussed previously, the UFTR calculates a monthly EFPH limit based on surveillance measurements to ensure compliance with the annual TEDE constraint of 10 CFR 20.1101(d). Based on the measurements taken during the October 2008 performance of this surveillance and the associated TEDE result in Table 11-3, the UFTR is limited to 375 EFPHs per month.

This choice of ALARA constraint as the analysis limit, in combination with associated Technical Specifications, conservative occupancy assumption, and analysis above, provide reasonable assurance that dose resulting from UFTR Ar-41 emissions will meet the ALARA constraint of 10CFR20.1101(d) and be well within the limit of 10CFR20.1301(a)(1).

11.1.1.2 Liquid Radioactive Sources

Neutron activation product impurities in the primary coolant represent the only liquid radioactive material routinely produced during normal reactor operations. The majority of these impurities are removed from the primary coolant by the purification loop.

11.1.1.3 Solid Radioactive Sources

The solid radioactive sources associated with the normal operation of the UFTR are the fuel, neutron startup sources, fission chambers, solid wastes and activated materials.

11.1.2 Radiation Protection Program

Increased utilization of ionizing radiation at the University of Florida led the administration to establish a University-wide Radiation Control Program in the early 1960's. The primary purposes of this program are to assure the radiological safety of all University personnel, to assure that ionizing and nonionizing radiation sources are procured and used in accordance with Federal and State regulations, and to assure that radiation exposures are "as low as reasonably achievable" (ALARA). To assure these ends, the Radiation Control and Radiological Services Department was established under the Division of Environmental Health and Safety and headed by the Radiation Control Officer (RCO).

The Radiation Control Committee has designed procedures and policies in the form of a document entitled "Radiation Control Guide," in an effort to provide investigators using ionizing radiations with guidelines

necessary to maintain their facilities in a manner that keeps exposures ALARA. These procedures are consistent with regulations of the Nuclear Regulatory Commission and the Florida Department of Health; they are applicable to all facilities under the administration of the University of Florida including the UFTR facility.

In addition to University-wide radiation protection policies, the UFTR has embedded radiation protection and ALARA requirements into the UFTR Standard Operating Procedures.

11.1.2.1 Organization of Radiation Control Staff and Working Interface with Operations Staff

Details on the organizational structure, reporting pathways, and working interface can be found in Chapter 12.

11.1.2.2 Radiation Control Procedures

In addition to University-wide radiation protection policies, the UFTR has embedded radiation protection and ALARA requirements into the UFTR Standard Operating Procedures. While not intended to be all-inclusive, the following is a list of typical radiation control procedures incorporated into the UFTR Standard Operating Procedures:

- Radiation Protection and Control;
- Radiation Work Permits;
- Primary Equipment Pit Entry;
- Removing Irradiated Samples from UFTR Experimental Ports;
- Control of UFTR Radioactive Material Transfers; and
- Circulation, Sampling, Analysis, and Discharge of Holdup Tank Wastewater.

11.1.2.3 Radiation Protection Training

Unescorted facility staff and researchers receive training on radiation protection and on the techniques for avoiding, limiting and controlling exposure commensurate with their risk and sufficient for their work or visit. Facility operations personnel are trained and qualified on radiation control through the UFTR Requalification and Recertification Training Program.

11.1.2.4 Audits

The UFTR Reactor Safety Review (RSRS) Subcommittee reviews and audits reactor operations for safety, ensuring radiological safety at the facility. Details can be found in Chapter 12.

11.1.2.5 Radiation Control Records

Details on the records requirements can be found in Chapter 12.

11.1.3 ALARA Program

The University-wide ALARA policy is embedded as an integral part of the UFTR Standard Operating Procedures.

The D-series of SOPs describe the general radiation protection requirements and limits that must be observed to assure radiation exposures are kept ALARA per the University-wide ALARA policy. Specific procedures to be followed during maintenance operations are included in the E-series of SOPs. Specific procedures and radiation limits related to fuel handling operations are included in C-series SOPs. Radioactive waste handling and shipment are also addressed in D-series SOPs.

11.1.4 Radiation Monitoring and Surveying

11.1.4.1 Radiation Monitoring Equipment

UFTR radiation monitoring equipment is summarized in Table 11-4. This equipment is updated and replaced as needed and therefore this equipment list should be considered representative only.

Table 11-4
Radiation Monitoring Equipment

Item	Location	Function
Stack Monitor	Effluent Stack	Airborne particulate and gas
Area Radiation Monitors	Various locations in Reactor Cell	General area radiation fields
Air Particulate Detector	Reactor Cell ground floor	Airborne particulate
Portable Air Sampler	Various	Airborne particulate
Portal Monitor	Reactor Cell entrance	Personnel contamination
Portable Ion Chamber Survey Meter	Various	Beta/Gamma exposure rates
Portable GM Survey Meter	Various	Beta/Gamma exposure rates
Portable Pancake Probe GM Survey Meter	Various	Beta/Gamma contamination
Portable Neutron Survey Meter	Various	Neutron dose rates
Portable Micro-R Survey Meter	Various	Gamma exposure rates
HPGe Gamma Spectroscopy System	NAA Lab	Gamma spectroscopy
Gas Flow Proportional Counter	NSC Rm. 106 / NAA Lab	Alpha/Beta activity
Self-Reading Pocket Dosimeters	Various	Gamma exposure estimates
TLDs	Various	Environmental and personnel exposures

11.1.4.2 Instrument Calibration

Technical Specification required radiation monitoring systems are calibrated in accordance with Technical Specification requirements. Other radiation instruments, such as portable survey meters, are calibrated using local procedures based on ANSI N323-1978. Instruments not calibrated locally are sent to an appropriate calibration facility.

11.1.4.3 Routine Monitoring

The radiation survey program is structured to make sure that adequate radiation measurements of both radiation fields and contamination are made commensurate with the amount and type of work being performed with radioactive material. The intent of such surveys is to prevent uncontrolled release of radioactive material and to minimize exposure. This program includes, but is not limited to:

Surveys performed on a weekly basis include swipe surveys, air and water samples, and gamma radiation field surveys. Surface contamination in the room is determined by means of portable instruments and smear tests. Particular attention is given to the equipment pit, experimental areas and the irradiated fuel storage pits during each survey. There is an ongoing program by the Radiation Control Office and the UFTR facility staff to monitor radiation levels outside the UFTR building in the nearby vicinity.

Periodic surveys are performed to check for leakage around beam plugs and through the stacked-block reactor shield; periodic air samples are also taken and analyzed providing a check on the proper functioning of the continuous air monitoring (CAM) system which uses one or more air particulate detectors. The coolant is checked by evaporating a sample to dryness and counting with a gas flow proportional or equivalent counter.

11.1.5 Radiation Exposure Control and Dosimetry

The UFTR facility is of the modified Argonaut type, designed to minimize radiation exposure to all individuals. Since the reactor is used as a teaching tool and for research operations, a more stringent safety program has been developed to ensure radiation exposures meet the ALARA criterion; UFTR Standard Operating Procedures (SOP's) are designed to facilitate the minimization of exposure rates and to ensure the health and safety of the people in and around the facility.

11.1.5.1 Shielding

During normal operation at the l00 kWth rated power level, the shielding is sufficient for the entire “core" and activation (biological shield) sources of radiation discussed. At full-power, typical radiation levels within the reactor cell are 1 to 2 mR/hr or less.

Additional shielding is available in the form of cast concrete blocks, lead bricks, shield casks, small concrete blocks and sheet shielding materials which can be used as shielding during experiments, maintenance activities, and around activated sources. Radiation surveys are conducted for routine experiments to determine whether special shielding configurations are needed to meet the ALARA standard.

When experimental requirements necessitate operation of the reactor with a shield plug removed, strict health physics supervision is required. All such experiments are approved in advance by the Reactor Manager and the UFTR RSRS if deemed necessary based on experiment class. Adequate shielding must be provided as specified in the applicable procedures, to assure that ALARA criterion and safety considerations are satisfied.

All samples activated in the reactor are removed as specified in applicable procedures. Additional shielding in the form of lead bricks and concrete blocks is available for any activated sources removed from the exposure facilities. In addition, a hot cave with remote handling facilities is available in the radiochemistry laboratory outside the reactor cell.

11.1.5.2 Ventilation

The UFTR ventilation systems are described in FSAR Chapter 9.

11.1.5.3 Entry Control and Posting Requirements

In accordance with the regulations found in 10 CFR 20, the UFTR has multiple locations posted and controlled as radiation areas. Other areas within the UFTR are designated restricted areas. Should radiation or facility conditions change, the entry controls and postings will follow the requirements in 10 CFR 20.

11.1.5.4 Protective Clothing

Anti-contamination clothing designed to protect personnel against contamination is used and specified when recommended or required by work conditions.

11.1.5.5 UFTR Occupational Radiation Levels

Exposure measurements show that both thermal and fast neutron contributions to radiation levels in the reactor cell are typically negligible. Typical gamma radiation levels during full-power operation are shown in Table 11-5.

Table 11-5
Typical Gamma Radiation Levels in the Reactor Cell at Full-Power

Location	Typical Radiation Level (mR/hr)
Top of shield tank	15
Control Console	< 1
North ARM	1
East ARM	1
South ARM	< 1
Area just West of Rabbit system	2

11.1.5.6 Personnel Dosimetry

The UFTR provides personnel dosimetry to occupational radiation workers to ensure compliance with the dose limits of 10 CFR 20. Whole body badges are worn for this purpose with additional dosimetry such as extremity or ring badges if warranted due to the radiological conditions.

The Radiation Control Office maintains permanent records of dosimetry readings.

11.1.6 Contamination Control

Radioactive contamination is controlled at the UFTR by using standard operating procedures and radiation control techniques for radioactive contamination monitoring along with proper work methods. Routine radiation monitoring is used to detect and identify contamination. The UFTR procedures contain provisions to control contamination such as:

- Personnel are required to monitor their hands and feet for contamination when leaving contaminated areas or restricted areas that are likely contaminated.
- All personnel entering the reactor cell are required to utilize the portal monitor or hand-held frisker to check for potential contamination upon leaving the reactor cell.
- Materials, tools and equipment are surveyed for contamination before removal from contaminated areas or restricted areas where contamination is likely.
- Contaminated areas and restricted areas where contamination is likely are surveyed routinely for contamination levels.
- Potential contaminated areas are periodically monitored, consistent with the nature and quantity of the radioactive materials present.
- Radiation Work Permits (RWPs) are required to assure proper radiological protective measures are available and used during work which has actual or potential radiological hazard with its accomplishment and to provide appropriate documentation of the radiation control measures.
- Anti-contamination clothing designed to protect personnel against contamination is used and specified in the RWPs when recommended or required by work conditions.
- Contamination events are documented in reports.
- Staff are trained on the risks of contamination and on the techniques for avoiding, limiting and controlling contaminations commensurate with their risk.

11.1.7 Environmental Monitoring

The UFTR Environmental Radiological Program is conducted to ensure that the radiological environmental impact of reactor operations is as low as reasonably achievable (ALARA); it is conducted in addition to the radiation monitoring and effluents control. This program is conducted by the UFTR facility staff under the supervision of the Radiation Control Office, to monitor radiation levels in unrestricted areas surrounding the UFTR facility.

Monitoring is conducted by measuring the gamma doses at selected fixed locations, with acceptable personnel monitoring devices. The Luxel, TLDs or other radiation monitoring devices are then collected by the UFTR staff or Radiation Control personnel and evaluated monthly by a qualified processor. Typically these radiation monitoring devices show no significant indications above background for the UFTR site.

11.2 Radioactive Waste Management

11.2.1 Radioactive Waste Controls

Radioactive waste is generally considered to be any item or substance which is no longer of use to the facility and which contains, or is suspected of containing, radioactivity above the natural background radioactivity. Radioactive waste handling and shipment are addressed in D-series SOPs.

The objective of the radioactive waste management program is to ensure that radioactive waste is minimized, and that it is properly handled, stored and disposed of. The UFTR is a low power research reactor and generates very small amounts of radioactive waste.

11.2.1.1 Gaseous Waste Management

As described in Chapter 9, the design of the reactor cell ventilation systems ensure that leakage and accumulation of radioactive gases into the reactor cell is prevented by drawing air from the cell, through the reactor and out the exhaust stack.

The only gaseous radioisotope of concern produced during normal operation of the UFTR is Argon-41, classified as an effluent rather than waste. Therefore, as in many other non-power reactors, there are no special gaseous waste systems necessary at the UFTR.

11.2.1.2 Liquid Waste Management

While normal operation of the UFTR does not produce liquid radioactive wastes, liquid resulting from HVAC operation and sampling activities are routed to an aboveground tank in the Northwest corner of the reactor cell. Periodically the water is pumped to the above-ground Waste Water Holdup Tank, sized to hold 1,000 gallons of liquid and located outside the reactor building in the West fenced area. Most of the water held up in the tanks comes from the air conditioning system with a small amount coming from sampling water collected from the primary system, shielding tank, and secondary sample points. Periodic samples of the collected liquid waste are taken by the reactor staff and assayed to determine the total activity level present. If, as expected, activity levels are within acceptable levels for release, then the contents of the tank are released into the University of Florida Sanitary Sewage System.

The D-Series of UFTR Standard Operating Procedure establishes the standard protocol for the circulation, sampling, analysis and discharge of wastewater to assure releases to the sanitary sewer are within the limits set forth by the 10 CFR 20.

11.2.1.3 Solid Waste

Solid waste is typically generated at the UFTR from irradiated samples, packaging materials, contaminated gloves and clothing, used primary coolant demineralizer resin beads, filter traps on the waste water holdup tank and other similar sources. All solid wastes are collected in accordance with approved Radiation

Control techniques. These solid wastes are typically very low level. Solid wastes are periodically transferred and shipped in accordance with approved UFTR Standard Operating Procedures.

References:

11-1 Slade, D.H. Meteorology and Atomic Energy – 1968, TID-24190
11-2 UFTR S-4 Argon Measurement Surveillance completed on October 14, 2008.
11-3 Regulatory Guide 4.20
11-4 EPA 520/1-89-001
11-5 NOAA Online Climate Data Center

CHAPTER 12

CONDUCT OF OPERATIONS

Chapter 12 – Valid Pages

i	Rev. 0	11/30/2016
ii	Rev. 0	11/30/2016
12-1	Rev. 0	11/30/2016
12-2	Rev. 0	11/30/2016
12-3	Rev. 0	11/30/2016
12-4	Rev. 0	11/30/2016
12-5	Rev. 0	11/30/2016
12-6	Rev. 0	11/30/2016

TABLE OF CONTENTS

LIST OF FIGURES

12 CONDUCT OF OPERATIONS

12.1 Organization

12.1.1 Structure

The management organization of the UFTR, as shown in Figure 12-1, is structured to provide comprehensive and redundant internal oversight of reactor operations and radiation protection programs. The four levels of organizational responsibility are outlined below.

Level 1 - individuals responsible for reactor facility's licenses, charter, and site administration
Level 2 - individual responsible for reactor facility management
Level 3 - individual responsible for reactor operations and supervision of day- to-day facilities activities
Level 4 - reactor operating staff

12.1.2 Responsibility

Responsibility for the safe operation of the reactor facility is with the chain of command established in Figure 12-1. In addition to having responsibility for the policies and operation of the reactor facility, individuals at various management levels are responsible for safeguarding the public and facility personnel from undue radiation exposures, and for adhering to all requirements of the operating license and Technical Specifications. In all instances, responsibilities of one level may be assumed by designated alternates or by higher levels, conditional upon appropriate qualifications

Facility Director and Reactor Manager - They are responsible for the safe operation of the reactor, the physical protection of the facility, the scheduling and supervision of experiments using the reactor, the control of the reactor fuel, the keeping of logs and records, and the maintenance of the physical condition of the facility.

The Facility Director has line responsibility over the Reactor Manager and is directly responsible for the conduct of operations at the reactor facility. The Facility Director and the Reactor Manager select operator-technicians and supervise training. The Reactor Manager enforces operating procedures and regulations and has the power to authorize operations in accordance with facility procedures. The Facility Director may act for the Reactor Manager position.

The Reactor Manager has direct day-to-day supervision over the operation, maintenance and record keeping of the UFTR. The Reactor Manager is advised by the Facility Director, the Reactor Safety Review Subcommittee, the Radiation Control Officer and the Radiation Control Committee. The Reactor Manager is appointed by the Facility Director and is qualified in experimental reactor physics and has qualifying experience in reactor operations.

Senior Reactor Operator - Senior Reactor Operator reports to the Reactor Manager and is responsible for directing the activities of Reactor Operators and trainees.

Reactor Operator - Reactor Operators report to the Senior Reactor Operator and are primarily involved in the manipulation of reactor controls, monitoring of instrumentation, and operation and maintenance of reactor related equipment.

Radiation Control Committee (RCC) - The RCC reports to the Director of Environmental Health and Safety to assure radiological safety of all University personnel and the public, to assure that ionizing and non-ionizing radiation sources are procured and used in accordance with Federal and State regulations, and to assure that radiation exposures are as low as reasonably achievable.

Reactor Safety Review Subcommittee (RSRS) - The Reactor Safety Review Subcommittee reports directly to the Radiation Control Committee and provides an independent review and audit of the safety aspects of reactor facility operations for the University of Florida Training Reactor.

12.1.3 Staffing

1. The minimum staffing when the reactor is in MODES 1, 2, or 3 shall be:

    a. An operator in the control room;

    b. A designated second person present at the facility complex able to carry out prescribed written instructions; and

    c. A designated senior operator shall be readily available on call. "Readily Available on Call" means an individual who:

        i. has been specifically designated and the designation known to the operator on duty;

        ii. can be rapidly contacted by phone or other means of communication available to the operator on duty; and

        iii. is capable of getting to the reactor facility within 30 minutes under normal conditions.

2. A list of reactor facility personnel by name and telephone number shall be readily available in the control room for use by the operator. The list shall include:

    a. Management personnel,

    b. Radiation control personnel, and

    c. Other operations personnel.

3. Events requiring the presence at the facility of a senior operator are:

    a. All CORE ALTERATIONS,

    b. Initial startup and approach to power,

    c. Relocation of any EXPERIMENT with reactivity worth greater than 720 pcm,

    d. Recovery from UNSCHEDULED SHUTDOWN, and

    e. During movement of concrete block shielding over top of the core in MODE 5.

12.1.4 Selection and Training of Personnel

The selection and training of licensed operations personnel should be in accordance with the American National Standard, ANSI/ANS-15.4-1988, Selection and Training of Personnel for Research Reactors.

12.1.5 Radiation Safety

The Radiation Control Officer is responsible for implementation of the radiation protection program. Additional detail is provided in Chapter 11.

12.2 Reactor Safety Review Subcommittee

Independent review and audit of the safety aspects of UFTR operations are conducted by the RSRS.

12.2.1 RSRS Rules

RSRS functions shall be conducted in accordance with the following charter:

(1) At least one meeting shall be held annually. Meetings may be held more frequently as circumstances warrant, consistent with the effective monitoring of facility operations as determined by the RSRS Chair.

(2) The RSRS Chair shall ensure meeting minutes are reviewed, approved, and submitted in a timely manner.

(3) A quorum shall consist of at least three members where the operating staff does not constitute a majority.

12.2.2 RSRS Composition and Qualifications

(1) The RSRS shall be composed of a minimum of three members with expertise in reactor technology and/or radiological safety.

(2) Members of the RSRS shall be appointed by the Chair of the Radiation Control Committee (RCC).

(3) Qualified and approved alternates may serve in the absence of regular members.

12.2.3 RSRS Review Function

The following items shall be reviewed:

(1) Changes performed under 10 CFR 50.59;

(2) New procedures and major revisions of existing procedures having safety significance;

(3) Proposed changes to a SSC having safety significance;

(4) Proposed changes in Technical Specifications or license;

(5) Violations of Technical Specifications or license;

(6) Violations of procedures having safety significance;

(7) Operating abnormalities having safety significance;

(8) Reportable occurrences;

(9) Audit reports.

12.2.4 RSRS Audit Function

The following items shall be audited:

(1) Facility operations for conformance to the Technical Specifications and applicable license conditions, annually;

(2) The retraining and requalification program for the operating staff, biennially;

(3) The results of action taken to correct deficiencies in reactor SSCs or methods of operations that affect reactor safety, annually; and

(4) The emergency plan and emergency implementing procedures, biennially.

A report of audit findings shall be submitted to the Dean of the College of Engineering and RSRS members within three months after the audit has been completed.

12.3 Procedures

The UFTR facility shall be operated in accordance with approved written procedures. Operating procedures shall be in effect for the following items:

(1) Normal startup, operation and shutdown of the reactor;

(2) Fuel loading, unloading, and movement within the reactor;

(3) Maintenance of major components of systems that could have an effect on reactor safety;

(4) Surveillances and inspections required by the Technical Specifications or those that may have an effect on reactor safety;

(5) Personnel radiation protection, consistent with applicable regulations. The procedures shall include management commitment to maintain exposures as low as reasonably achievable (ALARA);

(6) Administrative controls for operations and maintenance and for the conduct of irradiations and experiments that could affect reactor safety or core reactivity;

(7) Implementation of the Emergency Plan and security procedures; and

(8) Procedures for the use, receipt, and transfer of by-product material, if appropriate.

Changes to the above procedures shall be made only after review by the RSRS and approval by the Facility Director.

12.4 Required Actions

This is covered in the UFTR Technical Specifications.

12.5 Reports

This is covered in the UFTR Technical Specifications.

12.6 Records

This is covered in the UFTR Technical Specifications.

12.7 Emergency Planning

Emergency planning for the UFTR facility is described in the "UFTR Emergency Plan" and in the facility Standard Operating Procedures. These documents detail the responsibilities, procedures, and actions to be taken by all personnel in the event of emergency conditions.

12.8 Security Planning

The plans for security measures and physical protection of the UFTR facility are described in the F-Series of Standard Operating Procedures.

12.9 Quality Assurance

Quality Assurance measures can be found throughout the operating and health physics procedures as well as UFTR SOP-0.5, Quality Assurance Program.

12.10 Operator Training and Requalification

The UFTR Training and Requalification Program, as described in the Operator Requalification and Recertification Training Program Plan, has been submitted to the NRC under separate cover.

12.11 Startup Plan

The UFTR is an already operating facility as presented for license renewal, an initial test program is not considered to be applicable.

12.12 Environmental Report

No changes implemented in the UFTR since 1982 have had an adverse affect on the environmental impact of continued UFTR operations.

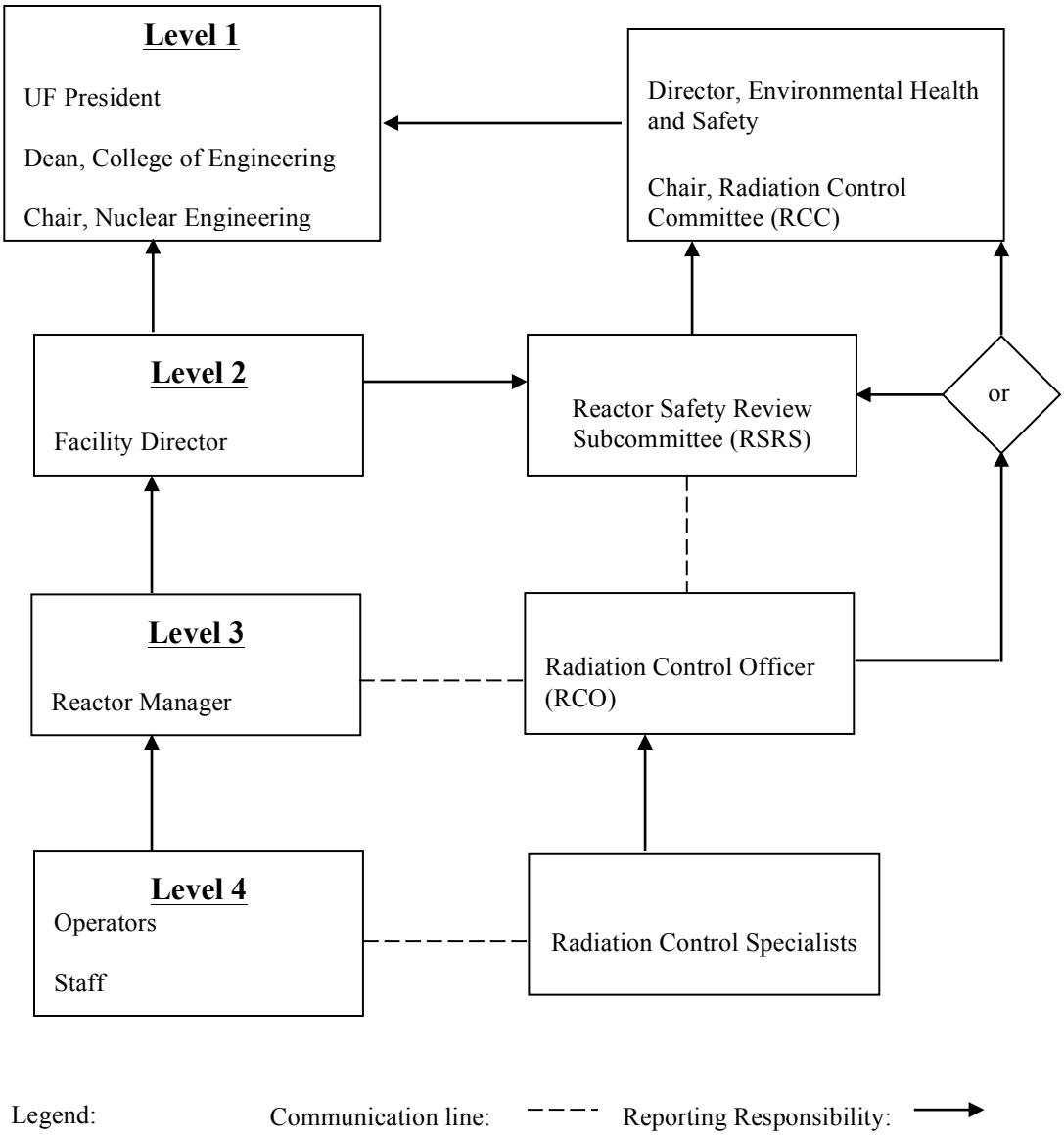

Figure 12-1 UFTR Organizational Chart

CHAPTER 13

ACCIDENT ANALYSES

Chapter 13 – Valid Pages

i	Rev. 0	11/30/2016
ii	Rev. 0	11/30/2016
13-1	Rev. 0	11/30/2016
13-2	Rev. 0	11/30/2016
13-3	Rev. 0	11/30/2016
13-4	Rev. 0	11/30/2016
13-5	Rev. 0	11/30/2016
13-6	Rev. 0	11/30/2016
13-7	Rev. 0	11/30/2016
13-8	Rev. 0	11/30/2016
13-9	Rev. 0	11/30/2016
13-10	Rev. 0	11/30/2016
13-11	Rev. 0	11/30/2016
13-12	Rev. 0	11/30/2016
13-13	Rev. 0	11/30/2016
13-14	Rev. 0	11/30/2016
13-15	Rev. 0	11/30/2016
13-16	Rev. 0	11/30/2016
13-17	Rev. 0	11/30/2016
13-18	Rev. 0	11/30/2016

TABLE OF CONTENTS

LIST OF TABLES

LIST OF FIGURES

13.0 ACCIDENT ANALYSES

13.1 Introduction

This chapter analyzes postulated infrequent and abnormal scenarios in which the UFTR could be expected to exceed its normal range of operating parameters. The likelihood of such events is addressed, and, where applicable, the consequences evaluated.

These analyses have been compared (where applicable) to the normal dose limits presented in 10 CFR 20. This highlights a distinct difference between the UFTR and testing reactor facilities which are generally compared and subject to the significantly higher accident dose limits of 10 CFR 100. Though normal dose limits of 10 CFR 20 are used, and this analysis demonstrates there are no credible events which result in exceeding normal dose limits, the term "accident" will be used throughout this Chapter to be consistent with the terminology presented in NUREG-1537 (Ref. 13.9).

These analyses show that there is no credible event at the UFTR facility that would cause major damage to the reactor or pose any risk to the health and safety of the public. Based on this, the UFTR is a negligible risk research reactor and there are no systems or components associated with the UFTR that warrant a safety-related classification.

13.1.1 Postulated Accidents

NUREG 1537, Part 1 (Ref. 13.9) details nine categories for credible accidents:

1. Maximum hypothetical accident (MHA)
2. Insertion of excess reactivity
3. Loss of coolant (LOCA)
4. Loss of flow
5. Mishandling or malfunction of fuel (FHA, fuel handling accident)
6. Experiment malfunction
7. Loss of normal electrical power
8. External events
9. Mishandling or malfunctioning of equipment

This chapter provides accident analyses that are categorized into one or more of the nine groups. All of these categories are discussed in the following sections, except the loss of normal electrical power. This event is discussed in Chapter 8 of the FSAR. Some categories are discussed together (e.g. the MHA and FHA) because they are similar events analyzed with equivalent methodologies.

13.2 Initiating Events and Scenarios, Accident Analysis, and Determination of Consequences

13.2.1 Maximum Hypothetical Accident (MHA) and Fuel Handling Accident (FHA)

The most hazardous accident scenario for the UFTR involves the release of fission products into the reactor cell due to severe mechanical damage to a fuel element. This MHA is presented to bound all credible accidents and to illustrate the consequences of an accidental release of radioactive material. A less severe, but more likely event involves the mishandling of fuel resulting in cladding damage: the FHA.

13.2.1.1 Initiating Events and Scenarios

The MHA for the UFTR is an event in which the core is assumed to be severely crushed in either the horizontal or vertical direction by a postulated 4,500 lb concrete shield block dropped directly onto the core. This could cause the release of noble gases and halogen fission products into the air. This event possesses an extremely remote possibility of occurring. Still, the assumption is made that dropping the concrete shield block would result in maximum mechanical damage to the fuel and the worst-case event fission product release. Because of these factors, this event meets qualifications for the MHA as defined in NUREG-1537 and is studied in the subsequent analysis.

The FHA scenario assumes that one irradiated fuel element is damaged during a core offload or reload, fuel inspection, or other irradiated fuel handling operation. Fuel handling operations allow moving only one bundle at a time and are designed to ensure that fuel handlers are constantly shielded from the irradiated fuel assembly. The FHA is considered the most limiting credible accident for the UFTR and therefore it is used as the accident basis for Emergency Planning purposes.

The following data and assumptions are used to evaluate the source terms associated with these accidents:

1. The reactor is operated continuously at 100 kW steady-state power for 30 days (72,000 kW-hrs) before it is shutdown preceding the event.
2. The fuel bundle with highest power is selected for evaluation (bundle 2-3 in the 22 bundle core). The power in these calculations is 5.44 kW as described in Chapter 4.
3. Radioisotope inventories are calculated three days after shutdown from power operation, the shortest time allowed before the concrete blocks can be removed after shutdown.
4. Since the primary water is often drained from the core immediately after shutdown, any fission product release during an accident is conservatively assumed to be directly to the air of the reactor cell.
5. The radioisotopes of greatest significance for release are radioiodine and the noble gases, krypton and xenon.
6. For the MHA, it is postulated that core damage would be sufficient to expose fuel surface areas equivalent to stripping all the cladding from one face of one fuel plate (Ref. 13.1). It is further assumed that 100% of the gaseous activity is produced within the recoil range of the fission fragments (1.37E-03 cm), or 0.19% of the total gaseous activity

instantaneously escapes from the exposed fuel surfaces into the reactor cell (Ref. 13.1). This is a very conservative estimate given the low fuel temperature and the fact that not all fission gases would move out of the fuel and occupy the full volume of the recoil range within the aluminum clad.

7. For the FHA, it is postulated that the irradiated fuel element failure would be sufficient to split the fuel bundle into two pieces exposing a fuel surface area equivalent to a guillotine type break (widthwise) of all 14 fuel plates. It is further assumed that 100% of the gaseous activity produced within the recoil range of the fission fragments (1.37E-03 cm), or 4.57E-03% of the total gaseous activity, instantaneously escapes from the exposed fuel surfaces into the reactor cell (Ref. 13.1). This is a conservative estimate given the low fuel temperature and the fact that not all fission gases would move out of the fuel and occupy the full volume of the recoil range within the aluminum clad.

13.2.1.2 Analysis and Determination of Consequences

13.2.1.2.1 Radionuclide Inventories

Radionuclide inventories for the highest power fuel element were calculated using the ORIGEN-S code (Ref. 13.8) under the assumptions in Section 13.2.1.1.

Activities of the krypton, iodine, and xenon isotopes for the highest power element are given in Table 13-1 along with the inventory that is assumed to escape from the damaged fuel into the air of the reactor cell.

Table 13-1 Calculated Radionuclide Inventories (Ci) Three Days after Shutdown

Isotope	Highest Power Fuel Element (Ci)	MHA 0.192% of Highest Power Fuel Element (Ci)	FHA 4.57E-03% of Highest Power Fuel Element (Ci)
Kr-85	9.167E-02	1.76E-04	4.19E-06
Kr-85m	9.289E-04	1.78E-06	4.24E-08
Kr-88	3.868E-06	7.42E-09	1.77E-10
I-129	9.897E-08	1.90E-10	4.52E-12
I-130	1.748E-04	3.35E-07	7.98E-09
I-131	1.002E+02	1.92E-01	4.58E-03
I-132	1.090E+02	2.09E-01	4.98E-03
I-133	2.972E+01	5.70E-02	1.36E-03
I-135	1.486E-01	2.85E-04	6.79E-06
Xe-133	2.499E+02	4.80E-01	1.14E-02
Xe-133m	1.989E+00	3.82E-03	9.08E-05
Xe-135	4.151E+00	7.96E-03	1.90E-04
Xe-135m	1.523E-02	2.92E-05	6.96E-07

13.2.1.2.2 Dose Calculations

Doses were calculated for the most exposed member of the public and for facility staff. Occupational exposure limits are discussed in 10 CFR 20.1201 and public exposure limits are discussed in 10 CFR 20.1301.

For occupational dose limits, Section 20.1201 limits are as follows: An annual limit of the total effective dose equivalent (TEDE) of 5 rem, or the sum of the deep-dose equivalent (DDE) and committed dose equivalent (CDE) to any individual organ or tissue, other than the lens of the eye, equal to 50 rem.

In addition, Section 20.1201 places limits on the exposure to the lens of the eye and the skin of the whole body and extremities. However, of the isotopes present in the inventory at the initiation of the accident, the only contribution to the skin dose is from Kr-85 according to Federal Guidance Report No. 11. Thus, it is reasonable to assume that the most limiting case for the occupational dose assessment is either the 5 rem limit for TEDE or the 50 rem limit for the sum of the DDE and CDE for an individual organ.

For the public dose limits, the Section 20.1301 limit of concern is as follows: The total effective dose equivalent to individual members of the public from licensed operation is limited to 0.1 rem in a year.

13.2.1.2.3 Occupational Exposure

The location of the accident is inside the reactor cell which represents the immediate surroundings of the reactor.

The following assumptions were used in this analysis:

1. The fission product release is uniformly dispersed within the volume of the reactor cell.
2. The free air volume of the reactor cell is conservatively calculated to be 36,000 ft^3 (30'x60'x20' = 36,000 ft^3)
3. The breathing rate is 3.33E-04 m^3/s (Ref. 13.10)
4. Dose coefficients are taken from Federal Guidance Reports No. 11 and 12. (Ref. 13.10 and 13.11)

Dose results are given as a dose rate, which can be used to assess the evacuation and reentry of facility staff in the event of an accident. Dose conversion factors used to calculate thyroid and TEDE doses for the occupational exposures are shown in Table 13-2. The values are obtained from Ref. 13.10 and Ref. 13.11.

Table 13-2 Dose Conversion Factors

Isotope	DDE_{eff} Dose Coefficient ($Sv\text{-}m^3/Bq\text{-}s$)	CEDE Dose Coefficient (Sv/Bq)	DDE_{thy} Dose Coefficient ($Sv\text{-}m^3/Bq\text{-}s$)	CDE_{thy} Dose Coefficient (Sv/Bq)
Kr-85	1.19E-16		1.18E-16	
Kr-85m	7.48E-15		7.33E-15	
Kr-88	1.02E-13		1.03E-13	
I-129	3.80E-16	4.69E-8	3.86E-16	1.56E-6
I-130	1.04E-13	7.14E-10	1.04E-13	1.99E-8
I-131	1.82E-14	8.89E-9	1.81E-14	2.92E-7
I-132	1.12E-13	1.03E-10	1.12E-13	1.74E-9
I-133	2.94E-14	1.58E-9	2.93E-14	4.86E-8
I-135	7.98E-14	3.32E-10	8.01E-14	8.46E-9
Xe-133	1.56E-15		1.51E-15	
Xe-133m	1.37E-15		1.36E-15	
Xe-135	1.19E-14		1.18E-14	
Xe-135m	2.04E-14		2.04E-14	

Calculated TEDE and thyroid doses for the occupational exposures for the MHA and FHA are shown in Tables 13-3 and 13-4. Exposure is given as dose rate in rem per hour and the exposure received over a 5-minute period. A period of 5 minutes is considered a reasonable time for a worker in the reactor cell to evacuate the cell in event of an accident.

Table 13-3 Summary of Occupational Radiological Exposure for the MHA

Location	Thyroid Dose		TEDE Dose	
	Rate (rem/hr)	5 Minute Exposure (rem)	Rate (rem/hr)	5 Minute Exposure (rem)
Inside Reactor Cell	258.6	21.55	8.316	0.693

Table 13-4 Summary of Occupational Radiological Exposure for the FHA

Location	Thyroid Dose		TEDE Dose	
	Rate (rem/hr)	5 Minute Exposure (rem)	Rate (rem/hr)	5 Minute Exposure (rem)
Inside Reactor Cell	6.154	0.513	0.198	0.016

Exposures in both accident scenarios are less than the annual occupational dose limits. For the case of the FHA, several hours of exposure may occur before the doses would approach the occupational dose limits. This time period is sufficiently long to provide for safe response and removal of an injured staff member if needed.

13.2.1.2.4 Public Exposure

As described in Chapter 9 of the UFTR FSAR, the design of the reactor cell HVAC and core vent system ensures that leakage from the reactor cell and accumulation of radionuclides in the reactor cell is prevented by drawing air from the cell, through the core vent system, and out the exhaust stack where it is monitored and diluted. This ensures that any potential accumulation of radionuclides in the reactor cell resulting from a postulated accident is directed out the exhaust stack where they will be diluted and better dispersed.

Postulated doses to the most exposed member of the public from the radioactive plume can be estimated, assuming the reactor stack as the release point, for the FHA and MHA scenarios using the NRC endorsed computer code COMPLY at Level 3 (Ref. 13.14). The source terms for these postulated accidents are discussed earlier and tabulated in Table 13-1.

The following assumptions are used in this analysis:

1. Locations outside the reactor building are exposed to a fractional release of the total iodines due to plating out of iodines inside the reactor cell and reactor ventilation components. The portion available for release outside of the reactor cell is conservatively assumed to be 25% (Ref. 13.13).
2. The most exposed member of the public is conservatively assumed to continuously occupy a location 10 meters away from the UFTR stack outside of a building or shelter of any type. This is the approximate ground level distance from the base of the stack to the closest walking path which is located in the unrestricted area just east of the reactor building.
3. The most exposed member of the public is conservatively assumed to get all their meat, milk, and vegetables from on-campus gardens and farms.
4. Following the accident, no credit is taken for radiological decay during holdup in the reactor cell prior to release through the stack.
5. At Level 3 the COMPLY code assumes the wind is in the direction of the receptor 25% of the year. To account for a shorter duration release where the wind is assumed to be in the direction of the receptor 100% of the time, the COMPLY results will be multiplied by 4.

Using the COMPLY computer code the maximum postulated TEDE received by the most exposed member of the general public due to the radioactive plume is estimated. The results of calculating this annual TEDE for the MHA and FHA are given in Table 13-5.

Table 13-5 Maximum Postulated Plume Exposure for the MHA and FHA

	TEDE (mrem/year)	
Most Exposed Location	MHA	FHA
10 meters from reactor stack	24.0	0.4

Postulated doses to the most exposed member of the public from gamma radiation shine can be estimated, assuming the reactor cell is a volumetric source (i.e. gamma shine from the building), for the FHA and MHA scenarios using the computer code MicroShield (Ref. 13.17). The source terms for these postulated accidents are discussed earlier and tabulated in Table 13-1.

The following assumptions are used in this analysis:

1. The most exposed member of the public is conservatively assumed to continuously occupy a location directly against the eastern outer wall of the reactor cell.
2. The free air volume of the reactor cell is conservatively assumed to be 36,000 ft^3 and configured such that the total radioisotope inventory released into the reactor cell is compressed into the eastern two-thirds of the reactor cell (i.e. closest to the most exposed member of the public).
3. The reactor cell eastern wall is assumed to be 1.0 ft thick poured concrete.
4. Following the postulated accident, no credit is taken for radiological decay during holdup in the reactor cell or for radionuclide release through the stack.
5. No credit is taken for shielding effects provided by the earth or by the structures within the reactor cell.

Using the MicroShield computer code the maximum postulated TEDE received by the most exposed member of the general public due to gamma shine is estimated. The results of calculating this annual TEDE for the MHA and FHA are given in Table 13-6.

Table 13-6 Maximum Postulated Shine Exposure for the MHA and FHA

	TEDE (mrem/hr)	
Most Exposed Location	MHA	FHA
Against the eastern wall of the reactor cell	2.011E-1	4.792E-3

Combining the postulated plume and shine exposures for the MHA, the most exposed member of the public could occupy the space continuously for over two weeks before reaching the annual limit of 0.1 rem. For the case of the FHA, the most exposed member of the public could continuously occupy the space for the entire year and still never approach the annual limit.

The FHA is the most limiting credible accident and therefore it is used as the accident basis Emergency Planning purposes. The analysis results show that in the event of a FHA the appropriate accident control strategy is to evacuate and secure the entire reactor building. The FHA analysis also shows that the need for evacuation of larger areas is unnecessary since there are no credible accident scenarios that lead to exposures exceeding the normal 10 CFR 20 TEDE limit of 0.1 rem/year for any individual beyond the operations boundary. Although not expected to be needed, the Emergency Plan includes provisions for the University Police Department to evacuate and secure larger areas if desired.

13.2.2 Insertion of Excess Reactivity

13.2.2.1 Initiating Events and Scenarios

Limits are placed on moveable experiments in the UFTR Standard Operating Procedures (SOPs) to ensure an experiment cannot be inserted or removed from the core region unless all control blades are inserted or its absolute reactivity worth is less than that which would cause a positive 20-second stable reactor period. A reactivity worth of roughly 250 pcm is necessary to cause a positive 20-second stable reactor period.

This means that under normal procedures, no moveable experiment can be used in such a way as to make the reactor prompt critical. This analysis postulates the abnormal event where either the operator violates the SOP limits, an uncontrolled rod withdrawal (URW) event occurs, or some other event transpires that results in a large excess reactivity insertion, initiating a prompt critical power excursion. For brevity, any postulated event of this type will be referred to as an URW event.

The severity of the event is measured by the rise in the temperature of the fuel element. If the maximum temperature remains below the fuel and clad temperature Safety Limit of 530 ºC, a given reactivity insertion is incapable of compromising the integrity of the fuel element through blistering, and thus no damage to reactor elements or release of radionuclides is possible.

13.2.2.2 Analysis and Determination of Consequences

To evaluate these scenarios, analysis was performed using the coupled reactor kinetics-hydraulics codes, RELAP5-3D and PARET/ANL.

Using RELAP5-3D (RELAP) an URW analysis was performed for both protected and un-protected transients. The MCNP model described in Chapter 4 of the UFTR SAR was used to calculate the reactor kinetics parameters, feedback coefficients, and power profiles used in the RELAP & PARET models. Tables 4-3 and 4-9 list a summary of the parameters for BOL and EOL used for the analysis. To adequately quantify the effects of a URW event, a bounding analysis was performed at BOL and EOL including initial conditions that encompasses a wide range of operating regimes.

Tables 13.7 – 13.8 demonstrate a URW event in which the most reactive blade is withdrawn over a 100 second interval. The highest peak power reached was for Case 9 (EOL, 1W, 30gpm, Tin=60F). In all cases the maximum Fuel Cladding temperature (~126C) was well below the 530C safety limit.

Tables 13.9 – 13.10 demonstrate a URW event with a 74 pcm/sec reactivity insertion rate. No protective actions were used. The highest peak power reached was for Case 30 (EOL, 1W, 50gpm, Tin=60F). In all cases the maximum Fuel Cladding temperature (~191C) was well below the 530C safety limit.

In all cases the reactor transients are terminated by the feedback mechanisms, i.e. fuel temperature and void coefficients of reactivity, inherent to the UFTR design before a safety limit is reached.

To demonstrate the effects of the reactor protection system (RPS) on these transients, two conservative trips were added. Tables 13.11 – 13.12 show the effects of 4 different reactivity insertion rates (2$, 1480pcm total) at the most limiting conditions at BOL and EOL from Tables 13-9 and 13-10. For cases other than the prompt reactivity insertion (0.5 sec), the transients are terminated by either the period or high flux reactor trips well below the 530C safety limit. The prompt reactivity insertion transients are terminated by the feedback mechanisms inherent to the UFTR design before the safety limit is reached.

Both the period and high flux trips gravity dump the coolant moderator in addition to gravity dropping of the control blades. The effect on fuel temperature from gravity dumping of the coolant moderator is described by the LOCA analyses later in SAR Section 13.2.3. The LOCA analyses show the upper bound on fuel temperature rise due to decay heat following a coolant dump is 14C. When a 14C increase is added to the RELAP5-3D results the temperatures still remain below the safety limit.

The tables are shown on the following pages.

Table 13.7 RELAP - 100 Sec 2.66$ insertion

Core	BOL – 22 bundle							
	1	2	3	4	5	6	7	8
P_o (kW) (at max decay heat)	1.00E-05	1.00E-05	1.00E-05	1.00E-05	100	100	100	100
Initial Condition	50 gpm, T_{in}=60°F	30 gpm, T_{in}=60°F	30 gpm, T_{in}=160°F	50 gpm, T_{in}=160°F	50 gpm, T_{in}=60°F	30 gpm, T_{in}=60°F	30 gpm, T_{in}=160°F	50 gpm, T_{in}=160°F
Blade Trip Setpoint (kW)	N/A	N/A	N/A	N/A	N/A	N/A	N/A	N/A
Blade Drop Time (s)	N/A	N/A	N/A	N/A	N/A	N/A	N/A	N/A
Time to Peak Power (s)	25	25.1	24.8	24.8	43	54.4	20.1	67.5
Peak Power (kW)	3088.9	3093.8	2500.7	2501.2	1778.1	798.6	439.3	598.7
$T_{fuel,max}$ at Peak Power (°C)	118.9	119.3	116.6	116.7	112.2	109.6	106.5	107.1
$T_{fuel,max}$ (°C)	123.4	121.5	126.2	125.0	112.9	110.6	106.6	107.3
$T_{clad,max}$ (°C)	123.4	121.5	126.1	124.7	112.8	110.6	106.6	107.3
$T_{cool,max}$ (°C)	110.4	111.3	114.9	115.4	108.6	107.6	104.4	103.7

Table 13.8 RELAP - 100 Sec 2.66$ insertion

Core	EOL – 22 bundle							
	9	10	11	12	13	14	15	16
P_o (kW) (at max decay heat)	1.00E-05	1.00E-05	1.00E-05	1.00E-05	100	100	100	100
Initial Condition	50 gpm, T_{in}=60°F	30 gpm, T_{in}=60°F	30 gpm, T_{in}=160° F	50 gpm, T_{in}=160° F	50 gpm, T_{in}=60°F	30 gpm, T_{in}=60°F	30 gpm, T_{in}=160° F	50 gpm, T_{in}=160°F
Blade Trip Setpoint (kW)	N/A	N/A	N/A	N/A	N/A	N/A	N/A	N/A
Blade Drop Time (s)	N/A	N/A	N/A	N/A	N/A	N/A	N/A	N/A
Time to Peak Power (s)	25.1	25.1	24.9	24.9	43.1	53.6	20	67.7
Peak Power (kW)	3107.0	3097.7	2499.0	2506.4	1698.7	797.4	442.4	591.0
$T_{fuel,max}$ at Peak Power (°C)	119.3	119.2	116.8	116.8	111.9	110.0	106.6	107.0
$T_{fuel,max}$ (°C)	123.6	137.1	128.3	123.9	112.9	110.6	106.6	107.3
$T_{clad,max}$ (°C)	123.5	137.0	128.3	123.8	112.8	110.6	106.5	107.3
$T_{cool,max}$ (°C)	111.6	111.4	115.7	116.4	108.6	107.6	104.4	103.7

Table 13.9 RELAP - 74pcm/s insertion – 1,480 pcm (2$) Total

Core	BOL – 22 bundle							
	20	21	22	23	24	25	26	27
P_o (kW) (at max decay heat)	1.00E-05	1.00E-05	1.00E-05	1.00E-05	100	100	100	100
Initial Condition	50 gpm, T_{in}=60°F	30 gpm, T_{in}=60°F	30 gpm, T_{in}=160° F	50 gpm, T_{in}=160° F	50 gpm, T_{in}=60°F	30 gpm, T_{in}=60°F	30 gpm, T_{in}=160° F	50 gpm, T_{in}=160° F
Blade Trip Setpoint (kW)	N/A	N/A	N/A	N/A	N/A	N/A	N/A	N/A
Blade Drop Time (s)	N/A	N/A	N/A	N/A	N/A	N/A	N/A	N/A
Time to Peak Power (s)	11.49	11.5	11.42	11.41	10.57	10.59	10.02	9.98
Peak Power (kW)	9753.9	9780.1	8184.2	8155.2	1778.8	1657.0	963.2	1050.8
$T_{fuel,max}$ at Peak Power (°C)	135.0	135.1	128.8	128.6	113.9	113.4	114.1	114.9
$T_{fuel,max}$ (°C)	153.9	135.1	171.8	170.8	129.9	117.6	114.2	114.9
$T_{clad,max}$ (°C)	153.8	133.7	171.8	170.8	129.8	117.4	114.0	114.8
$T_{cool,max}$ (°C)	130.8	116.5	145.7	121.4	113.1	111.1	109.2	109.6

Table 13.10 RELAP - 74pcm/s insertion – 1,480 pcm (2$) Total

Core	EOL – 22 bundle							
	30	31	32	33	34	35	36	37
P_o (kW) (at max decay heat)	1.00E-05	1.00E-05	1.00E-05	1.00E-05	100	100	100	100
Initial Condition	50 gpm, T_{in}=60°F	30 gpm, T_{in}=60°F	30 gpm, T_{in}=160°F	50 gpm, T_{in}=160°F	50 gpm, T_{in}=60°F	30 gpm, T_{in}=60°F	30 gpm, T_{in}=160°F	50 gpm, T_{in}=160°F
Blade Trip Setpoint (kW)	N/A	N/A	N/A	N/A	N/A	N/A	N/A	N/A
Blade Drop Time (s)	N/A	N/A	N/A	N/A	N/A	N/A	N/A	N/A
Time to Peak Power (s)	11.53	11.53	11.45	11.45	10.59	27.09	10	10.03
Peak Power (kW)	9811.6	9805.6	8179.8	8181.2	1775.2	5286.4	967.2	1047.9
$T_{fuel,max}$ at Peak Power (°C)	135.1	135.1	128.6	128.8	113.8	121.4	114.1	114.8
$T_{fuel,max}$ (°C)	191.8	135.1	170.9	171.9	131.7	122.7	114.2	114.9
$T_{clad,max}$ (°C)	191.6	133.7	170.9	171.9	131.4	122.1	114.0	114.8
$T_{cool,max}$ (°C)	132.1	116.4	143.7	141.0	113.2	112.1	109.2	109.7

Table 13.11 RELAP – BOL – 22 bundle

Core								
	40	**41**	**42**	**43**	**44**	**45**	**46**	**47**
P_o (kW) (at max decay heat)	1.00E-05	1.00E-05	1.00E-05	1.00E-05	100	100	100	100
Initial Condition	30 gpm, T_{in}=60°F	30 gpm, T_{in}=60°F	30 gpm, T_{in}=60°F	30 gpm, T_{in}=60°F	30 gpm, T_{in}=60°F	30 gpm, T_{in}=60°F	30 gpm, T_{in}=60°F	30 gpm, T_{in}=60°F
Reactivity Insertion Rate (pcm/s)	37	74	148	Prompt	37	74	148	Prompt
Blade Trip Setpoint (kW)	120	120	120	120	120	120	120	120
Period Trip Setpoint (s)	1	1	1	1	1	1	1	1
Blade Drop Time (s)	3	3	3	3	3	3	3	3
Time to Peak Power (s)	14.71	8.12	4.85	0.837	5.79	4.46	3.78	0.535
Peak Power (kW)	0.096	0.059	0.153	169,481	164	235	677	152,232
$T_{fuel,max}$ at Peak Power (°C)	15.6	15.6	15.6	345.4	36.0	38.0	51.6	332.6
$T_{fuel,max}$ (°C)	15.6	15.6	15.6	493.8	36.0	38.1	52.1	487.1
$T_{clad,max}$ (°C)	15.6	15.6	15.6	491.9	36.0	38.0	52.0	485.6
$T_{cool,max}$ (°C)	15.6	15.6	15.6	108.7	24.5	24.1	26.8	109.8

Table 13.12 RELAP – EOL – 22 bundle

Core								
	50	**51**	**52**	**53**	**54**	**55**	**56**	**57**
P_o (kW) (at max decay heat)	1.00E-05	1.00E-05	1.00E-05	1.00E-05	100	100	100	100
Initial Condition	50 gpm, T_{in}=60°F	50 gpm, T_{in}=60°F	50 gpm, T_{in}=60°F	50 gpm, T_{in}=60°F	50 gpm, T_{in}=60°F	50 gpm, T_{in}=60°F	50 gpm, T_{in}=60°F	50 gpm, T_{in}=60°F
Reactivity Insertion Rate (pcm/s)	37	74	148	Prompt	37	74	148	Prompt
Blade Trip Setpoint (kW)	120	120	120	120	120	120	120	120
Period Trip Setpoint (s)	1	1	1	1	1	1	1	1
Blade Drop Time (s)	3	3	3	3	3	3	3	3
Time to Peak Power (s)	3.0	3.0	3.0	0.848	3.0	3.0	3.0	0.538
Peak Power (kW)	0.001	0.002	0.009	164,827	134	190	619	148,912
$T_{fuel,max}$ at Peak Power (°C)	15.6	15.6	15.6	338.8	31.0	33.9	49.8	327.7
$T_{fuel,max}$ (°C)	15.6	15.6	15.6	487.1	31.0	34.0	50.2	459.7
$T_{clad,max}$ (°C)	15.6	15.6	15.6	485.6	31.0	34.0	50.1	457.9
$T_{cool,max}$ (°C)	15.6	15.6	15.6	109.8	21.2	21.9	25.7	107.8

A prompt insertion analysis was also performed using PARET-ANL, a coupled reactor kinetics-hydraulics code from Argonne National Lab. PARET-ANL is validated with experimental data for reactivity insertions on water-cooled, plate-type reactors obtained in the SPERT tests (Refs. 13.2 and 13.3). The analyses done with the SPERT type reactors are well matched to the UFTR because they are of a similar design (plate-type fuel and water moderated) and power level.

Obenchain (Ref. 13.15) validates the PARET-ANL code against experimental data from tests on the high-enriched, plate-type SPERT III C-core. Additionally, Chatzidakis *et al.* (Ref. 13.16), in a more extensive analysis of the DNB correlations used in PARET, show that agreement within 50% can be expected when using the Tong correlation for DNB heat transfer. The uncertainties associated with the input parameters (i.e. reactivity coefficients) allows for an additional 50% error. This implies that for this analysis, using the propagation of uncertainties method, an error of up to 70% for the increase in fuel temperature must be accounted for.

The UFTR is modeled in PARET-ANL using the hottest channel from the 22 fuel bundle core, split into twenty axial nodes from the bottom to the top of the channel and ten radial nodes from the center of the fuel plate to the center of the channel. The reactor is assumed not to trip and the reactor initial condition is conservatively assumed to at the steady-state power of 100 kW and minimum flow rate of 34 gallons per minute. All geometry and neutronics properties used are discussed in Chapter 4, with the addition of the delayed neutron constants listed in Table 13-13 which are calculated with the MCNP5 model and inputted into the PARET-ANL model.

Table 13-13 Delayed Neutron Constants Used in PARET-ANL Model

Delayed Group	Fraction (β_i/β)	Decay Constant (λ_i) [s^{-1}]
1	0.03256	0.01249
2	0.1655	0.03181
3	0.1628	0.1094
4	0.4576	0.3172
5	0.1343	1.353
6	0.04749	8.654

The fuel temperature coefficient of reactivity is also calculated with the MCNP5 model described in Chapter 4 and is used in the PARET-ANL model. Equation 13.1 shows the functional relation developed for the fuel temperature coefficient of reactivity, α_{FT} [$/K], where T is in Kelvin. This equation was evaluated from 300K to 1100K. Equations 13.2a and 13.2b show the functions used for the volumetric heat capacities of the fuel and of the clad, C_{fuel} and C_{clad} [J-m^{-3}-K^{-1}], calculated from data in Ref. 13.12. These equations are directly inputted into PARET.

$$\alpha_{FT} = -0.0058 + (1.0\times10^{-5})T - (1.0\times10^{-8})T^2 + (5\times10^{-12})T^3 \qquad \textbf{Equation 13.1}$$

$$C_{fuel} = 1.997\times10^{6} + (1.224\times10^{3})T \qquad \textbf{Equation 13.2a}$$

$$C_{clad} = 2.069\times10^{6} + (1.242\times10^{3})T \qquad \textbf{Equation 13.2b}$$

Progressively greater reactivity insertions were performed with the PARET-ANL model, and the maximum fuel temperature was analyzed to see if it remained below the Safety Limit. A 1,480 pcm insertion, inserted in 0.5 seconds, caused the initial fuel temperature of 60.0 ˚C to rise to a maximum of 191.3 ˚C, and a peak power of 116 MW, resulting in a 10.9 MWs first-excursion energy release. The peak power occurred 15 ms after the half-second reactivity insertion had completed, and the fuel reached its peak temperature 38 ms afterwards. Figure 13-1 shows the graph of total reactor power versus time in the first four seconds of the transient, and Figure 13-2 shows the history of the fuel temperature for the first two seconds of the transient. At times beyond these, the respective variables reached a stable equilibrium. The spikes seen in the harmonic oscillations of the power level (e.g. at 0.8 and 2.8 seconds) arise from the treatment of multi-phase heat transfer within the PARET code.

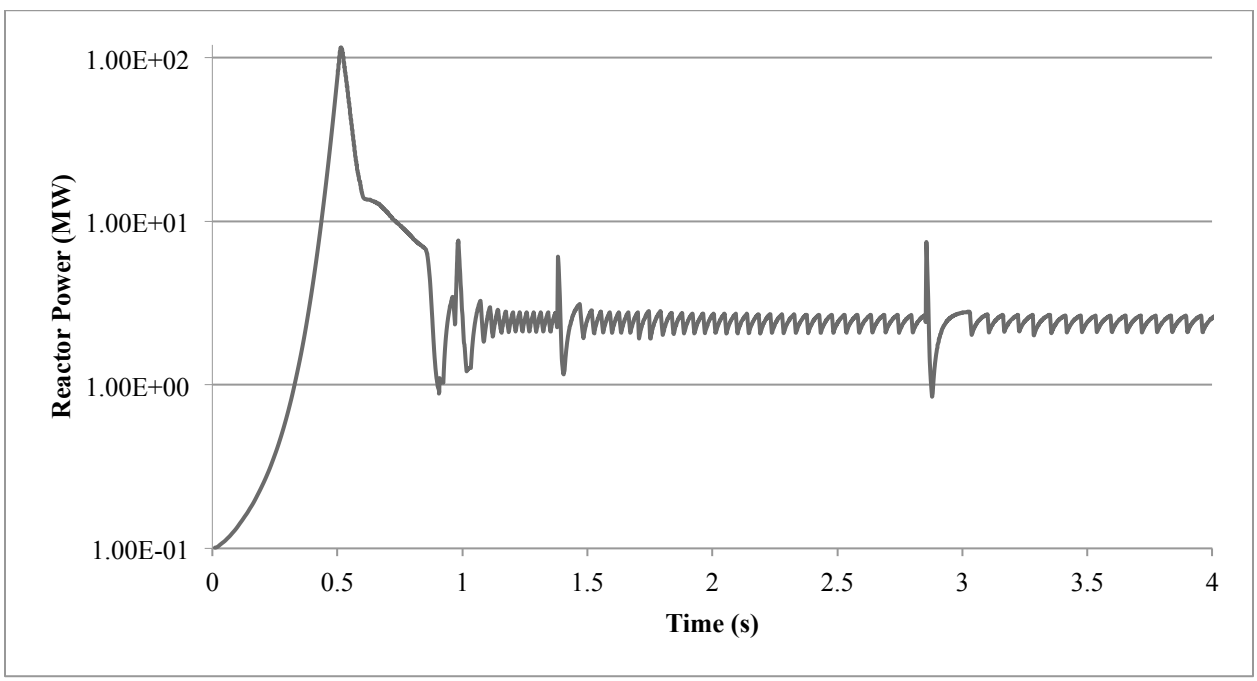

Figure 13-1 PARET - Reactor Power vs. Time for 1,480 pcm of Reactivity Inserted in 0.5 s.

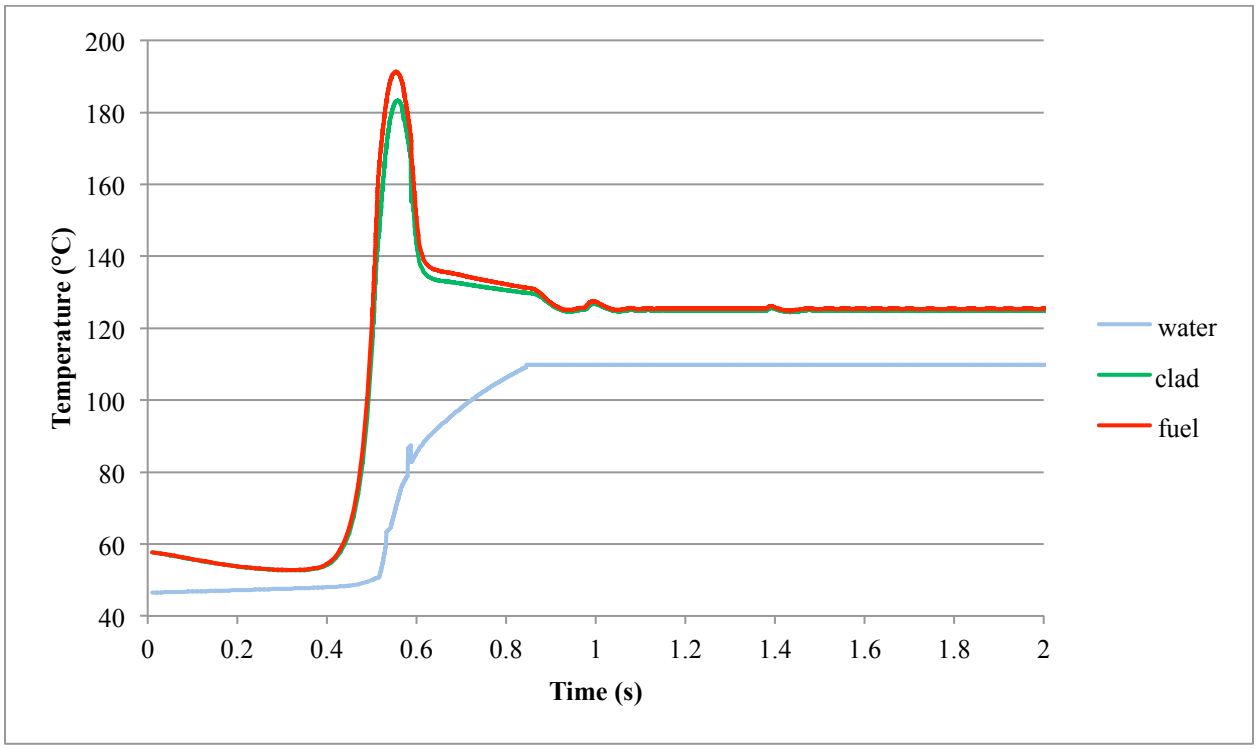

Figure 13-2 PARET - Temperature vs. Time for 1,480 pcm of Reactivity Inserted in 0.5 s.

Accounting for the 70% error discussed earlier, a maximum fuel temperature of 325.2 ˚C is still well below the Safety Limit of 530 ˚C. The PARET-ANL calculation shows that a positive reactivity insertion of 1,480 pcm is incapable of causing damage to the fuel, even during the scenario in which no trips or other protective systems are actuated. Therefore, an accident involving a large, positive insertion of reactivity of up to 1,480 pcm into the UFTR will not endanger the safety and health of the public or the integrity of the UFTR facility.

13.2.3 Loss-of-Coolant Accident (LOCA) and Loss of Flow

13.2.3.1 Initiating Events and Scenarios

Since a loss-of-flow would be simultaneous with the loss-of-coolant, the loss-of-flow accident is considered to be bounded within the LOCA analysis.

In the event of the dump valve opening or rupture disk breaking, all water in the core is drained. The loss of moderator alone introduces a substantial amount of negative reactivity into the UFTR driving the reactor subcritical. The reactivity worth of the water itself is several times greater than the combined reactivity worth of the control blades (Ref. 13.1).

13.2.3.2 Analysis and Determination of Consequences

An analysis by Wagner (Ref. 13.4) investigates a hypothetical HEU core in an equilibrium state at 625 kWth before experiencing a LOCA, focusing specifically on the hottest bundle in the core, with an average power per plate of 4 kW. These operating conditions are far in excess of any feasible operating condition of the current low-enriched uranium (LEU) core. Wagner's analysis shows that the decay heat after reactor shutdown only affects a 26 ºF (14 ºC) temperature rise in the fuel of the hottest bundle in the core. This remains far below the Safety Limit, illustrating that a loss-of-coolant accident bears no risk to the integrity of the fuel or of the core.

The decay heat level following a reactor shut down is given by the empirical equation of Shure and Dudziak (Ref. 13.5). The actual change in temperature caused by a reactor shutdown agrees well with the results using the Shure and Dudziak decay heat equation. Therefore Wagner's analysis appears acceptable, and a reactor shutdown is not a credible accident.

An experimental full trip was investigated at the UCLA Argonaut reactor (Ref. 13.6). It was found that the surface temperature rise of the midpoint of the hottest fuel plate following a full trip at 500 kWth was only 14 °F. Since the maximum temperature was achieved within one minute after the full trip, and since prior steady reactor operation at this power level occurred for only 8 minutes, it is reasonably assumed that decay heating for this case is negligible.

13.2.4 Experimental Malfunctions

13.2.4.1 Initiating Events and Scenarios

Improperly controlled experiments can potentially result in damage to the reactor and unnecessary releases of radioactivity.

13.2.4.2 Analysis and Determination of Consequences

The UFTR Standard Operating Procedures and Technical Specifications are the two main sets of procedural and regulatory requirements related to experiment review and approval. These requirements are focused on ensuring that experiments will not fail in a manner that could result in reactor damage or release of radioactivity which could result in doses exceeding the limits of 10 CFR 20.

Reviews of proposed experiments require the performance of specific analyses to assess items such as the generation of radionuclides and fission products, evaluation of the reactivity worth, chemical and physical properties of the materials being irradiated, corrosive and explosive characteristics of the materials, and encapsulation requirements.

A limit of 720 pcm has been placed on the reactivity worth of any single moveable experiment in the Technical Specifications. This is well below the maximum reactivity insertion analyzed in this chapter. The Technical Specifications further limit the combined reactivity worth of all experiments to less than or equal to 1400 pcm.

To limit the generation of certain fission products, the Technical Specifications limit the quantity and type of fissile material to ensure the credible failure of any fueled experiment remains bounded by the postulated Fuel Handling Accident (FHA) analysis described earlier in this chapter.

To limit the potential for damage due to irradiation of experiments containing corrosive materials, the Technical Specifications require double encapsulation of experiments containing corrosive materials.

To limit the potential for damage due to irradiation of experiments containing explosive materials, the Technical Specifications prohibit irradiation of explosive materials.

13.2.5 Loss of Normal Electrical Power

The reactor is designed to shut itself down safely in case of loss of primary coolant or in case of loss of electric power. There is no credible accident that would lead to the release of radioactivity for the case of loss of power.

The UFTR has a backup diesel electric generator that will auto-start to provide certain UFTR loads however no credit is taken for safety analyses considerations.

13.2.6 External Events

No specific external event is deemed credible or not encompassed by previous analyses in this report.

13.2.7 Mishandling or Malfunctioning Equipment

No additional mishandling or malfunctioning equipment scenarios are deemed credible accident scenarios or not encompassed or bounded by previous analyses in this report.

References

13.1. Pacific Northwest Labs, *Analysis of Credible Accidents for Argonaut Reactors*, NUREG/CR-2079, 1981.

13.2. R.W. Miller, A. Sola, and R.K. McCardell, *Report of the SPERT I Destructive Test program on an Aluminum, Plate-Type, Water Moderated Reactor*, IDO-16285, Arco, Idaho: Phillips Petroleum Co. NRTS, 1964.

13.3. M. R. Zeissler, *Non-Destructive and Destructive Transient Tests of the SPERT I-D, Fully Enriched, Aluminum-Plate-Type Core: Data Summary Report*, IDO-16886, Arco, Idaho: Phillips Petroleum Co., 1973, p. 54.

13.4. W.A. Wagner, *Feasibility Study of 500 kWth Operation of the University of Florida Training Reactor*, Gainesville, FL: Department of Nuclear and Radiological Engineering NRE, 1973.

13.5. K. Shure and D.J. Dudziak, "Calculating Energy Released by Fission Products", *Trans. Am. Nucl. Soc.*, vol. 4 (1), p. 30, 1961.

13.6. G.E. Howard, *Shielding and Thermal Redesign of the UCLA 100kWth Engineering Nuclear Reactor for 500 kWth Operation*. Los Angeles, CA: University of California at Los Angeles, 1968, p. 382.

13.7. M. H. Keshavarz, and H. R. Pouretedal, "An empirical method for predicting detonation pressure of CHNOFCl explosives", *Thermochimica Acta*, vol. 414-2 (27), pp. 203-208, May 2004.

13.8. *SCALE: A Modular Code System for Performing Standardized Computer Analyses for Licensing Evaluations*, ORNL/TM-2005/39, Version 6.11.

13.9. USNRC, *Guidelines for Preparing and Reviewing Applications for the Licensing of Non-Power Reactors, Standard Review Plan and Acceptance Criteria*, Part 1, Section 13.2, NUREG-1537, February 1996.

13.10. ORNL, *Limiting Values of Radionuclide Intake and Air Concentration and Dose Conversion Factors for Inhalation, Submersion, and Ingestion*, Federal Guidance Report 11, 1988.

13.11. ORNL, *External Exposure to Radio nuclides in Air, Water, and Soil*, Federal Guidance Report 12, 1993.

13.12. J.E. Matos and J.L Snelgrove, "Selected Thermal Properties and Uranium Density Relations for Alloy, Aluminide, Oxide, and Silicide Fuels", in *Research reactor core conversion guidebook*, Appendices I-K, vol. 4, IAEA-TECDOC-643, April 1992.

13.13. USNRC, *Assumptions Used for Evaluating the Potential Radiological Consequences of a Loss of Coolant accident for Pressurized Water Reactors*, Rev. 2, Regulatory Guide 1.4, June 1974.

13.14. COMPLY Computer Code Version 1.6

13.15. C.F. Obenchain, "PARET – A Program for the Analysis of Reactor Transients", IDO-17282, Atomic Energy Commission Research and Development Report, *Reactor Technology*. January 1969.

13.16. S. Chatzidakis, A. Ikonomopoulos, and S.E. Day, "PARET-ANL Modeling of a SPERT-IV Experiment Under Different Departure from Nucleate Boiling Correlations", *Nuclear Technology*, vol. 177, January 2012, pp. 119-131.

13.17. MicroShield Computer Code Version 9.07

CHAPTER 15

FINANCIAL QUALIFICATIONS

Chapter 15 – Valid Pages

i	Rev. 0	11/30/2016
ii	Rev. 0	11/30/2016
15-1	Rev. 0	11/30/2016

TABLE OF CONTENTS

15 FINANCIAL QUALIFICATIONS

15.1 Financial Ability to Operate the UFTR

Total annual operating cost estimates for the UFTR are shown below. These costs estimates are for the respective fiscal years which run from July 1 to June 30 (i.e. FY17 runs from July 1, 2016 to June 30, 2017). The salary numbers include benefits (fringe).

Year	Salary	Other Personnel Services	Operating Expenses	Total
FY 17	$345,782	$45,716	$122,525	$514,023
FY 18	$356,156	$45,716	$122,525	$524,397
FY 19	$366,841	$45,716	$122,525	$535,082
FY 20	$377,847	$45,716	$122,525	$546,088
FY 21	$389,182	$45,716	$122,525	$557,423

Funding for the UFTR is appropriated by the State of Florida. This funding includes money for salaries and expenses but no large pieces of equipment. Items in this category are handled with occasional direct allocations either from the College of Engineering, the University, or from external Grants and Awards. In addition, these cost estimates do not include infrastructure services provided by the university such as building heating, air conditioning, electricity, and water.

The UFTR occasionally performs some commercial services, however, the commercial work comprises less than 1% of the ownership and operating costs associated with the facility. Therefore, the UFTR should continue to be licensed as a Class 104(c) facility.

15.2 Financial Ability to Decommission the UFTR Facility

The estimated cost of decommissioning the UFTR is $4.03 million as of August 21, 2016.

The decommissioning cost estimate for UFTR is based on actual vendor price quotes (Coughlin, 2009), prior experience with reactor disassembly, NRC Decommissioning Guidance (NUREG-1757, 2006), and decommissioning experience of other research reactors (Marske & Hertel, 2001). The cost estimate takes no credit for salvage value of any reactor components. The decommissioning cost estimates are updated annually. The updates include adjustments based on the Consumer Price Index (CPI) and Low-Level Waste Disposal factors (NUREG-1307).

The University of Florida is a state institution and thus, according to the provisions of 10 CFR 50.75(e)(1)(iv), the funds needed for decommissioning will be obtained when necessary. The UFTR will likely choose the DECON decommissioning method.

CHAPTER 16

OTHER LICENSE CONSIDERATIONS

Chapter 16 – Valid Pages

i	Rev. 0	11/30/2016
ii	Rev. 0	11/30/2016
16-1	Rev. 0	11/30/2016

TABLE OF CONTENTS

16 Other License Considerations

16.1 Prior Use of Reactor Components

Based on the analysis in FSAR Chapter 13, there are no systems, structures, or components associated with the UFTR that warrant a safety-related classification. Therefore, the only item warranting consideration for prior use is the reactor fuel which was replaced in 2006.

Technical Specifications limit fuel and cladding temperatures to prevent fission product release. Integrity of the fuel cladding is directly verified by Technical Specification required surveillances which include monitoring of primary coolant resistivity and periodic visual fuel inspections.

Further discussion of fuel performance and acceptability for long-term use can be found in FSAR Chapter 4.

Appendix A to Facility License No. R-56

Technical Specifications and Bases

University of Florida Training Reactor

Docket No. 50-083

November 30, 2016

TECHNICAL SPECIFICATIONS

1.0 Introduction

1.1 Scope

This document constitutes the Technical Specifications for Facility License No. R-56 as required by 10 CFR 50.36 and supersedes all prior UFTR Technical Specifications. This document includes the "bases" to support the selection and significance of the specifications. Each basis is included for information purposes only. They are not part of the Technical Specifications, and they do not constitute limitations or requirements to which the licensee must adhere.

1.2 Definitions

CHANNEL: A channel is the combination of sensor, line, amplifier, and output devices that are connected for the purpose of measuring the value of a parameter.

CHANNEL CALIBRATION: Channel calibration shall be the adjustment, as necessary, of the channel output such that it responds within the necessary range and accuracy to known values of the parameter that the channel measures. The channel calibration shall encompass all devices in the channel required for channel OPERABILITY and the CHANNEL TEST.

CHANNEL CHECK: Channel check shall be the qualitative verification of acceptable performance by observation of channel behavior, or by comparison of the channel indication and status with other independent channels measuring the same parameter.

CHANNEL TEST: A channel test shall be:

a. Analog and bistable channels - the introduction of a signal into the channel for verification that it is OPERABLE.
b. Digital computer channels – the use of diagnostic programs to test digital computer hardware and the introduction of simulated process data into the channel for verification that it is OPERABLE.

CORE ALTERATION: Core alteration shall be the movement of any reactor fuel assemblies, graphite moderator elements, experimental facilities, or control blade assemblies within the reactor core region in MODE 5.

CORE CONFIGURATION: Core configuration shall include the number, type, or arrangement of fuel assemblies, graphite moderator elements, experimental locations, and control blades occupying the core region.

DAMAGED FUEL: A fuel element shall be identified as damaged if the cladding is breached resulting in fission product release or if visual inspection of the fuel indicates cladding blistering, excessive swelling, excessive bulging, excessive deformation, cladding holes, cladding tears, or cladding breaches of any kind.

EXCESS REACTIVITY: Excess reactivity shall be that amount of reactivity that would exist if all control blades were moved to the maximum reactive condition from the point where the reactor is exactly critical (keff = 1). When calculating excess reactivity, no credit shall be taken for negative experiment worth, temperature effects or xenon poisoning.

EXPERIMENT: Any evolution, hardware, or target (excluding devices such as detectors or foils) that is designed to investigate non-routine reactor characteristics or that is intended for irradiation within an irradiation facility. Hardware rigidly secured to the core or shield structure so as to be a part of its design to carry out experiments is not normally considered an experiment.

FUEL DEFECT: A fuel defect shall be any unintended change in the physical as-built condition of the fuel with the exception of normal effects of irradiation (e.g. elongation due to irradiation growth or assembly bow). Examples include unusual pitting, unusual bulging, missing or broken bolts, missing or broken spacers, missing or broken combs, missing or broken welds, or unusual corrosion.

MOVABLE EXPERIMENT: A movable experiment is one where it is intended that all or part of the experiment may be moved into or adjoining the core or into and out of the core while the reactor is in MODES 1 or 2.

OPERABLE - OPERABILITY: A system or component shall be operable or have operability when it is capable of performing its intended function.

RATED THERMAL POWER (RTP): RTP shall be a total reactor core heat transfer rate to the reactor coolant of 100 kWt.

REACTIVITY WORTH OF AN EXPERIMENT: The reactivity worth of an experiment is the value of the reactivity change that results from the experiment being inserted into or removed from its intended position.

REACTOR CELL: The Reactor Cell is the confinement enclosure around the reactor structure that is designed to limit the release of effluents between the enclosure and its external environment through defined pathways.

REACTOR OPERATING: The reactor is operating whenever it is not in MODES 3, 4, 5 or defueled. Reactor operation at greater than or equal to 1% RTP shall be called MODE 1. Reactor operation at less than 1% RTP shall be called MODE 2.

REACTOR SHUTDOWN: The reactor is shutdown if it is subcritical by at least 760 pcm with the core at ambient temperature with the reactivity worth of xenon equal to zero and with the reactivity worth of all installed experiments included. The reactor shutdown condition shall be called MODE 3.

REACTOR SECURED: The reactor is secured when with fuel present in the reactor there is insufficient water moderator available in the reactor to attain a keff greater than 0.8 or there is insufficient fuel present in the reactor under optimum available conditions of moderation and reflection to attain a keff greater than 0.8 or the reactor is shutdown with all control blades fully inserted; and the following conditions exist:

a. the console key switch is in the OFF position and the key is removed from the switch; and
b. no work is in progress involving fuel, core structure, installed control blades, or control blade drives unless they are physically decoupled from the control blades; and
c. no experiments are being moved or serviced that have, on movement, a reactivity worth exceeding 720 pcm.

The reactor secured condition shall be called MODE 4.

REACTOR OUTAGE: The reactor is in an outage condition anytime less than two layers of concrete block shielding are fully installed over the top of the core area with fuel in the core. The reactor outage condition shall be called MODE 5.

SHALL, SHOULD, and MAY: The word "shall" is used to denote a requirement; the word "should" is used to denote a recommendation; and the word "may" is used to denote permission, neither a requirement nor a recommendation.

SHUTDOWN MARGIN: Shutdown margin is the minimum shutdown reactivity necessary to ensure the reactor can be made subcritical by means of the reactor control and trip systems starting from any permissible operating condition with the most reactive blade in its most reactive position and that the reactor will remain subcritical without further operator action. When calculating shutdown margin, no credit shall be taken for negative experiment worth, temperature effects or xenon poisoning.

STRUCTURE, SYSTEM, OR COMPONENT (SSC): A structure is an element, or a collection of elements, to provide support or enclosure, such as a building, free-standing tanks, basins, dikes, or stacks. A system is a collection of components assembled to perform a function, such as piping, cable trays, conduits, or ventilation. A component is an item of mechanical or electrical equipment, such as a pump, valve, or relay, or an element of a larger array, such as a length of pipe, elbow, or reducer.

UNSCHEDULED SHUTDOWN: An unscheduled shutdown is any unplanned shutdown of the reactor caused by actuation of the reactor trip system, operator error, equipment malfunction, or a manual shutdown in response to conditions that could adversely affect safe operation, not including shutdowns that occur during testing or checkout operations.

1.3 Surveillance Intervals

Allowable intervals shall not exceed:

a. 10 years – interval not to exceed 12 years

b. 5 years – interval not to exceed 6 years

c. Biennial – interval not to exceed 30 months

d. Annual – interval not to exceed 15 months

e. Semiannual – interval not to exceed 7.5 months

f. Quarterly – interval not to exceed 4 months

g. Monthly – interval not to exceed 6 weeks

h. Weekly – interval not to exceed 10 days

i. Daily – interval not to exceed 24 hours

2.0 Safety Limit and Limiting Safety System Settings

2.1 Safety Limit

Applicability: MODES 1 and 2.

Objective: To ensure fuel cladding integrity.

Specification: The fuel and cladding temperatures shall not exceed 986°F (530°C).

Basis: The safety limit is based on measurement of first fission product release from the fuel at or above the blister threshold temperature described in NUREG-1313.

2.2 Limiting Safety System Settings

Applicability: MODES 1 and 2.

Objective: To ensure automatic action terminates the abnormal situation before the safety limit is challenged.

Specification: According to Table 2.2-1.

Basis: Due to the inherently safe core design and low EXCESS REACTIVITY, postulated reactivity insertion event analyses indicate no automatic control or safety functions are needed to prevent reaching the Safety Limit (Ref. SAR Section 13.2). Therefore, to allow for generation of a reasonable set of Technical Specifications, and provide defense-in-depth, the fundamental reactor parameters of power, temperature, and flow were conservatively chosen for incorporation as LSSSs. These very conservative settings ensure normal reactor operation remains within the assumptions of the thermal hydraulic analysis for normal operation (ONBR > 1) as described in SAR Section 4.6.

Table 2.2-1
Limiting Safety System Settings

	FUNCTION	ALLOWABLE VALUE
1.	High Reactor Power Trip	≤ 110% RTP
2.	Low Reactor Coolant Flow Trip	≥ 41 gpm
3.	High Average Reactor Coolant Inlet Temperature Trip	≤ 102°F

3.0 Limiting Conditions for Operation and Surveillance Requirements

3.0.1 LCO Applicability

Applicability: Any MODE or specified condition in which the applicable SSC is required to be OPERABLE.

Objective: To ensure timely operator action in the event a SSC is discovered to be inoperable during a MODE or other specified condition in which the SSC is required to be OPERABLE.

Specification:

1. When any of the following LCOs are not met the reactor shall be placed in a MODE or other condition in which the LCO is not applicable. Action shall be initiated within 15 minutes of discovery of failure to meet the LCO. Where corrective measures are completed that permit operation in accordance with the LCO, completion of the actions required by LCO 3.0.1 are not required:
    a. LCO 3.2.1
    b. LCO 3.2.2
    c. LCO 3.2.3
    d. LCO 3.3.1
    e. LCO 3.3.2
    f. LCO 3.4
    g. LCO 3.5
    h. LCO 3.7.1
    i. LCO 3.9.1

2. Suspension of CORE ALTERATIONS, irradiated fuel movement, or irradiated fueled EXPERIMENT movement, shall not preclude completion of movement of an irradiated component to a safe position.

Basis: LCO 3.0.1(1) provides the operator with guidance and an allowed action time upon discovery that the specified LCO is not being met. The 15-minute time limit ensures sufficient time is available to initiate appropriate action while limiting the duration of the LCO outage. LCO 3.0.1(2) provides the operator with prioritization guidance and an exception to the 15-minute allowed action time to allow for safe completion of an irradiated component movement already in-progress.

3.0.2 Surveillance Requirement Applicability

Applicability: Any MODE or specified condition in which the applicable SSC or variable is required to be OPERABLE or within specified limits.

Objective: To confirm SSCs and variable properties required by Technical Specifications are OPERABLE and within specified limits.

Specification:

1. Failure to meet a surveillance, whether such failure is experienced during the performance of the surveillance or between performances of the surveillance, shall be failure to meet the associated LCO. Failure to perform a surveillance within the specified frequency shall be failure to meet the LCO except as provided in TS 3.0.2 (2) and TS 3.0.2 (3).

2. SRs may be deferred during MODES or other specified conditions in which a SSC or variable is not required to be OPERABLE or within specified limits; however, they shall be completed prior to entry into a MODE or other specified condition in which the SSC or variable is required to be OPERABLE or within specified limits unless entry into the MODE or other specified condition is required for performance of the surveillance as provided in TS 3.0.2 (3).

3. The following SRs require entry into the applicable MODE or other specified condition for performance of the surveillance. These SRs shall be performed as soon as practicable after entry into the MODE or other specified condition required for performance of the surveillance:
    a. SR 3.1.1
    b. SR 3.1.2
    c. SR 3.2.3.3 for LCO 3.2.3(1)
    d. SR 3.7.2.2
    e. SR 3.7.2.3

4. Appropriate surveillance testing on any Technical Specification required SSC shall be conducted after replacement, repair, or modification before the SSC is considered OPERABLE except as provided in TS 3.0.2 (3).

Basis: These LCOs provide the operator with guidance and restrictions regarding missed SRs, deferred SRs, and post-maintenance testing of Technical Specification required SSCs.

3.1 Reactor Core Reactivity Parameters

Applicability: MODES 1 through 5.

Objective: To ensure the reactor can be made subcritical and to ensure the safety limit shall not be exceeded.

Specification: According to Table 3.1-1.

Basis: The value of SHUTDOWN MARGIN assures the reactor can be made subcritical from any operating condition. The value of EXCESS REACTIVITY allows flexibility to operate the reactor without the need to add fuel on a frequent basis while maintaining the installed core EXCESS REACTIVITY within the bounds of the analysis described in SAR Section 13.2.

Table 3.1-1
Reactor Core Reactivity Parameters

	REACTIVITY PARAMETER	ALLOWABLE VALUE
1.	SHUTDOWN MARGIN	≥ 760 pcm
2.	EXCESS REACTIVITY	≤ 1480 pcm

SURVEILLANCE REQUIREMENTS

	SURVEILLANCE	FREQUENCY
SR 3.1.1	Verify SHUTDOWN MARGIN within limits	Annual [(a)]
SR 3.1.2	Verify EXCESS REACTIVITY within limits	Annual [(a)]

(a) These reactivity parameters shall also be verified within limits following changes in CORE CONFIGURATION.

3.2 Reactor Control and Trip Systems

3.2.1 Control Blades

Applicability: MODES 1 and 2.

Objective: To ensure the reactor can be shut down promptly when a trip signal is initiated.

Specification: Individual control blade drop times as measured from the fully withdrawn position for each of the four control blades shall not exceed 2.0 seconds from initiation of blade drop to full insertion.

Basis: This specification ensures that the reactor will be promptly shut down when a trip signal is initiated. The reactivity insertion analyses provided in SAR Section 13.2 demonstrate the acceptability of the control blade drop time.

SURVEILLANCE REQUIREMENT

	SURVEILLANCE	FREQUENCY
SR 3.2.1	Verify each control blade drop time is within limits	Annual

3.2.2 Reactor Trips

Applicability: MODES 1 and 2.

Objective: To specify the minimum required OPERABLE reactor trips.

Specification: According to Table 3.2.2-1.

Basis: LCOs 3.2.2(1), 3.2.2(2), and 3.3.3(3) ensure reactor operation remains bounded by the thermal hydraulic analysis described in SAR Section 4.6. LCO 3.2.2(4) ensures early termination of a reactivity insertion event originating from low power levels. LCO 3.2.2(5) provides redundancy to LCO 3.2.2(2) and acts as a blade withdrawal inhibit until the minimum core water level is reached. The Manual trip allows the operator to quickly shutdown the reactor if an unsafe or abnormal situation occurs.

Table 3.2.2-1
Specifications for Reactor System Trips

	FUNCTION	SURVEILLANCE REQUIREMENTS	ALLOWABLE CONDITION OR VALUE
1.	High Reactor Power	SR 3.2.2.1	≤ 110% RTP
2.	Low Reactor Coolant Flow	SR 3.2.2.2	≥ 41 gpm
3.	High Reactor Coolant Inlet Temperature	SR 3.2.2.1	≤ 102°F
4.	Fast Reactor Period	SR 3.2.2.1	≥ 3 seconds
5.	Low Reactor Coolant Level	SR 3.2.2.2	≥ 2 inches above the fuel
6.	Manual	SR 3.2.2.1	OPERABLE

SURVEILLANCE REQUIREMENTS

	SURVEILLANCE	FREQUENCY
SR 3.2.2.1	Perform a CHANNEL CHECK	Daily
SR 3.2.2.2	Perform a CHANNEL TEST	Quarterly

3.2.3 Reactor Measuring Channels

Applicability: MODES 1 and 2.

Objective: To specify the minimum measuring channels required to be OPERABLE.

Specification: According to Table 3.2.3-1.

Basis: To ensure indications of the specified parameters are provided to the operator for adequate monitoring of steady state and transient reactor conditions.

Table 3.2.3-1
Minimum Required Measuring Channels

	CHANNEL	SURVEILLANCE REQUIREMENTS	NUMBER OPERABLE
1.	Reactor Power	SR 3.2.3.2 and SR 3.2.3.3	2
2.	Reactor Period	SR 3.2.3.2 and SR 3.2.3.3	1
3.	Control Blade Position	SR 3.2.3.1	4
4.	Reactor Coolant Flow	SR 3.2.3.1 and SR 3.2.3.3	1
5.	Average Reactor Coolant Inlet Temperature	SR 3.2.3.3	1
6.	Average Reactor Coolant Outlet Temperature	SR 3.2.3.3	1

SURVEILLANCE REQUIREMENTS

	SURVEILLANCE	FREQUENCY
SR 3.2.3.1	Perform a CHANNEL CHECK	Weekly
SR 3.2.3.2	Perform a CHANNEL TEST	Daily
SR 3.2.3.3	Perform a CHANNEL CALIBRATION	Annual

3.3 Coolant Systems

3.3.1 Leak Detection

Applicability: MODES 1 and 2.

Objective: To ensure remote indication of water leakage into the equipment pit.

Specification: The equipment pit water level sensor shall provide an alarm if water level in the equipment pit is greater than 1 inch above equipment pit floor level.

Basis: This specification is designed to alert the operator of water leakage into the equipment pit. The setpoint of one inch is based on the design of the equipment pit alarm level sensor.

SURVEILLANCE REQUIREMENT

	SURVEILLANCE	FREQUENCY
SR 3.3.1	Perform a CHANNEL TEST	Weekly

3.3.2 Reactor Coolant System Water

Applicability: When Reactor Coolant System water is in contact with fuel assemblies.

Objective: To specify the electrical resistivity limit for reactor coolant system water in contact with in-core fuel assemblies.

Specification: The electrical resistivity of reactor coolant system water shall be no less than 0.5 MΩ-cm [(a)].

Basis: The resistivity limit is designed to minimize fuel assembly corrosion. Monitoring reactor coolant resistivity provides for early indication of any potential fission product release.

SURVEILLANCE REQUIREMENT

	SURVEILLANCE	FREQUENCY
SR 3.3.2	Verify resistivity is within the limit	Daily

(a) Normal transients and experiments can cause Reactor Coolant System water electrical resistivity to drop below 0.5 MΩ-cm for short periods of time. For these expected occurrences, reactor operations with electrical resistivity less than 0.5 MΩ-cm may continue for periods not to exceed 4 hours provided that continuous control room indication of reactor coolant resistivity is utilized and trended during that period.

3.4 Reactor Cell Evacuation Alarm Interlock

Applicability: MODES 1 and 2; during CORE ALTERATIONS, irradiated fuel movement, irradiated fueled EXPERIMENT movement, and during movement of concrete block shielding over the top of the core in MODE 5.

Objective: Specify requirements for this evacuation alarm system interlock.

Specification: Two area radiation monitors simultaneously alarming high shall cause an automatic actuation of the evacuation alarm.

Basis: As described in SAR Chapter 7, the evacuation alarm interlock with the area monitor high alarm function is designed to alert the staff and occupants of potential radiological emergencies including potential fission product release into the REACTOR CELL.

SURVEILLANCE REQUIREMENT

	SURVEILLANCE	FREQUENCY
SR 3.4	Verify proper interlock function	Weekly

3.5 Reactor Cell Ventilation Systems

Applicability: MODES 1 and 2;,during CORE ALTERATIONS, irradiated fuel movement, irradiated fueled EXPERIMENT movement, and during movement of concrete block shielding over the top of the core in MODE 5.

Objective: To specify the minimum OPERABILITY requirement for the REACTOR CELL ventilation systems.

Specification:

1. The core vent and stack dilution systems shall be operating.

2. REACTOR CELL pressure shall be negative with respect to the surrounding environment.

Basis: As described in SAR Chapters 9 and 11, operation of the core vent system ensures REACTOR CELL pressure is maintained negative relative to the surrounding environment and potential gaseous effluents are routed to the reactor stack. Operation of the stack dilution system ensures that gaseous effluents originating from the REACTOR CELL are diluted prior to release.

SURVEILLANCE REQUIREMENTS

	SURVEILLANCE	FREQUENCY
SR 3.5.1	Verify core vent and stack dilution systems are operating	Daily
SR 3.5.2	Verify REACTOR CELL pressure is negative with respect to the surrounding environment	Quarterly

3.6 Emergency Power – This section intentionally blank

3.7 Radiation Monitoring Systems and Radioactive Effluents

3.7.1 Radiation Monitoring Systems

Applicability: MODES 1 and 2; During CORE ALTERATIONS, irradiated fuel movement, irradiated fueled EXPERIMENT movement, and during movement of concrete block shielding over the top of the core in MODE 5.

Objective: To specify minimum OPERABILITY requirements for the area radiation monitors, air particulate detector, and stack radiation monitor.

Specification: According to Table 3.7.1-1.

Basis: As described in SAR Chapter 7, the radiation monitoring channels inform the operator about the radiological conditions present in the REACTOR CELL and reactor stack and provide early detection of any potential fission product release or radiological abnormality.

Table 3.7.1-1
Minimum Radiation System Requirements

	MONITOR TYPE	SURVEILLANCE REQUIREMENTS	NUMBER REQUIRED OPERABLE [(a)]
1.	Area Radiation Monitor	SR 3.7.1.1, SR 3.7.1.2, and SR 3.7.1.3	3
2.	Air Particulate Detector	SR 3.7.1.1, SR 3.7.1.2, and SR 3.7.1.3	1
3.	Stack Radiation Monitor	SR 3.7.1.1, SR 3.7.1.2, and SR 3.7.1.3	1

(a) When any single required radiation monitoring channel becomes inoperable, portable instruments, surveys, or analysis may be substituted within one hour of discovery for periods not to exceed one week. Maintenance and surveillance interruptions for periods of one hour or less are permissible.

SURVEILLANCE REQUIREMENTS

	SURVEILLANCE	FREQUENCY
SR 3.7.1.1	Perform a CHANNEL CHECK	Daily
SR 3.7.1.2	Perform a CHANNEL TEST	Weekly
SR 3.7.1.3	Perform a CHANNEL CALIBRATION	Semiannual

3.7.2 Argon-41 Discharge

Applicability: MODES 1 and 2.

Objective: To ensure Argon-41 emissions resulting from licensed UFTR operation remain below applicable limits.

Specification:

1. Ar-41 emissions resulting from licensed UFTR operation shall not exceed the total effective dose limit of 10 CFR 20.1101(d).

2. Energy generation (kW- hours) of the UFTR shall be limited to ensure TS 3.7.2(1) is not exceeded.

Basis: Regulation 10 CFR 20.1101(d) imposes an ALARA constraint of 10 mrem per year total effective dose equivalent on airborne emissions of radioactive material to the environment. To ensure compliance with this annual constraint, the UFTR limits Ar-41 produced by administratively limiting energy generation as described in SAR Chapter 11.

SURVEILLANCE REQUIREMENTS

	SURVEILLANCE	FREQUENCY
SR 3.7.2.1	Verify UFTR energy generation is within the limit	Quarterly
SR 3.7.2.2	Verify the expected total effective dose equivalent to the individual member of the public likely to receive the highest dose from Ar-41 emission is within the limit of 10 CFR 20.1101(d)	Semiannual
SR 3.7.2.3	Determine the UFTR energy generation limit based on measurement of the stack effluent discharge	Semiannual

3.8 Limitations on Experiments

3.8.1 Experiment Reactivity Limits

Applicability: MODES 1 and 2.

Objective: To minimize the likelihood of an inadvertent prompt reactivity excursion and to prevent damage to the fuel and cladding.

Specification:

1. The absolute value of the reactivity worth of any single MOVABLE EXPERIMENT shall be less than or equal to 720 pcm.

2. The sum of the absolute values of the reactivity worths of all EXPERIMENTS shall be less than or equal to l400 pcm.

Basis: The reactivity limit on MOVABLE EXPERIMENTS is less than the effective delayed neutron fraction to prevent an inadvertent prompt reactivity excursion. The total reactivity worth limit is established to prevent a reactivity insertion larger than the stipulated maximum step reactivity insertion in the accident analysis (Ref. SAR Sections 4.1 and 13.2).

3.8.2 Experiment Materials and Malfunctions

Applicability: MODES 1 and 2.

Objective: To prevent damage to reactor components resulting from failure of an EXPERIMENT involving explosive or corrosive materials.

Specification:

1. Explosive materials, such as gunpowder, TNT, nitroglycerin, or PETN, shall not be irradiated in the reactor.

2. EXPERIMENTS known to contain corrosive materials shall be double encapsulated.

3. EXPERIMENTS shall be designed such that they will not contribute to the failure of other EXPERIMENTS, core components, or fuel cladding.

Basis: This specification is intended to prevent damage to reactor components resulting from failure of an experiment involving explosive or corrosive materials (Ref. ANSI/ANS-15.1-2007).

3.8.3 Fueled Experiment Malfunctions

Applicability: MODES 1 and 2.

Objective: To ensure fueled EXPERIMENT malfunctions are bounded by accident analyses.

Specification:

1. Each fueled EXPERIMENT shall be limited such that the total inventory of iodine isotopes 131 through 135 in the EXPERIMENT is not greater than 0.01 curies.

2. Fueled EXPERIMENTS shall be designed such that they will not contribute to the failure of other EXPERIMENTS, core components, or fuel cladding.

Basis: This specification ensures that malfunction of a fueled experiment remains bounded by the accident analyses of SAR Section 13.2 and designed such that they do not contribute to the failure of other experiments and reactor components (Ref. ANSI/ANS-15.1-2007).

3.9 Other Facility Specific Limitations

3.9.1 Shield Tank Level

Applicability: MODES 1 and 2.

Objective: To specify the minimum OPERABILITY requirement for the shield tank.

Specification: Shield tank water level shall be no less than 6 inches below the normal established level.

Basis: Maintaining shield tank water level within 6 inches of the normal established level ensures sufficient water to adequately shield the west side of the reactor core during full power reactor operation (Ref. SAR Chapters 4, 7, 9, 10 and 11).

SURVEILLANCE REQUIREMENT

	SURVEILLANCE	FREQUENCY
SR 3.9.1	Verify shield tank water level is within the limit	Daily

3.9.2 Fuel and Fuel Handling

Applicability: According to Table 3.9.2-1.

Objective: To establish fuel integrity and fuel handling operations remain bounded by the accident analyses.

Specification: According to Table 3.9.2-1.

Basis: Operation with damage free fuel ensures consequences of accidents involving a fission product release remain bounded by the analysis provided in SAR Section 13.2. Limiting entry into MODE 5 until at three days after shutdown ensures actual fuel fission product inventory remains bounded by the conservative calculated fission product inventory provided in SAR Section 13.2.

Table 3.9.2-1
Fuel and Fuel Handling Limitations

	LIMITING CONDITION	APPLICABLE MODES	SURVEILLANCE REQUIREMENTS
1.	The reactor shall not be operated with DAMAGED FUEL in the core except to locate the damaged in-core fuel	1, 2	SR 3.9.2.1
2.	At least two layers of concrete block shielding shall remain fully installed over the core area until a minimum of three days have passed since the last operation in MODE 1	5	SR 3.9.2.2

SURVEILLANCE REQUIREMENTS

	SURVEILLANCE	FREQUENCY
SR 3.9.2.1	Reactor coolant water shall be sampled and evaluated for indications of DAMAGED FUEL	Weekly
SR 3.9.2.2	Verify the integrity of in-core reactor fuel assembly cladding by visual inspection of at least 8 in-core reactor fuel assemblies. DAMAGED FUEL assemblies and assemblies with FUEL DEFECTS shall be removed from the core	10 years
SR 3.9.2.3	Verify a minimum of three days have passed since last operation in MODE 1	Prior to MODE 5 entry

4.0 This section intentionally left blank. Surveillances are included in Section 3.0

5.0 Design Features

5.1 Reactor Cell

Applicability: At all times.

Objective: To specify REACTOR CELL features supporting facility radiological assumptions.

Specification:

1. The REACTOR CELL shall be located at the north end of the Reactor Building which is located on the main campus of the University of Florida in the vicinity of the buildings housing the College of Engineering and the College of Journalism.

2. The REACTOR CELL shall be equipped with independent air conditioning and ventilation systems.

3. The REACTOR CELL core ventilation system effluents shall be discharged through a stack at a minimum of 25 feet above ground level.

4. The REACTOR CELL minimum free volume shall be 36,000 cubic feet.

Basis: To ensure changes to specified REACTOR CELL features supporting radiological safety assumptions are not made without prior NRC approval.

5.2 Reactor Coolant System

Applicability: When Reactor Coolant System water is in contact with fuel assemblies loaded into the reactor core.

Objective: To specify Reactor Coolant System design features that support gravity draining of the core water moderator.

Specification: The reactor coolant water flow path shall be from the storage tank located in the equipment pit through the heat exchanger up to the bottom of the fuel boxes, upward past the fuel assemblies to overflow pipes and into a header for gravity driven return to the storage tank.

Basis: Fuel boxes are elevated above other major Reactor Coolant System components to ensure any event causing a loss of primary coolant flow results in the water moderator gravity draining from the fuel boxes thereby shutting down the reactor (Ref. SAR Section 5.2).

5.3 Reactor Core and Fuel

5.3.1 Reactor Core Design

Applicability: MODES 1 through 5.

Objective: To specify Reactor Core design features which if altered could affect safety.

Specification:

1. The reactor core shall contain six aluminum fuel boxes, containing up to four fuel assemblies each, arranged in two parallel rows of three boxes each, and separated by about 30 cm of graphite.

2. The reactor core shall contain four control blades of swing-arm type consisting of aluminum vanes tipped with cadmium, protected by magnesium shrouds.

3. The reactor core shall contain the surrounding graphite assembly that measures about 5' x 5' x 5'.

4. The reactor core shall contain experimental locations to include three vertical columns and one horizontal throughport.

Basis: This ensures specified reactor core design features remain as analyzed in SAR Chapters 4 and 13.

5.3.2 Reactor Core Fuel Loading

Applicability: MODES 1, 2 and 3.

Objective: To ensure the operational reactor core is loaded as intended and contains no fewer full fuel assemblies than the limiting CORE CONFIGURATION.

Specification:

1. The reactor core shall contain no less than 22 full fuel assemblies and shall be loaded so that all fuel assembly positions are occupied.

2. The reactor core shall contain up to 24 fuel assemblies of 14 plates each. Up to 6 of these assemblies may be replaced with pairs of partial assemblies. Each partial assembly shall be composed of either all dummy or all fueled plates. A full assembly shall be replaced with no fewer than 13 plates in a pair of partial assemblies.

Basis: This ensures the reactor core is loaded as intended and that the operational fuel loading remains bounded by the limiting CORE CONFIGURATION described in SAR Chapters 4 and 13.

5.3.3 Reactor Fuel Design

Applicability: MODES 1 through 5.

Objective: To specify the proper reactor fuel type and burnup limit.

Specification:

1. Fuel assemblies installed in the core shall be of the general MTR type, with thin fuel plates clad with aluminum 6061 and containing uranium silicide-aluminum (U3Si2-Al) fuel meat enriched to no more than about 19.75% U-235.

2. Fuel assembly burnup shall not exceed 50% of its initial U-235 content.

Basis: This ensures the reactor core is loaded with the proper type fuel as analyzed in SAR Chapters 4 and 13 and that fuel burnup is limited to within the evaluation limits of NUREG-1313.

5.4 Fuel Storage

Applicability: At all times.

Objective: To ensure fuel in storage remains subcritical.

Specification: Fuel, including fueled EXPERIMENTS and fueled devices, not in the reactor shall be stored in a geometry that ensures keff is no greater than 0.90 for all conditions of moderation and reflection using light water.

Basis: This ensures fuel in storage remains subcritical as described in SAR Section 9.2.

6.0 Administrative Controls

6.1 Organization

6.1.1 Structure

The organization for the management and operation of the reactor facility shall include the structure indicated in Figure 6-1. Job titles are shown for illustration and may vary. Four levels of authority are provided.

Level 1 - Individuals responsible for the reactor facility's licenses, charter, and site administration.

Level 2 - Individual responsible for reactor facility management.

Level 3 - Individual responsible for reactor operations, and supervision of day-to-day facility activities.

Level 4 - Reactor operations staff.

6.1.2 Responsibility

Responsibility for the safe operation of the reactor facility shall be with the chain of command established in Figure 6-1. In addition to having responsibility for the policies and operation of the reactor facility, individuals at various management levels shall be responsible for safeguarding the public and facility personnel from undue radiation exposures, and for adhering to all requirements of the operating license and Technical Specifications. In all instances, responsibilities of one level may be assumed by designated alternates or by higher levels, conditional upon appropriate qualifications.

6.1.3 Staffing

1. The minimum staffing when the reactor is in MODES 1, 2, or 3 shall be:

    a. An operator in the control room;

    b. A designated second person present at the facility complex able to carry out prescribed written instructions; and

    c. A designated senior operator shall be readily available on call. "Readily Available on Call" means an individual who:

        i. has been specifically designated and the designation known to the operator on duty;

        ii. can be rapidly contacted by phone or other means of communication available to the operator on duty; and

        iii. is capable of getting to the reactor facility within 30 minutes under normal conditions.

2. A list of reactor facility personnel by name and telephone number shall be readily available in the control room for use by the operator. The list shall include:

    a. Management personnel,

    b. Radiation control personnel, and

    c. Other operations personnel.

3. Events requiring the presence at the facility of a senior operator are:

    a. All CORE ALTERATIONS,

    b. Initial startup and approach to power,

    c. Relocation of any EXPERIMENT with reactivity worth greater than 720 pcm,

    d. Recovery from UNSCHEDULED SHUTDOWN, and

    e. During movement of concrete block shielding over top of the core in MODE 5.

6.1.4 Selection and Training of Operations Personnel

The selection and training of licensed operations personnel should be in accordance with the American National Standard, ANSI/ANS-15.4-1988, Selection and Training of Personnel for Research Reactors.

6.2 Review and Audit

6.2.1 RSRS Composition and Qualifications

1. The RSRS shall be composed of a minimum of three members with expertise in reactor technology and/or radiological safety.

2. Members of the RSRS shall be appointed by the Chair of the Radiation Control Committee (RCC).

3. Qualified and approved alternates may serve in the absence of regular members.

6.2.2 RSRS Rules

RSRS functions shall be conducted in accordance with the following charter:

1. At least one meeting shall be held annually. Meetings may be held more frequently as circumstances warrant, consistent with the effective monitoring of facility operations as determined by the RSRS Chair;

2. The RSRS Chair shall ensure meeting minutes are reviewed, approved, and submitted in a timely manner; and

3. A quorum shall consist of at least three members where the operating staff does not constitute a majority.

6.2.3 RSRS Review Function

The following items shall be reviewed:

1. Changes performed under 10 CFR 50.59;

2. New procedures and major revisions of existing procedures having safety significance;

3. Proposed changes to a SSC having safety significance;

4. Proposed changes in Technical Specifications or license;

5. Violations of Technical Specifications or license;

6. Violations of procedures having safety significance;

7. Operating abnormalities having safety significance;

8. Reportable occurrences listed in Section 6.7.2; and

9. Audit reports.

6.2.4 RSRS Audit Function

The following items shall be audited:

1. Facility operations for conformance to the Technical Specifications and applicable license conditions, annually;

2. The retraining and requalification program for the operating staff, biennially;

3. The results of action taken to correct deficiencies in reactor SSCs or methods of operations that affect reactor safety, annually; and

4. The emergency plan and emergency implementing procedures, biennially.

A report of audit findings shall be submitted to the Dean of the College of Engineering and RSRS members within three months after the audit has been completed.

6.3 Radiation Safety

The Radiation Control Officer shall be responsible for implementation of the radiation protection program and shall report to Level 2 or higher.

6.4 Procedures

The UFTR facility shall be operated in accordance with approved written procedures. Operating procedures shall be in effect for the following items:

1. Normal startup, operation and shutdown of the reactor;

2. Fuel loading, unloading, and movement within the reactor;

3. Maintenance of major components of systems that could have an effect on reactor safety;

4. Surveillances and inspections required by the Technical Specifications or those that may have an effect on reactor safety;

5. Personnel radiation protection, consistent with applicable regulations. The procedures shall include management commitment to maintain exposures as low as reasonably achievable (ALARA);

6. Administrative controls for operations and maintenance and for the conduct of irradiations and EXPERIMENTS that could affect reactor safety or core reactivity;

7. Implementation of the Emergency Plan and security procedures; and

8. Procedures for the use, receipt, and transfer of by-product material, if appropriate.

Changes to the above procedures shall be made only after review by the RSRS and approval by the Facility Director.

6.5 Experiment Review and Approval

Approved EXPERIMENTS shall be carried out in accordance with established and approved procedures. In addition:

1. All new EXPERIMENTS or class of EXPERIMENTS shall be reviewed by the RSRS and approved in writing by the Facility Director or designated alternates prior to initiation; and

2. Substantive changes to previously approved EXPERIMENTS shall be made only after review by the RSRS and approval in writing by the Facility Director or designated alternates. Minor changes that do not significantly alter the EXPERIMENT may be approved by Reactor Manager or higher.

6.6 Required Actions

6.6.1 Actions to be Taken in the Event of a Safety Limit Violation

1. The reactor shall be shut down, the Facility Director shall be notified, and reactor operations shall not resume until authorized by the NRC;

2. The NRC shall be notified in accordance with Section 6.7.2; and

3. A safety limit violation report shall be prepared. The report shall describe the following:

    a. Applicable circumstances leading to the violation including, when known, the cause and contributing factors;

    b. Effect of the violation upon reactor facility components, systems, or structures and on the health and safety of personnel and the public; and

    c. Corrective action to be taken to prevent recurrence.

The report shall be reviewed by the RSRS and any follow-up report shall be submitted to the NRC when authorization is sought to resume operation of the reactor.

6.6.2 Actions to be Taken in the Event of a Reportable Occurrence of the Type Identified in Section 6.7.2(a) Other Than a Safety Limit Violation

1. Reactor conditions shall be returned to normal, or the reactor shall be shut down;

2. If it is necessary to shut down the reactor to correct the occurrence, operations shall not be resumed unless authorized by the Facility Director or designated alternates;

3. Occurrence shall be reported to the Facility Director or designated alternates and to the NRC as required in Section 6.7.2; and

4. Occurrence shall be reviewed by the RSRS at its next scheduled meeting.

6.7 Reports

6.7.1 Annual Operating Report

An annual report covering the previous calendar year shall be submitted to the NRC by November 1 of each year consisting of:

1. A brief summary of reactor operating experience including the energy produced by the reactor or the hours the reactor was critical, or both;

2. The UNSCHEDULED SHUTDOWNS including, where applicable, corrective action taken to preclude recurrence;

3. Tabulation of major preventive and corrective maintenance operations having safety significance;

4. A brief description, including a summary of the change evaluation, of changes, tests, and EXPERIMENTS implemented under 10 CFR 50.59;

5. A summary of the nature and amount of radioactive effluents released or discharged to the environs beyond the effective control of the facility licensee as determined at, or before, the point of such release or discharge. The summary shall include to the extent practicable an estimate of individual radionuclides present in the effluent. If the estimated average release after dilution or diffusion is less than 25% of the concentration allowed, a statement to this effect is sufficient;

6. A summarized result of environmental surveys performed outside the facility; and

7. A summary of exposure received by facility personnel and visitors where such exposures are greater than 25% of that allowed.

6.7.2 Special Reports

a. There shall be a report not later than the following working day by telephone and confirmed in writing by facsimile or similar conveyance to the NRC, to be followed by a written report that describes the circumstances of the event within 14 days of any of the following:

1. Violation of safety limit;

2. Release of radioactivity from the site above allowed limits;

3. MODE 1 or MODE 2 operation with actual trip system settings for required systems less conservative than the limiting safety system settings;

4. MODE 1 or MODE 2 operation in violation of limiting conditions for operation unless prompt remedial action is taken as permitted in Section 3;

5. A reactor safety system component malfunction that renders or could render the reactor safety system incapable of performing its intended safety function. If the malfunction or condition is discovered during MODES or conditions in which the LCO is not applicable then no report is required;

   Note: Where components or systems are provided in addition to the minimum required by the Technical Specifications, the failure of the extra components or systems is not considered reportable provided that the minimum number of components or systems specified or required are capable of performing their intended function.

6. An unanticipated or uncontrolled change in reactivity greater than 720 pcm. Reactor trips resulting from a known cause are excluded;

7. Abnormal and significant degradation in reactor fuel or cladding, or both, coolant boundary (excluding minor leaks), or REACTOR CELL boundary (excluding minor leaks) where applicable; or

8. An observed inadequacy in the implementation of administrative or procedural controls such that the inadequacy causes or could have caused the existence or development of an unsafe condition with regard to reactor operations.

b. There shall be a written report within 30 days to the NRC of the following:

1. Permanent changes in the facility organization of Level 1 or 2 personnel; and

2. Significant changes in the transient or accident analyses as described in the Safety Analysis Report.

6.8 Records

6.8.1 Records to be Retained for a Period of at Least Five Years or for the Life of the Component Involved if Less Than Five Years

1. Normal reactor operation (but not including supporting documents such as checklists, log sheets, etc., which shall be maintained for a period of at least one year),

2. Principal maintenance operations,

3. Reportable occurrences,

4. Surveillance activities required by the Technical Specifications,

5. Reactor facility radiation and contamination surveys where required by applicable regulations,

6. EXPERIMENTS performed with the reactor,

7. Fuel inventories, receipts, and shipments,

8. Approved changes in operating procedures, and

9. Records of meetings and audit reports of the RSRS.

6.8.2 Records to be Retained for at Least One Training Cycle

Record of retraining and requalification of operators shall be maintained at all times the individual is employed or until the operators license is renewed.

6.8.3 Records to be Retained for the Lifetime of the Facility

1. Gaseous and liquid radioactive effluents released to the environs,

2. Offsite environmental monitoring surveys,

3. Radiation exposures for all personnel monitored, and

4. Drawings of the reactor facility.

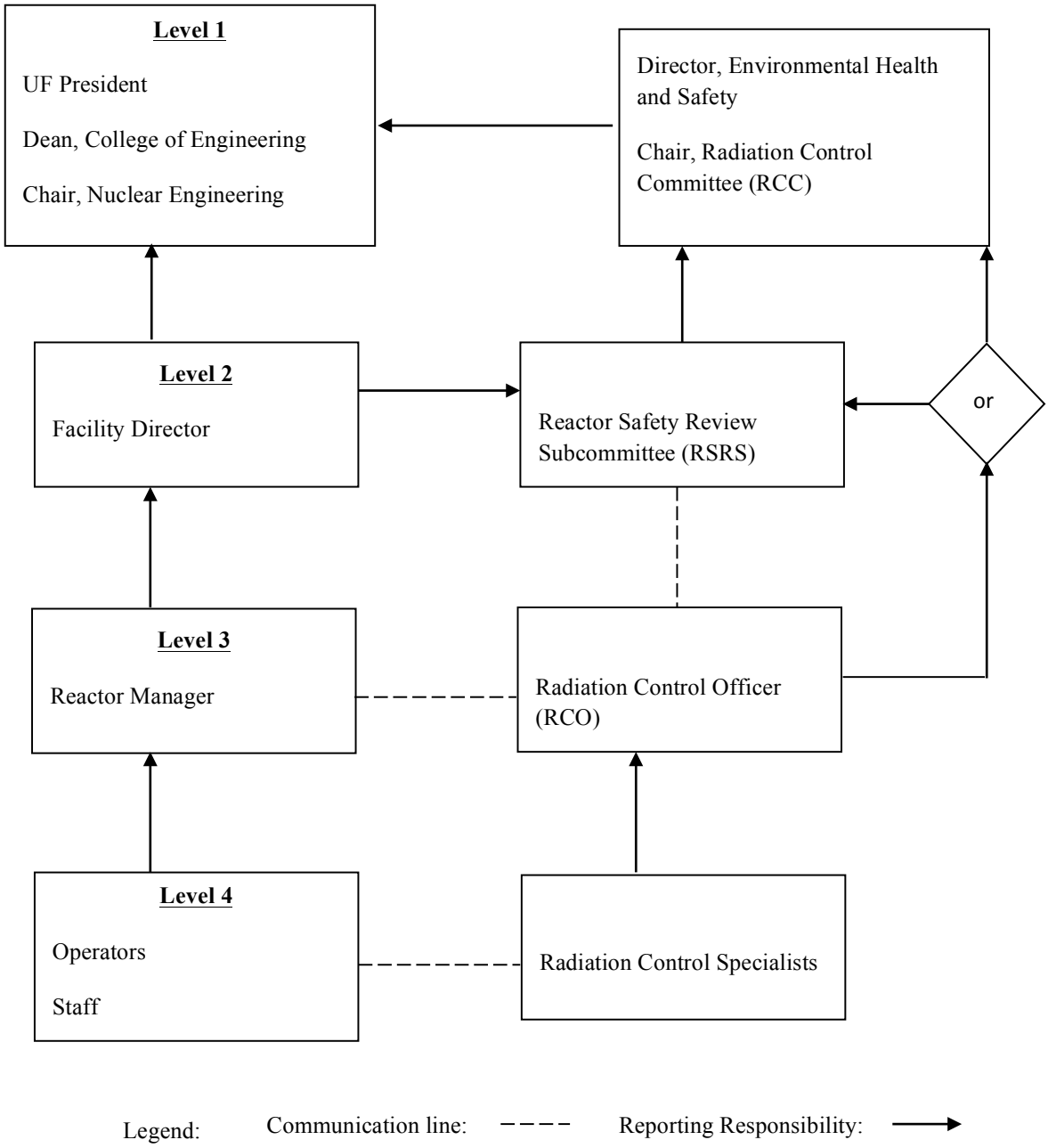

Figure 6-1 UFTR Organizational Chart