SCHEME NUMBER	MCC	SU NO.	CHANNEL	WIRE PREFIX	CS	PS-1	PS-2	EQUIPMENT F1	F2	B	M	C1	MVA	MVB	MVC	J	DESCRIPTION
BE1299	E12F	024	A	CP1	HIS-1130	PS-1133	PS-2902	FPS1133	FPS2902	BE1299	MC0111	C3615	MV3611A	MV3611B	MV3611C	JT3693	EMER. DG STARTING AIR CMPSR 1-1

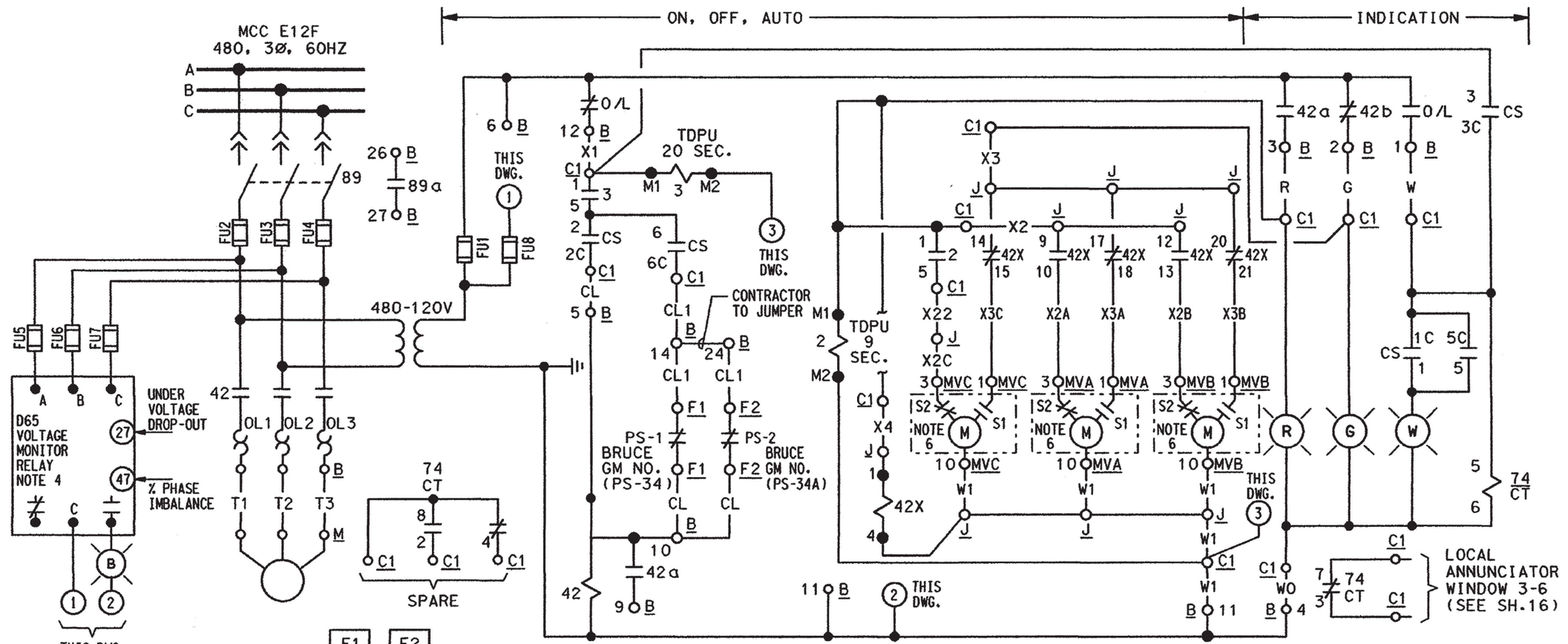

SCHEME NO. BE1299

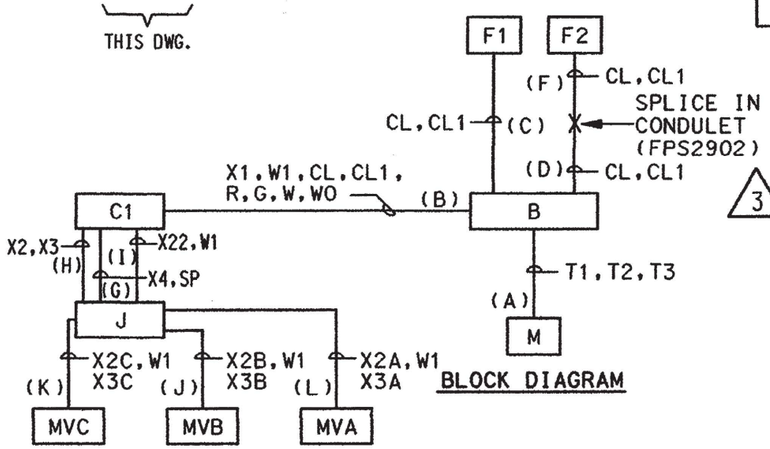

BLOCK DIAGRAM

NOTES:

1. FOR GENERAL NOTES AND LOCATION DESIGNATIONS SEE DWG. INDEX E-64B.
2. FOR SWITCH DEVELOPMENT INFORMATION SEE DWG. E-30B SH.6A FIG. 6.
3. PS-1 & PS-2 CLOSE AT 227 PSIG & OPEN AT 250 PSIG.
4. VOLTAGE MONITOR RELAY IS SELF POWERED. CONTACTS ARE SHOWN IN SHELF STATE (DE-ENERGIZED). SEE RELAY SETTING MANUAL FOR SET POINTS. (ECR 03-0507-00)
5. MVA, MVB, MVC ARE MOTOR ACTUATED VALVES WITH INTERNAL SWITCHES (S1 & S2) AND ARE SHOWN IN THE OPEN POSITION. WHEN THE VALVE IS GIVEN POWER THRU S2 AND BEGINS TO CLOSE, S1 CLOSES AND WHEN THE VALVE IS FULLY CLOSED, S2 OPENS. WHEN THE VALVE IS GIVEN POWER THROUGH S1 AND BEGINS TO OPEN, S2 CLOSES AND WHEN THE VALVE IS FULLY OPEN S1 OPENS.
6. CONTACTS S1 AND S2 ARE INTERNAL TO VALVE ACTUATOR.
7. 42 DEVICES CONTAIN CONTACTS WHICH MAY CHATTER DURING A SEISMIC EVENT. SEE ECP 08-0709 FOR DETAILS.

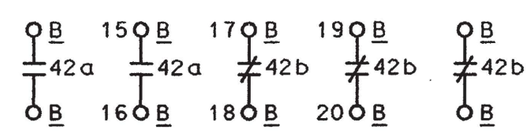

SCALE NONE	DESIGNED ---	DRAWN JOR	DATE 04-20-04

DAVIS-BESSE NUCLEAR POWER STATION
UNIT NO. 1

ELEMENTARY WIRING DIAGRAMS
EMER DSL. GENS.
AIR COMPRESSOR 1-1

DRAWING NO.	REV.
E-64B SH.7A	3

REV.	DESCRIPTION	DATE	DR	CHK	SUPV	CHIEF	PROJ	OWNER	OWNER
3	INC. DUN 11-0147-001-001 REV.00	11/4/11	SBW						
0	GEN. UPDATE FOR ECR 03-0507-00 PER DCN E-64B-435 AND ADD NOTE 4 REF. IN D65 VOLTAGE MONITOR RELAY BOX FOR CLARITY	5/22/04							

INITIALS ON FILE

DR 10-06-11 DFN=F:/SCHEME/E64BSH7A.DGN