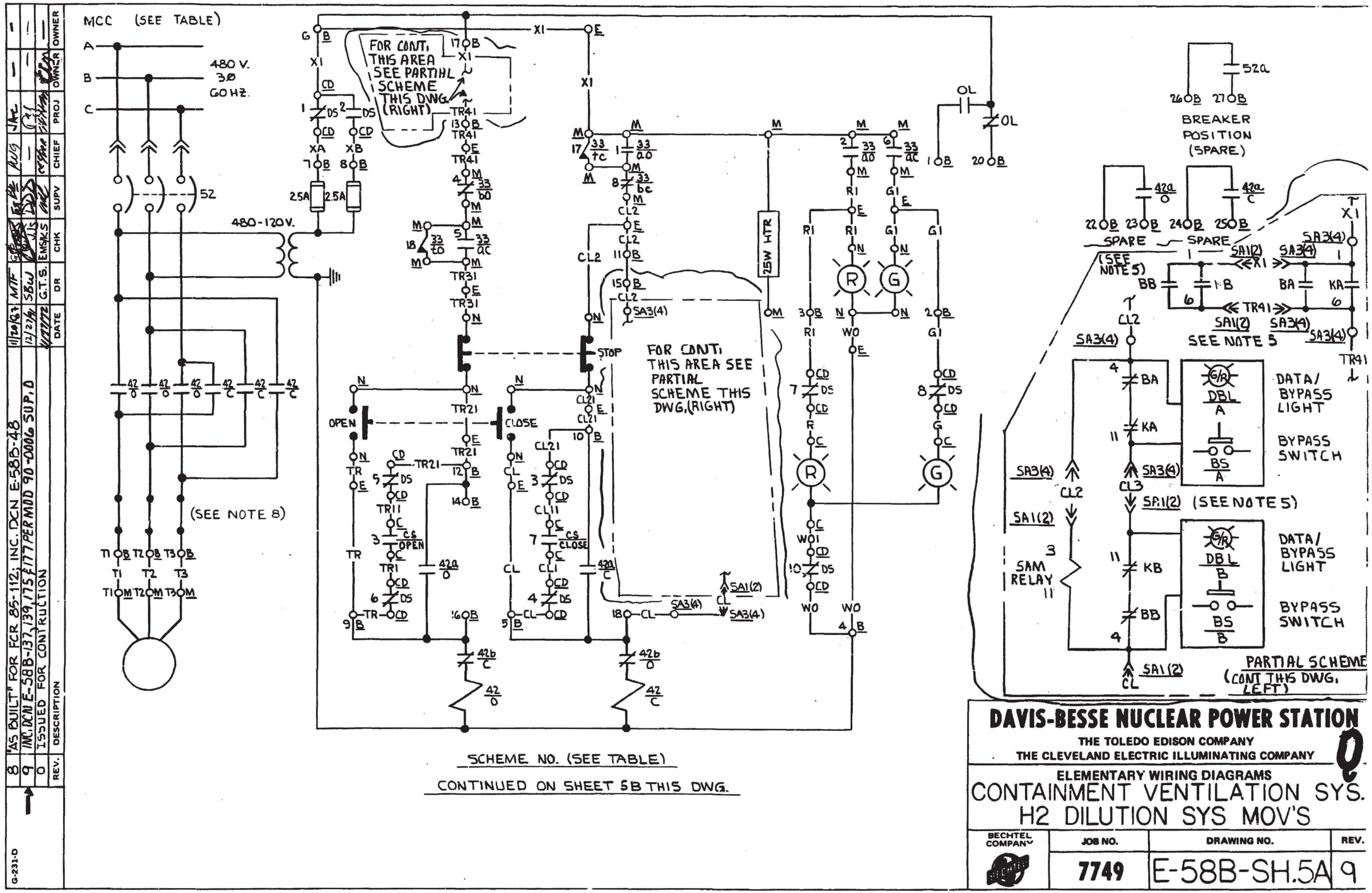

REV.	DESCRIPTION	DATE	DR	CHK	SUPV	CHIEF	PROJ	OWNER
8	"AS BUILT" FOR FCR 85-112; INC. DCN E-58B-48	11/20/87	MTF					
9	INC. DCN E-58B-137, 139, 175 & 177 PER MOD 90-0006 SUP. D	12/27/91	SBW					
0	ISSUED FOR CONTRUCTION	11/27/72	G.T.S.	EMSKS				

G-231-D

DAVIS-BESSE NUCLEAR POWER STATION

THE TOLEDO EDISON COMPANY
THE CLEVELAND ELECTRIC ILLUMINATING COMPANY

ELEMENTARY WIRING DIAGRAMS

CONTAINMENT VENTILATION SYS.
H2 DILUTION SYS MOV'S

BECHTEL COMPANY	JOB NO.	DRAWING NO.	REV.
	7749	E-58B-SH.5A	9