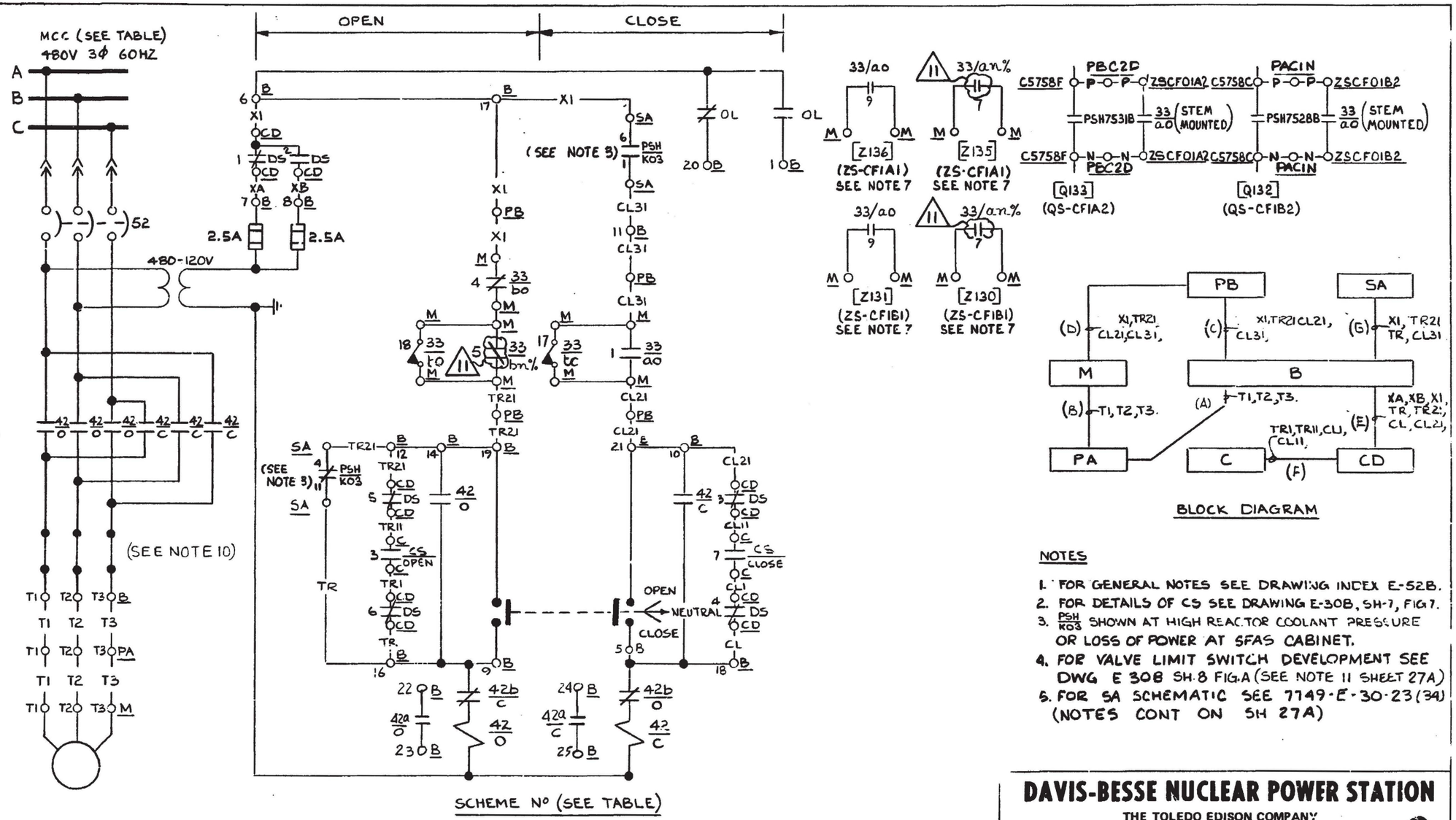

NOTES

1. FOR GENERAL NOTES SEE DRAWING INDEX E-52B.
2. FOR DETAILS OF CS SEE DRAWING E-30B, SH-7, FIG 7.
3. PSH KO3 SHOWN AT HIGH REACTOR COOLANT PRESSURE OR LOSS OF POWER AT SFAS CABINET.
4. FOR VALVE LIMIT SWITCH DEVELOPMENT SEE DWG E 30B SH.8 FIG.A (SEE NOTE 11 SHEET 27A)
5. FOR SA SCHEMATIC SEE 7749-E-30-23(34) (NOTES CONT ON SH 27A)

SCHEME Nº	M.C.C.	START UP Nº	CHANNEL	WIRE PREFIX	CS	EQUIPMENT M	C	B	PA	PB	SA	CD	PRESSURE SWITCH PSH	DESCRIPTION
BF1120	F11A	51	2	F1B	HISCF1A	MVCF01A	CS716	BF1120	P2P5F	P2C5G	CS755C	CDF11A-1	PSH7529A	CF.TK. 2 INJ. ISO. VLV.
BE1162	E11B	51	1	F1A	HISCF1B	MVCF01B	CS716	BE1162	P1P2M	P1C2L	CS763D	CDE11B-1	PSH7530A	CF TK 1 INJ ISO. VLV.

REV.	DESCRIPTION	DR	CHK	SUPV	CHIEF	PROJ	OWNER	OWNER
11	INC D'N E-52G-559 PER DCR 89-0359							
10	INC. IAW E-52P-444 PER FCR 87-0128, SUP 46							
0	ISSUED FOR CONSTRUCTION	GFB	EMS/KS					

DAVIS-BESSE NUCLEAR POWER STATION

THE TOLEDO EDISON COMPANY
THE CLEVELAND ELECTRIC ILLUMINATING COMPANY

ELEMENTARY WIRING DIAGRAMS

REACTOR COOLING SYSTEM
CF TANK 1&2 ISO. VLV'S

BECHTEL COMPANY	JOB NO.	DRAWING NO.	REV.
	7749	E-52B SH-27	11