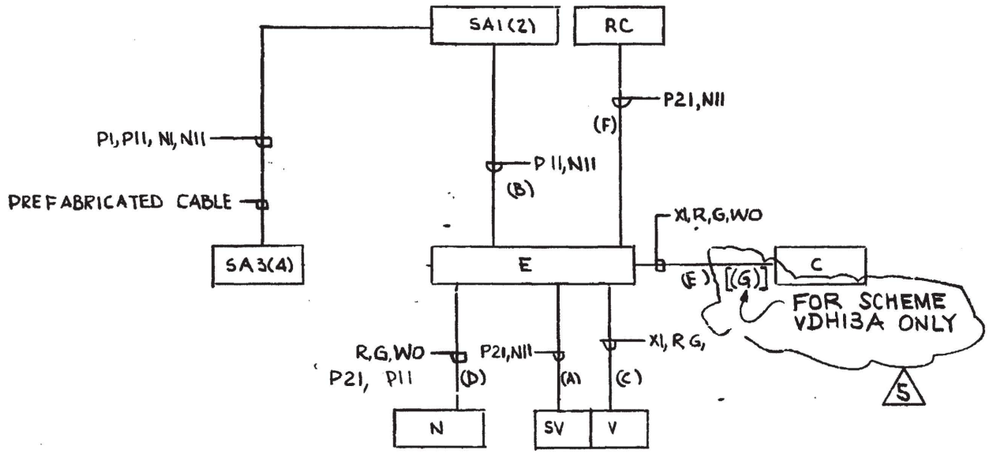

BLOCK DIAGRAM

SCHEME	S.U NO	CHANNEL	WIRE PREFIX	CS	EQUIPMENT NUMBERS C	E	N	SV	V	SA1	SA2	SA3	SA4	RC	QS	SA OUTPUT RELAY KA	KB	DESCRIPTION
VDH13A	49	2	CBB	HISDH13A	C5717	EV1469	NVDH13A	SVDH13A	VDH13A	—	C5755C	—	C5756D	—	—	K31 F	K31 F	DH CLR 2 BYPASS VLV
VDH13B	49	1	CBA	HISDH13B	C5717	EV1467	NVDH13B	SVDH13B	VDH13A	C5762C	—	C5763D	—	—	—	K31 F	K31 F	DH CLR-1 BYPASS VLV
VDH14A	49	2	CB	HISDH14A	C5717	EV1469	NVDH14A	SVDH14A	VDH14A	—	C5755C	—	C5756D	RC2701	QSDH14A	K31 E	K31 E	DH CLR-2 OUT VLV
VDH14B	49	1	CA	HISDH14B	C5717	EV1467	NVDH14B	SVDH14B	VDH14B	C5762C	—	C5763D	—	RC3704	QSDH14B	K31 E	K31 E	DH CLR 1 OUT VLV

FOR NOTES SEE SH 25A

REV.	DESCRIPTION	DATE	DR	CHK	SUPV	CHIEF	PROJ	OWNER	OWNER
4	INCORPORATED SRN 162E	9-17-76	R.W.S	LEW	SMC	—	SNS	—	—
0	ISSUED FOR CONSTRUCTION	1/27/73	CP	EMS/KS	[illegible]	[illegible]	[illegible]	[illegible]	—

DAVIS-BESSE NUCLEAR POWER STATION

THE TOLEDO EDISON COMPANY
THE CLEVELAND ELECTRIC ILLUMINATING COMPANY

ELEMENTARY WIRING DIAGRAMS

REACTOR COOLING SYSTEM
DH CLR OUT & BYPASS VLV

BECHTEL COMPANY	JOB NO.	DRAWING NO.	REV.
	7749	E52B SH 25B	5

I certify that the image contained on this frame was made in the normal