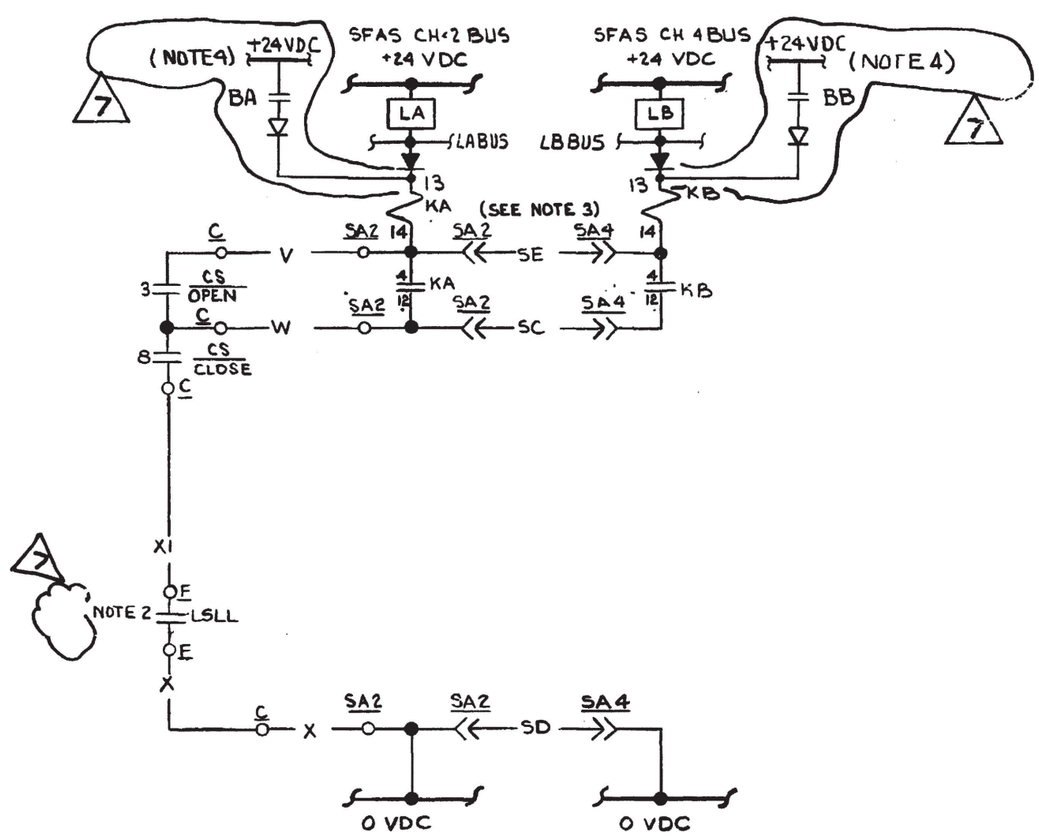

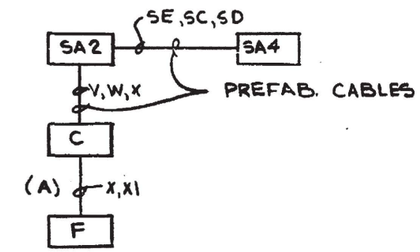

BLOCK DIAGRAM

NOTES

1) FOR GENERAL NOTES SEE DWG E50B INDEX SHEET
2) LSLL CONTACT OPENS ON LOW LOW LEVEL AT COMPONENT CLNG SURGE TANK SEE LEVEL SETTING DIAGRAM M558 SHEET 5 FOR LSLL SET POINTS.
3) FOR VENDOR DWG. REFER TO E-17B, SEE VENDOR DWG. FOR SFAS INTERNAL WIRING.
4) BYPASS VOLTAGE IS DERIVED FROM THE STATION BATTERY, SEE DWG. E-30-339.

SCHEME NO.	S.U. NO.	CH	WIRE PREFIX AT MAIN CTRL BD	CS	EQUIPMENT				SA OUTPUT RELAY		DESCRIPTION
					C	F	SA2	SA4	KA	KB	
SF1724	16	2	ECC	H151460	C5717	LSLL3758A	C5755C	C5756D	K32A	K32A	CC VLV TO MAKE UP PUMP

DAVIS-BESSE NUCLEAR POWER STATION

THE TOLEDO EDISON COMPANY
THE CLEVELAND ELECTRIC ILLUMINATING COMPANY

ELEMENTARY WIRING DIAGRAM
COOLING WATER SYSTEM
CC VLV TO MAKE UP PUMP

BECHTEL COMPANY	JOB NO.	DRAWING NO.	REV.
	7749	E 50B SH 12B	7

REV.	DESCRIPTION	DATE	DR	CHK	SUPV	CHIEF	PROJ	OWNER	OWNER
6	INC DCN E-50B-127 PER DCR 88-0552								
7	INC. DCN E-50B-208 PER MOD 90-0006 SUP.0	9/11/92	SBW						
0	ISSUED FOR CONSTRUCTION (INC SRN 27E)	4-17-75	TLD	ARC	SMS	RKLAMB			

G-231-D

N15138

I CERTIFY THAT THE IMAGE CONTAINED ON THIS FRAME WAS MADE IN THE NORMAL AND REGULAR COURSE OF BUSINESS, ON THE DATE STATED BELOW AND THAT IT IS AN ACCURATE REPRODUCTION OF THE RECORD(S) SUBMITTED TO NUCLEAR RECORDS MANAGEMENT.
DATE 4-24-92 OPERATOR Beth Wiellie 16X