NEWFAX 3/85 N58313

ED 7489

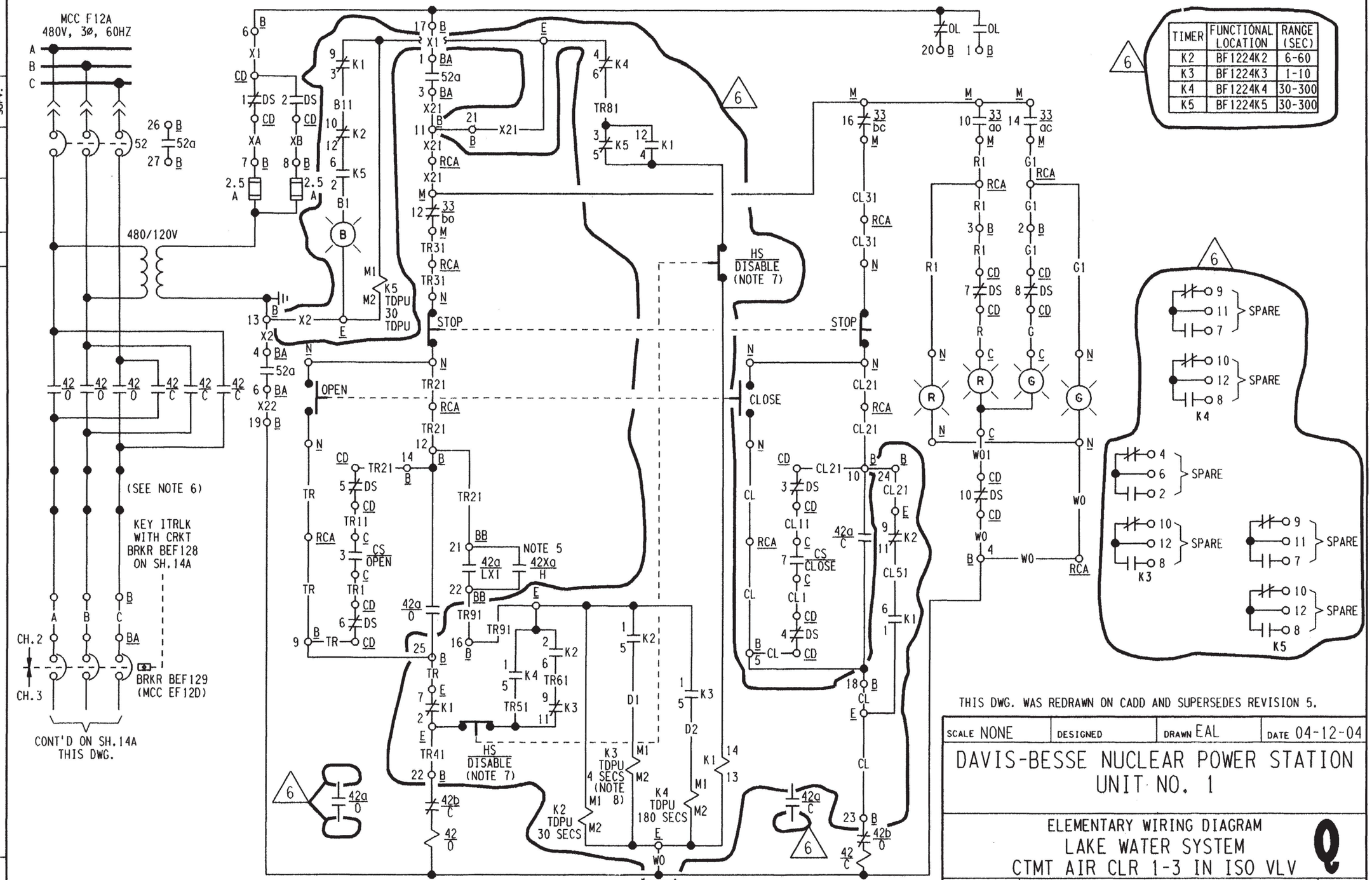

TIMER	FUNCTIONAL LOCATION	RANGE (SEC)
K2	BF1224K2	6-60
K3	BF1224K3	1-10
K4	BF1224K4	30-300
K5	BF1224K5	30-300

THIS DWG. WAS REDRAWN ON CADD AND SUPERSEDES REVISION 5.

SCALE NONE	DESIGNED	DRAWN EAL	DATE 04-12-04

DAVIS-BESSE NUCLEAR POWER STATION
UNIT NO. 1

ELEMENTARY WIRING DIAGRAM
LAKE WATER SYSTEM
CTMT AIR CLR 1-3 IN ISO VLV

DRAWING NO.	REV.
E-48B SH.14B	6

NO.	DATE	REVISIONS	CH'K	ENGR.	ENGR. SUPV.	GEN. SUPV.
6	9/22/04	INC. DCN E-48B-460 PER ECR 03-0533-01 REV.3 (REDRAWN)	SBW	—	TRS	—

DB 04-12-04 DFN= F:/SCHEME/E48BS14B.DGN