DAVIS-BESSE NUCLEAR POWER STATION UNIT NO. 1

SECTION 9.0

FIRE PROTECTION SAFETY ANALYSIS

9.0 FIRE PROTECTION SAFETY ANALYSIS

9.1 Fire Protection System

The DBNPS fire protection program is described in NG-DB-00302, DBNPS Fire Protection Program. The program describes the overall fire protection effort and establishes the fire protection policy for the protection of Appendix R safe shutdown equipment required in the event of a fire. The program identifies the various positions, responsibilities and authorities within the organization and addresses Fire Brigade training, controls over combustibles and ignition sources and includes procedure for fire fighting, equipment testing and quality assurance. The program also describes the specific implementation features and the means to limit fire damage to Appendix R safe shutdown equipment required in the event of a fire so that the capability to safely shutdown is ensured.

The program is under the overall responsibility of the Vice-President - Nuclear who is provided with staff personnel knowledgeable in both fire protection and plant systems.

The program extends the concept of defense in-depth to fire protection in fire areas containing Appendix R safe shutdown equipment required in the event of a fire. The objectives of this concept are to:

- Prevent fires from starting;
- Detect rapidly, control and extinguish promptly those fires that do occur; and
- Provide protection for Appendix R safe shutdown equipment required in the event of a fire so that a fire that is not promptly extinguished by fire suppression activities will not prevent the safe shutdown of the plant.

All provisions of the approved fire protection program will be implemented and maintained subject to the following provision: Changes to the approved fire protection program may be made without prior approval of the Nuclear Regulatory Commission only if those changes would not adversely affect the ability to achieve and maintain safe shutdown in the event of a fire.

9.1.1 Design Bases

The fire protection systems are designed, installed, and tested to satisfy the intent of the requirements of National Fire Protection Association Codes (NFPA), American Nuclear Insurers (ANI), the Uniform Building Code and local Fire Department codes and regulations. However, certain deviations from the requirements are due to the plant-specific configurations and operation not anticipated by these general requirements. Deviations from NFPA Codes are identified in the NFPA code evaluation reports.

The fire protection systems meet the guidelines of Appendix A of BTP APCSB 9.5-1 and General Design Criteria 3 as described in other sections of the Davis-Besse Fire Hazard Analysis Report (FHAR).

Alternative methods of compliance with 10CFR50, Appendix R were proposed via exemption requests by Toledo Edison These exemption requests address:

- the lack of fixed fire suppression in the Control Room.

- the lack of 3-hour fire barriers separating the Component Cooling Water (CCW) pumps.
- the volume of the Reactor Coolant Pump Oil Collection System.
- Deleted.
- the lack of a UL-rating for Fire Door 215 separating the two Auxiliary Feedwater (AFW) Pump Rooms.
- the lack of fixed fire suppression in Fire Areas “R”, “EE” and “AB” that require alternative shutdown capability.
- the use of AC/DC essential lighting in place of 8-hour battery supplied emergency lighting in certain areas.
- the lack of separation of the redundant Appendix R safe shutdown Containment Air Cooler (CAC) fans and circuits by a distance of 20 feet with no intervening combustibles.
- the lack of separation of various redundant Appendix R safe shutdown circuits in Manhole 3001 by a distance of 20 feet with no intervening combustibles, and the lack of fixed fire suppression and fire detection.
- the lack of 3-hour fire barriers separating Appendix R redundant safe shutdown circuits located within embedded conduits in certain walls, floors and ceilings.
- the lack of fixed fire suppression and detection systems in Fire Area “HH” that requires alternative shutdown capability.

The alternatives proposed by these exemption requests were determined to be adequate and the NRC granted the exemptions.

The fire protection systems provided to protect structures, systems and components required to achieve and maintain safe shutdown in post-fire conditions are described in the FHAR. The identification, location and availability of this Appendix R safe shutdown equipment is discussed in the FHAR.

The operability of the fire detection instrumentation ensures that adequate warning capability is available for the prompt detection of fires. This capability is required in order to detect and locate fires in their early stages. Prompt detection of fires will reduce the potential for damage to redundant Appendix R safe shutdown equipment required in the event of a fire and is an integral element in the overall facility fire protection program.

In the event that certain instrumentation of the fire detection system is not functional, monitoring of the affected areas is required to provide detection capability until the not functional instrumentation is restored to operability.

The operability of fire suppression systems ensures that adequate fire suppression capability is available to confine and extinguish fires occurring in those portions of the facility containing redundant Appendix R safe shutdown equipment required in the event of a fire. The fire suppression systems consist of the water systems, spray and sprinkler systems, fire hose stations and yard fire hydrants. The collective capability of the fire suppression systems is adequate to minimize potential damage to redundant Appendix R safe shutdown equipment required in the event of a fire and is a major element in the facility fire protection program.

In the event that portions of the fire suppression systems are not functional, compensatory measures are required until the not functional equipment is restored to service. A backup fire suppression water system may consist of a local fire department pumper, backup pump or any other system(s) allowed by plant procedures or determined by the Fire Protection Engineer to be adequate. A backup fire suppression system for the sprinkler, hydrants and hose stations may consist of portable extinguishers, additional fire hoses or any other system(s) allowed by the plant procedures or determined by the Fire Protection Engineer to be adequate. As a backup, the local off-site water system has a hydrant at the DBAB and the site supply line to the Domestic Water System has fire hydrants at the Warehouse and south of the Protected Area. It also provides a limited alternate source of water for the Main Warehouse Fire Supply line and can supply the site fire distribution system by way of the Warehouse Fire Supply line.

The operability of the fire barriers ensures that a fire will be confined or adequately retarded from spreading to adjacent fire areas or to portions of redundant Appendix R safe shutdown systems required in the event of a fire located within the same fire area. This design features minimizes the possibility of a single fire rapidly involving several fire areas of the facility prior to detection and extinguishment. The fire barriers are passive elements in the facility fire protection program.

Fire barriers, including cable penetration barriers, fire doors, and fire dampers, are considered operable when the visually observed condition is the same as the as-designed condition. For those fire barriers that are not in the as-designed condition, an evaluation would be performed to show that the fire rating of the fire barriers is not degraded and that the barrier is operable, or the fire barriers would be declared not functional following completion of the evaluation.

Certain fire detection instrumentation automatically actuates fire suppression and water curtain deluge systems. The water curtain deluge systems provide a fire barrier function and are not intended for fire suppression. The compensatory measures applicable to fire barriers are also applicable and adequate for the water curtain deluge systems.

The water distribution system is designed with sectionalizing valves such that failure in any part of the system can be isolated so that the remainder of the system can function. The system arrangement and component designs are such that an accidental release of water in critical equipment areas does not prevent safe shutdown of the station. Drainage systems for sprinklered areas are sized to carry away the flow from the sprinklers as discussed in other sections of the FHAR. Fire suppression systems are designed to ensure at least one train of redundant Appendix R safe shutdown equipment will be maintained free of damage from the effects of inadvertent or induced suppression system actuation.

The system is designed to accommodate a single failure. The piping arrangement is such that a single failure does not affect critical equipment in two parallel Class I systems.

Noncombustible and heat resistant materials with flame spread ratings of 25 or less are used wherever practical throughout the station.

9.1.2 System Description

9.1.2.1 Water Suppression Systems

The water fire protection system consists of one full capacity 2500 gpm electric motor-driven fire pump, one full capacity 2500 gpm diesel driven fire pump, a separate pressure maintenance (jockey) pump, two separate water sources, and a yard loop with sectionalizing post-indicator isolation valves.

A system functional drawing is shown in Section 9.5 of the USAR.

A 300,000 gallon fire water storage tank is filled with treated water by means of the station water treatment system. High and low water levels are alarmed in the Control Room, using pressure switches. A minimum of 250,000 gallons of water is available in the fire water storage tank at all times. The 2500 gpm electric fire pump takes suction from the storage tank. The discharge from this pump is connected to the station underground fire yard loop. The pump is automatically started when the system pressure drops to 115 psig. The pump nominal capacity is 2500 gpm at a total head of 290 ft. A jockey pump, running continuously, maintains the pressure at a minimum of 135 psig at the discharge of the pump.

A diesel vertical fire pump is located in the intake structure taking suction from the intake forebay from Lake Erie. The pump nominal capacity is 2500 gpm at a total head of 290 ft. The discharge from this pump is also connected to the station underground fire yard loop. The diesel engine fire pump is designed to automatically start when the fire suppression system pressure drops to a predetermined value and the time delay relay has timed out. The diesel fire pump also starts automatically on low level in the fire water storage tank and on loss of power to the diesel driven fire pump controller. Both pumps require manual shut-off.

The off-site local water system normally supplies only the Domestic Water System. It has a 500,000 gallon storage tank off-site on Route 2 and water is available through three hydrants in the Owner Controlled Area to supply local fire pumper trucks as a backup. It also provides a limited alternate source of water for the Main Warehouse Fire supply line and can supply the site fire distribution system by way of the Warehouse Fire Supply line.

Fire hydrants are connected to the main underground fire yard loop around the periphery of the station. The hydrant spacing is adequate to ensure the availability of water for manual fire fighting.

A distribution header loop is provided within the turbine building with four branch feeders. Each section of the header loop and each branch line are provided with isolation valves. The headers supply readily accessible, mounted, fire hose stations located throughout the turbine and auxiliary buildings.

Hose cabinets, racks and reels are provided throughout the auxiliary building. Each contains a nominal 75, 100, or 125 feet of 1-1/2 in. hose with a combination fog and straight stream fire nozzle, a separate 2-1/2 in. hose connection for local fire department use, and a portable fire extinguisher. Additional CO_2 and dry chemical fire extinguishers are provided throughout the building where they are readily available to electrical equipment locations.

Hose rack units are provided in the turbine building. Each rack is provided with a nominal 75, 100 or 125 feet of fire hose and an adjustable fog and straight stream hose nozzle. Adjacent to

each hose rack is a separate 2-1/2 in. hose connection for local fire department use. Portable CO_2 and dry chemical fire extinguishers are located near electrical equipment.

The sprinkler systems, their spray densities and locations are described in the plant drawings and calculations.

All fire, smoke, and flow alarms in the sprinkler headers in the plant are annunciated in the station control room.

9.1.2.2 Fire Detection System

The fire detectors consist of the following types:

a. The ionization type smoke detectors sensitive to products of combustion are used to provide the earliest possible warning of fire where an incipient stage of fire development exists.

b. Photoelectric type smoke detectors sensitive to visible smoke are installed in the HVAC system to shut down fans and to close duct louvers and are located in other rooms as area detectors.

c. Flame detectors sensitive to a combination of ultra-violet and modulated infrared light energy will alarm from areas where ignition will be almost instantaneous.

d. Thermal fire detectors of the combination fixed temperature/rate compensated type are used where large quantities of heat could be produced. Reliability is factory tested.

e. Ultraviolet/infrared flame detectors sensitive to the ultraviolet and infrared radiation emanating from flames.

Reliable operation is assured through continuous electrical supervision of the detectors, and should a circuit malfunction a trouble alarm will be annunciated in the control room.

Detectors have been located in many areas not covered by sprinkler systems and where a danger of fire is assumed to exist as described in other sections of the FHAR. All major electrical equipment, such as large motors, switchgear assemblies, generators, motor control centers, electrical cabinets, and large concentrations of cable trays, have ionization or photoelectric detectors installed to detect the incipient or smoldering stages of fire.

In addition to the ceiling mounted detectors, smoke and heat detectors are installed in certain HVAC ducts.

In areas where significant quantities of oil may be used, such as the emergency diesel generator room, emergency diesel generator day tank rooms, and diesel fire pump rooms, detectors and sprinkler systems have been installed. In the emergency diesel generator rooms, photoelectric smoke detectors and preaction sprinkler systems have been provided. In the diesel fire pump room, photoelectric smoke detectors and manually-operated dry pipe, fusible head type sprinkler system has been installed. In the emergency diesel generator day tank rooms, wet pipe, fusible head type automatic sprinkler systems have been installed. Flow indicating switches installed in each sprinkler system have been provided for alarm.

The fire detection system for Davis-Besse is considered to be a vital portion of the overall fire protection program.

Based on the defense-in-depth concept, the fire detection system is designed with the logic that it would detect a fire condition quickly, have a high level of reliability, and relay information to the control room in such a manner so that the operators can make intelligent decisions as to the necessary course of action to handle the fire emergency and maintain essential plant safe shutdown functions.

The fire detection system is comprised of nine microprocessor based fire control panels linked together with a Node Display Unit (NDU) in a network. This network consists of one fire control panel and the NDU in the control room and eight remote fire control panels. Individual fire zones or panels of zones report to the NDU. See Figure 9-1 for a diagram of the network. The fire control panels are distributed throughout the plant on the various elevations and in the intake structure. The specific local fire detection panel or panels for a given elevation are located close to the main access point to that elevation.

This allows direct access to the panel for emergency services personnel. In general, the fire detection zones for any given elevation directly report to the local fire alarm panel on the same elevation. The HVAC duct detectors are not considered part of the area fire detection system since their function is to help limit smoke spread and not to provide fire location information.

The typical mode of operation that the system undertakes is as follows:

a. Fire Detection Zones

1. The fire sensor (ionization type, ultraviolet/infrared flame type, photoelectric or thermal fire detector) affected by the fire, senses the fire condition, be it smoke particles, thermal conditions, or flame.

2. The fire sensors located within the rooms or plant areas react to the fire condition and complete the detection or alarm initiating circuits.

3. After receiving a signal over the alarm initiating circuit, a red light illuminates on the local fire alarm panel. The red light appears on the zonal module associated with the affected fire zone. In addition to the visual alarm, an audible alarm sounds at the local fire alarm panel.

4. The alarm signal is relayed to the Fire Detection System/Radiation Monitor System (FDS/RMS) console. This signal, which includes the fire sensor identity and location, is displayed on an 80 character LCD display and as an Red LED, is also displayed on the FDS/RMS Screen, and is also printed on the line printer. A plant annunciator window visually and audibly activates to alert the operators that information is being displayed on the FDS/RMS console.

5. At this time, Control Room operators will validate the alarm by dispatching appropriate personnel to the affected panel or zone. Receipt of multiple fire sensor alarms or other diverse indications of a fire require fire brigade assembly. In Room 404 (SFP corridor), Room 323 (High Voltage Switchgear Room) and Room 428 (Low Voltage Switchgear Room)

requires the immediate assembly of the fire brigade upon the receipt of a fire alarm in the control room. By referring to the applicable plant procedures, personnel can take the necessary actions to safely achieve and maintain safe shutdown. (Reference TE Letter No. Serial 1-893, dated September 30, 1989).

b. Wet Pipe Sprinkler System

1. Heat from the fire causes the heat-sensitive sprinkler head(s) to open, thereby, spraying water directly on the fire.

2. The pressure switch for the specific sprinkler system affected by the fire reacts to the sprinkler system's water flow and activates the initiating circuit.

3. The audible/visual local fire control panel and control room alarms, signal transmission, and message display of the fire condition is the same as described above (under Fire Detection Zones).

4. In addition to the alarm generated by the water flow, an alarm is also generated by any detectors located in the sprinkler area.

c. Pre-Action Sprinkler System

1. The detector senses the impending fire and activates the initiating circuit to the local fire control panel.

2. The audible/visual local fire control panel and control room alarms, signal transmission, and message display of the fire condition is the same as described above (under Fire Detection Zones).

3. In addition, the local fire control panel simultaneously transmits a fire signal to the pre-action sprinkler system release control panel.

4. The release control panel energizes the solenoid valve circuit causing the normally closed sprinkler system control valve to open. This allows water to enter the sprinkler system piping downstream of the control valve.

5. When sufficient heat from the fire opens the heat-sensitive sprinkler(s), water sprays directly on the fire.

6. The pressure switch for the specific sprinkler system affected by the fire reacts to the flow of water. The mode of operation is then similar to that described under "Wet Pipe Sprinkler System".

   (NOTE: Fast response by the fire brigade to the initial fire alarm generated by the detectors could prevent the fire from intensifying to the point where the heat-sensitive sprinkler open. By fast response, water damage and cleanup could be eliminated.)

d. Deluge-Type Sprinkler System

1. The fire sensors located within the room or plant area sense the fire condition and react by activating the initiating circuit.

2. The audible/visual local fire control panel and control room alarms, signal transmission, and message display of the fire condition is the same as described above (under Fire Detection Zones).

   In addition, a timer is activated at the local fire control panel. After the 10-minute timing cycle is complete, a fire signal is sent to two (2) separate deluge valve release control panels. A timer is not provided for the transformer Deluge Sprinkler Systems.

   The deluge systems for the Main Transformer, and Startup Transformer 01 and 02 are interlocked with their respective transformers. The interlock will permit flow of water once undervoltage relays detect the transformer is de-energized. This prevents the water from spraying near exposed 345KV bushings. The interlocks do not affect local manual initiation.

3. Each release control panel actuates a solenoid valve causing the normally closed sprinkler system deluge valve to open. This allows water to enter the sprinkler system piping and flow out of the normally open sprinkler heads.

4. Pressure switches located near the deluge valves respond to the flow of water. The mode of operation is then similar to that described under “Wet Pipe Sprinkler System”.

   (NOTE: The 10-minute time delay allows operations personnel to respond to the initial alarm generated by the fire sensors. Upon arrival at the area, the operator can abort the fire signal from being transmitted to the release panel thereby preventing activation of the deluge type sprinkler system. If, after assessing the severity of the fire, use of the deluge sprinkler system is warranted, the operator can activate the deluge system.

The fire control panel alarm bells are silenced by operating silence switches at the local fire control panel or from the main control room fire panel/console.

Trouble and supervisory conditions are displayed and transmitted in a manner similar to fire alarms. At the local panels, yellow LEDs are indicative of a trouble or supervisory condition.

The following conditions constitute a trouble or supervisory condition:

a. Loss of AC or DC power to a fire control panel or release control panel

b. Single open circuit or single ground fault in the initiating circuit (detectors or pressure switch)

c. Loss of air supervision to a sprinkler head (pre-action sprinkler system only)

d. Wire-to-wire short with or without either an open or ground.

Normally, all trouble and supervisory conditions are overridden by fire alarms. Since the power to the fire control and release control panels is derived from an uninterruptible power source, the probability of losing power to these panels is considered remote. Additionally, a majority of the fire control panels have an internal backup battery power supply.

The fire control panels are connected to communicate with each other in a network fashion. This communications network will operate in Style 7 capability (per NFPA 72-1990, Table 2-7.1) such that a single short, a single open, and a single ground on the network communications circuit will not prevent any fire control panel from reporting an alarm or trouble condition to the rest of the system.

Style 4 (NFPA 72D-1975 Class B equivalent) supervision is employed where Style 6 capability (NFPA 72D-1975 Class A equivalent) was not available or where it was deemed inappropriate to use Style 6 capability. Use of Style 4 supervision includes:

a. Fire control panel alarm bell circuits

b. Initiating circuits for the release control panels associated with the pre-action sprinkler system (U.L. listed circuitry not available from Automatic Sprinkler Co.)

c. Control (Solenoid) Valve circuits (U.L. listed circuitry not available)

d. Input circuits to fire control panels from HVAC panels, flow switches, pressure switches

e. Reactor coolant pump, pressurizer, and PORV room areas

9.1.2.3 Smoke Removal

The turbine building is provided with automatic smoke and heat vents located on the roof. The auxiliary building is power-vented through the normal ventilation system. All heat and smoke vents are U.L. listed. Smoke removal and venting for plant fire areas are discussed in other sections of the FHAR and would be implemented by the Fire Brigade in accordance with plant pre-fire plans.

9.1.2.4 Fire Barriers

The fire barriers at Davis-Besse consist of fire-rated walls, floors and ceilings, electrical raceway enclosures, structural steel fire-proofing, fire doors, fire dampers and sealed penetrations. Penetrations in fire walls, floors and ceilings (e.g. fire doors, fire dampers, sealed penetrations) except unrated openings, have a fire rating at least equivalent to the fire rating of the associated barrier. The specific fire rating and location of the barriers are discussed in other sections of the FHAR.

Unrated openings in the fire barriers are also identified in other sections of the FHAR. The fire barriers containing an unrated opening were evaluated to assess their adequacy to withstand the hazards associated with the area and to protect Appendix R safe shutdown equipment

within the area from a fire outside the area. These evaluations were performed by a qualified fire protection engineer and, as necessary, a systems engineer.

9.1.2.5 Fire Brigade

A site Fire Brigade of at least 5 members is maintained on site at all times. The Fire Brigade composition may be less than 5 members for a period of time not to exceed 2 hours in order to accommodate unexpected absence of Fire Brigade members provided immediate action is taken to restore the Fire Brigade composition to at least 5 members. The Fire Brigade shall not include members of the minimum shift crew necessary for safe shutdown of the unit as specified by Technical Requirements Manual, Section 10.2.1 and any personnel required for other essential functions during a fire emergency.

The site Fire Brigade is designed to be self-sufficient with respect to fire fighting activities. The public fire department response is considered in the overall fire protection program and is relied upon only for backup capability.

The scope of the Fire Brigade training is such that each individual knows his duties and is familiar with the layout of the plant and equipment location and operation in order to permit effective fire fighting operations during times when a particular area is filled with smoke or is insufficiently lighted. The training includes drills which are pre-planned, post-critiqued and involve the simulated use of equipment. The drills are held on various shifts so that each Fire Brigade participates in a drill at least once per quarter. The public fire department is invited annually to a drill at the station.

The Fire Brigade equipment and training conform with the recommendations of the National Fire Protection Association, Appendix A to BTP APCSB 9.5-1 and supplemental NRC staff guidance as described in other sections of the FHAR.

9.1.3 Safety Evaluation

The fire protection system is designed to operate and/or fail without inducing failure of redundant Appendix R safe shutdown equipment. Extinguishing materials used in the fire protection system are compatible with safety feature equipment.

The potential fire hazards and their relationship to Appendix R safe shutdown equipment important to safe shutdown is discussed in other sections of the FHAR. Heat and flame resistant construction materials and noncombustible construction is employed throughout buildings to minimize fire potential, whenever practical.

Class 1E power, control and instrumentation cables passed the flame test equivalent of the then current IEEE No. 383 Flame Test.

Insulation, with U.L. ratings of 25 for flame spread, fuel contributed, and smoke generated, is provided for ductwork above the ceiling of the control room.

Fire barrier walls are provided to isolate hazardous areas as discussed in other sections of the FHAR.

The fire detection and alarm system is employed at appropriate locations throughout the plant. The design philosophy utilized is that of rapid detection and location of any combustion, so that corrective measures can be quickly applied.

In the event of a fire in one of the sprinkler protected areas, the operation of the applicable sprinkler system will cause system pressure to decrease, which is normally maintained by the jockey pump, thus sending a starting signal to the 2500 gpm electric fire pump. If the electric fire pump fails to start, the standby diesel 2500 gpm fire pump provides water to the system.

A reliable supply of water to each subsystem is ensured by piping loops and building mains that are interconnected at two points. These provide flow to any subsystem with one leg of the fire piping loop out of service. A failure mode and effects analysis is presented in Table 9-1.

Hollow metal fire doors provided in fire walls are equipped with latch and closing mechanisms, except access doors which are equipped with latches. Access doors provide equipment access and are not used for personnel passage. Strict administrative procedures are used to assure that the doors are not left open. However, during maintenance or other operational events, the fire doors may be intentionally propped open. The breach of the fire barrier would be compensated for by appropriate measures delineated by the plant procedure. Additionally, certain fire doors are maintained open with automatic hold-open and release mechanisms. These mechanisms would activate in the event of a fire and close the associated door to establish the fire barrier.

Other than unrated openings, penetrations through rated barriers, including electrical penetration seals, are sealed to provide fire resistance equivalent to the barrier itself. Ventilation penetrations through barriers are protected by standard fire door dampers unless noted otherwise in other sections of the FHAR. Unrated openings are identified in other sections of the FHAR and the ability of the associated fire barrier was evaluated to withstand the hazards within the are and to protect Appendix R safe shutdown equipment within the area from a fire outside the area.

Failure of any portion of the fire protection system would not damage or prevent fire protection to a Class I structure system or component. Should a piping failure occur in the non-pressurized portion of the diesel fire pump discharge line, the check valve in the line will keep the main system pressurized. Although the break prevents the diesel fire pump from being used, it will not prevent the use of the electric fire pump for the system.

Failure of Class II pressurized piping downstream of the piping just discussed will cause the electric and diesel fire pumps to start. The system has a number of loops with isolation valves which allows the option of removing the affected portion from the system, while still maintaining adequate fire protection.

The remoteness of the fire water storage tank is such that any water spill resulting from a complete tank rupture will not adversely affect any safety-related system. In addition, yard drains are provided in the vicinity of the tank.

The loss of the fire water storage tank, however, eliminates the use of the electric fire pump. In this case, the diesel fire pump will ensure adequate station fire protection. The subject tank operates at atmospheric pressure and is designed in accordance with AWWA D 100.

For a further discussion of effects of flooding, refer to Section 3.6 of the USAR.

Carroll Township Water is available for use by local fire department pumper trucks and can supply the site fire distribution system by way of the Warehouse Fire Supply line.

An evaluation was performed to ensure that at least one train of redundant Appendix R safe shutdown equipment is free of damage from the effects of inadvertent or fire induced suppression actuation.

Normal ventilation ductwork is provided with UL listed fire dampers at penetrations through fire walls and floors unless noted otherwise in other sections of the FHAR. Dampers meet the intent of NFPA 90A. They are arranged to close automatically and remain closed upon the operation of a fusible link. The link temperature rating is normally 165°F; however, for rooms having a high normal ambient temperature, the link temperature rating is 212°F. For dampers that must remain open during a High Energy Line Break (HELB) event, higher temperature fusible links are used. There is no automatic override.

Figures 9-7 and 9-8 demonstrate the compatibility of the fire pump locations with minimum and maximum supply source levels and also show the required and available NPSH at minimum supply levels.

Figure 9-9 illustrates the foundation details of the vertical fire pump. Water leakage at the foundation to the pump room is prevented by the use of grouting and a gasket. The grouting is a nonshrinking type and is packed to eliminate voids. At the maximum postulated forebay flood level of 584 feet, these seals will prevent leakage.

Curbing in this room is provided around the day tank, fire pump, and diesel engine. A motor-driven vertical duplex sump pump of 100 gpm/pump capacity takes any drainage from within the curbed area to an oil interceptor outside of the room. Drainage from this room outside of the curbed area drains to the west tunnel room which also has a motor-driven duplex sump pump of 100 gpm/pump capacity.

9.1.3.1 Fire Protection Inside Containment

The major fire hazard within the containment is the Reactor Coolant Pump (RCP) lube oil system. To prevent a fire due to oil leakage, an engineered oil containment and collection system for each RCP has been provided. The system has been designed to contain the oil from leakage or a pipe failure, and drains to a collection tank which is periodically emptied to assure tank capacity for the oil contained in one motor at all times while the reactor is critical.

The redundant safety-related cable divisions enter the containment at penetrations approximately 90° from each other or 120 feet apart resulting in acceptable separation. In addition, safety-related cables are installed in rigid steel conduit or covered steel wireway. The fire detection system consists of heat and photoelectric detectors installed at various areas within the containment. The fire suppression system inside the containment relies on manual fire fighting operation. Portable fire extinguishers and hose stations are also provided just outside the containment.

9.1.3.2 Cable Spreading Room

The walls, floors and ceiling in the cable spreading room are designed to have a fire rating of three hours. Primary fire protection will be provided by an automatic sprinkler (fog nozzle) system. The backup fire suppression system is the hose station located immediately outside the cable spreading room. Smoke detectors are provided that will initiate audible and visual alarms in the control room. Area ionization detectors have been installed.

Class 1E power, control and instrumentation cable passed the flame test equivalent of the then current IEEE No. 383 Flame Test. Cable trays within the cable spreading room have solid metal bottoms with an air gap between the tray bottom and the cable and ceramic fiber blanket barrier tray cover. Power cables in this room are enclosed in conduits to minimize the possibility of a cable spreading room fire due to power cable overload.

9.1.3.3 Control Room

The Control Room is bounded by 3-hour rated fire walls, except where it adjoins the elevator and stairwell entrance. These walls are rated for 2 hours. Doors leading into the Control Room from the Turbine Building are rated for 3 hours. The door between the Control Room and Auxiliary Building is not fire rated but is constructed of a 5/8-inch thick steel plate and other noncombustible materials, except for the combustible gasket. A 3-hour rated door was added in series with this watertight door to assure the required 3-hour fire resistance. Cable and duct penetrations are sealed with fire resistant silicone foam. Air handling ducts through fire barriers are provided with automatic closing 3-hour rated fire dampers.

Total loss of the Control Room due to a fire is assumed and alternative shutdown capability has been provided in accordance with Appendix R as discussed in the FHAR. However, to minimize the risk of fire from adversely affecting safe shutdown in the Control Room, physical separation of redundant channels, barriers installed between cabinets, barriers installed between redundant essential channels within the cabinets and sealing to prevent the passage of fire and smoke between essential cabinets and between the Control Room and Cable Spreading Room are provided.

At least four portable Halon and four pressurized water-type extinguishers inside the Control Room complex and hose stations adjacent to the Control Room complex are provided. The application of water in the Control Room could cause equipment operation to become unreliable. If the reactor is in operation, hose stations would be used after initiation of safe shutdown from a remote location.

Smoke and fire detectors are located in the Control Room complex. The main control boards are also provided with ionization detectors. Smoke and temperature detectors are provided in the return air ducts from the Control Room. Self-contained breathing apparatus is available within the boundary of the Control Room complex for operator use.

9.1.4 Tests and Inspections

Each fire pump has been shop-tested for hydraulic performance at different head-capacity points including closed valve (shutoff), and design discharge. Tests were run in accordance with NFPA 20 and the Hydraulic Institute Standards.

The system was operated and tested initially with regard to flow path, flow capacity, transfer capability, and mechanical operability, and found to be satisfactory.

The fire suppression system is provided with test valves which are accessible for periodic testing. Regular testing by water flow is performed in accordance with plant procedures.

Administrative controls are provided through existing plant procedures to ensure that the Fire Protection Program and equipment is properly maintained.

This includes quality assurance audits of the program implementation, conduct of periodic test inspections, and remedial actions for systems and barriers out of service. This program emphasizes those elements of fire protection that are associated with Appendix R safe shutdown as described in other sections of the FHAR and their significance when evaluating program and equipment deficiencies.

Fire protection equipment and systems are subject to periodic inspections and tests will be conducted as defined by the fire protection program and plant procedures. These inspections and tests are consistent with the National Fire Protection Association Codes to the extent determined to be applicable.

The following fire protection features are subject to periodic tests and inspections:

a. Fire detection instrumentation

b. Fire suppression water systems

c. Spray and sprinkler systems

d. Fire hose stations

e. Hydrants and hydrant hose houses

f. Fire barriers (walls, floors, ceilings, electrical raceway enclosures, structural steel fire-proofing, fire doors, fire dampers and penetration seals)

Equipment out of service including fire suppression, detection, and barriers would be controlled through the administrative program and appropriate remedial actions taken. The program requires all impairments to fire protection system to be identified and appropriate notification given to the Fire Marshal for evaluation. Based on the condition, engineering analysis may be required to determine the extent of the fire hazard to safe plant operations. As conditions warrant, remedial actions would include compensatory measures to ensure equivalent level of fire protection in addition to timely effort to effect repairs and restore equipment to service.

9.1.5 Renewed Facility Operating License

This section provides a summary description of the fire protection programs and activities for managing the effects of aging and the evaluation of time-limited aging analyses in accordance with 10 CFR 54.21(d). (Reference 2.5.W)

The Fire Protection Program is a combination condition and performance monitoring program, comprised of tests and inspections that follow the applicable National Fire Protection Association (NFPA) recommendations. The Fire Protection Program manages, through visual inspections and functional tests, as appropriate, the aging effects on fire barrier penetration seals, fire wraps, fire-rated doors and fire barrier walls, ceilings and floors that perform a current licensing basis fire barrier intended function.

The Fire Protection Program also supplements the Fuel Oil Chemistry Program for managing the aging effects on the diesel fire pump fuel oil supply line. (USAR 18.1.17)

The Fire Water Program (a sub-program of the overall Fire Protection Program) is an existing program that applies to the fire water supply and water-based suppression systems, which include sprinklers, nozzles, fittings, valve bodies, fire pump casings, hydrants, hose stations, standpipes, a water storage tank, and aboveground, buried and underground piping and components. This program is a condition monitoring program.

The Fire Water Program manages loss of material due to corrosion, including MIC, fouling, and flow blockage because of fouling. This program manages the aging effects through the use of flow testing and visual inspections performed in accordance with the 2011 Edition of NFPA 25. Testing or replacement of sprinklers that have been in place for 50 years is performed in accordance with the 2011 Edition of NFPA 25. In addition to NFPA codes and standards, portions of the water-based fire protection system that are: (a) normally dry but periodically subjected to flow (e.g., dry-pipe or preaction sprinkler system components) and (b) cannot be drained or allow water to collect are to be subjected to augmented testing beyond that specified in NFPA 25, including: (a) periodic full flow tests at the design pressure and flow rate or internal visual inspections and (b) volumetric wall-thickness examinations. Flow testing and visual inspections are performed at intervals specified in the 2011 Edition of NFPA 25. The water-based fire protection system is normally maintained at required operating pressure and is monitored such that loss of system pressure is immediately detected and corrective actions initiated. (USAR 18.1.18)

Table 9-1

Failure Mode and Effects Analysis -Fire Protection System Major Equipment

	Component	Failure	Comments and Consequences
a.	Fire water storage tank	Rupture of tank or above-ground outlet piping	See Subsection 9.1.3.
b.	Electric fire pump and/or jockey fire pump	Failure of suction piping in water treatment building	With falling level indication at fire water storage tank and electric fire pump not running, operator will then shut outlet valve of storage tank. Diesel fire pump is still available for fire protection. Flooding will be minimized because of availability of sump pumps.
c.	Electric fire pump	Inadvertently starts	Excess flow will pass through associated relief valve to prevent the pump from overheating until shutdown.
d.	Electric fire pump	Fails to run	Diesel fire pump is available for pump start protection.
e.	Jockey fire pump	Fails to run	Electric fire pump will run, thus providing system pressurization. Its relief valve will maintain pump minimum flow. Diesel fire pump will serve as backup.
f.	Electric fire pump, or jockey fire pump or diesel fire pump	Discharge piping	See Subsection 9.1.3.
g.	Main yard buried piping	Collapse of piping at junction with branch feeder	The break in the loop would be isolated via the sectionalizing valves such that fire water suppression would be available to the remainder of the loop. Fire water suppression would be lost to the affected branch feeder. Backup suppression and fire fighting activities would be employed in those plant areas protected by the affected branch feeder in the event of a fire.
h.	Turbine Building loop	Rupture upstream of isolation valve that feeds alarm check valve to auxiliary boiler room	The main loop is isolated such that no fire water suppression is available to the deluge valves which feed the seal oil room, auxiliary transformer 11, main transformer 1, startup transformer 01, bus tie BD1, and bus tie AC1. Backup suppression and fire fighting activities would be employed in the event of a fire.

Table 9-1

Failure Mode and Effects Analysis -Fire Protection System Major Equipment

	Component	Failure	Comments and Consequences
i.	Fire water storage tank heating system	Supply or return line from fire water storage tank rupture in water treatment	Operator will shut the respective isolation valves at the storage tank. There will be adequate time to repair lines. Sump pumps will prevent any flooding.

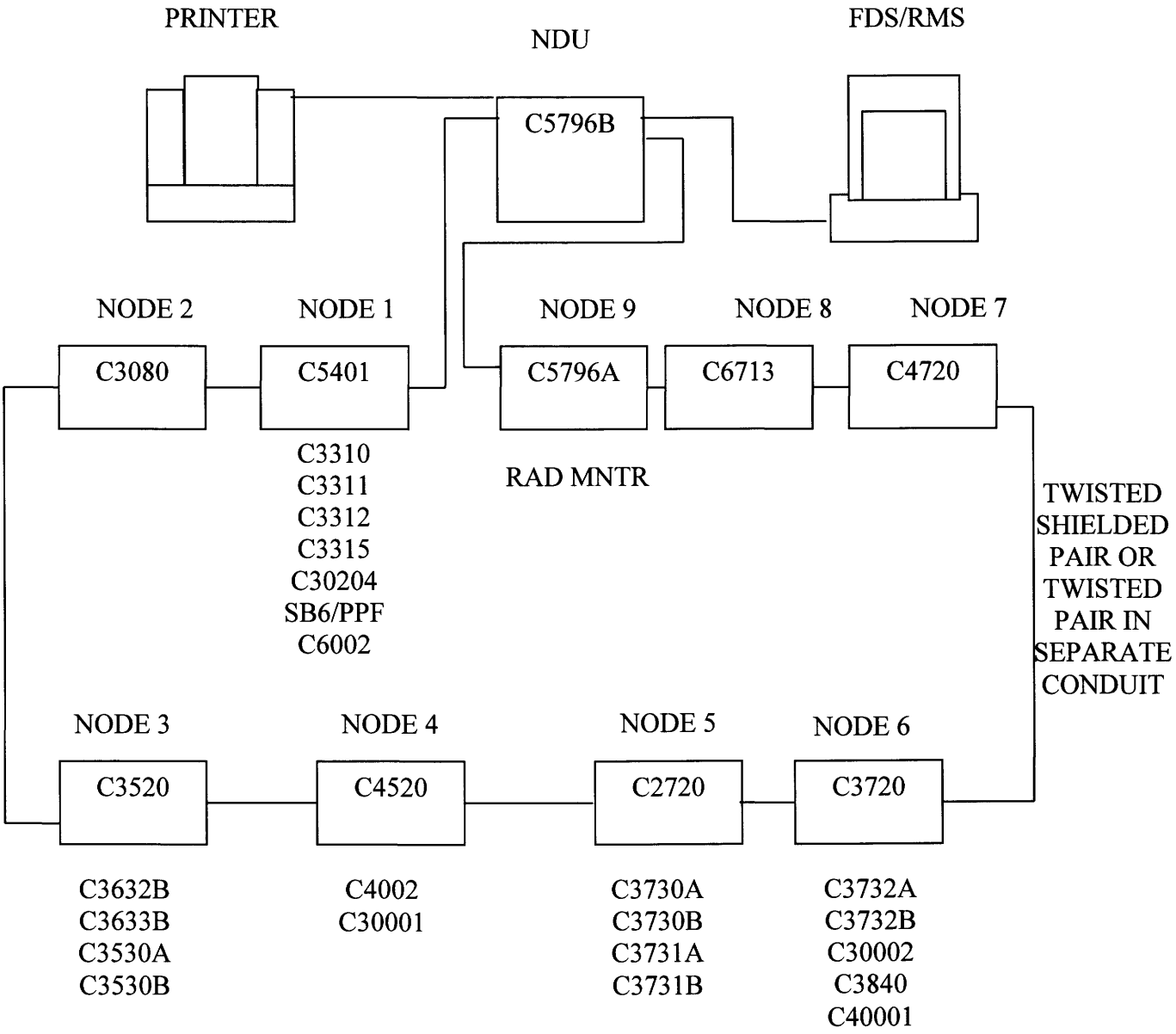

NOTE: HVAC PANELS NOT SHOWN

DAVIS-BESSE NUCLEAR POWER STATION
CENTRAL FIRE ALARM SYSTEM SIMPLIFIED NETWORK DIAGRAM
FIGURE 9-1

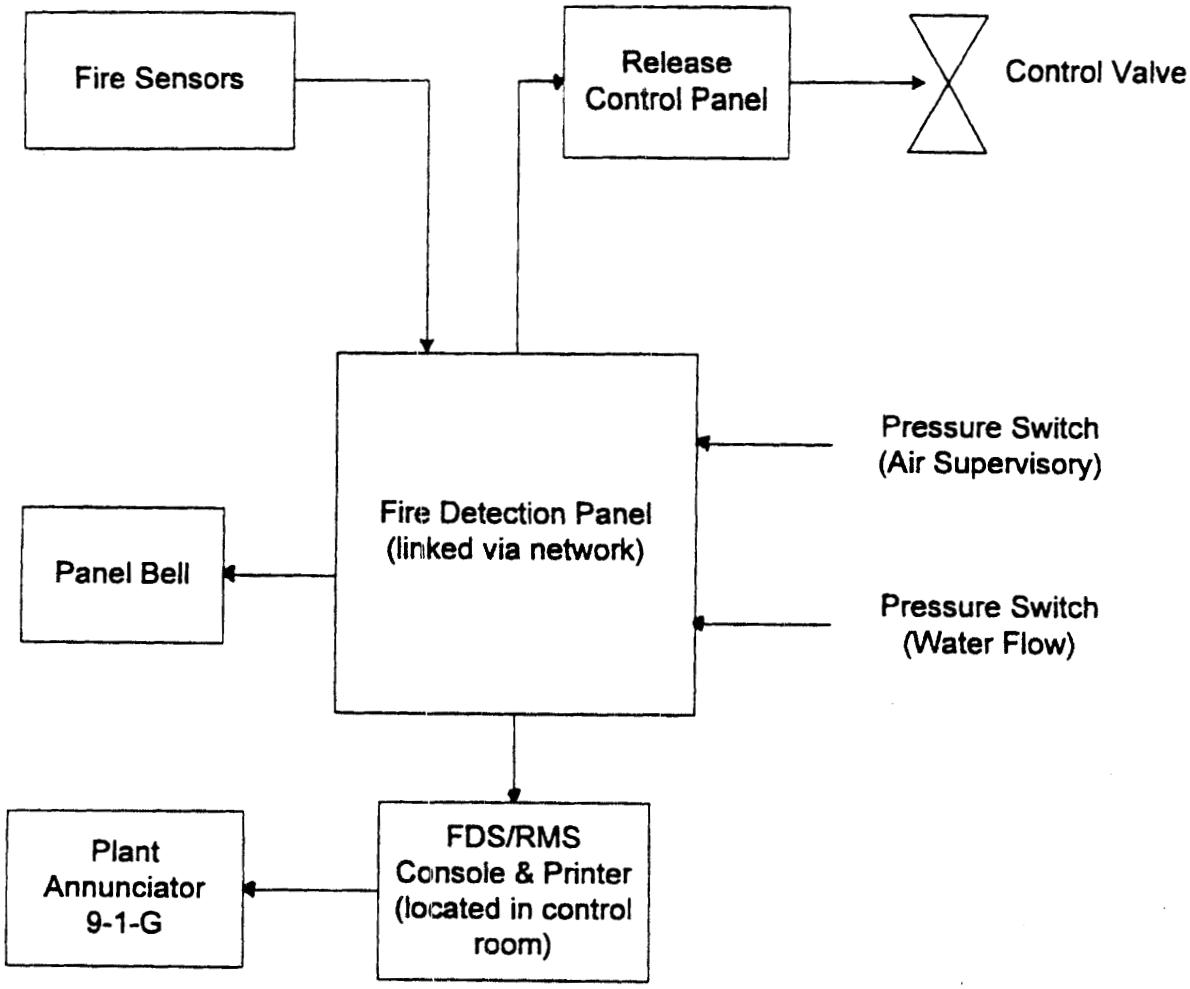

DAVIS-BESSE NUCLEAR POWER STATION
SIMPLIFIED DETECTION SYSTEM
FIGURE 9-2

(This page intentionally left blank)

DAVIS-BESSE NUCLEAR POWER STATION
TYPICAL FIRE DETECTION ZONE
HIGH RADIATION AREAS
FIGURE 9-3

(This page intentionally left blank)

DAVIS-BESSE NUCLEAR POWER STATION
WET PIPE SPRINKLER SYSTEM
FIGURE 9-4

(This page intentionally left blank)

DAVIS-BESSE NUCLEAR POWER STATION
PRE-ACTION SPRINKLER SYSTEM
FIGURE 9-5

(This page intentionally left blank)

DAVIS-BESSE NUCLEAR POWER STATION
DELUGE TYPE SPINKLER SYSTEM
FIGURE 9-6

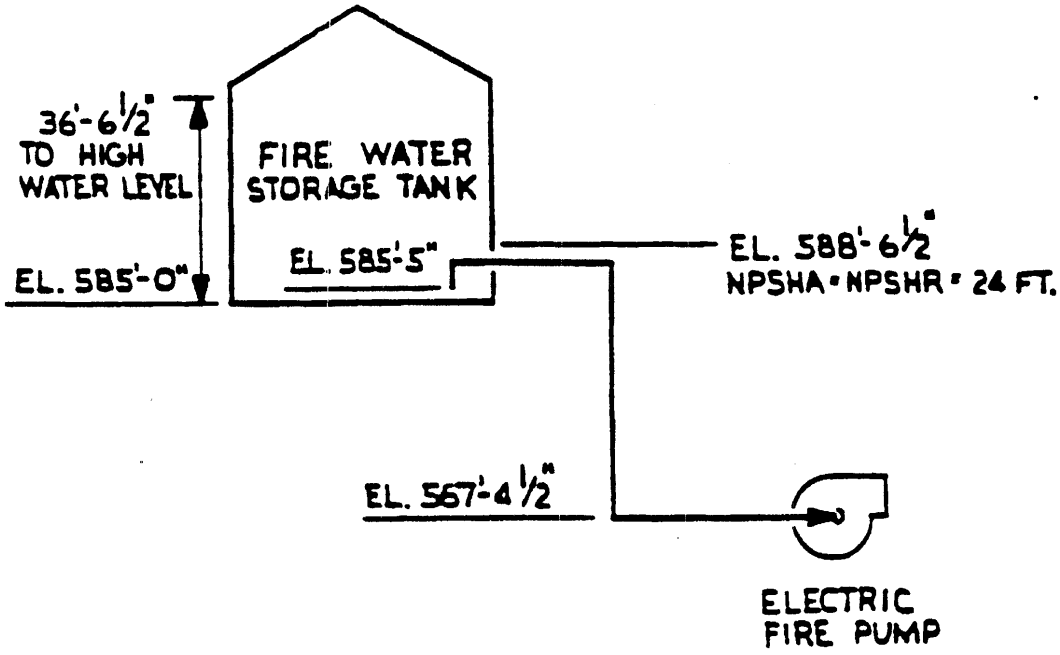

DAVIS-BESSE NUCLEAR POWER STATION
ELECTRIC FIRE PUMP
FIGURE 9-7

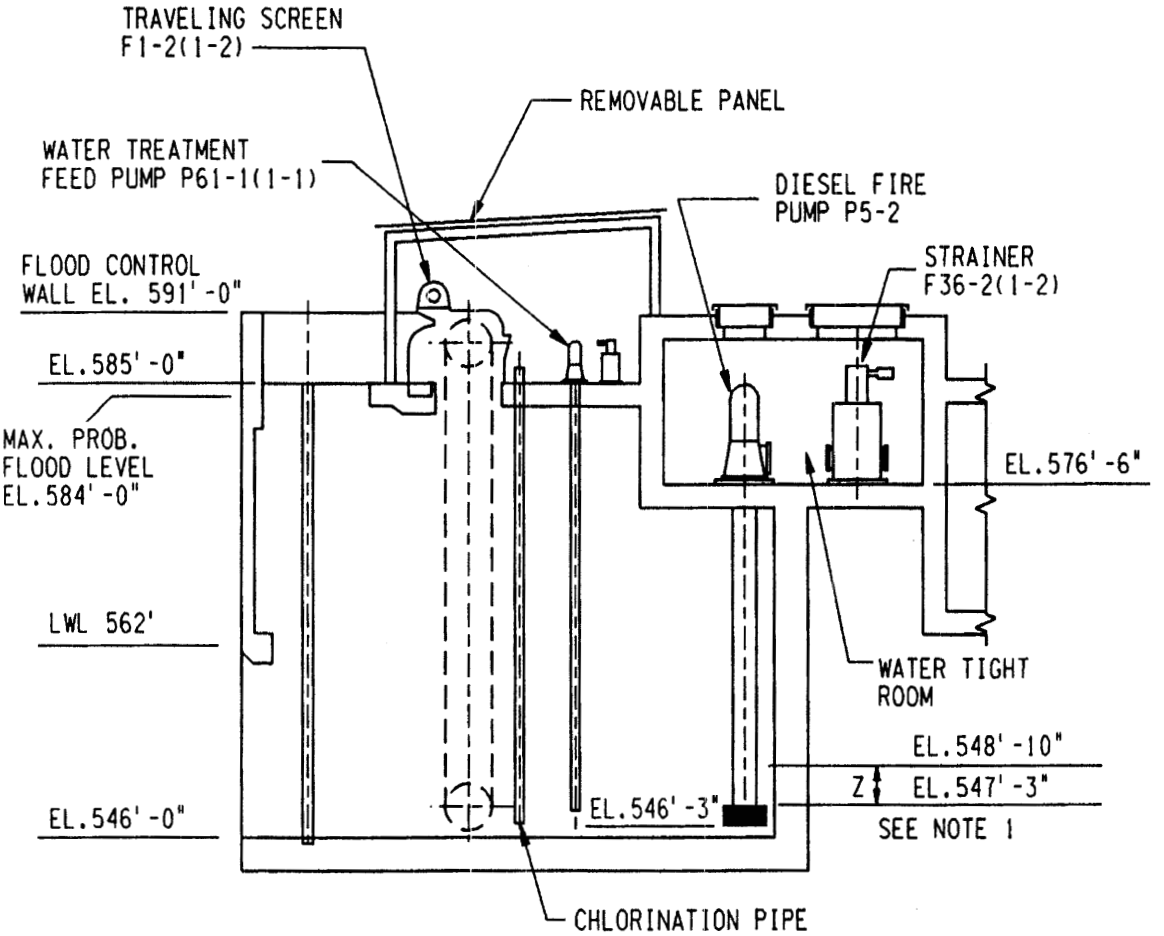

NOTE:

SUBMERGENCE DIMENSION "Z" IS MINIMUM FOR PROPER PRIMING AND/OR OPERATION AT 150% DESIGN CAPACITY, AT SEA LEVEL. (ABOVE PER NFPA PAM. 20) Z=19 INCHES

DAVIS-BESSE NUCLEAR POWER STATION
DIESEL FIRE PUMP
FIGURE 9-8

REVISION 19
NOVEMBER 2002

DB 11-18-02 DFN: G/USAR/UFIG98.DGN

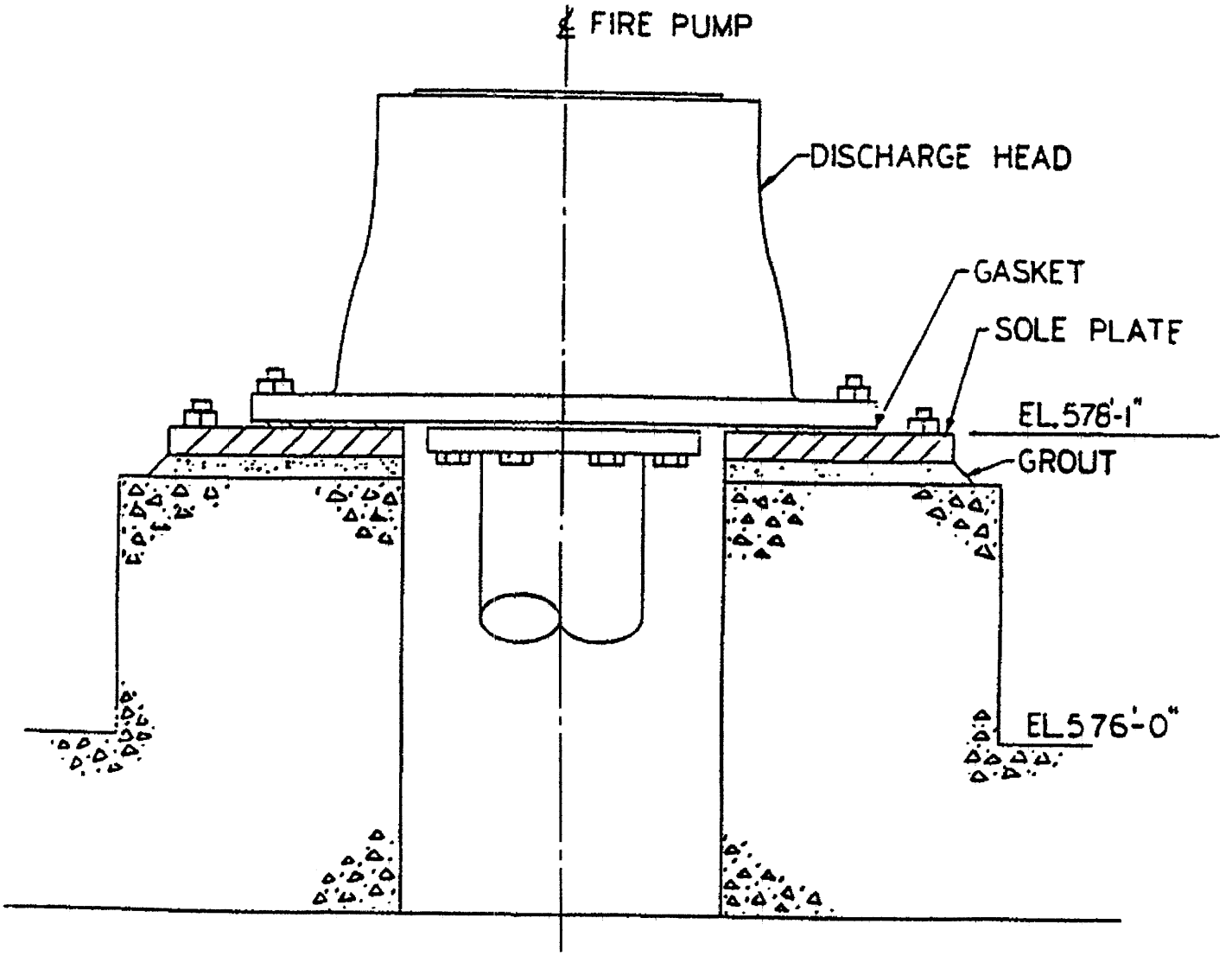

DAVIS-BESSE NUCLEAR POWER STATION
FOUNDATION DETAILS OF VERTICAL
FIRE PUMP
FIGURE 9-9

REVISION 21
JUNE 2006

DB 06-01-06 DFN G:/USAR/FHARFIG99.DGN/TIF