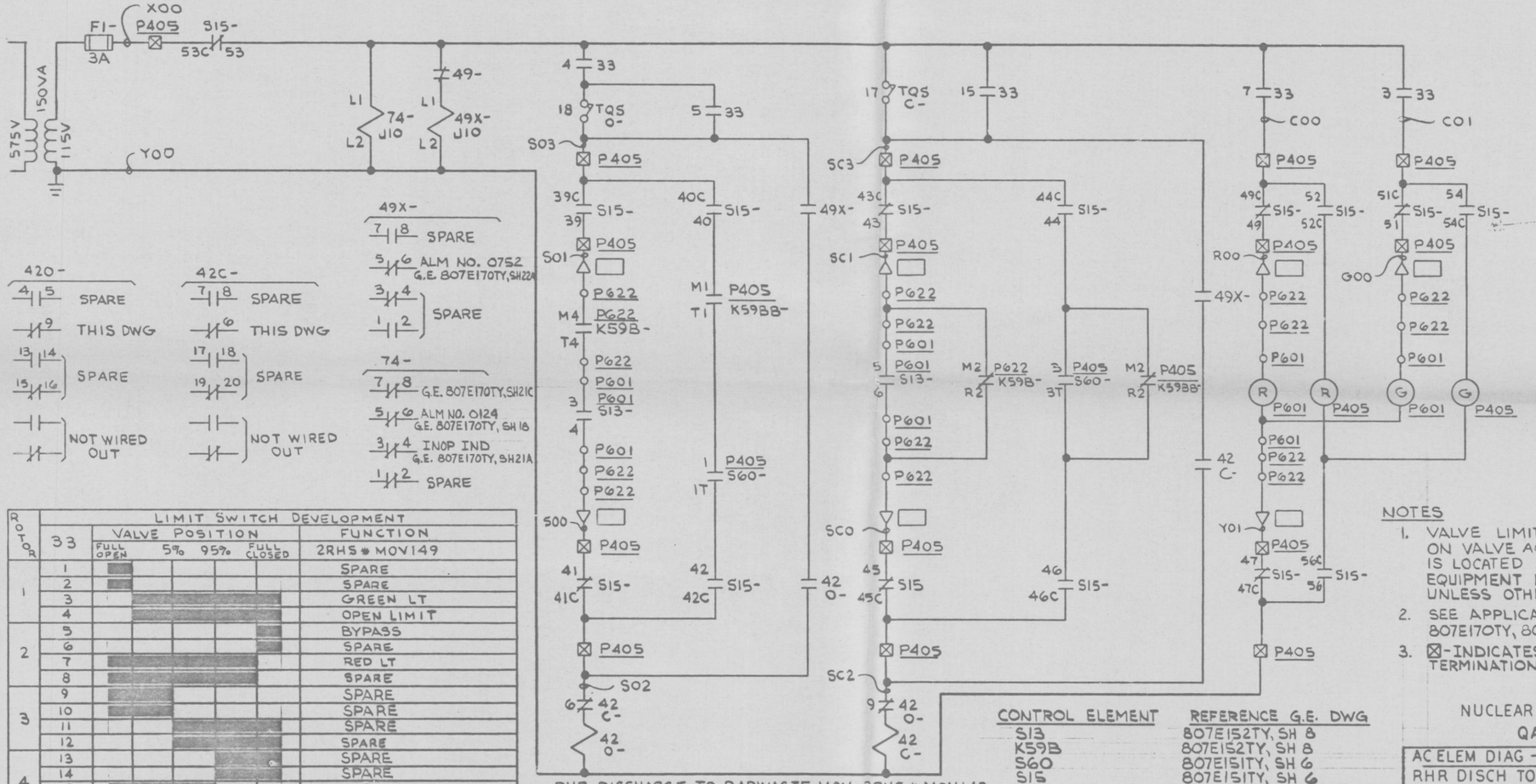

420-	42C-	49X-
4 5 SPARE	7 8 SPARE	7 8 SPARE
9 THIS DWG	6 THIS DWG	5 6 ALM NO. 0752 G.E. 807E170TY, SH22A
13 14 15 16 SPARE	17 18 19 20 SPARE	3 4 1 2 SPARE
NOT WIRED OUT	NOT WIRED OUT	74-
		7 8 G.E. 807E170TY, SH21C
		5 6 ALM NO. 0124 G.E. 807E170TY, SH 18
		3 4 INOP IND G.E. 807E170TY, SH21A
		1 2 SPARE

ROTOR	33	LIMIT SWITCH DEVELOPMENT — VALVE POSITION (FULL OPEN, 5%, 95%, FULL CLOSED)	FUNCTION 2RHS * MOV149
1	1		SPARE
	2		SPARE
	3		GREEN LT
	4		OPEN LIMIT
2	5		BYPASS
	6		SPARE
	7		RED LT
	8		SPARE
3	9		SPARE
	10		SPARE
	11		SPARE
	12		SPARE
4	13		SPARE
	14		SPARE
	15		BYPASS
	16		SPARE
TORQUE SW	17	CLOSING TORQUE SW INTERRUPTS CLOSING CYCLE IF MECHANICAL OVERLOAD OCCURS DURING CLOSING CYCLE	
	18	OPENING TORQUE SW INTERRUPTS OPENING CYCLE IF MECHANICAL OVERLOAD OCCURS DURING OPENING CYCLE	

RHR DISCHARGE TO RADWASTE MOV 2RHS * MOV149
(G.E NO. E12-F049) MCC 2EHS * MCC303D
CKT NO. 2RHSB26 (YELLOW)

CONTROL ELEMENT	REFERENCE G.E. DWG
S13	807E152TY, SH 8
K59B	807E152TY, SH 8
S60	807E151TY, SH 6
S15	807E151TY, SH 6
K59BB	807E151TY, SH 6

PRC APERTURE CARD

NOTES

1. VALVE LIMIT SWITCHES LOCATED ON VALVE ACTUATOR. TRANSFER SW-S7- IS LOCATED AT P405. ALL OTHER EQUIPMENT LOCATED AT MCC UNLESS OTHERWISE NOTED.
2. SEE APPLICABLE G.E. ELEMENTARY 807E170TY, 807E151TY, 807E152TY
3. ⊠-INDICATES PNL P405 TERMINATION

NUCLEAR SAFETY RELATED
QA CAT I

AC ELEM DIAG -600V MCC CKT
RHR DISCH TO RADWASTE MOV
NINE MILE POINT NUCLEAR STATION-UNIT 2
NIAGARA MOHAWK POWER CORPORATION
STONE & WEBSTER ENGINEERING CORPORATION

DESIGN CONTROL ISSUE
M 7/1/81

12177-ESK- 6RHS40

APM/JRM

GE-LSTG
GE-NED

D