DOCKET NO. 50-220

File Copy (original only)

File Copy

NINE MILE POINT NUCLEAR STATION ENGINEERING AND CONSTRUCTION STATUS

JUNE 1 1964

NIAGARA MOHAWK

3333

CONSTRUCTION AND START-UP SCHEDULE

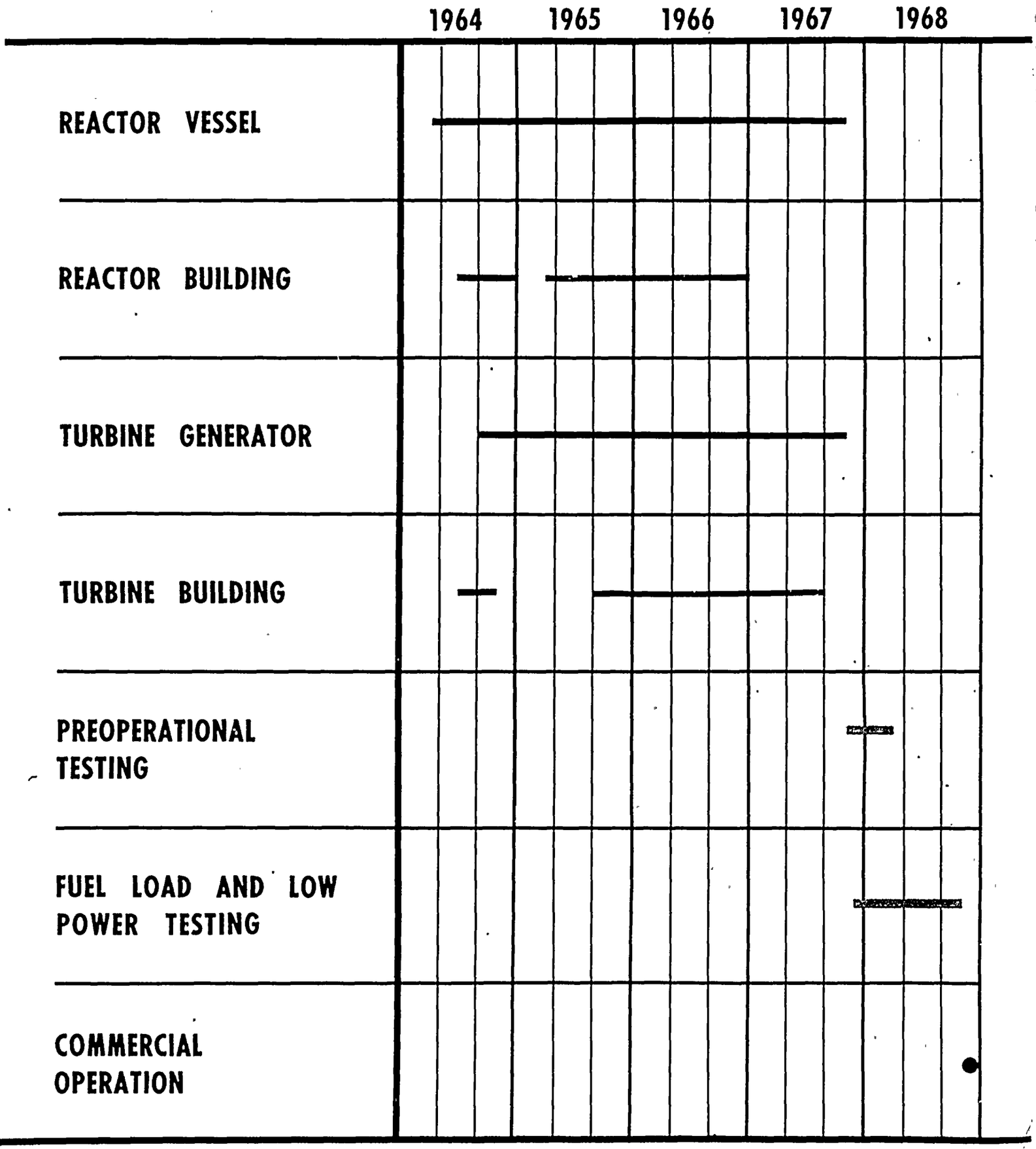

EXCAVATION
INSTALLATION
CONSTRUCTION
FABRICATION
TESTING

ORGANIZATION CHART

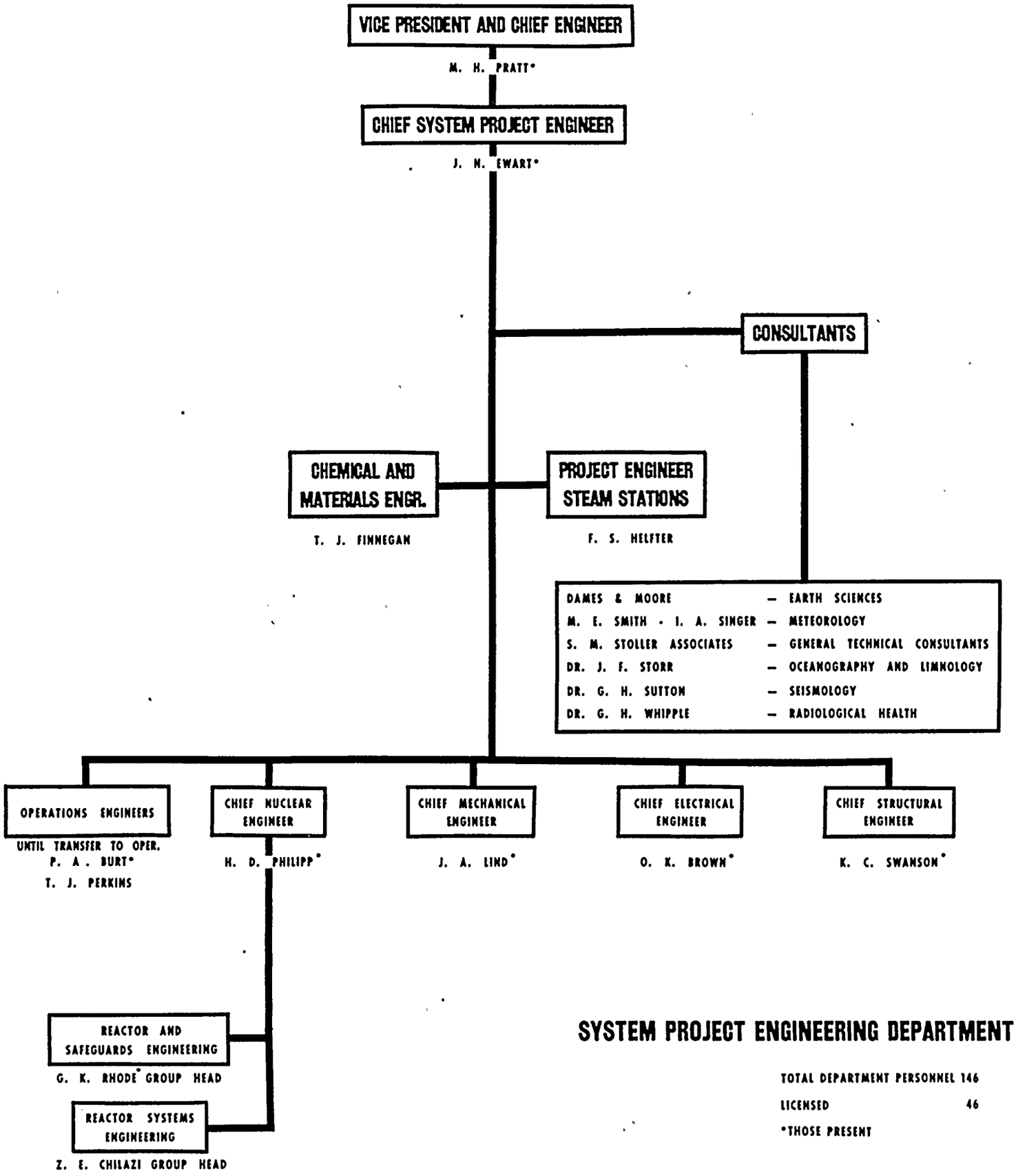

SYSTEM PROJECT ENGINEERING DEPARTMENT

TOTAL DEPARTMENT PERSONNEL 146

LICENSED 46

*THOSE PRESENT

ORGANIZATION CHART - OPERATIONS

VICE PRESIDENT OPERATIONS

F. J. SCHNEIDER

GENERAL SUPERINTENDENT OPERATIONS CENTRAL DIVISION

J. BARTLETT

OPERATIONS ENGINEERS

P. A. BURT - TO BE PLANT SUPT.

T. J. PERKINS - TO BE ASS'T PLANT SUPT.

STATUS OF ENGINEERING

NUCLEAR STEAM SUPPLY SYSTEM

CONTRACT WITH GENERAL ELECTRIC TO DESIGN AND FURNISH CERTAIN EQUIPMENT AND SYSTEMS SIGNED MARCH 31, 1964.

TURBINE GENERATOR	ORDER PLACED WITH GE MARCH 31, 1964.
ELECTRICAL EQUIPMENT	ORDER PLACED WITH GE MARCH 31, 1964
CONDENSER	NMP SPECIFICATIONS OUT TO VENDORS BIDS DUE EARLY JUNE 1964
FEEDWATER HEATERS	BIDS RECEIVED MAY 1964.
CONDENSATE AND FW BOOSTER PUMPS	NMP SPECIFICATIONS ISSUED APRIL 1964 BIDS DUE JUNE 1964
PRESSURE SUPPRESSION SYSTEM	PROPOSALS RECEIVED FROM C B & I MAY 1964
BOILER FEED PUMPS	PROPOSAL RECEIVED MAY 1964.
CONTAINMENT VENTILATION UNITS	PROPOSALS RECEIVED APRIL 1964
PLANT SEWERAGE SYSTEM	NMP SPECIFICATIONS ISSUED MAY 1964.

CURRENT ENGINEERING EMPHASIS

CONTINUATION OF SAFETY STUDIES RELATED TO STATION DESIGN AND LAYOUT

COMPLETION OF DETAILED FUNCTIONAL SPECIFICATIONS

COMPLETION OF PURCHASE SPECIFICATIONS AND PROCUREMENT ACTIVITIES FOR MAJOR EQUIPMENT ITEMS

FINALIZE DESIGN AREAS PERTINENT TO EXCAVATIONS AND GRADING ETC.

INFORMATION CENTER DESIGN

OTHER TYPICAL DESIGN PROGRESS

CONDENSER	MODIFIED FROM 3 SHELL TO A SINGLE SHELL UNIT WITH 3 COMPARTMENTS
EMERGENCY COOLING SYSTEMS	FOUR TANKS NOW UNDER CONSIDERATION INSTEAD OF TWO (unwieldy for maintenance -i. e. tube pulling) .
FEEDWATER SYSTEM	FEEDWATER BOOSTER PUMPS ADDED (to limit the shutoff pressure on the demineralizers) .
CONCRETE BIOLOGICAL SHIELD	MOVED INSIDE THE DRYWELL (eliminates need for water cooling system, simplified shielding arrangement).
VENTILATION	• DRYWELL : two air changes per hour purge capacity 150f maximum temperature upon loss of one cooler. normal max. temp. 135f. • REACTOR BUILDING : two duplicate full capacity normal ventilation systems. one air change per hour (one standby). two duplicate full capacity emergency ventilation systems. one air change per day and ¼" H_2O building vacuum (one standby).
FUEL POOL	TWO DUPLICATE FULL CAPACITY FILTERING AND COOLING SYSTEMS. (to accomodate maintenance outages and full core capacity conditions.)

STATUS OF CONSTRUCTION

MANAGERS OF CONSTRUCTION

CONTRACT WITH STONE & WEBSTER TO MANAGE CONSTRUCTION OF THE UNIT SIGNED AUG 13, 1963. ESTABLISHED OFFICE AT SITE MAY 1964.

ROCK EXCAVATION

NMP SPECIFICATIONS OUT TO VENDORS. BIDS DUE JUNE 10, 1964.

RAILROAD SIDING

NEGOTIATIONS WITH NEW YORK CENTRAL COMPLETE.

WATER SUPPLY

NEGOTIATIONS IN PROGRESS WITH CITY OF OSWEGO FOR EXTENSION OF WATER SUPPLY TO SITE

CONSTRUCTION ELECTRICAL SUPPLY

EQUIPMENT ORDERED FOR 115 KV SWITCHYARD AND FOR CONSTRUCTION SUBSTATION. INSTALLATION DEC., 1964

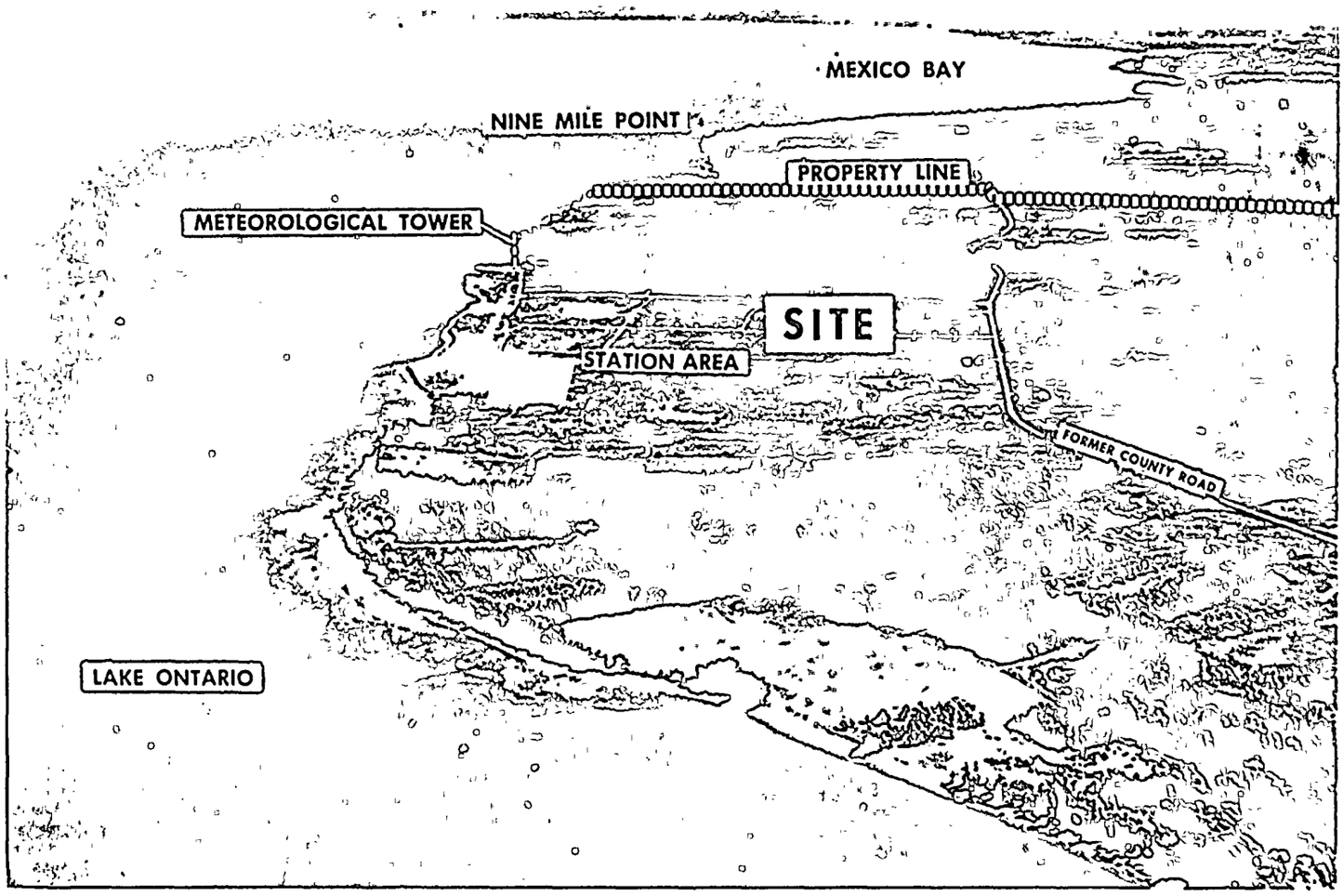

NINE MILE POINT NUCLEAR STATION SITE

STATION PLOT PLAN

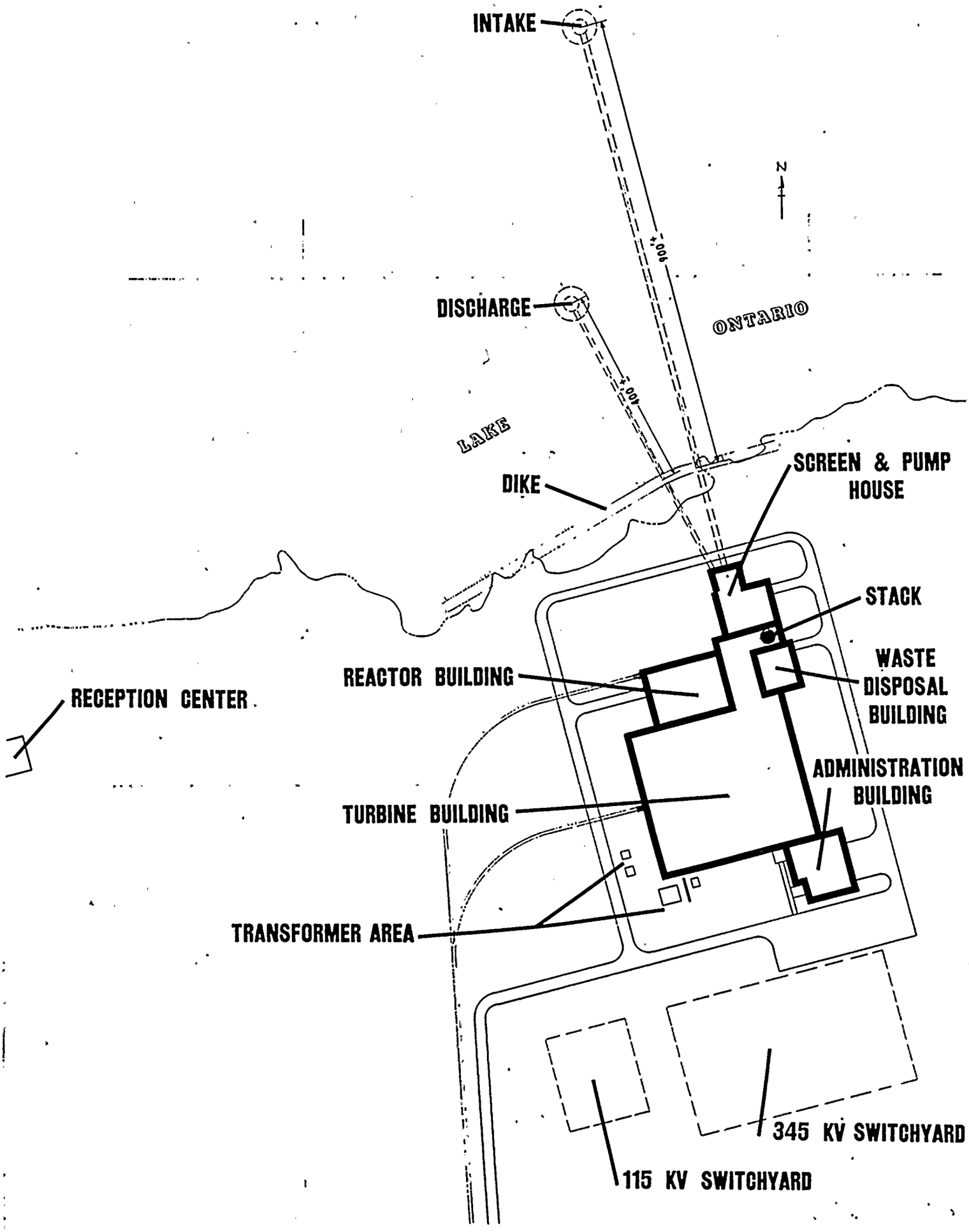

REACTOR CONTAINMENT AND SHIELD

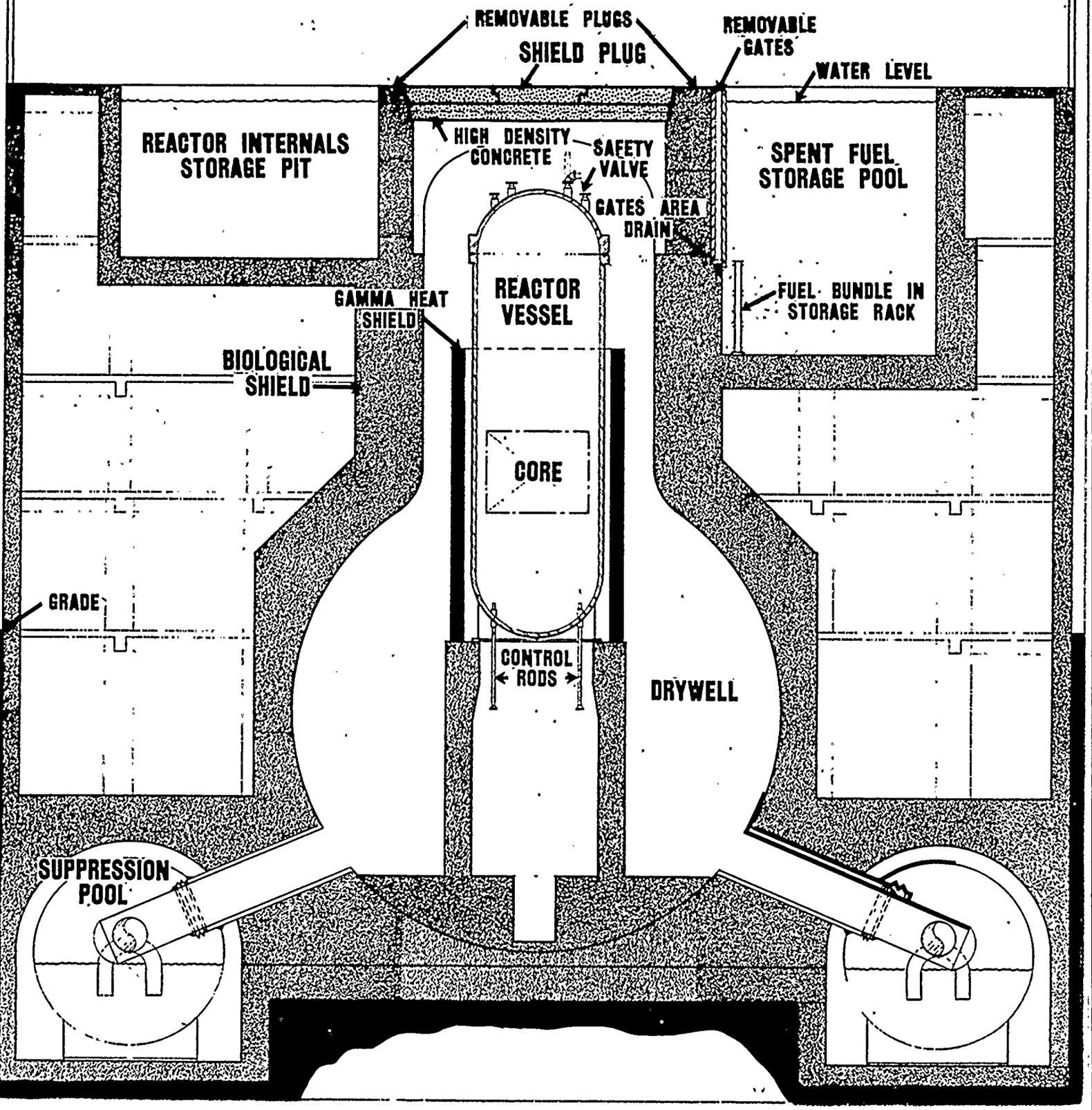

ELECTRICAL SINGLE LINE DIAGRAM

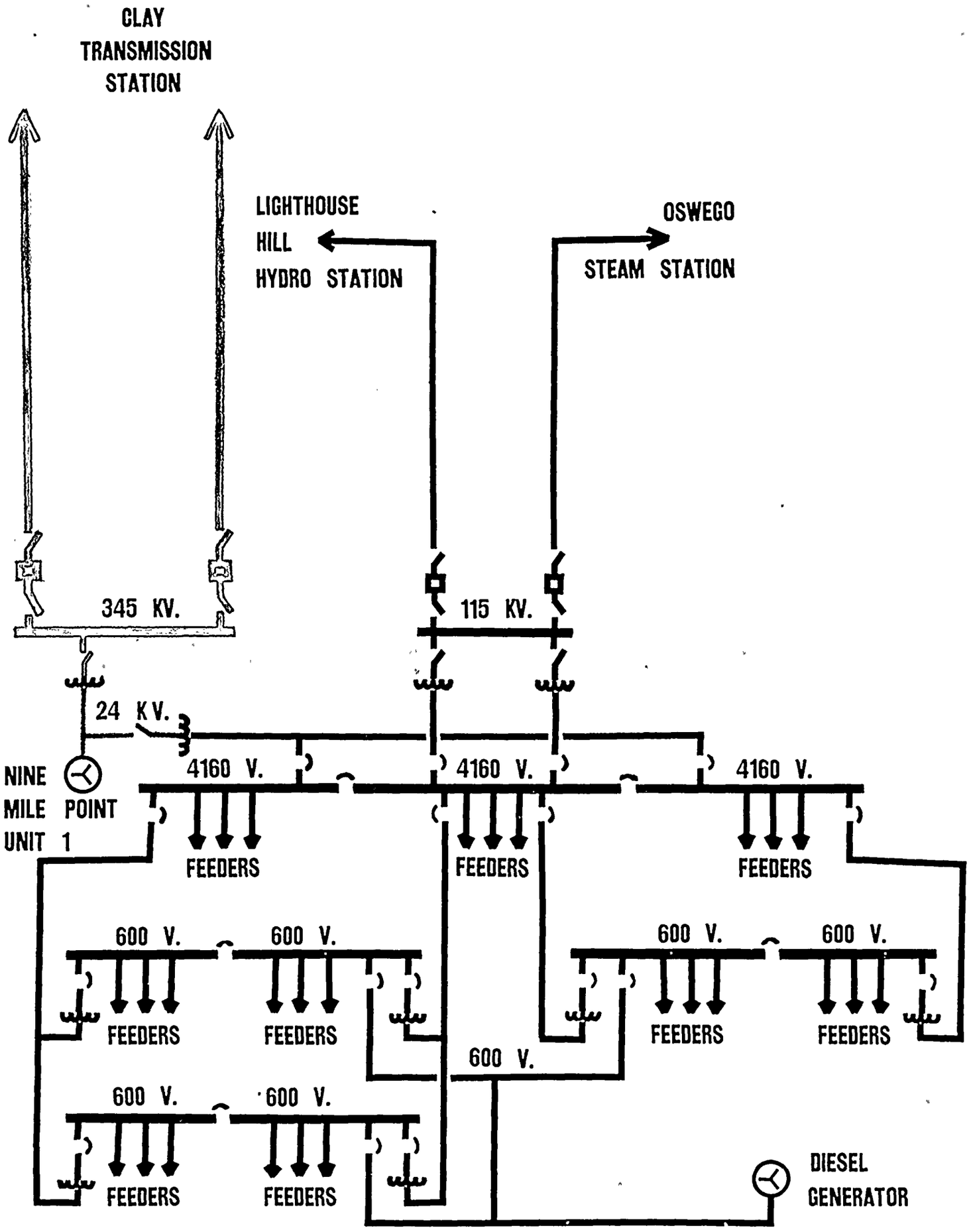

SITE SURVEY WORK

METEOROLOGY

ALL FUNDAMENTAL FIELD WORK COMPLETED, 14 MONTH ANALYSIS REPORTED IN PHSR

CONTINUING TOWER DATA COLLECTION TO IMPROVE DISTRIBUTION STATISTICS

ATTEMPTING TO CORRELATE SITE DATA WITH OSWEGO WEATHER BUREAU TO PREDICT LONG - TERM YEARLY VARIATIONS

CURRENTLY CHECKING INLAND DISTANCE OF LAKE BREEZE PENETRATION WITH SATELLITE AEROVANE

LIMNOLOGY

COMPREHENSIVE FIELD WORK COMPLETED,
RESULTS REPORTED IN PHSR

SUPPLEMENTAL LAKE SURVEY PROGRAM UNDERWAY WITH UP TO 40 CRUISES EXPECTED DURING 1964

CRUISE SPECIFICATIONS INCLUDE:

- WATER CHEMISTRY DETAILS NEAR INTAKE
- SUPPLEMENT PREVIOUS DATA ON CLOSE - IN CURRENTS AND DILUTION FACTORS
- INVESTIGATE VARIOUS LOCALIZED EFFECTS (i. e. intake drawdown, etc.)

START EXPLORATORY BIOLOGICAL SURVEY (non - radiological)
TO ESTABLISH PROCEDURES AND BEGIN
YEARLY RECORD OF MARINE ORGANISMS

SEISMOLOGY

FIELD WORK COMPLETE, RESULTS REPORTED IN PHSR

ENGINEERING APPLICATION OF DESIGN EARTHQUAKE MOTION CONTINUING

- CLASSIFICATION OF EQUIPMENT AND STRUCTURES
- DEVELOPMENT OF THE RESPONSE SPECTRUM

GEOLOGY

FIELD WORK COMPLETE FOR SAFEGUARDS ANALYSIS, RESULTS REPORTED IN PHSR

ADDITIONAL WORK FOR CONSTRUCTION PURPOSES INCLUDES

- UNDERWATER BORINGS FOR INTAKE AND DISCHARGE TUNNELS
- BORINGS FOR INFORMATION CENTER FOUNDATION
- GEOLOGICAL ANALYSIS OF EXCAVATION

HYDROLOGY

FIELD WORK COMPLETE, RESULTS REPORTED IN PHSR