AEC DI[redacted]IBUTION FOR PART 50 DOCKET MA[redacted]IAL
(TEMPORARY FORM)

CONTROL NO: 2549

FILE

FROM:	DATE OF DOC:	DATE REC'D	LTR	MEMO	RPT	OTHER
LeBoeuf,Lamb,Leiby & MacRae Washington, D. C. 20036	4-17-73	4-17-73	x			

TO:	ORIG	CC	OTHER	
John F. O'Leary	1 signed			SENT AEC PDR X(Less Prop SENT LOCAL PDR X(Less Prop

CLASS:	INPUT	NO CYS REC'D	DOCKET NO:
U/PROP INFO		1	50-410

DESCRIPTION:
Ltr submitted on behalf of Niagara Mohawk... Requesting withholding from public disclosure of Prop portion of Suppl # 10 relating to the details of the location & concentration of gadolinia anticipated for initial core pursuant to 2.790.....trans the following:
*DENOTES: Distribution with Prop Info.

PLANT NAMES: Nine Mile Point Unit # 2

ENCLOSURES:
AMDT # 11 notarized 4-11-73 consisting of....
SUPPL # 10 containing.....Rev. 4-23-73
(1) PROP INFO: Response to Section 3.8 -Details of the gadolinia core design.(2 cys rec'd)
(2) Figure 5 - Core Configuration
(3) Responses to our 3-6-73 ltr w/revisions
(4) Revisions to Sections 1,2,4,6,8,10,12 & App "C".
CERT OF SV dtd 4-17-73 showing sv of Amdt # 11 upon R. P. Jones et. al

FOR ACTION/INFORMATION 4-18-73 fod

BUTLER(L)	SCHWENCER(L)	ZIEMANN(L)	YOUNGBLOOD(E)
W/ Copies	W/ Copies	W/ Copies	W/ Copies
*CLARK(L) Cy # 2	STOLZ(L)	ROUSE(FM)	REGAN(E)
W/ 2 Copies	W/ Copies	W/ Copies	W/ Copies
GOLLER(L)	VASSALLO(L)	DICKER(E)	
W/ Copies	W/ Copies	W/ Copies	W/ Copies
KNIEL(L)	SCHEMEL(L)	KNIGHTON(E)	
W/ Copies	W/ Copies	W/ Copies	W/ Copies

ACKNOWLEDGED

DO NOT REMOVE

INTERNAL DISTRIBUTION

*REG FILE Cy # 1	TECH REVIEW	DENTON (LTR)	F & M	WADE	E
AEC PDR	HENDRIE	GRIMES	SMILEY	BROWN	E
OGC, ROOM P-506A	SCHROEDER	GAMMILL	NUSSBAUMER	G. WILLIAMS	E
MUNTZING/STAFF	MACCARY (LTR)	KASTNER		SHEPPARD	E
CASE (LTR)	KNIGHT	BALLARD	LIC ASST.		
GIAMBUSSO (LTR)	PAWLICKI	SPANGLER	SERVICE L	A/T IND	
BOYD	SHAO		WILSON L	BRAITMAN	
V. MOORE-L(BWR) (LTR)	STELLO (LTR)	ENVIRO	GOULBOURNE L	SALTZMAN	
DEYOUNG-L(PWR)	HOUSTON	MULLER	SMITH L		
SKOVHOLT-L	NOVAK	DICKER	GEARIN L	PLANS	
P. COLLINS	ROSS	KNIGHTON	DIGGS L	MCDONALD (LTR)	
	IPPOLITO	YOUNGBLOOD	TEETS L	DUBE	
REG OPR	TEDESCO (LTR)	REGAN (LTR)	LEE L		
FILE & REGION(2)	LONG	PROJ LEADER	MAIGRET L	INFO	
MORRIS	LAINAS	NORRIS	SHAFER F & M	C. MILES.	
STEELE	BENAROYA	HARLESS			
	VOLLMER				

EXTERNAL DISTRIBUTION

LD

1-LOCAL PDR Oswego, N. Y.
1-DTIE(ABERNATHY)
1-NSIC(BUCHANAN)
1-ASLB-YORE/[redacted]/H ST.
16-CYS ACRS HOLDING

(K)(2)(S)-NATIONAL LAB'S ANL
1-R. CARROLL-1C, GT-B227
1- R. CATLIN,E-256-GT
1- CONSULTANT'S NEWMARK/BLUME/AGABIAN
1- GERLAD ULRIKSON....ORNL

1-PDR-SAN/LA/NY
1- GERALD LELLOUCHE
BROOKHAVEN NAT. LAB
1-AGMED(WALTER KOESTER, RM C-427, GT)
1- RD...MULLER...F-309GT

LAW OFFICES OF
LEBOEUF, LAMB, LEIBY & MACRAE
1821 JEFFERSON PLACE, N.W.
WASHINGTON, D.C. 20036

ARVIN E. UPTON
EUGENE B. THOMAS, JR.
LEONARD M. TROSTEN
HARRY H. VOIGT
LEX K. LARSON
WASHINGTON PARTNERS

ONE CHASE MANHATTAN PLAZA
NEW YORK, N.Y. 10005

WASHINGTON TELEPHONE
202 FEDERAL 8-0111

CABLE ADDRESS
LALALU, WASHINGTON D.C.

Regulatory File Cy.

April 17, 1973

Mr. John F. O'Leary
Director of Licensing
U. S. Atomic Energy Commission
Washington, D. C. 20545

Re: Niagara Mohawk Power Corporation
Nine Mile Point Unit 2
AEC Docket No. 50-410

Dear Mr. O'Leary:

With this letter we submit three (3) originals and twenty-five (25) copies of Amendment No. 11 to the Application for Licenses in the above-captioned proceeding. This Amendment transmits, in two parts, Supplement No. 10 to the Preliminary Safety Analysis Report. The first part consists of 70 copies of non-proprietary responses to all of the Staff's requests and certain additional information. Also included are 70 copies of the non-proprietary diagram labeled figure 5, to be added to the non-proprietary response to request 3.8. Two copies of the proprietary response to request 3.8 are also enclosed.

As counsel for the Applicant in this proceeding, we hereby request that the proprietary part of Supplement No. 10, relating to the details of the location and concentration of gadolinia anticipated for the initial core of Unit 2, be withheld from public disclosure pursuant to 10 C.F.R. § 2.790 and 10 C.F.R. § 9.5(a)(4). The basis for this request is the necessity for protecting the competitive position of the General Electric Company. The Applicant is of the opinion that the nature of the information contained in the response clearly indicates the necessity for non-disclosure, and the right of the public to be fully apprised as to the bases for and effects of proposed licensing actions will not be adversely affected by such non-disclosure.

The General Electric Company states:

This document contains information and is of the type which we customarily maintain in confidence and withhold from public disclosure. To the best of our knowledge and belief, this document has consistently been maintained in confidence and no public disclosure has been made of it.

It was classified proprietary pursuant to standard General Electric procedures pertaining to such classification. General Electric's definition of proprietary information is similar to that used in the courts to define "trade secrets". The definition encompasses "any formula, pattern, device or compilation of information which is used in one's business and which gives him an opportunity to obtain an advantage over competitors who do not know or use it." Additionally, a substantial element of secrecy must exist, so that, except by the use of improper means, there would be difficulty in acquiring the information. Some factors to be considered in determining whether given information is proprietary are: (1) the extent to which the information is known outside the business; (2) the extent to which it is known by employees and others involved at General Electric; (3) the extent of measures taken to guard the secrecy of the information; (4) the value of the information to General Electric and its competitors; (5) the amount of effort or money expended by General Electric in developing the information; and (6) the ease or difficulty with which the information could be properly acquired or duplicated by others. Additional information treated as confidential consists of business intelligence such as business plans, forecasts, financial data and similar information which, if obtained by competition could compromise the interest of the Company.

General Electric desires that the subject information be treated as proprietary because it has been obtained by GE at considerable expense and represents, we believe, a significant design improvement made possible by significantly improved design analytical methods. Further, the information has been presented in sufficient detail to allow knowledgeable competitors to qualify their own analytical design models with respect to the features of this design. A public disclosure of this information would thus handicap General Electric's competitive position in fuel technology. The internal distribution of this document has been extremely limited due to the importance of the material and the need to guard the secrecy of the information.

Copies of Amendment No. 11 and the non-proprietary part of Supplement No. 10 have today been served upon the persons listed in the enclosed service list. For the reason stated above, copies of the second part of Supplement No. 10 have not been so served.

Very truly yours,

LeBoeuf, Lamb, Leiby & MacRae

LeBoeuf, Lamb, Leiby & MacRae
Attorneys for Niagara Mohawk
Power Corporation

Enclosures

BEFORE THE UNITED STATES
ATOMIC ENERGY COMMISSION

In the Matter of	)	
	)	
NIAGARA MOHAWK POWER CORPORATION	)	Docket No. 50-410
(Nine Mile Point Unit 2)	)	

AMENDMENT NO. 11
TO
APPLICATION FOR LICENSES

On June 15, 1972, Niagara Mohawk Power Corporation filed its Application for Licenses in the above-captioned docket. On March 6, 1973, the AEC Staff requested that the Applicant submit certain additional information to support designated sections of its Preliminary Safety Analysis Report.

In response to this request, the Applicant hereby files Amendment No. 11 to the Application for Licenses transmitting Supplement No. 10 to its Preliminary Safety Analysis Report. This Supplement is in two parts. The first part is for public disclosure and consists of responses to all of the Staff's requests, with the exception of the request pertaining to Section 3.8 of the PSAR, and certain additional information. The Applicant's response to the request, pertaining to Section 3.8, is the second part of Supplement No. 10. A request that the second part of this Supplement

be withheld from public disclosure pursuant to 10 C. F. R. Section 2.790 (b) accompanies this Amendment.

WHEREFORE, Applicant prays as in its Application for Licenses, as amended.

Respectfully submitted,

NIAGARA MOHAWK POWER CORPORATION

By Philip D. Raymond
Philip D. Raymond
Vice President - Engineering

Subscribed and sworn to
before me this 11th day
of April 1973.

Carolyn F. Robertson
Notary Public

CAROLYN F. ROBERTSON
Notary Public in the State of New York
Qualified in Onon. Co. No. 34-8599125
My Commission Expires March 30, 1974

BEFORE THE UNITED STATES

ATOMIC ENERGY COMMISSION

In the Matter of)
)
Niagara Mohawk Power Corporation) Docket No. 50-410
(Nine Mile Point Unit 2))

CERTIFICATE OF SERVICE

I hereby certify that I have served, pursuant to the Atomic Energy Commission's Rules and Regulations, copies of Amendment No. 11 to the Application for Licenses in the above-captioned proceeding upon the following persons this 17th day of April 1973.

AEC Regulatory Staff
William Massar, Esq.
Bernard M. Bordenick, Esq.
Mark R. Haflich, Esq.
U.S. Atomic Energy Commission
Washington, D.C. 20545
(1 copy)

New York State Atomic Energy Council
Peter L. Rupert, Esq.
J. Bruce MacDonald, Esq.
Department of Commerce
99 Washington Avenue
Albany, New York 12210
(1 copy)

Daniel M. Head, Esq.
Atomic Safety and Licensing Board Panel
U.S. Atomic Energy Commission
Washington, D.C. 20545
(1 copy)

Joseph F. Tubridy, Esq.
4100 Cathedral Avenue, N.W.
Washington, D.C. 20016
(1 copy)

Dr. Marvin M. Mann
Technical Advisor
Atomic Safety and Licensing Board Panel
U.S. Atomic Energy Commission
Washington, D.C. 20545
(1 copy)

Dr. William E. Martin
Senior Ecologist
Battelle Memorial Institute
Columbus, Ohio 43201
(1 copy)

Mr. Gustave A. Linenberger
Atomic Safety and Licensing
Board Panel
U.S. Atomic Energy Commission
Washington, D.C. 20545
(1 copy)

Mr. Nathaniel H. Goodrich
Chairman
Atomic Safety and Licensing
Board Panel
U.S. Atomic Energy Commission
Washington, D.C. 20545
(1 copy)

Secretary
U.S. Atomic Energy Commission
Washington, D.C. 20545
(1 copy)

Mr. Angelo Giambusso
Deputy Director for Reactor Projects
U.S. Atomic Energy Commission
Washington, D.C. 20545
(2 copies)

Ms. Suzanne Weber
78 West Seneca Street
Oswego, New York 13126
(1 copy)

Ecology Action
c/o Richard Goldsmith
Syracuse University
College of Law
E. I. White Hall, Campus
Syracuse, New York 13210
(1 copy)

Mr. Alvin L. Krakau
Chairman, County Legislature
County Office Building
46 East Bridge Street
Oswego, New York 13126
(1 copy)

Mr. Robert P. Jones
Supervisor, Town of Scriba
R.D. #4
Oswego, New York 13126
(1 copy)

James P. McGranery, Jr.
LeBoeuf, Lamb, Leiby & MacRae
Attorneys for Niagara Mohawk
Power Corporation

Docket No. 50-410

Regulatory File Cy.

Received w/Ltr Dated 4-17-73

RECEIVED APR 17 1973 U.S. ATOMIC ENERGY COMMISSION Regulatory Mail Section

NMPNS - 2

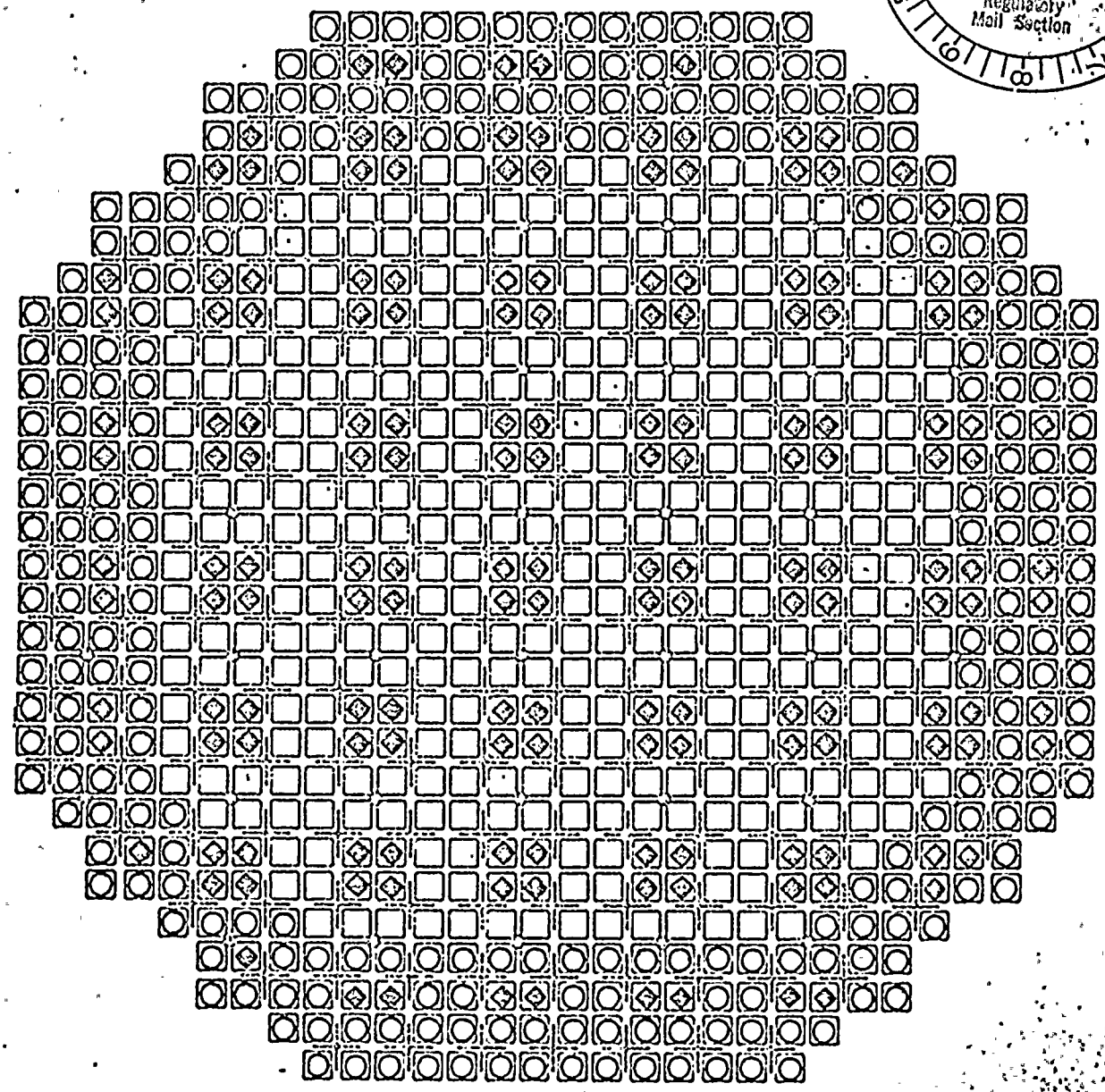

Figure 5
Core Configuration

Low Enrichment (Type 1)

High Enrichment (Type 2)

High Enrichment (Type 3)

2549

Regulatory File Cy.

Received w/Ltr Dated 4-17-73

NINE MILE POINT NUCLEAR STATION - UNIT 2

DOCKET NO. 50-410

PSAR SUPPLEMENT 10

This supplement, designated as PSAR Supplement 10, consists of the following:

Responses to the letter of March 6, 1973, from Mr. Robert A. Clark, Chief Gas Cooled Reactors Branch, Directorate of Licensing (including revisions to affected sections).

Revisions to Sections 1,2,4,6,8,10,12, and Appendix C.

2549

NMPNS-2 PSAR

PAGE REVISIONS

SUPPLEMENT 10

revised 4-23-73 LR

The following pages, tables and figures are to be inserted in the PSAR. These pages are either replacement pages or new pages as indicated below.

Replace old page(s)	Insert new page(s)
VOLUME I	
1.4-3	1.4-3
2-viii	2-viii
-	2-viiia
2.5-6	2.5-6
2.7-8	2.7-8
Fig. 2.5-1	Fig. 2.5-1
Fig. 2.5-2	Fig. 2.5-2
Fig. 2.7-7	Fig. 2.7-7A
-	Fig. 2.7-7B
-	Fig. 2.7-7C
-	Fig. 2.7-7D
Table R2.26-2 (2 of 4 through 4 of 4)(In Supplement to Section 2)	Table R2.26-2 (2 of 4 through 4 of 4)

After Table R2.26-2 (4 of 4) in the Supplement to Section 2, insert new pages R2.27-1 through R2.38-1.

VOLUME II

After Table R3.4-4 in the Supplement to Section 3, insert new pages R3.5-1 through R3.9-1.

4.3-5	4.3-5

After page R4.17-1 in the Supplement to Section 4, insert new pages R4.18-1 through R4.21-1.

VOLUME III

6.7-3	6.7-3
Fig. 6.7-20	Fig. 6.7-20

VOLUME IV

7.19-1 through 7.19-5	7.19-1 through 7.19-12

After page R7.13-1 in the Supplement to Section 7, insert new pages R7.14-1 through R7.18-3.

8.5-2	8.5-2
Table 8.6-2 (1 of 1)	Table 8.6-2 (1 of 1)
R8.5-1 (in Supplement to Section 8)	R8.5-1 and R8.5-2

NMPNS-2 PSAR

PAGE REVISIONS (CONT'D)

SUPPLEMENT 10

Replace old page(s)	Insert new page(s)
VOLUME IV (CONT'D)	
R8.9-6 and R8.9-7 (in Supplement to Section 8)	R8.9-6 and R8.9-7
R8.9-10 and R8.9-11 (in Supplement to Section 8)	R8.9-10 and R8.9-11
R8.14-2 (in Supplement to Section 8)	R8.14-2

After page R8.16-1 in the Supplement to Section 8, insert new pages R8.17-1 through R8.21-3.

VOLUME V

R10.46-1 (in Supplement to Section 10)	R10.46-1
Table R10.56-1 (7 of 16 and 8 of 16) (in Supplement to Section 10)	Table R10.56-1 (7 of 16 and 8 of 16)

After page R10.57-1 in the Supplement to Section 10, insert new pages R10.58-1 through R10.61-1.

12.3-3	12.3-3
12.3-6 through 12.3-8	12.3-6 through 12.3-8
Fig. 12.5-4A	Fig. 12.5-4A

After page R12.19-3 in the Supplement to Section 12, insert new pages R12.20-1 through R12.22-1.

VOLUME VI

After Table R14.9-1 in the Supplement to Section 14, insert new pages R14.10-1 through Fig. R14.13-2.

VOLUME VII

Fig. R-C-2.1-1 through Fig. R-C.2.1-10 (in supplement to Appendix C)	Fig. R-C.2.1-1 through Fig. R-C.2.1-10

VOLUME VIII

No Revisions.

BEFORE THE UNITED STATES

ATOMIC ENERGY COMMISSION

In the Matter of	)	
	)	
Niagara Mohawk Power Corporation	)	Docket No. 50-410
(Nine Mile Point Unit 2)	)	

Proprietary Response of Applicant to Request 3.8, Supplement No. 10 to Preliminary Safety Analysis Report, Transmitted by Amendment No. 11 to the Application for Licenses

Copy#1
2549

GENERAL ELECTRIC COMPANY PROPRIETARY

Request 3.8

Your response to Questions 3.4(d) is inadequate concerning details of the gadolinia core design. Furnish details of what the preliminary core design is. Include a comparison of the possibilities for NMPNS with the final core designs of other power plants which are in various stages of review.

Response

Details of the Preliminary Gadolinia Core Design

The following describes the details of the preliminary gadolinia core design for NMPNS-2. The detailed enrichment distributions have already been included in the NMPNS-2 PSAR (Figure 3.5-2). It should be noted that both the enrichment distribution and the gadolinia specifications are preliminary. The details of the preliminary design should be considered as typical for a plant of this size, class and performance requirement. These details are subject to change and, in fact, are likely to be modified during the course of the final design process.

Details of the gadolinia design are shown in attached Figures 1 thru 5. This gadolinia design is similar to that used in the Duane Arnold and Brunswich core designs. The following paragraphs describe each bundle type.

Type 1 bundles do not contain gadolinia-urania rods. Type 2 bundles have 2 full-length rods of 2 w/o gadolinia-urania as shown in Figures 1 and 2. These Type 2 fuel bundles are loaded in the peripheral region of the core.

Type 3 fuel bundles have 2 full-length rods of 3 w/o gadolinia urania and 2 partial length gadolinia-urania rods as shown in Figures 3 and 4. These partial length gadolinia-urania rods are used for shaping power axially. The Type 3 bundles are used in combination with the Type 1 bundles throughout the central region of the core. The core configuration for the three different type bundles is shown in Figure 5 which is a nonproprietary figure.

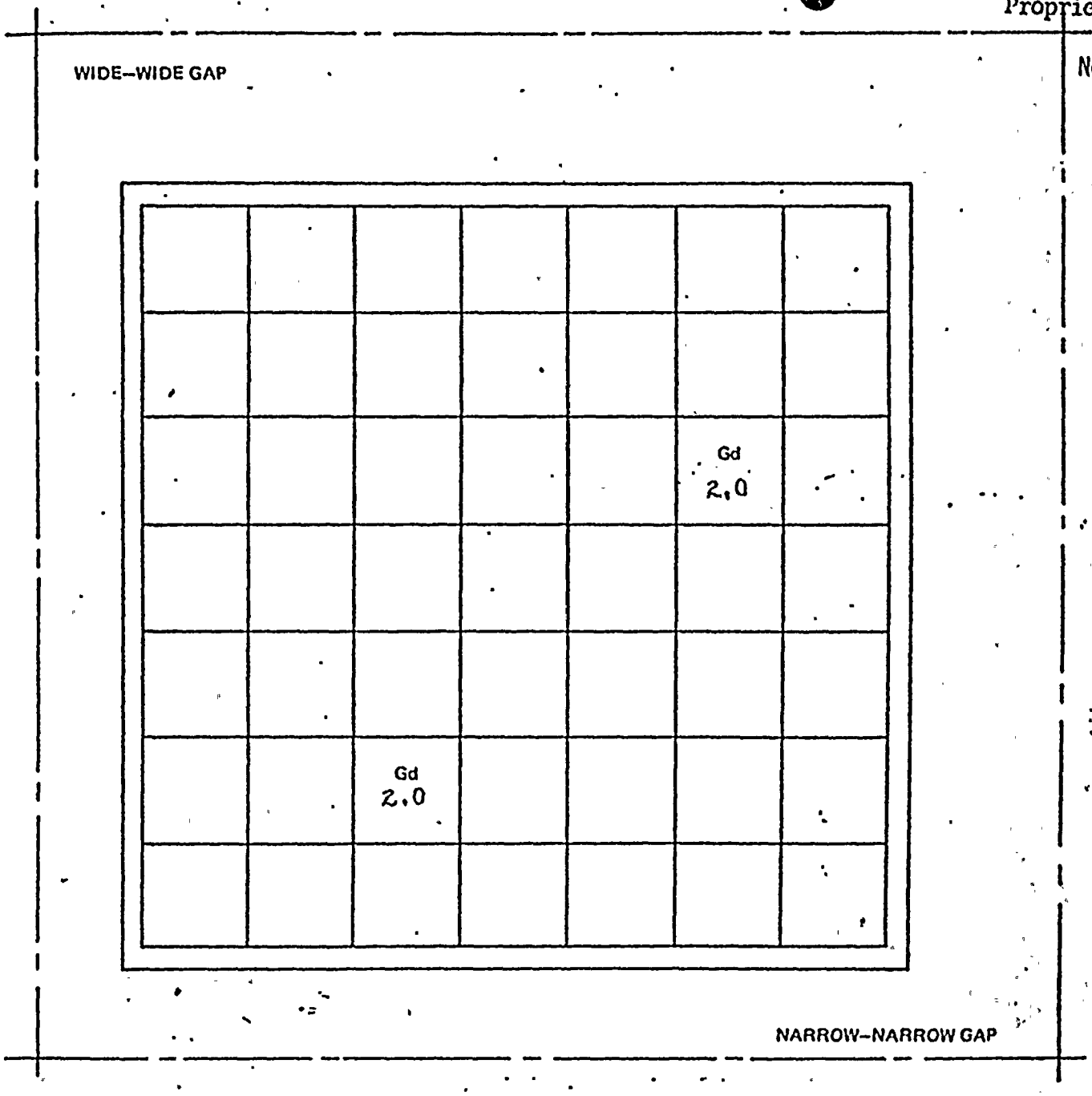

Figure 1

GADOLINIA PLACEMENT AND wt % FOR 2 Gd PIN BUNDLE
BUNDLE TYPE 2

7 x 7 LATTICE

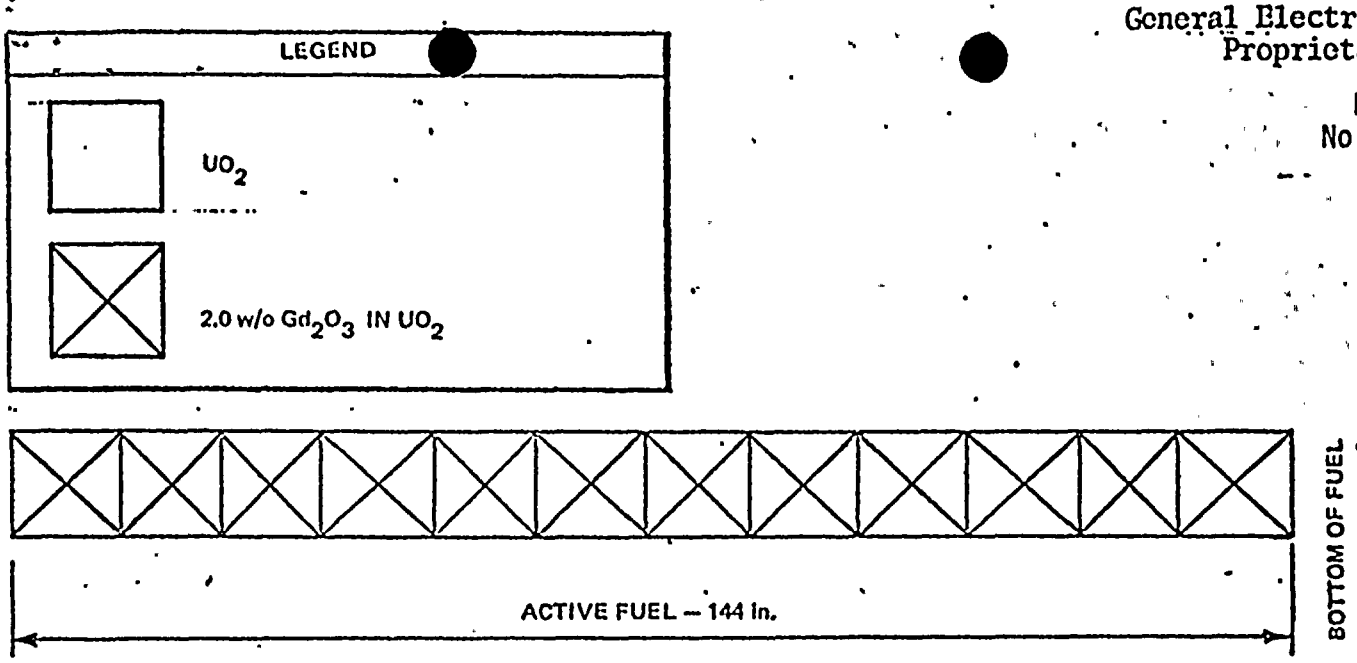

FULL GADOLINIA ROD (F)

GADOLINIA DISTRIBUTION
TYPE 2 BUNDLE

Figure 2

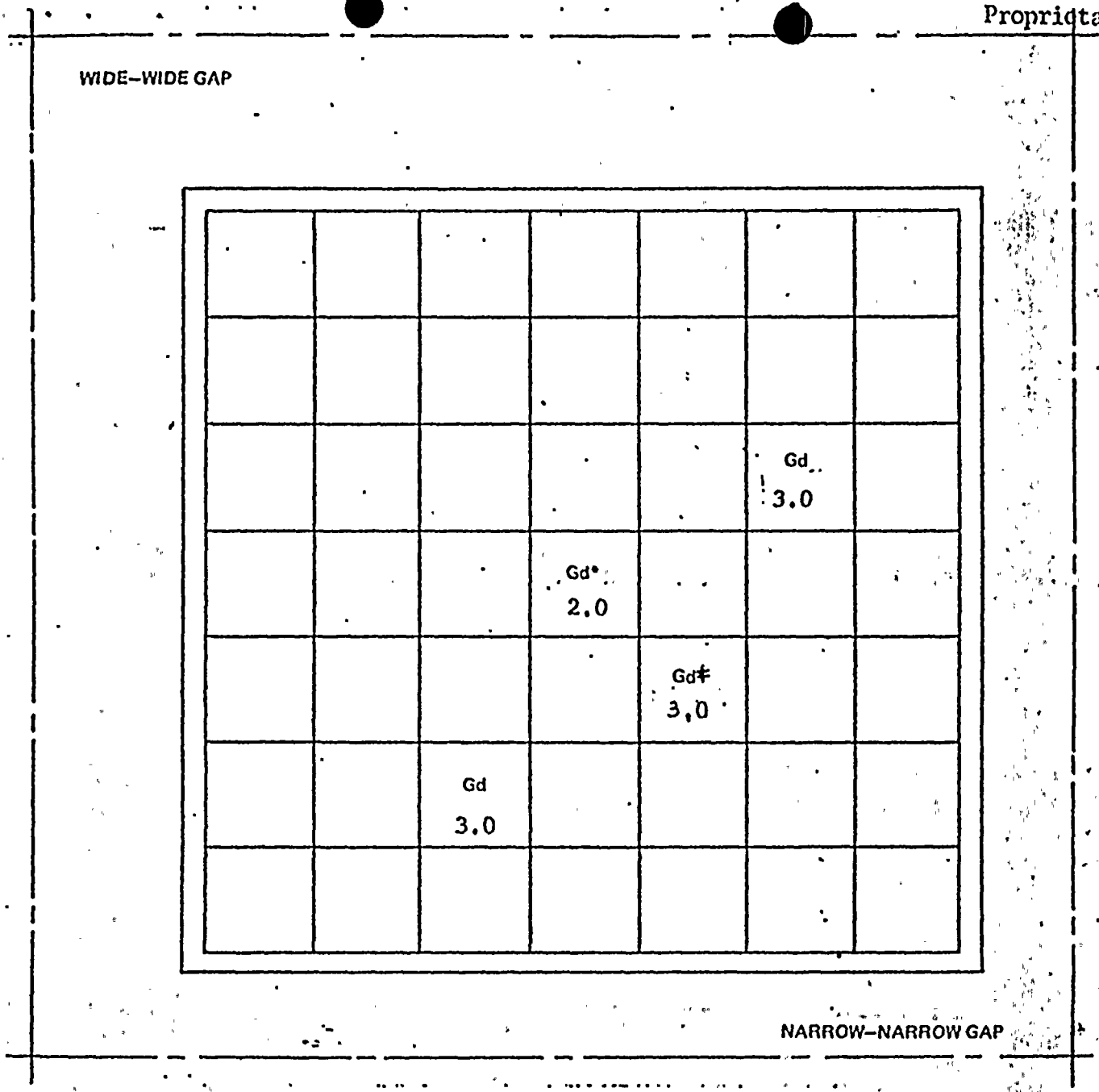

*PARTIAL LENGTH Gd (P1)

‡PARTIAL LENGTH Gd (P2)

GADOLINIA PLACEMENT AND wt % FOR 3 Gd PIN BUNDLE
BUNDLE TYPE 3

7 x 7 LATTICE

Figure 3

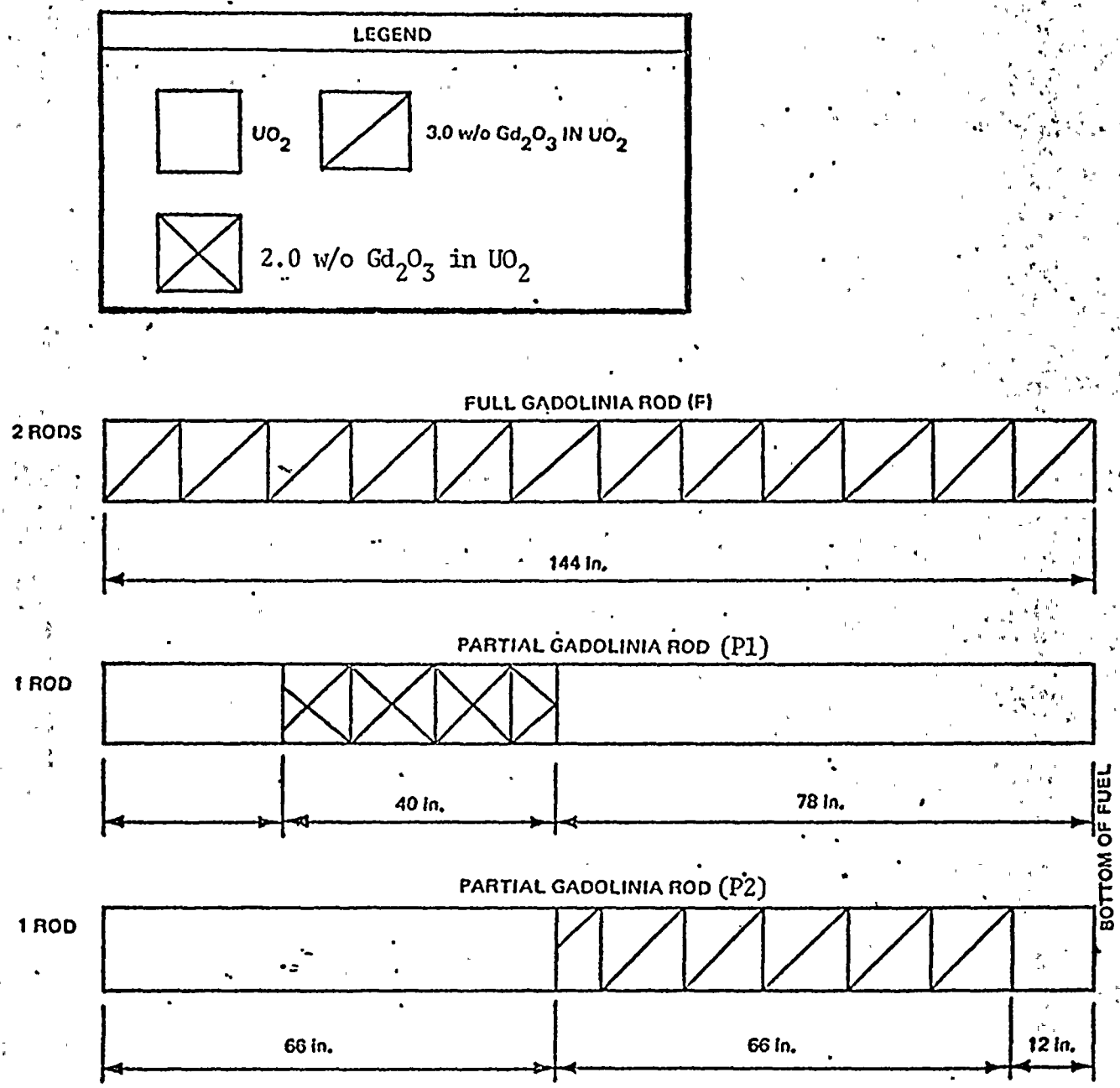

GADOLINIA DISTRIBUTION – TYPE 3 BUNDLE

Figure 4

NMPNS - 2

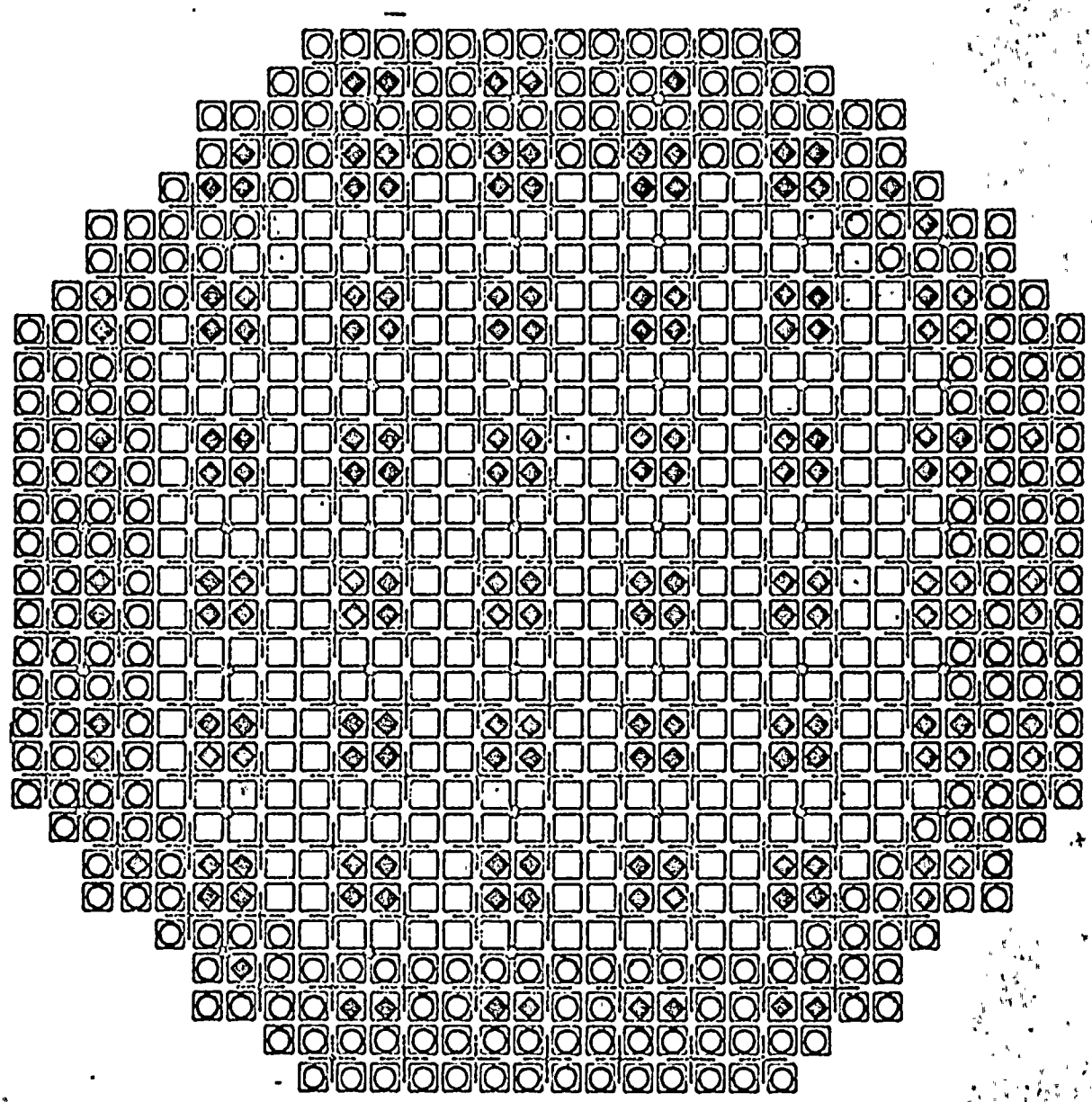

Figure 5
Core Configuration

Low Enrichment (Type 1)

High Enrichment (Type 2)

High Enrichment (Type 3)