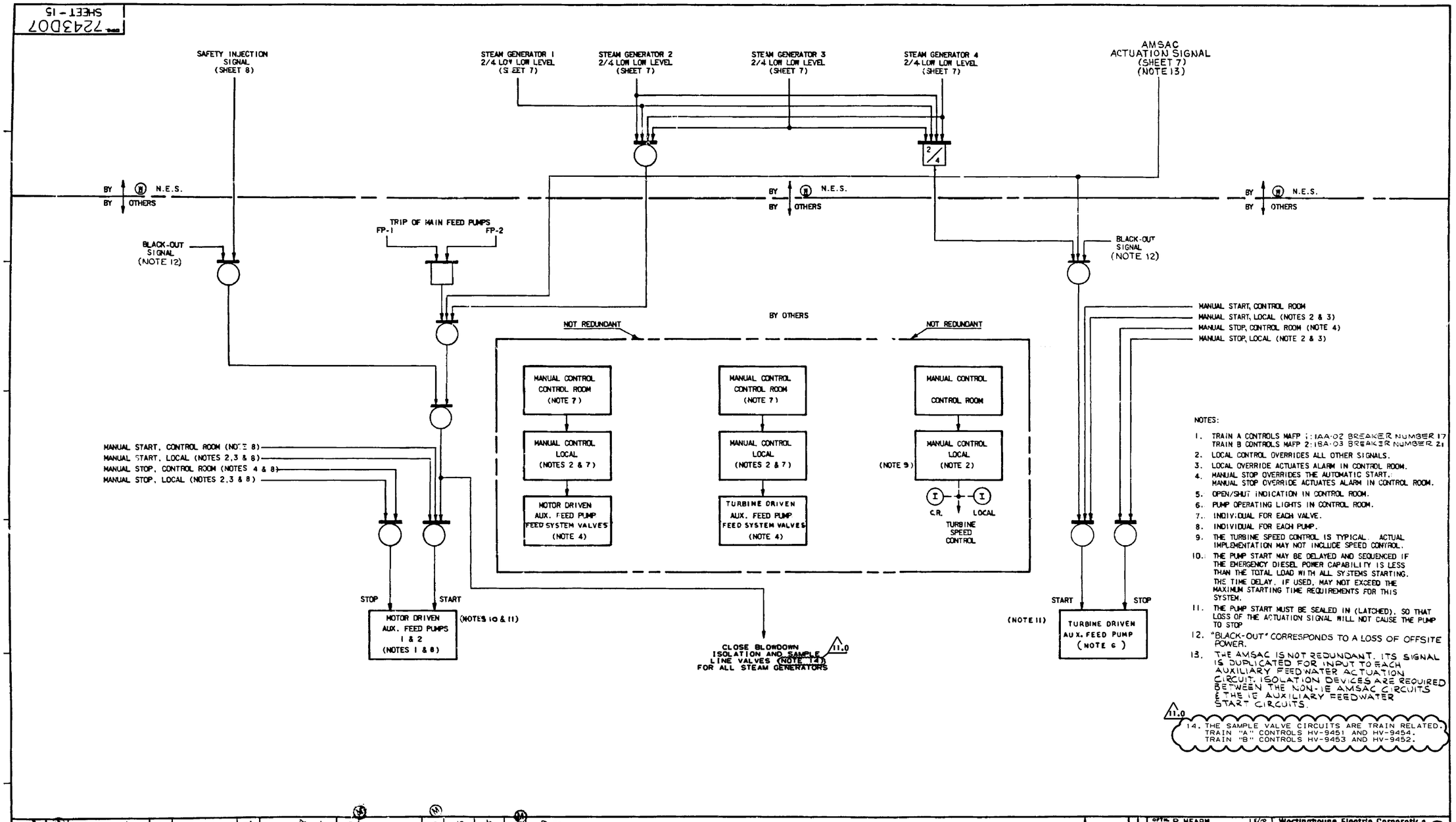

NOTES:

1. TRAIN A CONTROLS MAFP 1: 1AA-02 BREAKER NUMBER 17
   TRAIN B CONTROLS MAFP 2: 1BA-03 BREAKER NUMBER 21
2. LOCAL CONTROL OVERRIDES ALL OTHER SIGNALS.
3. LOCAL OVERRIDE ACTUATES ALARM IN CONTROL ROOM.
4. MANUAL STOP OVERRIDES THE AUTOMATIC START.
   MANUAL STOP OVERRIDE ACTUATES ALARM IN CONTROL ROOM.
5. OPEN/SHUT INDICATION IN CONTROL ROOM.
6. PUMP OPERATING LIGHTS IN CONTROL ROOM.
7. INDIVIDUAL FOR EACH VALVE.
8. INDIVIDUAL FOR EACH PUMP.
9. THE TURBINE SPEED CONTROL IS TYPICAL. ACTUAL IMPLEMENTATION MAY NOT INCLUDE SPEED CONTROL.
10. THE PUMP START MAY BE DELAYED AND SEQUENCED IF THE EMERGENCY DIESEL POWER CAPABILITY IS LESS THAN THE TOTAL LOAD WITH ALL SYSTEMS STARTING. THE TIME DELAY, IF USED, MAY NOT EXCEED THE MAXIMUM STARTING TIME REQUIREMENTS FOR THIS SYSTEM.
11. THE PUMP START MUST BE SEALED IN (LATCHED), SO THAT LOSS OF THE ACTUATION SIGNAL WILL NOT CAUSE THE PUMP TO STOP
12. "BLACK-OUT" CORRESPONDS TO A LOSS OF OFFSITE POWER.
13. THE AMSAC IS NOT REDUNDANT. ITS SIGNAL IS DUPLICATED FOR INPUT TO EACH AUXILIARY FEEDWATER ACTUATION CIRCUIT. ISOLATION DEVICES ARE REQUIRED BETWEEN THE NON-1E AMSAC CIRCUITS & THE 1E AUXILIARY FEEDWATER START CIRCUITS.

11.0

14. THE SAMPLE VALVE CIRCUITS ARE TRAIN RELATED. TRAIN "A" CONTROLS HV-9451 AND HV-9454. TRAIN "B" CONTROLS HV-9453 AND HV-9452.

REV	CHANGE	BY	DATE
2	GAE/GBE-300 ECN-30394 ADDED NEW NOTES 4 & 11, RESEQUENCED NOTES 5 THRU 10.	P. HEARN	7-18-74
3	GAE/GBE-300 ECN-30888 REVISIONS CIRCLED		9-15-76
4	GAE/GBE-300 ECN-31242 REV'S CIRCLED		7-17-78
5	GAE/GBE-300 ECN-31496 CHANGES CIRCLED.	D. PETROCELLI	11/3/79
6	GAE/GBE-300 ECN-33209 CHANGES CIRCLED		1/13/80
7	GAE/GBE-300 ECN-34109 CHANGES CIRCLED	O'HARA	7-28-87

DFTR.	P. HEARN	6/13/73	Westinghouse Electric Corporation — NUCLEAR ENERGY SYSTEMS, PITTSBURGH, PA., U.S.A.
CHKD.			
DES. ENG.		7/18/73	TITLE: GEORGIA POWER CO. ALVIN W. VOGTLE UNITS 1 & 2 FUNCTIONAL DIAGRAMS AUXILIARY FEEDWATER PUMPS STARTUP
MFG. ENG.			
MTLS. ENG.			
APP.		7-23	SCALE
APP.			DIMENSIONS IN INCHES
APP.			
DFTG. SUPV.		7-23	DO NOT SCALE

7243D07 SHEET - 15

SIZE A 2 3 4 5 6 7

THIS DWG. IS REFERENCED IN VENDOR MANUAL:

TAB/SECT. N/A
PAGE
FIGURE

CAD: MICROSTATION | DFV-01

Southern Nuclear Operating Company, Inc.
FOR
VOGTLE ELECTRIC GENERATING PLANT UNIT NO. 1

VERSION 11.0 | DATE 4-27-05

REVISED BY SNC PER ABN-80651, VER. 1.0

SEE MICROFILM FOR PREVIOUS VER. SIGNATURES.

TITLE:
FUNCTIONAL DIAGRAMS AUXILIARY FEEDWATER PUMPS STARTUP

BY	CHK'D	APPR.1	APPR.2
DFV	PWG	ASK	X

VENDOR: WESTINGHOUSE | P.O.#:

DRAWING NO. 1X6AA02-00239

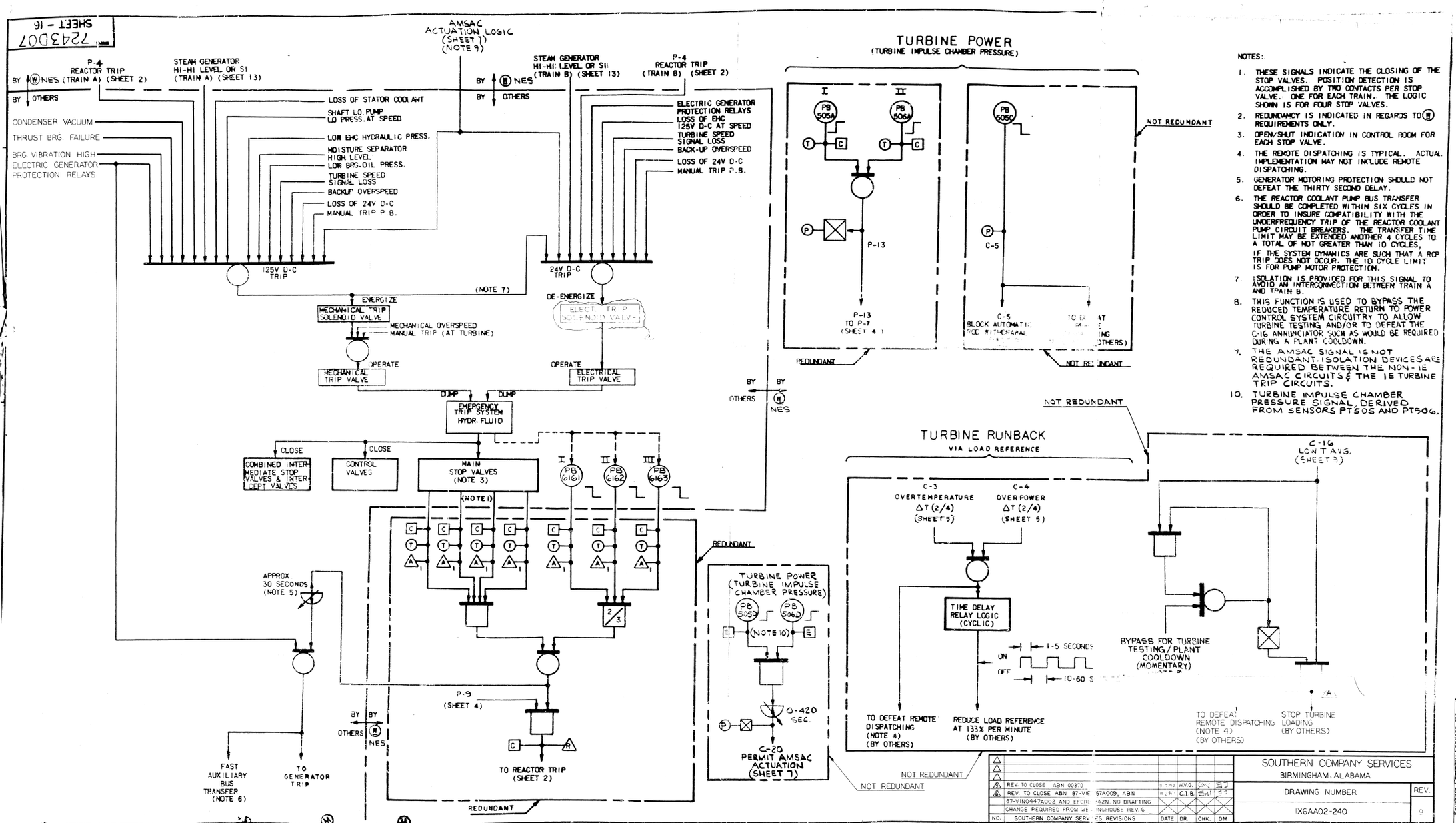

NOTES:

1. THESE SIGNALS INDICATE THE CLOSING OF THE STOP VALVES. POSITION DETECTION IS ACCOMPLISHED BY TWO CONTACTS PER STOP VALVE. ONE FOR EACH TRAIN. THE LOGIC SHOWN IS FOR FOUR STOP VALVES.
2. REDUNDANCY IS INDICATED IN REGARDS TO (W) REQUIREMENTS ONLY.
3. OPEN/SHUT INDICATION IN CONTROL ROOM FOR EACH STOP VALVE.
4. THE REMOTE DISPATCHING IS TYPICAL. ACTUAL IMPLEMENTATION MAY NOT INCLUDE REMOTE DISPATCHING.
5. GENERATOR MOTORING PROTECTION SHOULD NOT DEFEAT THE THIRTY SECOND DELAY.
6. THE REACTOR COOLANT PUMP BUS TRANSFER SHOULD BE COMPLETED WITHIN SIX CYCLES IN ORDER TO INSURE COMPATIBILITY WITH THE UNDERFREQUENCY TRIP OF THE REACTOR COOLANT PUMP CIRCUIT BREAKERS. THE TRANSFER TIME LIMIT MAY BE EXTENDED ANOTHER 4 CYCLES TO A TOTAL OF NOT GREATER THAN 10 CYCLES, IF THE SYSTEM DYNAMICS ARE SUCH THAT A RCP TRIP DOES NOT OCCUR. THE 10 CYCLE LIMIT IS FOR PUMP MOTOR PROTECTION.
7. ISOLATION IS PROVIDED FOR THIS SIGNAL TO AVOID AN INTERCONNECTION BETWEEN TRAIN A AND TRAIN B.
8. THIS FUNCTION IS USED TO BYPASS THE REDUCED TEMPERATURE RETURN TO POWER CONTROL SYSTEM CIRCUITRY TO ALLOW TURBINE TESTING AND/OR TO DEFEAT THE C-16 ANNUNCIATOR SUCH AS WOULD BE REQUIRED DURING A PLANT COOLDOWN.
9. THE AMSAC SIGNAL IS NOT REDUNDANT. ISOLATION DEVICES ARE REQUIRED BETWEEN THE NON-1E AMSAC CIRCUITS & THE 1E TURBINE TRIP CIRCUITS.
10. TURBINE IMPULSE CHAMBER PRESSURE SIGNAL DERIVED FROM SENSORS PT505 AND PT506.

NO.	SOUTHERN COMPANY SERVICES REVISIONS	DATE	DR.	CHK.	DM
4	REV. TO CLOSE ABN 00370				
3	REV. TO CLOSE ABN 87-VIF-57A009, ABN		C.I.B.		
	87-VIND447A002 AND EFCR-42N. NO DRAFTING				
	CHANGE REQUIRED FROM WESTINGHOUSE REV. 6				

SOUTHERN COMPANY SERVICES
BIRMINGHAM, ALABAMA

DRAWING NUMBER: 1X6AA02-240 REV. 9

Westinghouse Electric Corporation
NUCLEAR ENERGY SYSTEMS, PITTSBURGH, PA., U.S.A.

TITLE: GEORGIA POWER CO. ALVIN W VOGTLE UNITS 1 & 2 FUNCT. DIAG. TURBINE TRIP, RUNBACKS, AND OTHER SIGNALS (W REQUIREMENTS)

SCALE: DIMENSIONS IN INCHES: DO NOT SCALE

7243D07 SHEET - 16

GEORGIA POWER COMPANY
PLANT: VOGTLE ELECTRIC GENERATING PLANT
UNITS: 1 & 2 SPIN: AASFED03
STATUS: APPROVED
CERTIFICATION LTR. NO. GP-13060
AUTHORITY: R.S. HOWARD
ENGR. LTR. NO. EP/SA-53512

WESTINGHOUSE PROPRIETARY DATA

THIS DOCUMENT CONTAINS PROPRIETARY INFORMATION OF THE WESTINGHOUSE ELECTRIC CORPORATION WATER REACTOR DIVISIONS. IT IS TRANSMITTED TO YOU IN CONFIDENCE AND TRUST, AND IS TO BE RETURNED UPON REQUEST. ITS CONTENTS MAY NOT BE DISCLOSED IN WHOLE OR IN PART TO OTHERS OR USED FOR OTHER THAN THE PURPOSE FOR WHICH TRANSMITTED WITHOUT THE PRIOR WRITTEN PERMISSION OF THE WESTINGHOUSE WATER REACTOR DIVISIONS.

Southern Company Services, Inc.
DOCUMENT STATUS
DATE RECEIVED 11-15-90
PLANT VOGTLE
1X6AA02-240-13
FUNCT. DIAG. TURBINE TRIP, RUN BACKS, AND OTHER SIGNALS
VENDOR WVE
P.O. PAV-2

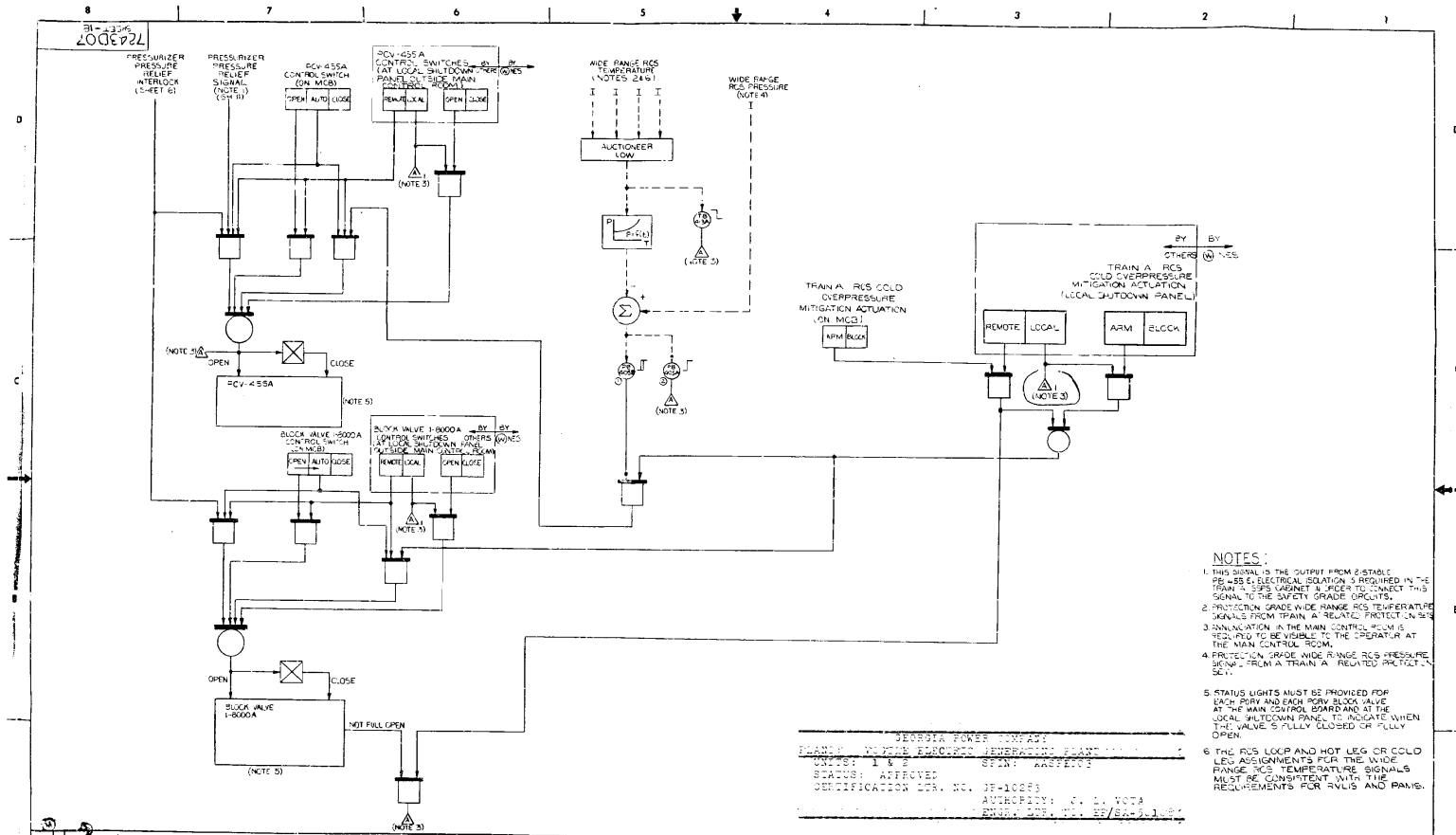

NOTES:

1. THIS SIGNAL IS THE OUTPUT FROM 2 STABLE PB-455 E. ELECTRICAL ISOLATION IS REQUIRED IN THE TRAIN A SSPS CABINET IN ORDER TO CONNECT THIS SIGNAL TO THE SAFETY GRADE CIRCUITS.
2. PROTECTION GRADE WIDE RANGE RCS TEMPERATURE SIGNALS FROM TRAIN A RELATED PROTECTION SET.
3. ANNUNCIATION IN THE MAIN CONTROL ROOM IS REQUIRED TO BE VISIBLE TO THE OPERATOR AT THE MAIN CONTROL ROOM.
4. PROTECTION GRADE WIDE RANGE RCS PRESSURE SIGNAL FROM A TRAIN A RELATED PROTECTION SET.
5. STATUS LIGHTS MUST BE PROVIDED FOR EACH PORV AND EACH PORV BLOCK VALVE AT THE MAIN CONTROL BOARD AND AT THE LOCAL SHUTDOWN PANEL TO INDICATE WHEN THE VALVE IS FULLY CLOSED OR FULLY OPEN.
6. THE RCS LOOP AND HOT LEG OR COLD LEG ASSIGNMENTS FOR THE WIDE RANGE RCS TEMPERATURE SIGNALS MUST BE CONSISTENT WITH THE REQUIREMENTS FOR RVLIS AND PAMS.

GEORGIA POWER COMPANY
PLANT: ALVIN W. VOGTLE GENERATING PLANT
UNIT(S): 1 & 2 SPIN: ARCHIVES
STATUS: APPROVED
CERTIFICATION LTR. NO. SE-10283
AUTHORITY: C. L. VOTA
ENGR. ORG. CD.: SE/SA-3-1-87

REV	DESCRIPTION	DATE
1	GA/FORE 2300	
2	GA/FORE 2300	

Westinghouse Electric Corporation
WATER REACTOR DIVISIONS · MONROEVILLE, PA. U.S.A.
GEORGIA POWER CO.
ALVIN W. VOGTLE UNITS 1 & 2
FUNCTIONAL DIAGRAM
PRESSURIZER PRESSURE RELIEF SYSTEM
(TRAIN A)
SIZE D SYSTEM NO. DWG NO. 7243D07
SUB. 12 SHT 18

MICROFILM QUALITY ACCEPTABLE

VOGTLE ELECTRIC GENERATING PLANT
JOB NO. 9510

EQUIPMENT TAG NO. VAR
STARTUP DESIGNATION NO. VAR
ACTIVITY NO. VAR
SYSTEM NO. VAR
CATEGORY NO. VA

RETROFITTING REQUIRED ☐ YES ☒ NO

DISTRIBUTION TO: FOR: REVIEW	INFO
• MECHANICAL	
• HVAC	
NSSS	
BOP	
• CONTROL SYSTEMS	✓
• ELECTRICAL	✓
WIRING	
CONDUIT	
• HAZARDS	
• CIVIL/STRUCTURAL	
• NUCLEAR	
• STRESS/PLANT DESIGN	
CODES AND STANDARDS	
• ARCHITECTURAL	
• STARTUP	
• CONSTRUCTION	
• NOT REQ'D BY ENGRG	
• CLIENT	
• EQUIP. QUALIFICATION	
• M & QS	
• WESTINGHOUSE	

IDENTIFYING TITLE OF THIS DOCUMENT
Functional Diagram

Eochtel Log No 1 X6AA02-494-42 10-22-87

IMPORTANT
Permission to proceed does not constitute acceptance or approval of design details, calculations, analyses, test methods or materials developed or selected by the supplier and does not relieve supplier from full compliance with contractual obligations.

DATE RECEIVED 1-9-86
SIGNED
DATE

DOCUMENT STATUS
1 ☒ WORK MAY PROCEED
2 ☐ REVISE AND RESUBMIT WORK MAY PROCEED SUBJECT TO INCORPORATION OF CHANGES INDICATED
3 ☐ REVISE AND RESUBMIT WORK MAY NOT PROCEED
4 ☐ INFORMATION ONLY DISTRIBUTION REQ'D? ☐ YES
M ☐ RESUBMIT – NOT ACCEPTABLE FOR MICROFILM WORK MAY PROCEED

PP-5937 (9510) 9-84

SUPERSEDES
LCG NO. 11X6AA03-414-44

GPC PLANT VOGTLE CONSTR MICROGRAPHICS
I CERTIFY THAT THE IMAGE CONTAINED ON THIS FRAME WAS MADE IN THE NORMAL AND REGULAR COURSE OF BUSINESS, ON THE DATE STATED BELOW AND THAT IT IS AN ACCURATE REPRODUCTION OF THE DOCUMENT SUBMITTED TO MICROGRAPHICS.
DATE
CAMERA OPERATOR
SECTION SUPERVISOR

16X

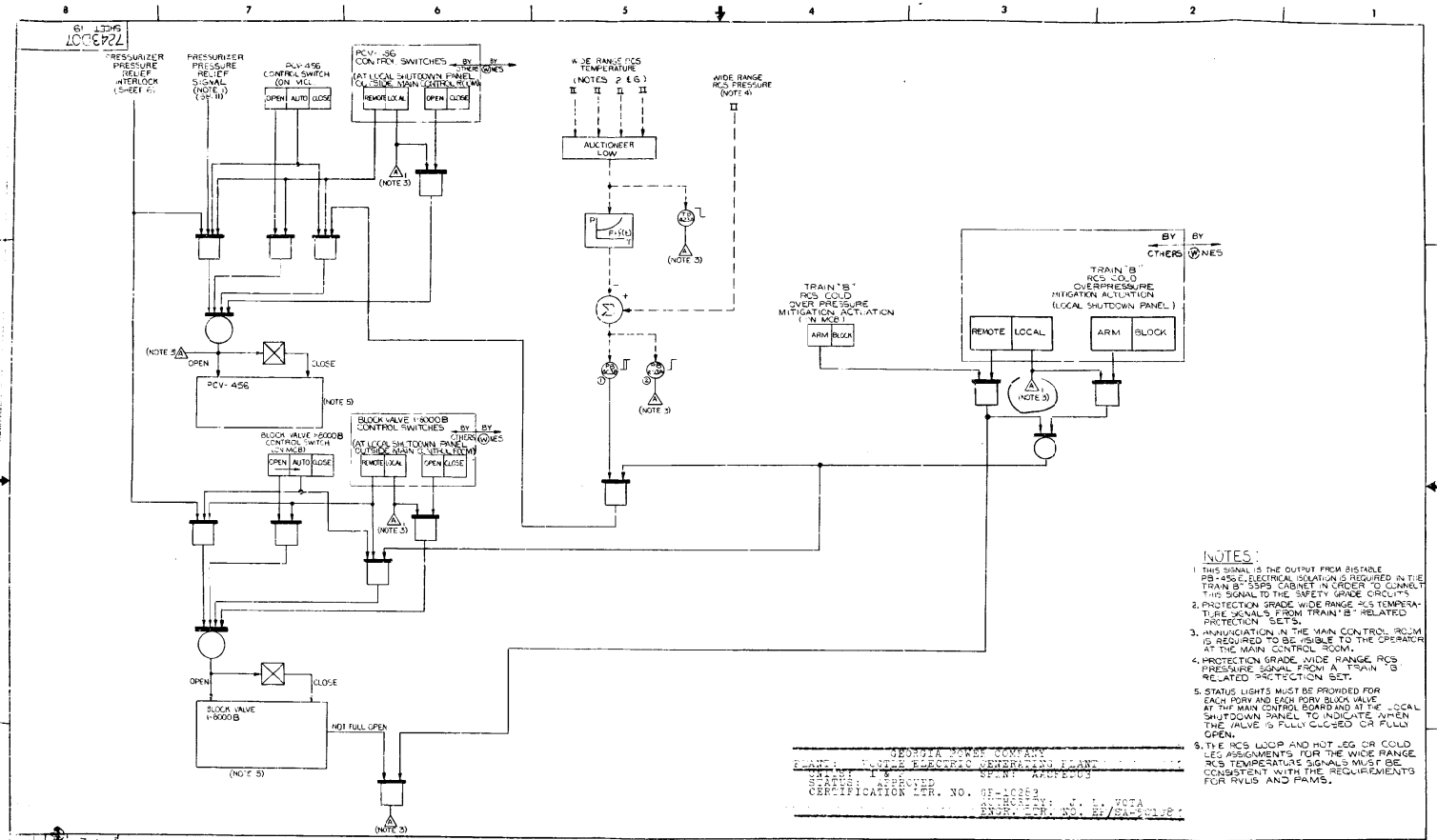

VOGTLE ELECTRIC GENERATING PLANT — JOB NO. 9510

EQUIPMENT TAG NO. VAR

STARTUP DESIGNATION NO. VAR
ACTIVITY NO. VAR
SYSTEM NO. VAR
CATEGORY NO. NA

RETROFITTING REQUIRED ☐ YES ☒ NO

DISTRIBUTION TO: FOR: REVIEW	INFO.
• MECHANICAL	
• HVAC	
NSSS	
BOP	
• CONTROL SYSTEMS	✓
• ELECTRICAL	✓
WIRING	
CONDUIT	
• HAZARDS	
• CIVIL/STRUCTURAL	
• NUCLEAR	
• STRESS/PLANT DESIGN	
CODES AND STANDARDS	
• ARCHITECTURAL	
• STARTUP	
• CONSTRUCTION	
• NOT REQ'D BY ENGRG	
• CLIENT	
• EQUIP. QUALIFICATION	
• M & QS	
• WESTINGHOUSE	

IDENTIFYING TITLE OF THIS DOCUMENT: functional diag

Bechtel Log No. 1 X6AA02-495-A2 (102287)

IMPORTANT

Permission to proceed does not constitute acceptance or approval of design detail, calculations, analyses, test methods or materials developed or selected by the supplier and does not relieve supplier from full compliance with contractual obligations.

DATE RECEIVED 1-9-86 — SIGNED

DOCUMENT STATUS
1 ☒ OK MAY PROCEED
2 ☐ REVISE AND RESUBMIT WORK MAY PROCEED SUBJECT TO INCORPORATION OF CHANGES INDICATED
3 ☐ REVISE AND RESUBMIT WORK MAY NOT PROCEED
4 ☐ INFORMATION ONLY DISTRIBUTION REQ'D? ☐ YES
M ☐ RESUBMIT – NOT ACCEPTABLE FOR MICROFILM. WORK MAY PROCEED

PF-5587 (95101 9/84)

SUPERSEDES LOG NO. 1/3X6AA02-495-A

GPC PLANT VOGTLE CONSTR MICROGRAPHICS
I CERTIFY THAT THE IMAGE CONTAINED ON THIS FRAME WAS MADE IN THE NORMAL AND REGULAR COURSE OF BUSINESS, ON THE DATE STATED BELOW, AND THAT IT IS AN ACCURATE REPRODUCTION OF THE DOCUMENT SUBMITTED TO MICROGRAPHICS.
DATE 11/16/89 CAMERA OPERATOR SECTION SUPERVISOR
16X

7243D07 SHEET - 20

PRESSURIZER LEVEL CHANNELS

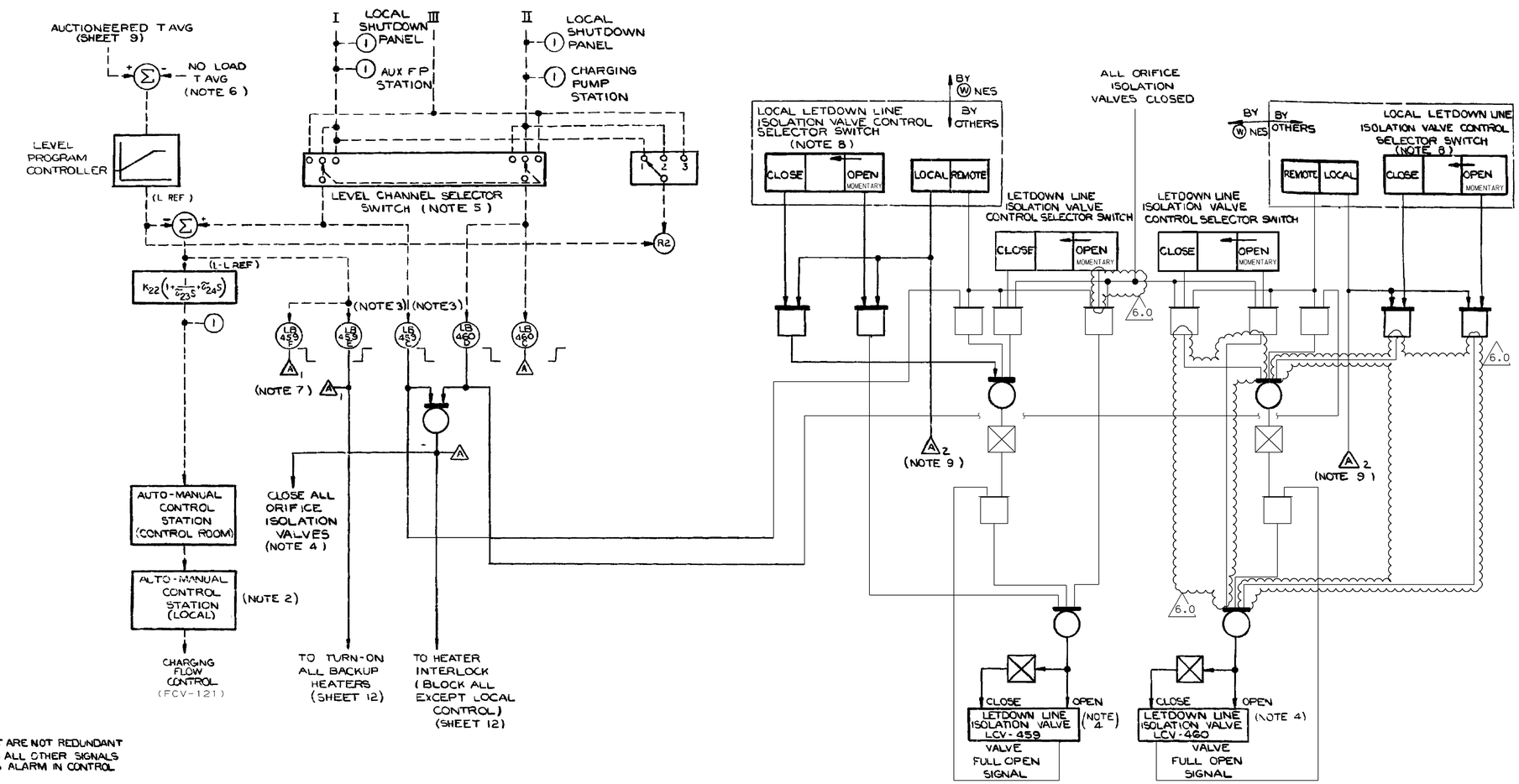

NOTES

1. ALL CIRCUITS ON THIS SHEET ARE NOT REDUNDANT
2. LOCAL CONTROL OVERRIDES ALL OTHER SIGNALS LOCAL OVERRIDE ACTUATES ALARM IN CONTROL ROOM
3. LEVEL BISTABLES NO LB-459C, LB-459E, & LB-460D ARE ENERGIZE TO ACTUATE.
4. OPEN / SHUT INDICATION IN CONTROL ROOM.
5. CENTER POSITION NORMALLY SELECTED.
6. ADJUSTABLE SETPOINT WITHIN CONTROLLER.
7. ALARM 1 MUST HAVE RESET CAPABILITY.
8. MANUAL CONTROL OF THESE VALVES CONSISTS OF TWO SELECTOR SWITCHES ON THE LOCAL SHUTDOWN PANEL, ONE SWITCH PER VALVE. SUPPLIED BY OTHERS.
9. ANNUNCIATION IN THE MAIN CONTROL ROOM IS REQUIRED VISIBLE TO THE OPERATOR AT THE MCB

1	SO GALE/GBE-300 NOS-28/92-2527		
0	CHANGE		
	GALE/GBE-300	2/8/92	
	ECN-32037	2/8/92	
	CHANGES CIRCLED	2/8/92	

DFTM	B STEMMLER	8.18.86
CHKR		
DES ENG		8/1/86
MFG ENG		
MTLS ENG		
APPD	RHLeather	8/21/86
APPD		
APPD		
DFTG SUPV		8.27.86
REF ASSY		
REF DWG		

Westinghouse Electric Corporation
NUCLEAR ENERGY SYSTEMS PITTSBURGH PA U S A

TITLE GEORGIA POWER CO
ALVIN W VOGTLE UNITS 1 & 2
FUNCTIONAL DIAGRAMS
PRESSURIZER LEVEL CONTROL

SCALE
DIMENSIONS IN INCHES
DO NOT SCALE

7243D07
SHEET 20

SUB# 2344

SIZE D 34X22

THIS DWG. IS REFERENCED IN VENDOR MANUAL: N/A	CAD MICROSTATION BgT/01 — 1X6AA02-00496.DGN
TAB/SECT. N/A	Southern Nuclear Operating Company, Inc. FOR
PAGE N/A	VOGTLE ELECTRIC GENERATING PLANT UNIT NO. 1
FIGURE N/A	
VERSION 6.0 — DATE 12-21-05	TITLE: FUNCTIONAL DIAGRAM
REVISED BY SNC PER ABN-81187, VER.1.0	
SEE MICROFILM FOR PREVIOUS REV. SIGNATURES.	
BY: BgT — CHK'D: PWG — APPR.1: ASK — APPR.2:	VENDOR: WESTINGHOUSE — P.O.#:
	DRAWING NO. 1X6AA02-00496

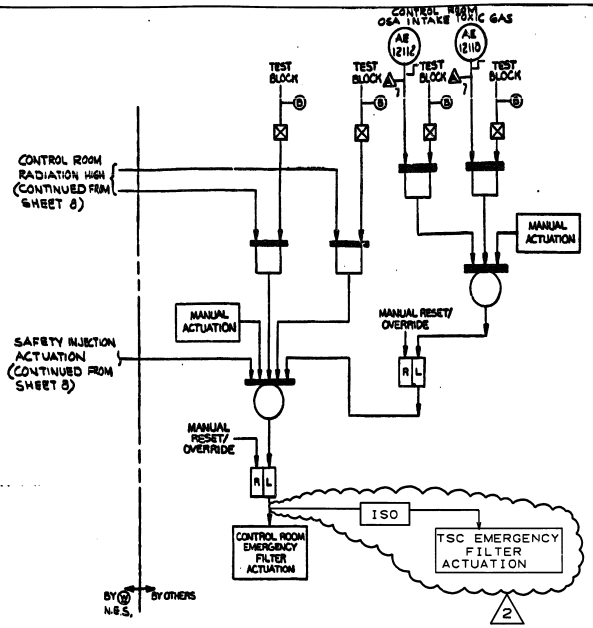

NO.	REVISIONS	DATE	DR	CHK
2	INCORPORATED ABN 9968	9-24-86	GS	

SCS REVISIONS

DOCUMENT STATUS CODE 1

1X6AA02-519-2

TOLERANCE & MACHINE NOTES (UNLESS OTHERWISE SPECIFIED)

WESTINGHOUSE PROPRIETARY DATA

THIS DOCUMENT CONTAINS PROPRIETARY INFORMATION OF THE WESTINGHOUSE ELECTRIC CORPORATION WATER REACTOR DIVISION. IT IS TRANSMITTED TO YOU IN CONFIDENCE AND TRUST, AND IS TO BE RETURNED UPON REQUEST. ITS CONTENTS MAY NOT BE DISCLOSED IN WHOLE OR IN PART TO OTHERS OR USED FOR OTHER THAN THE PURPOSE FOR WHICH TRANSMITTED WITHOUT THE PRIOR WRITTEN PERMISSION OF THE WESTINGHOUSE WATER REACTOR DIVISIONS.

Westinghouse Electric Corporation
WATER REACTOR DIVISIONS - MONROEVILLE, PA. U.S.A.

GEORGIA POWER COMPANY
ALVIN W. VOGTLE UNITS 1 & 2
FUNCTIONAL DIAGRAM (CONT. FROM SHT. 8)
SAFEGUARD ACTUATION SYSTEM

SIZE D | DWG NO. 7243D07 | REV. 1

CAD NAME
16A02519

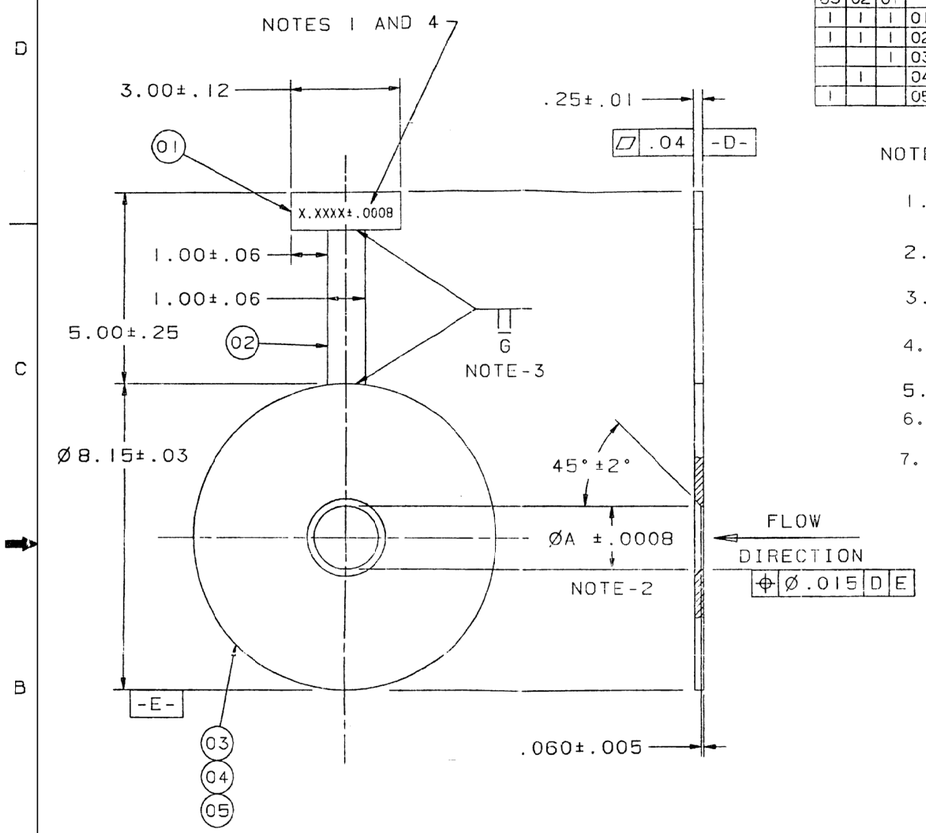

BILL OF MATERIAL

REQD 03	REQD 02	REQD 01	ITEM	NOTE	IDENT	PART NAME	(SIZE) REFERENCE INFORMATION	DEF	MATL SIZE CODE PART NUMBER OR REF DWG
1	1	1	01			NAME PLATE	ASME SA 240 304-316 SST.		
1	1	1	02			HANDLE	ASME SA 240 304-316 SST.		
		1	03			DISK	ASME SA 240 304-316 SST.		
	1		04			DISK	ASME SA 240 304-316 SST.		
1			05			DISK	ASME SA 240 304-316 SST.		

IDENT CLASS
GROUP NOTE

7.0

NOTES:

1. IDENTIFICATION CHARACTERS MAY BE STAMPED OR ETCHED APPROX. .25 HIGH.
2. INLET EDGE AT DIAMETER "A" MUST BE SQUARE, SHARP, AND FREE FROM BURRS, NICKS OR ROUNDING.
3. OTHER MEANS OF ATTACHMENT MAY BE USED PROVIDED PRIOR W APPROVAL IS GIVEN.
4. NAMEPLATE SHALL IDENTIFY ORIFICE SIZE, ØA, INCLUDING TOLERANCE, GRADE, SERIAL NUMBER, AND HEAT NUMBER. 7.0
5. WESTINGHOUSE SPIN NO. - CSORCP (GAE).
6. FOR GROUP B1,B2 AND B3 USE ITEMS 1,2 AND 5. THESE GROUPS MANUFACTURED ON SITE.
7. ORIFICE PLATE BORE DIAMETERS MUST BE CONSIDERED IN ORDER TO MEET PUMP PERFORMANCE REQUIREMENTS AND SYSTEM RESISTANCE CRITERIA PER TRM 13.5.1.

GROUP	A
01	1.5834
02	1.4995
03	1.7048
04	1.1456
05	1.1206
06	1.1738
B1	1.4136
B2	1.4435
B3	1.4770
B4	3.4380 W/O TAPER

INSTRUMENT TAG NUMBER	GROUP
FO 10118	B4
FO 10122	B1

SO. GAE-205
D. 305090-01
IT.
REVISION

TOLERANCE & MACHINE NOTES
(UNLESS OTHERWISE SPECIFIED)
DRAWING PRACTICES, GEOMETRIC SYMBOLS, DIMENSIONING, CLEARANCING & INTERPRETATION BASED ON ANSI Y14 SERIES STANDARD & PS 60400HA.
DIMENSIONS IN INCHES BASED ON 68°F(20°C)
RADIUS OR CHAMFER ALL EDGES----.005-.030
FILLET RADII----------.031-.01
ANGULARITY: CHAMFERS----------±2°
MAXIMUM SURFACE ROUGHNESS-250μIN. (√)AA
DWG. REF.
NEXT ASSY.
THIRD ANGLE PROJECTION

WESTINGHOUSE PROPRIETARY DATA
THIS DOCUMENT CONTAINS PROPRIETARY INFORMATION OF THE WESTINGHOUSE ELECTRIC CORPORATION WATER REACTOR DIVISION. IT IS TRANSMITTED TO YOU IN CONFIDENCE AND TRUST, AND IS TO BE RETURNED UPON REQUEST. ITS CONTENTS MAY NOT BE DISCLOSED IN WHOLE OR IN PART TO OTHERS OR USED FOR OTHER THAN THE PURPOSE FOR WHICH TRANSMITTED WITHOUT THE PRIOR WRITTEN PERMISSION OF THE WESTINGHOUSE WATER REACTOR DIVISIONS.

DFTM MILLSLAGLE 10-29-91
CHKR
DES ENG
MFG ENG
QA ENG
APP
APP
APP
APP
DFTG MGR 10-29-91

INTERACTIVE GRAPHICS
A-MILL-8251C26-01-001-102991

Westinghouse Electric Corporation
WATER REACTOR DIVISIONS - MONROEVILLE, PA. U.S.A.

TITLE
GAE CHARGING PUMP
FLAT PLATE ORIFICES
ORIFICE ASSEMBLY

DIMENSIONS IN INCHES
SIZE C
DWG NO. 8251C26
REV. 5
SCALE
WEIGHT LBS.
SHT 1 OF 1 SHTS

THIS DWG. IS REFERENCED IN VENDOR MANUAL: N/A
TAB/SECT. N/A
PAGE N/A
FIGURE N/A

VERSION 7.0 | DATE 01/13/14
REVISED BY SNC PER ABN-V03188, VER 1.0
SEE MICROFILM FOR PREVIOUS REV. SIGNATURES.

BY	CHK'D	APPR.1	APPR.2
DCP	ELC	JMR	

CAD MICROSTATION DCP/02
1X6AH02-30000.DGN

Southern Nuclear Operating Company, Inc.
FOR
VOGTLE ELECTRIC GENERATING PLANT
UNIT NO. 1

TITLE:
GAE CHARGING PUMP
FLAT PLATE ORIFICES
ORIFICE ASSEMBLY

VENDOR: WESTINGHOUSE
P.O.#: PAV-2
DRAWING NO. 1X6AH02-30000
SIZE D

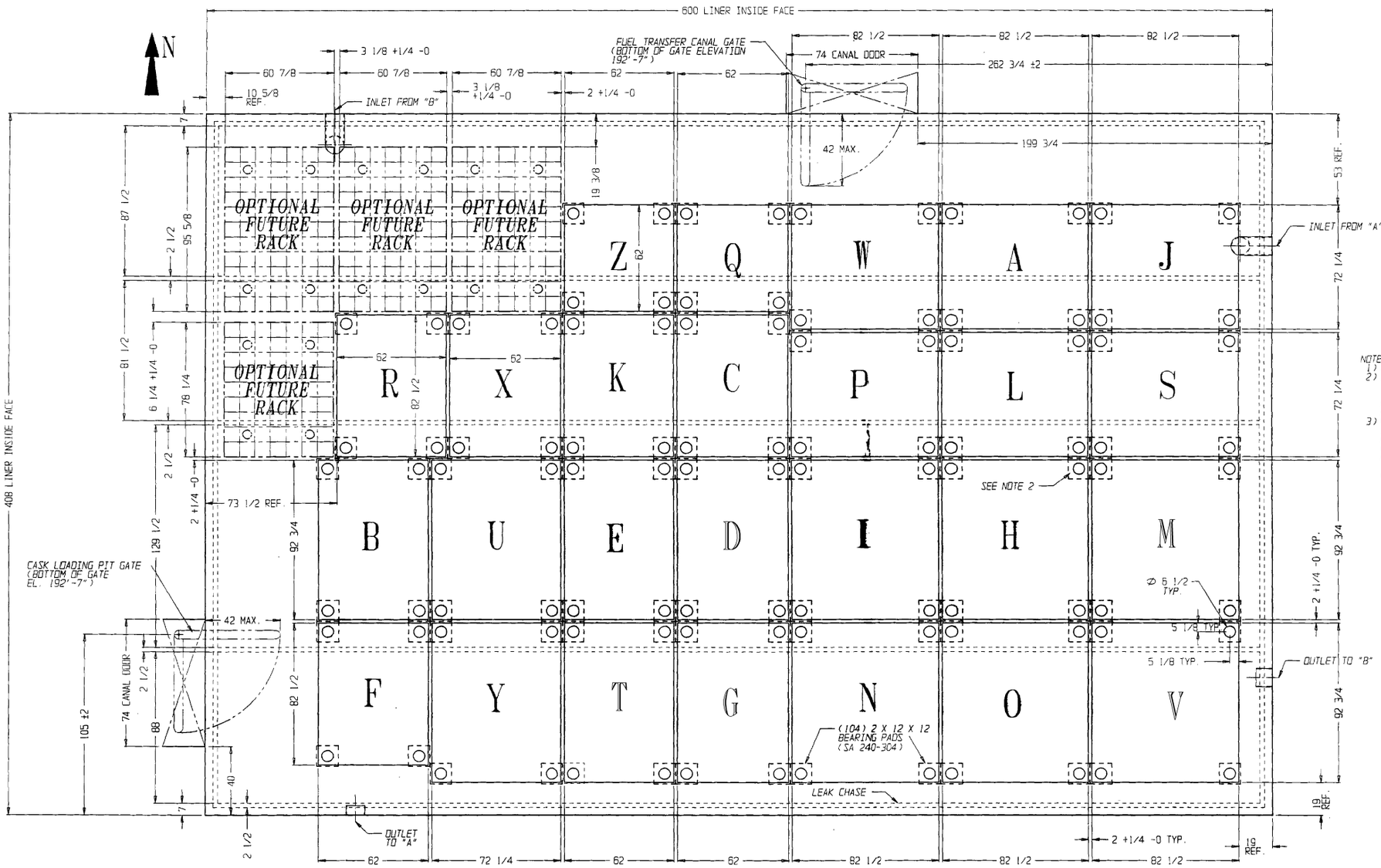

CONFIGURATION CHART

MODULE LETTER	MODULE SERIAL NUMBER	WEIGHT LBS. DRY	SIZE
Z	AD-32129-D-01	12,700	6 X 6
Q	AD-32129-D-02	12,700	6 X 6
W	AD-32132-D-01	17,550	7 X 8
A	AD-32132-D-02	17,550	7 X 8
J	AD-32132-D-03	17,550	7 X 8
R	AD-32130-D-01	16,900	6 X 8
X	AD-32130-D-02	16,900	6 X 8
K	AD-32130-D-03	16,900	6 X 8
C	AD-32130-D-04	16,900	6 X 8
P	AD-32132-D-04	17,550	7 X 8
L	AD-32132-D-05	19,600	7 X 8
S	AD-32132-D-06	19,600	7 X 8
B	AD-32131-D-01	17,100	6 X 9
U	AD-32133-D-01	19,750	7 X 9
E	AD-32131-D-02	17,100	6 X 9
T	AD-32131-D-03	19,050	6 X 9
I	AD-32134-D-01	22,400	8 X 9
H	AD-32134-D-02	22,400	8 X 9
V	AD-32134-D-03	22,400	8 X 9
F	AD-32130-D-05	16,900	6 X 8
Y	AD-32133-D-02	22,050	7 X 9
G	AD-32131-D-04	19,050	6 X 9
D	AD-32131-D-05	19,050	6 X 9
N	AD-32134-D-04	22,400	8 X 9
O	AD-32134-D-05	22,400	8 X 9
M	AD-32134-D-06	25,075	8 X 9

NOTES:
1) ALL DIMENSIONS ARE IN INCHES, UNLESS NOTED.
2) INSTALLER MAY USE SINGLE LARGE BEARING PAD AT A TWO, THREE OR FOUR RACK PEDESTAL INTERSECTION AS OPPOSED TO SEPARATE 12" SQUARE BEARING PADS AS LONG AS THE DISTANCE FROM THE EDGE OF A RACK PEDESTAL TO THE EDGE OF THE BEARING PAD IS A MINIMUM OF 2 1/2".
3) RACK MODULE LOCATION IS SIZE DEPENDENT. RACKS OF THE SAME SIZE CAN BE SUBSTITUTED EVEN THOUGH THEY HAVE DIFFERENT WEIGHTS AS LONG AS THE WEIGHT DIFFERENCE DOES NOT EXCEED 3% OF THE WEIGHT OF THE LIGHTEST RACK WITH ALL LOCATIONS FILLED WITH FUEL. FOR EXAMPLE, ALTHOUGH RACK "M" IS SHOWN ON THE SOUTHEAST CORNER, ANY OF THE 8X9 RACKS (I,H,V,N,O, OR M) MAY BE PLACED IN THIS CORNER POSITION.

REVISIONS

REV	DESCRIPTION	PREP	CHECKED	ENGINEERING	D.A.
0	ISSUED FOR APPROVAL	K. SHAW 4-15-97	K. TAYLOR 4-15-97	C. BALLARD 4-15-97	V. DUFFY 4-15-97
1	REV'D AS SHOWN	K. SHAW 5-19-97	K. TAYLOR 5-19-97	C. BALLARD 5-19-97	K. MOORE 5-19-97
2	ADD TOLERANCE & CHANGE RACK I.D.	K. SHAW 7-8-97	K. TAYLOR 7/8/97	C. BALLARD 7/8/97	K. MOORE 7/8/97

THIS DRAWING IS AN INTELLECTUAL PROPERTY OF HOLTEC INTERNATIONAL. IT IS PROVIDED TO THE RECIPIENT UNDER THE EXPLICIT CONDITION THAT IT WILL NOT BE DUPLICATED IN WHOLE, IN PART, OR GIVEN TO OTHERS WITHOUT WRITTEN CONSENT OF HOLTEC INTERNATIONAL.

HOLTEC INTERNATIONAL

EQUIPMENT DESIGN
ANALYSIS
CONSULTING

DESCRIPTION:
UNIT #1 SPENT FUEL POOL-
SPENT FUEL RACK LAYOUT

CLIENT:
SOUTHERN NUCLEAR
ALVIN W. VOGTLE NUCLEAR PLANT

COMPANION DRAWINGS: NONE

SHEET NO. SHEET 1 OF 1

PROJECT No.: 70241
SCALE: 1/32 = 1
DRAWING No.: 1945
REV.: 6
P.O. No.: 70290170000

SIZE D
CAD NAME 16N10B66

NO.	REVISIONS	DATE	DR	CHK	APPV
6	INCORPORATED PER DCP 97-V1N0001 (CHANGE STATUS FROM P TO 1)	2-16-99	ELC	EOG	GLB

SCS REVISIONS

1X6AN10B-00066-3

DOCUMENT STATUS CODE 1

| INDEX | | |

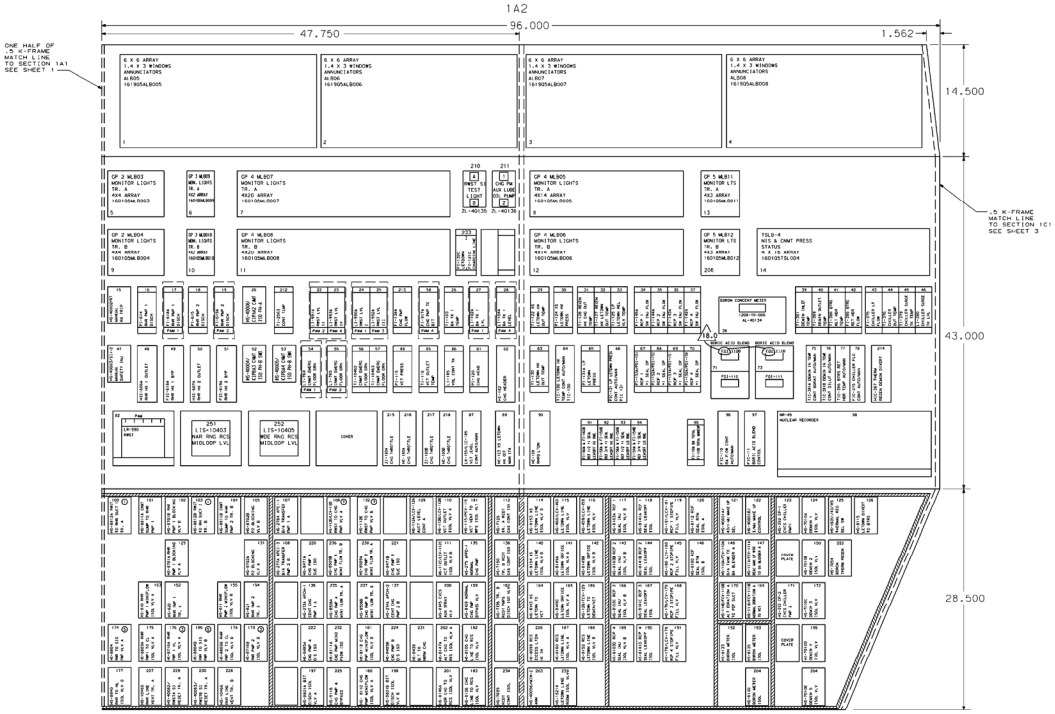

PANEL SECTION LOCATION PLAN

NOTE:

FOR LOCATION OF CUTOUTS AND PANEL STIFFENERS SEE W DWG 1548E98 SH. 2

WESTINGHOUSE PROPRIETARY DATA

THIS DOCUMENT CONTAINS PROPRIETARY INFORMATION OF THE WESTINGHOUSE ELECTRIC CORPORATION WATER REACTOR DIVISION. IT IS TO BE MAINTAINED IN CONFIDENCE BY YOU AND THEIRS. THE INFORMATION HEREIN WHICH CONSTITUTES THE CONTENTS MAY NOT BE DISCLOSED TO WHOLE OR IN PART TO ANY OTHER PERSON OR ENTITY WITHOUT PRIOR WRITTEN PERMISSION TRANSMITTED BY THE WATER REACTOR DIVISION OF THE WESTINGHOUSE ELECTRIC CORPORATION.

WESTINGHOUSE ELECTRIC CORPORATION
NUCLEAR ENERGY SYSTEMS, PGH., PA., U.S.A.

TITLE: GEORGIA POWER COMPANY
ALVIN VOGTLE UNIT 1
MAIN CONTROL BOARD FRONT VIEW
SECTION 1A2

SCALE: 1451E70
DIMENSIONS IN INCHES: SHEET 2
DO NOT SCALE: SUB: 1.7
1 SIZE E

THIS DWG. IS REFERENCED IN VENDOR MANUAL: N/A
TAB/SECT. N/A
PAGE N/A
FIGURE N/A

VERSION 18.0 | DATE 02/10/95

REVISED BY SNC PER ABV 1062047701E003, VER. 1.0
SEE MICROFILM FOR PREVIOUS VER. SIGNATURES.

BY	CHK'D	APPR.1	APPR.2
TSL	RBH	JMR	

MICROSTATION TSL/01 1X6AV02-00376.DGN

Southern Nuclear Operating Company, Inc.
FOR
VOGTLE ELECTRIC GENERATING PLANT
UNIT NO. 1

TITLE:
MAIN CONTROL BOARD
FRONT VIEW
SECTION 1A2

DRAWN BY: WESTINGHOUSE ELEC | P.O. #:

DRAWING NO. 1X6AV02-00047

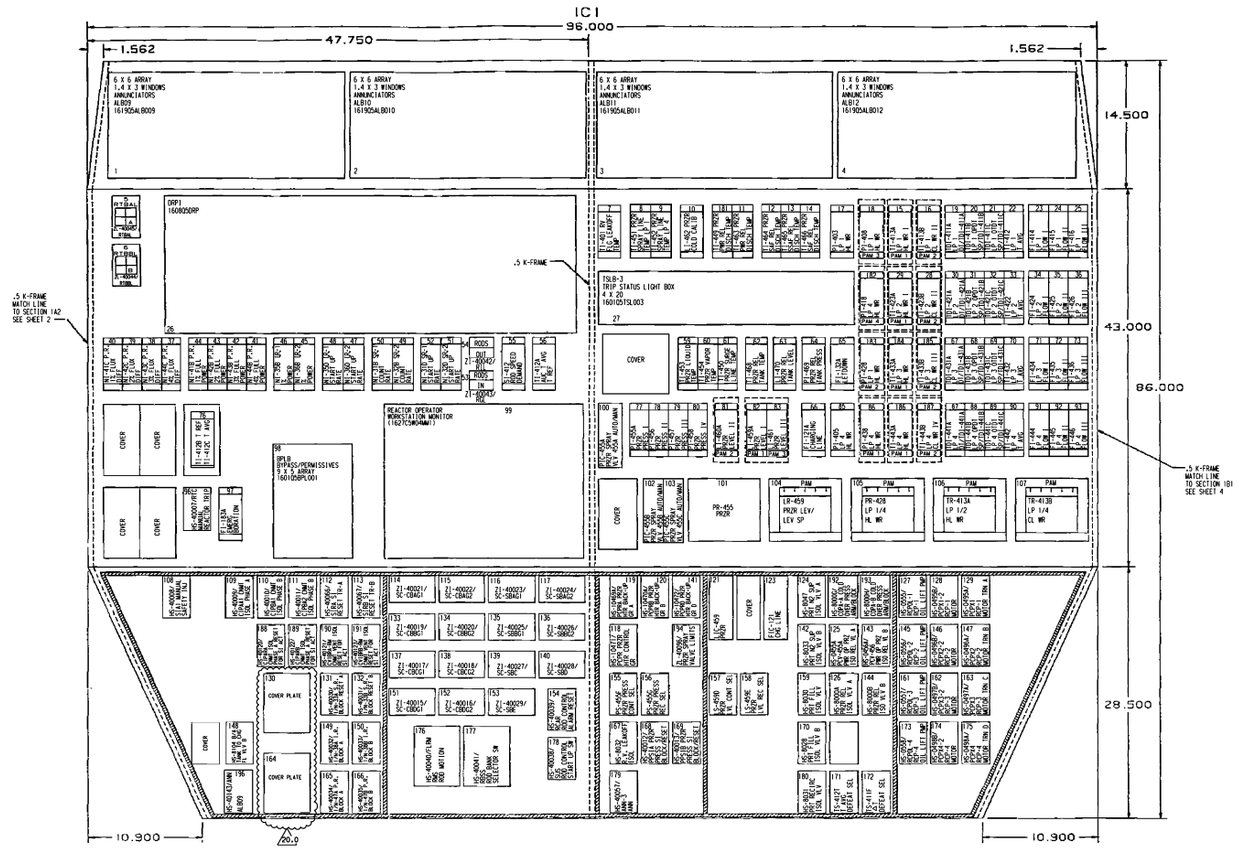

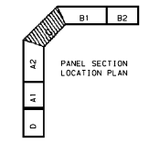

NOTE:

FOR LOCATION OF CUTOUTS AND PANEL STIFFENERS
SEE ⓦ DWG 1548E98 SH.3

WESTINGHOUSE PROPRIETARY DATA

THIS DOCUMENT CONTAINS PROPRIETARY INFORMATION OF THE WESTINGHOUSE ELECTRIC CORPORATION WATER REACTOR DIVISIONS. IT IS TRANSMITTED TO YOU IN CONFIDENCE AND TRUST, AND YOU AGREE TO TREAT THE INFORMATION CONTAINED HEREIN AS PROPRIETARY, TO GIVE IT ADEQUATE PROTECTION, AND TO NOT REPRODUCE OR TRANSMIT IT TO ANYONE OUTSIDE YOUR ORGANIZATION, IN WHOLE OR IN PART, WITHOUT THE WRITTEN PERMISSION OF THE WESTINGHOUSE WATER REACTOR DIVISIONS.

DWN	M. DELLAS	8-19-79	
CHKD		8-19-79	
DES ENG		8-19-79	
APP ENG			
APP		8-19-79	
APP			
APP		8-19-79	

EQUIPMENT TAG NO.: 1-1601-05-MCB

WESTINGHOUSE ELECTRIC CORPORATION
NUCLEAR ENERGY SYSTEMS, PGH, PA., U.S.A.

TITLE: GEORGIA POWER COMPANY
ALVIN. VOGTLE UNIT 1
MAIN CONTROL BOARD FRONT VIEW
SECTION 1C1

SCALE: DIMENSIONS IN INCHES DO NOT SCALE

1451E70
SHEET 3
SUB 18

THIS DWG. IS REFERENCED IN VENDOR MANUAL: N/A			
TAB-SECT. N/A			
PAGE N/A			
FIGURE N/A			
VERSION 20.0	DATE 08/21/09		
REVISED BY SNC PER ABN 1052592101J034, VER.1.0 SEE MICROFILM FOR PREVIOUS VER. SIGNATURES.			
BY	CHK'D	APPR.1	APPR.2
TSL	ELC	JMR	X

CAD MICROSTATION TSL/01 1X6AV02-00048.DGN

Southern Nuclear Operating Company, Inc.
FOR
VOGTLE ELECTRIC GENERATING PLANT
UNIT NO. 1

TITLE:
MAIN CONTROL BOARD
1-1601-05-MCB
FRONT VIEW - SECTION 1C1

VENDOR: WESTINGHOUSE P.O.#: PAV-2

DRAWING NO. 1X6AV02-00048

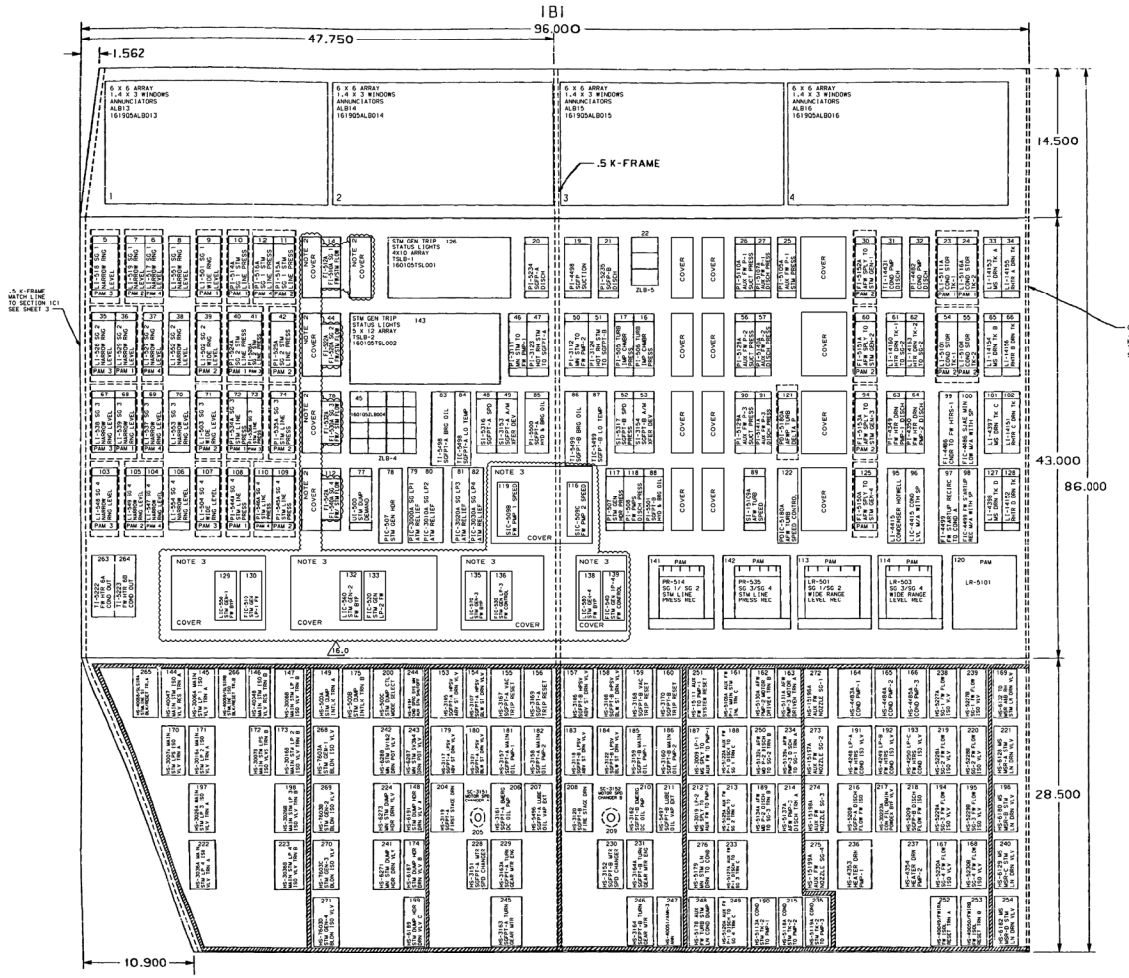

NOTE:

1. FOR LOCATION OF CUTOUTS AND PANEL STIFFENERS SEE W DWG 1046E76 SH. 4.
2. SEE AX5ABD1-00001 FOR COVER PLATE DETAILS.
3. SEE AX5ABD1-00008 FOR COVER PLATE DETAILS.

16.0

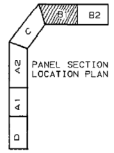

SECTION 1B1

WESTINGHOUSE PROPRIETARY DATA

THIS DOCUMENT CONTAINS PROPRIETARY INFORMATION OF THE WESTINGHOUSE ELECTRIC CORPORATION WATER REACTOR DIVISIONS. IT IS DISCLOSED IN CONFIDENCE AND TRUST, AND IT IS TO BE RETURNED UPON REQUEST. ITS CONTENTS MAY NOT BE DISCLOSED IN WHOLE OR IN PART TO OTHERS OR USED FOR OTHER THAN THE PURPOSE FOR WHICH TRANSMITTED WITHOUT THE PRIOR WRITTEN PERMISSION OF THE WESTINGHOUSE WATER REACTOR DIVISIONS.

D.ELC.SMOO.1451E70.XXX.11.004.011987

SIZE	FSCM. NO.	DWG. NO.	REV.
E		1451E70	11
SCALE	DFTM. -	SHT. 4 OF	SHTS.

1	1	1	1	1
5	5	5	5	5
1	1	1	1	1
1	1	1	1	1
1	1	1	1	1

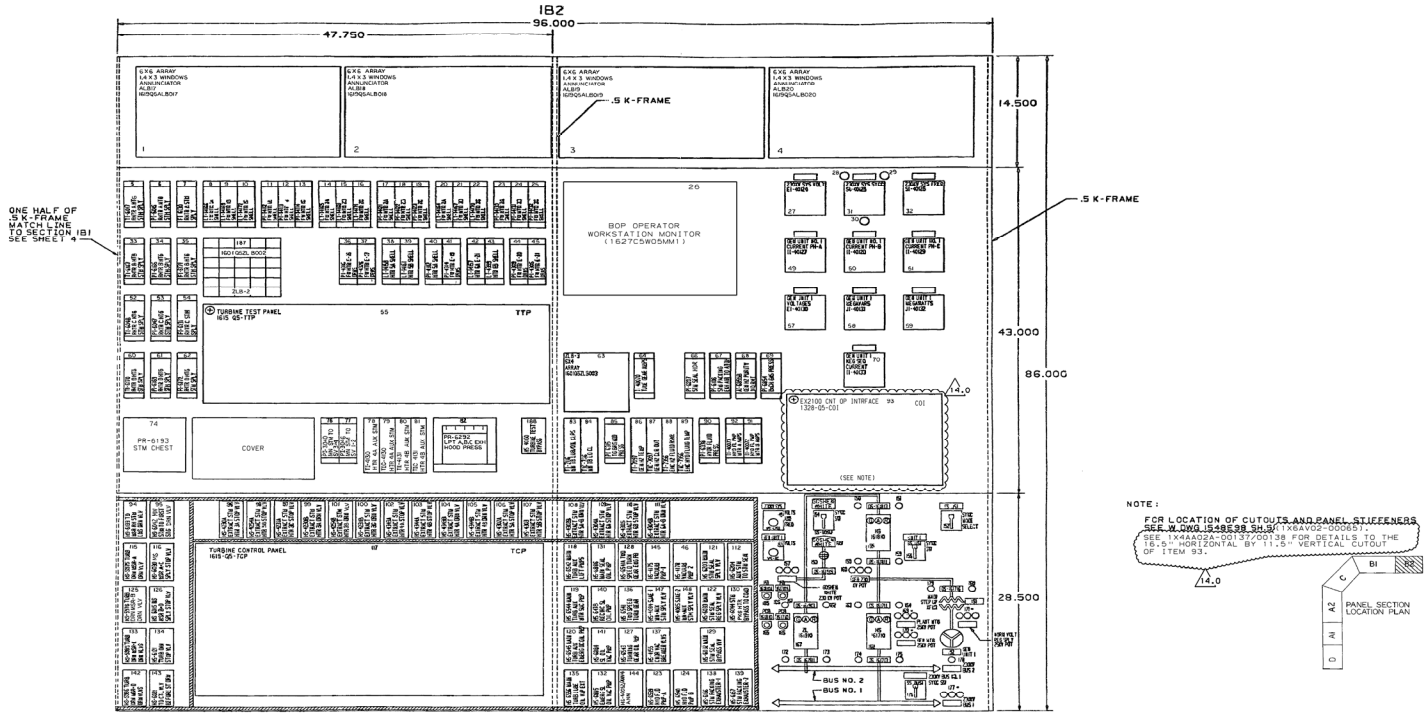

INTERACTIVE GRAPHICS
D.ELC.JOHN.145E70.XXX.09.005.032589

NO.	SOUTHERN COMPANY SERVICES REVISIONS	DATE	DR.	CHK	DM
	REV. TO CLOSE DCN 1 (DCN-S #5, CCP NO.- F-0005 W/o. NO DWG CHANGE REQD.	08APR	CIB	JM	JJ
	SEE MICROFILM FOR PREVIOUS REVS.				

SOUTHERN COMPANY SERVICES
BIRMINGHAM, ALABAMA

DRAWING NUMBER: 1X6AV02-50
REV.: 11

WESTINGHOUSE PROPRIETARY DATA
THIS DOCUMENT CONTAINS PROPRIETARY INFORMATION OF WESTINGHOUSE ELECTRIC CORPORATION. IT IS TRANSMITTED TO YOU IN CONFIDENCE AND TRUST, AND YOU AGREE TO TREAT THE INFORMATION IN ACCORDANCE WITH THE TERMS OF THE AGREEMENT UNDER WHICH IT IS FURNISHED TO YOU OR YOUR COMPANY OR ORGANIZATION. YOU AGREE TO MAKE THIS DOCUMENT AND INFORMATION AVAILABLE ONLY TO PERSONS WHO HAVE A NEED TO KNOW THE INFORMATION, AND WHO ARE BOUND TO KEEP IT CONFIDENTIAL AND TO USE IT ONLY FOR THE WESTINGHOUSE EXPRESS OBJECTIVES DESCRIBED.

DRAWN	H. BELLAS	5-1-79
DESIGN		5-1-79
DR. MGR.		
DFS ENG		
DESIGN		5-1-79
DFS MGR		
DFS ENG		5-1-79

WESTINGHOUSE ELECTRIC CORPORATION
NUCLEAR ENERGY SYSTEMS, P.O. PA. U.S.A.
PLANT GEORGIA POWER COMPANY
ALVIN VOGTLE UNIT 1
MAIN CONTROL BOARD FRONT VIEW
SECTION 1B2

145IE70
SHEET 9

SCALE: -
DIMENSIONS IN INCHES
NO MAP SCALE

CAD NAME
16AV0250

GEORGIA POWER COMPANY
PLANT: VOGTLE ELECTRIC GENERATING PLANT
UNIT: 1 ITEM-19
STATUS: APPROVED FIELD MODIFICATION
CERTIFICATION LTR. NO. GP-14412
AUTHORITY: J.L. TAIN
ENGR. LTR. NO. ER/SA-54758

DWG. NO.	DESCRIPTION
1	FIELD CHANGE
2	REVISED PER ECN 4633
3	REVISED PER ECN 4636

CAD
MICROSTATION

THIS DWG. IS REFERENCED IN VENDOR MANUAL: N/A
TAB/SECT. N/A
PAGE N/A
FIGURE N/A

Southern Nuclear Operating Company, Inc.
FOR
VOGTLE ELECTRIC GENERATING PLANT
UNIT NO.1

VERSION 14.0 DATE 8/31/09
REVISED BY SNC PER ABN 1049001501J018, V. 1.0
SEE MICROFILM FOR PREVIOUS VER. SIGNATURES.

TITLE:
MAIN CONTROL BOARD
FRONT VIEW SECTION 1B2

BY	CHK'D	APPR.1	APPR.2
RBH	MWD	JMR	

VENDOR: WESTINGHOUSE
P.O.#:
DRAWING NO. 1X6AV02-00050

...\Bob\1X6AV02-00050.dgn 8/29/2009 1:11:07 PM

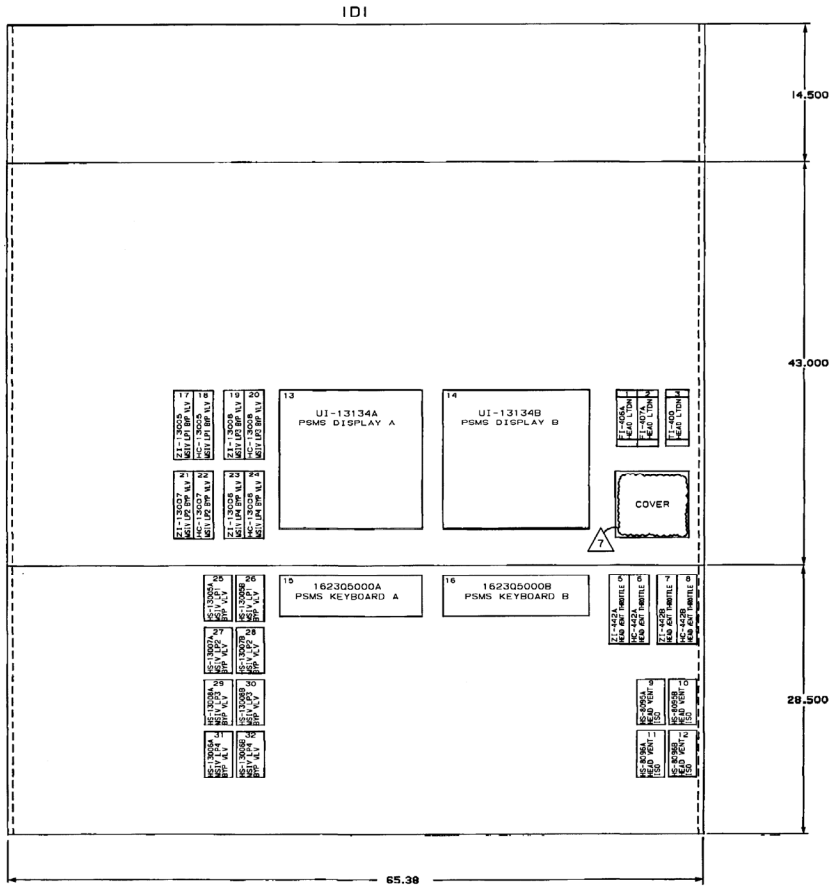

NOTE:

FOR LOCATION OF CUTOUTS AND PANEL STIFFENERS SEE W DWG 1548E98 SH.8

NO.	REVISIONS	DATE	DR	CHK
7	INCORPORATED PER DCP 94-V1N0013	8/15/96	JGM	

SCS REVISIONS

DOCUMENT STATUS CODE 1

1X6AV02-60-8

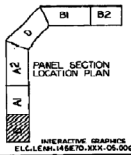

INTERACTIVE GRAPHICS
ELC.LEAH.145E70.XXX-05.00G.062894

NO.	SOUTHERN COMPANY SERVICES REVISIONS	DATE	DR.	CHK.	DR
7	REV. TO CLOSE DCN'S (EDN-8-93), DCN 2 (EDN-8-93). NO DWG. CHANGE REQD. SEE MICROFILM FOR PREVIOUS REVS.	8-8-94	C.L.A.	S.W.	22

SOUTHERN COMPANY SERVICES
BIRMINGHAM, ALABAMA

DRAWING NUMBER 1X6AV02-60 REV. 7

J. GERBER

WESTINGHOUSE ELECTRIC CORPORATION
NUCLEAR ENERGY SYSTEMS, PGH. PA. U.S.A.

GEORGIA POWER COMPANY
ALVIN W. VOGTLE NUCLEAR PLANT
MAIN CONTROL BOARD FRONT VIEW
SECTION 10

1451E70
SHEET 6

CAD NAME
16AV0260

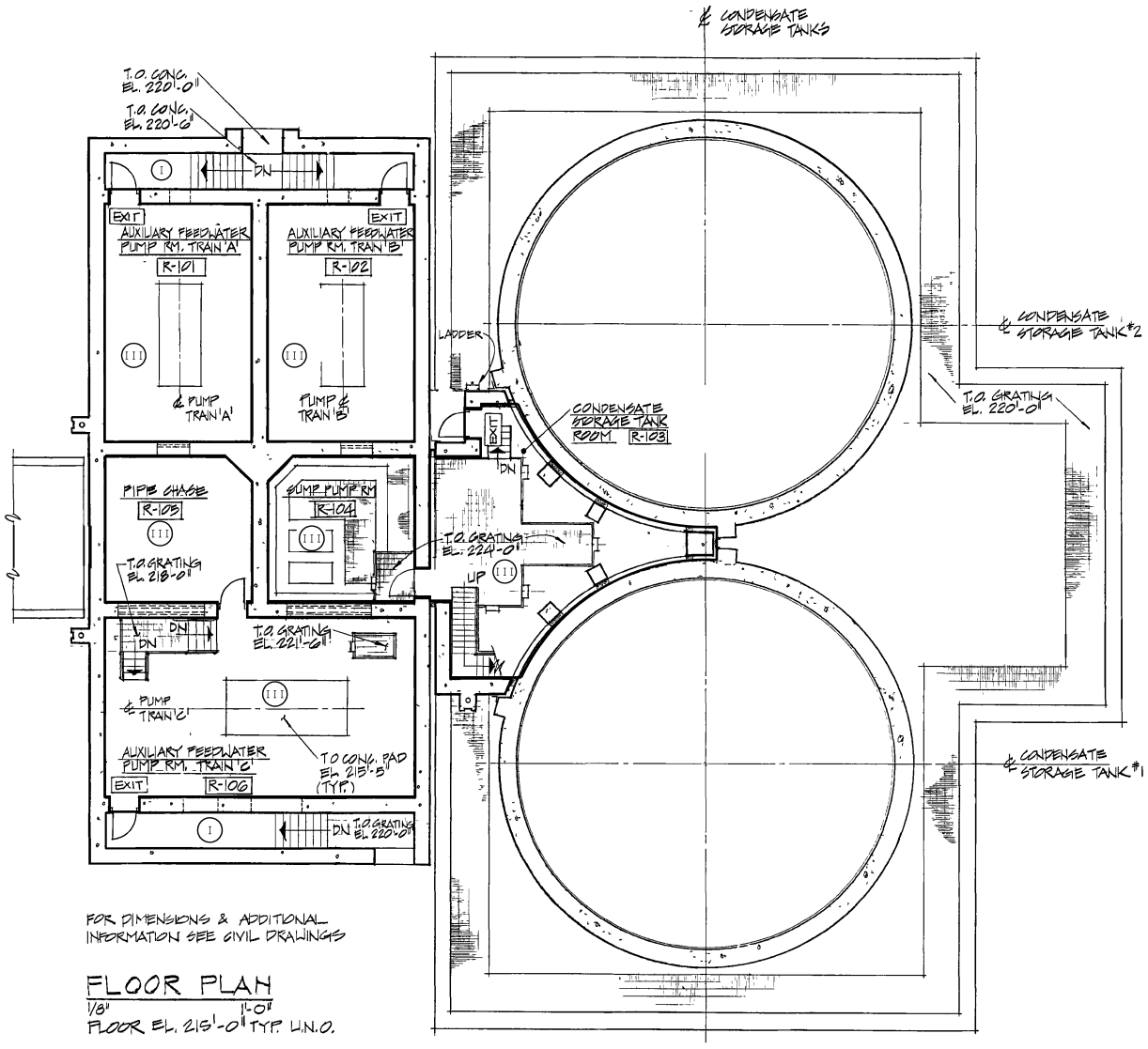

FOR DIMENSIONS & ADDITIONAL INFORMATION SEE CIVIL DRAWINGS

FLOOR PLAN

1/8" 1'-0"

FLOOR EL. 215'-0" TYP. U.N.O.

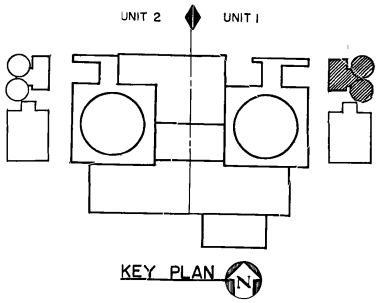

RAD ZONE MAP POST TMI 24 HOURS	
ZONE	REM/H
I	< 0.0025
II	0.0025-0.1
III	0.1-1.0
IV	1.0-10.0
V	10.0-100
VI	100-1000
VII	1000-10000
VIII	>10000
———	ZONE BOUNDARY

SOUTHERN COMPANY SERVICES, INC.
BIRMINGHAM, ALABAMA

GEORGIA POWER COMPANY
ALVIN W. VOGTLE NUCLEAR PLANT

RAD ZONE MAP POST TMI 24 HOURS
AUXILIARY FEEDWATER
PUMP HOUSE FLOOR PLAN

SCALE: NONE | DRAWING NO. 1X6DD101 | REV. 0

JOB NO. 10604

SIZE E 34X44

CAD NAME 1X6DD101

THIS DOCUMENT CONTAINS PROPRIETARY, CONFIDENTIAL, AND/OR TRADE SECRET INFORMATION OF THE SUBSIDIARIES OF THE SOUTHERN COMPANY OR OF THIRD PARTIES. IT IS INTENDED FOR USE ONLY BY EMPLOYEES OF, OR AUTHORIZED CONTRACTORS OF, THE SUBSIDIARIES OF THE SOUTHERN COMPANY. UNAUTHORIZED POSSESSION, USE, DISTRIBUTION, COPYING, DISSEMINATION, OR DISCLOSURE OF ANY PORTION HEREOF IS PROHIBITED.

NO.	REVISIONS	DATE	DR	CHK	APPV	DTL
△						
△						
△						
4	ISSUED PER REA 96-VAA054	7-28-98	LVL	RBH	CBH	WFP

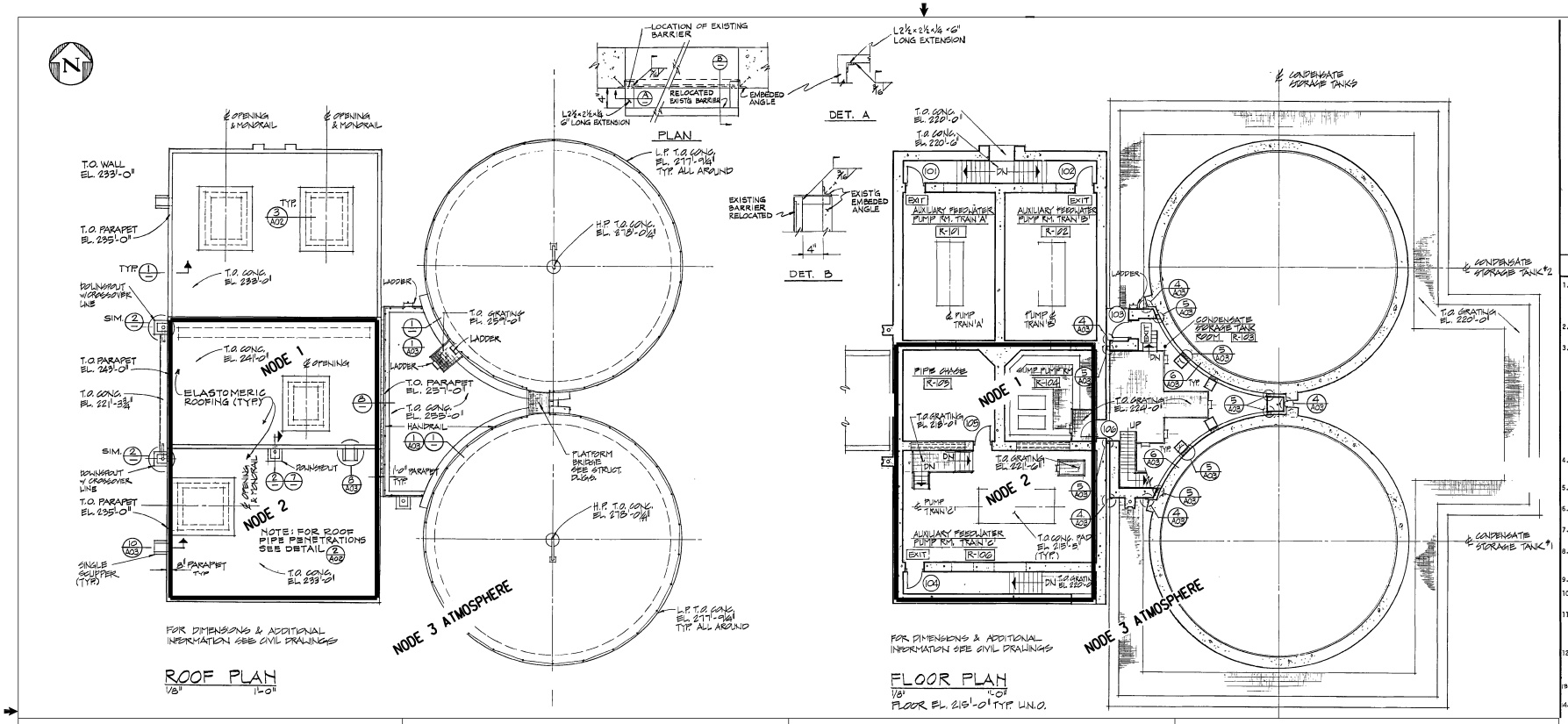

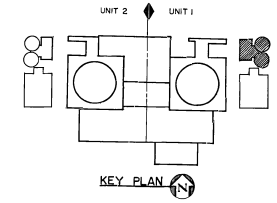

GENERAL NOTES

1. DIMENSIONS:
   - REFER TO STRUCTURAL DRAWINGS FOR DIMENSIONS NOT SHOWN IN ARCHITECTURAL DRAWINGS.
   - ALL DIMENSIONS SHALL HAVE PREFERENCE OVER SCALE.
   - ALL DIMENSIONS SHALL BE VERIFIED IN THE FIELD BEFORE PROCEEDING WITH THE WORK.
2. PROVIDE ALL NECESSARY BLOCKING, BACKING FRAMING FOR HOSE CABINETS, WALL MOUNTED AND RECESSED CABINETS, FIXTURES, ELECTRICAL CABINETS AND ALL OTHER ITEMS REQUIRING SAME.
3. ALL CONSTRUCTION SHALL COMPLY WITH THE "NATIONAL FIRE CODES", 1977 EDITION.
   - BUILDING STRUCTURE FIRE PROTECTION.
   A. ALL BEARING WALLS OR BEARING PORTIONS OF WALLS SHALL HAVE 3 HOUR FIRE RESISTIVE CONSTRUCTION.
   B. ALL PRINCIPAL SUPPORTING MEMBERS INCLUDING COLUMNS, TRUSSES, GIRDERS AND BEAMS SHALL HAVE FIRE-RESISTANCE RATING AS FOLLOWS:
      - 2 HOUR FOR ONE FLOOR OR ROOF ONLY
      - 3 HOUR FOR MORE THAN ONE FLOOR OR ROOF.
   C. ALL SECONDARY FLOOR SUPPORTING MEMBERS - BEAMS, SLABS, JOIST, NOT AFFECTING THE STABILITY OF THE BUILDING SHALL HAVE 2 HOUR FIRE-RESISTANCE RATING.
   D. ALL SECONDARY ROOF SUPPORTING MEMBERS - BEAMS, PURLINS, SLABS NOT AFFECTING THE STABILITY OF THE BUILDING SHALL HAVE 1-1/2 HOUR FIRE-RESISTANCE RATING.
   E. FOR TYPE AND MATERIAL REFER TO DETAIL DRAWINGS AND SPECIFICATION.
4. - FIRE RESISTIVE CONSTRUCTION:
   A. INSTALL FIRE DAMPERS ON DUCTS PASSING THROUGH FIRE RATED WALLS.
   B. ALL FIRE RATED WALLS SHALL EXTEND TO THE UNDERSIDE OF THE STRUCTURE ABOVE, UNLESS NOTED OTHERWISE.
5. ALL EGRESS EXITS SHALL BE OPENABLE FROM THE INSIDE WITHOUT THE USE OF KEY, SPECIAL EFFORT OR KNOWLEDGE. EXIT SHALL BE PROVIDED WITH ILLUMINATED EXIT SIGNS - SEE FLOOR PLANS FOR LOCATION.
6. ALL CABINETS, ELECTRIC PANELS, ETC. RECESSED INTO FIRE RATED WALLS SHALL BE BACKED WITH FIRE RATED CONSTRUCTION TO MATCH THE WALL FIRE RATING.
7. CROSS CHECK ALL DETAILS AND DIMENSIONS SHOWN IN ;HE ARCHITECTURAL DRAWINGS WITH RELATED REQUIREMENTS ON THE STRUCTURAL, MECHANICAL ELECTRICAL, CIVIL AND/OR CONTROL DRAWINGS.
8. FLOOR AND WALL OPENINGS, SLEEVES, VARIATIONS IN THE STRUCTURAL SLAB ELEVATIONS, DEPRESSED AREAS, AND ALL OTHER CONTROL, MECHANICAL, ELECTRICAL AND/OR STRUCTURAL REQUIREMENTS, MUST BE COORDINATED BEFORE PROCEEDING WITH CONSTRUCTION.
9. DETAILS MARKED "TYPICAL" SHALL APPLY IN ALL SIMILAR CASES UNLESS SPECIFICALLY INDICATED OTHERWISE.
10. WHERE NO SPECIFIC DETAIL IS SHOWN, THE FRAMING OR CONSTRUCTION SHALL BE IDENTICAL OR SIMILAR TO THAT INDICATED FOR LIKE CASES OF CONSTRUCTION.
11. THE PRECISE DEMENSIONS AND LOCATIONS OF ALL LADDERS, EQUIPMENT AND ACCESS HATCHES, SUMPS, EQUIPMENT AND FLOOR DRAINS SHALL BE DETERMINED FROM THE STRUCTURAL, MECHANICAL, ELECTRICAL, AND CONTROL DRAWINGS, AND BE VERIFIED FROM VENDOR SHOP DRAWINGS, EQUIPMENT DATA ETC. AS REQUIRED.
12. SIZES OF MECHANICAL EQUIPMENT ROOM PADS, AND BASES ARE APPROXIMATE ONLY. CONTRACTOR SHALL VERIFY DIMENSIONS OF ALL CONCRETE PADS AND BASES WITH EQUIPMENT MANUFACTURER'S SHOP DRAWINGS.
13. ALL BEARING WALLS OR BEARING PORTIONS OF WALLS SHALL HAVE 2 OR 3 HOUR FIRE RESISTIVE CONSTRUCTION. SEE FIRE PROTECTION DWGS.
14. ALL CONCRETE ROOF SURFACES SHALL RECEIVE ELASTOMERIC ROOFING MATERIAL.
15. EXPOSED CONCRETE SURFACES OF THE TANK CEILING ARE TO RECEIVE FC-13 COATING SYSTEM.

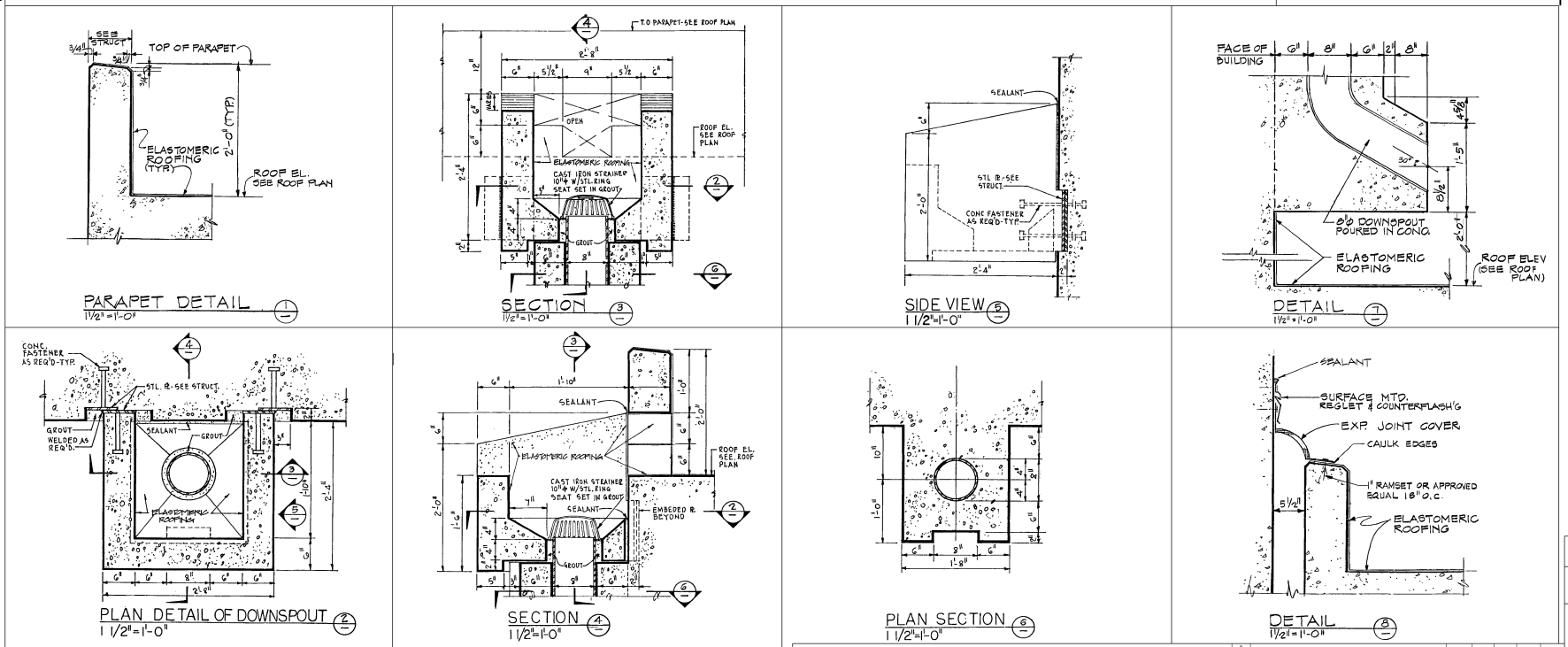

SOUTHERN COMPANY SERVICES, INC.
BIRMINGHAM, ALABAMA

GEORGIA POWER COMPANY
ALVIN W. VOGTLE NUCLEAR PLANT

NODAL BOUNDARY
AUXILIARY FEEDWATER PUMP HOUSE AREA

THIS DOCUMENT CONTAINS PROPRIETARY, CONFIDENTIAL, AND/OR TRADE SECRET INFORMATION OF THE SUBSIDIARIES OF THE SOUTHERN COMPANY OR OF THIRD PARTIES. IT IS INTENDED FOR USE ONLY BY EMPLOYEES OF, OR AUTHORIZED CONTRACTORS OF, THE SUBSIDIARIES OF THE SOUTHERN COMPANY. UNAUTHORIZED POSSESSION, USE, DISTRIBUTION, COPYING, DISSEMINATION, OR DISCLOSURE OF ANY PORTION HEREOF IS PROHIBITED.

NO.	REVISIONS	DATE	DR	CHK	APPV	DTL
3						
2						
1	REVISED PER REA 96-VAA054	10-1-98	GS	RBH	CBH	
0	ISSUED PER REA 96-VAA054	SEE MICROFILM FOR SIGNATURES				

SCALE: 1/8" = 1'-0"

JOB NO. 10604

DRAWING NO. 1X6DD300

REV. 1

SIZE E 34x44

CAD NAME 1X6DD300

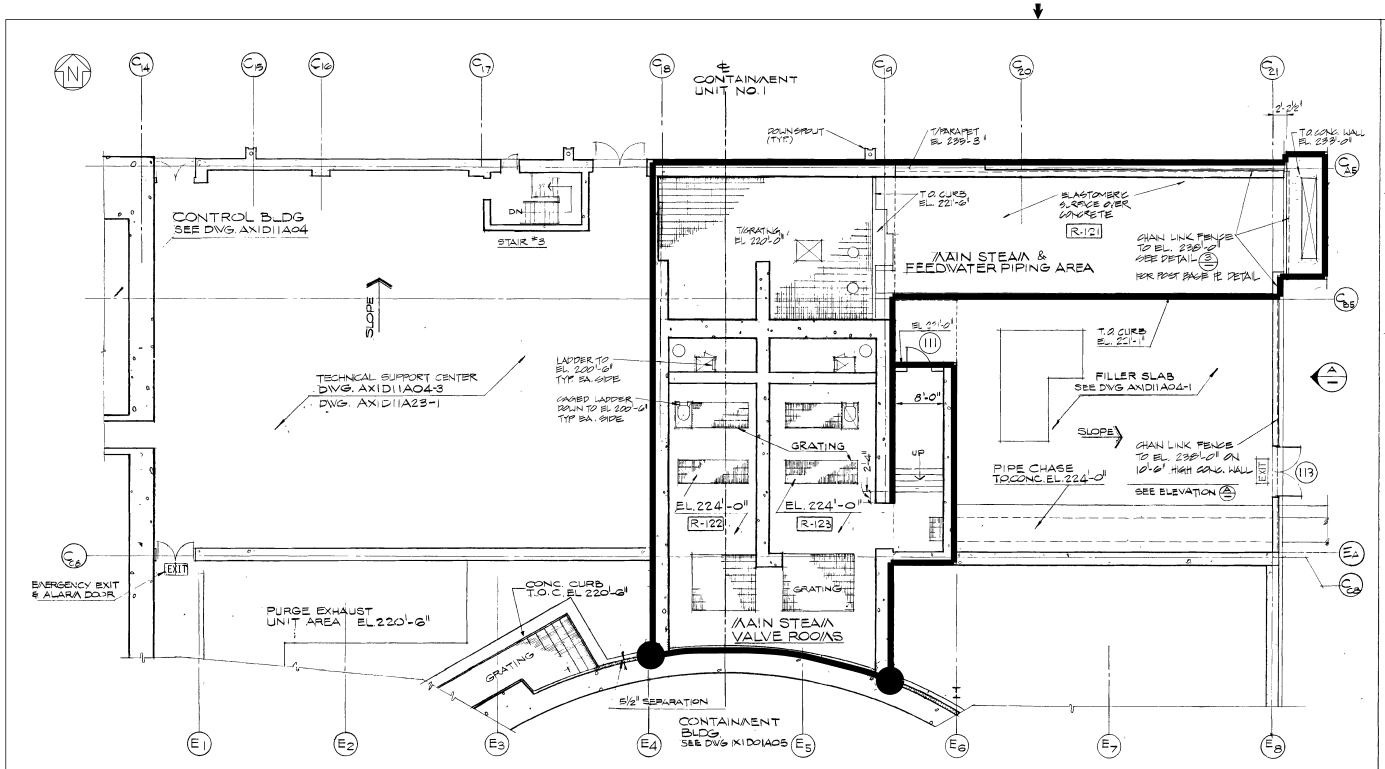

MAIN STEAM VALVE AREA
PARTIAL FLOOR PLAN EL.220'-0"

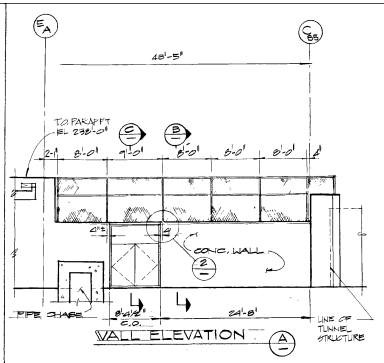

WALL ELEVATION A

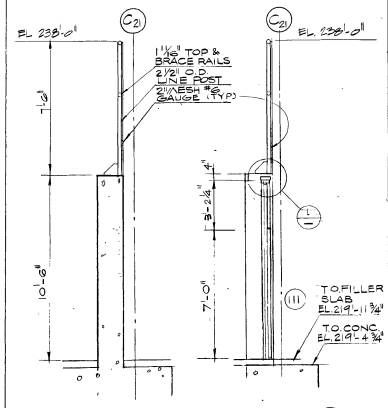

SECTION B SECTION C

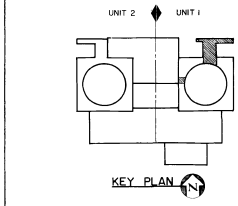

NOTES

FOR GENERAL NOTES SEE DWG. 1X1D01A01-1

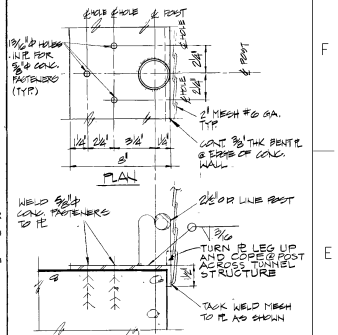

POST DETAIL @ BASE PL 3

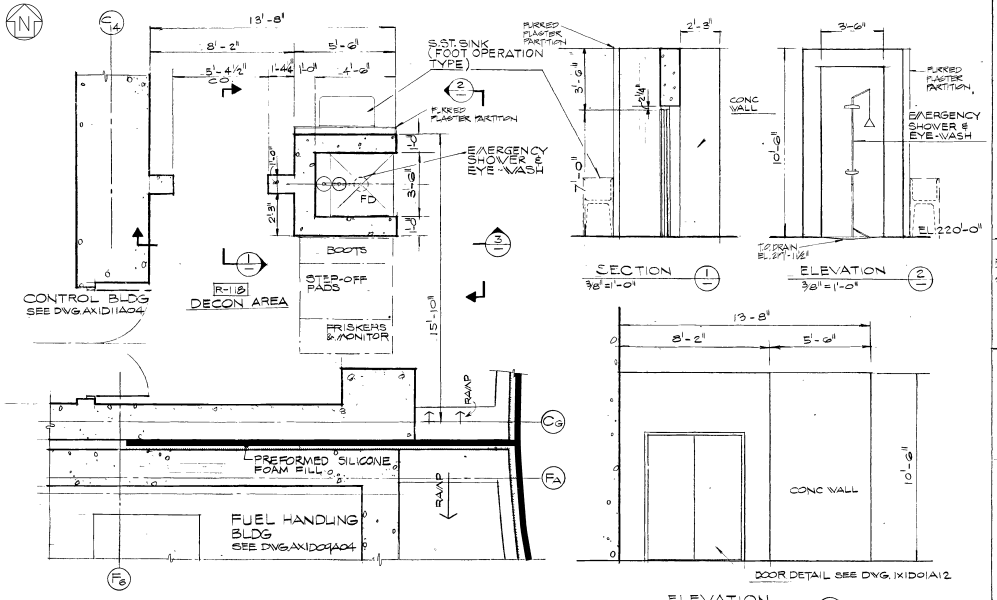

DECON. AREA
PARTIAL FLOOR PLAN EL.220'-0"

SECTION 1 ELEVATION 2 ELEVATION 3

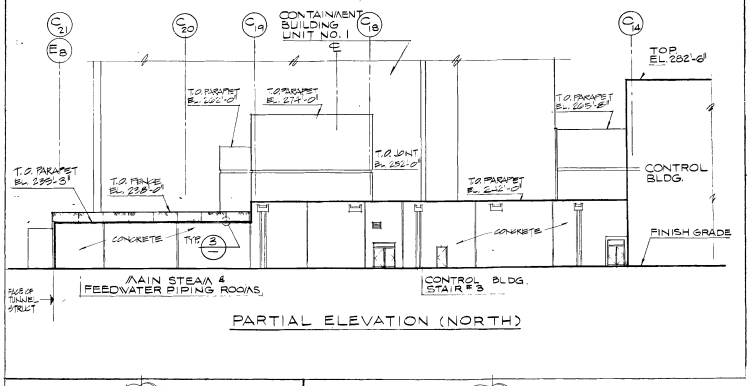

PARTIAL ELEVATION (NORTH)

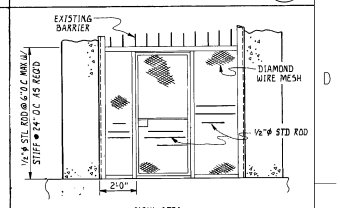

MSIV AREA
DOOR 111
(LOOKING SOUTH)

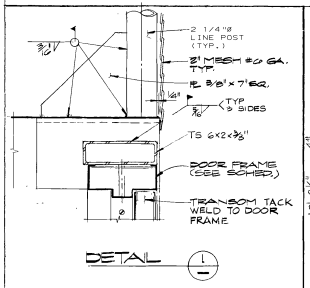

DETAIL 1

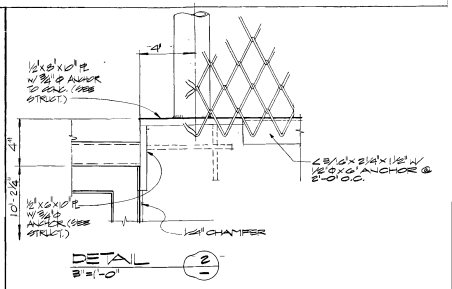

DETAIL 2
3/8"=1'-0"

LEGEND
NODAL BOUNDARY 1

THIS DOCUMENT CONTAINS PROPRIETARY, CONFIDENTIAL, AND/OR TRADE SECRET INFORMATION OF THE SUBSIDIARIES OF THE SOUTHERN COMPANY OR OF THIRD PARTIES. IT IS INTENDED FOR USE ONLY BY EMPLOYEES OF, OR AUTHORIZED CONTRACTORS OF, THE SUBSIDIARIES OF THE SOUTHERN COMPANY. UNAUTHORIZED POSSESSION, USE, DISTRIBUTION, COPYING, DISSEMINATION, OR DISCLOSURE OF ANY PORTION HEREOF IS PROHIBITED.

NO.	REVISIONS	DATE	DR	CHK	APPV	DTL
3						
2						
1	REVISED PER REA 96-VAA054	10-1-98	GS	RBH	CBH	
0	ISSUED PER REA 96-VAA054	SEE MICROFILM FOR SIGNATURES				

SOUTHERN COMPANY SERVICES, INC.
BIRMINGHAM, ALABAMA

GEORGIA POWER COMPANY
ALVIN W. VOGTLE NUCLEAR PLANT

NODAL BOUNDARY
MSIV / MFIV AREA
CONTROL BUILDING

SCALE: NONE	DRAWING NO.	REV.
JOB NO. 10604	1X6DD302	1

SIZE E 34X44

CAD NAME 1X6DD302

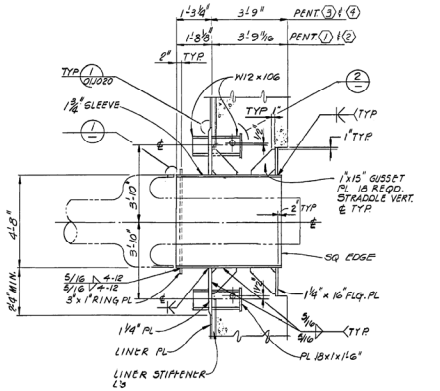

PENETRATIONS 1 THRU 4

SECTION A 1/12"=1'-0" 01J010 01J012 01J013

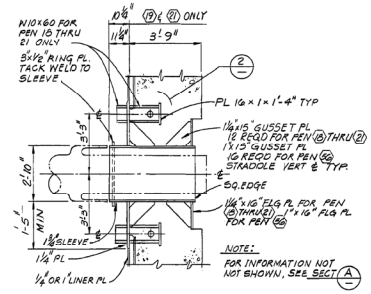

PENETRATIONS 18 THRU 21 & 22

SECTION B 1/12"=1'-0" 01J010 01J012 01J013

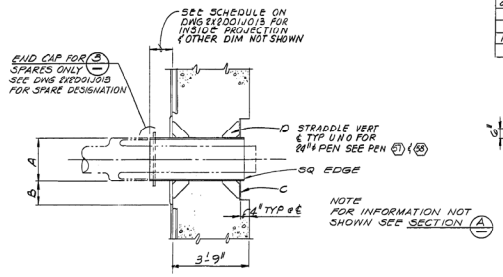

TYPICAL MECHANICAL PENETRATION

SECTION C 1/12"=1'-0" 01J010 01J011 01J013

TYP MECHANICAL PEN SCHEDULE

A	B	C	D	NO. OF GUSSETS
20 & 24	13	1 x 11	3/4 x 10	10
20	11	3/4 x 9	1/2 x 8	8
14	11	3/4 x 9	3/4 x 8	6
12 & 10	9	1/2 x 7	1/2 x 6	6
18	11	3/4 x 8	1/2 x 8	8

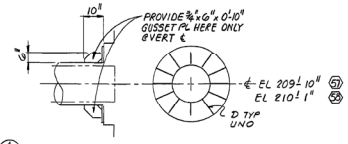

PENETRATION 57 & 58

SECTION H 1/2"=1'-0" 01J010 01J011

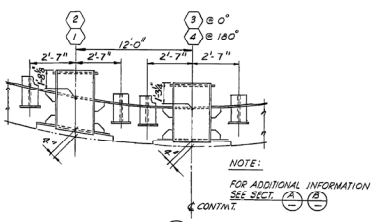

SECTION D NTS 01J010

SECTION E OPP HAND 01J012

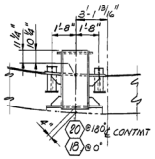

SECTION F NTS 01J010

SECTION G OPP HAND 01J012

SLEEVE SIZE	t s	a (±1/32)	b (±1/16)	t w (±1/32)
10" ϕ	.365	.365	.375	.5
12" ϕ	.375	.375	.375	.5
18" ϕ	.750	.750	.750	.375

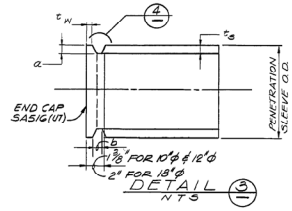

DETAIL 3 NTS

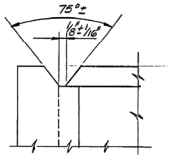

DETAIL 4 NTS

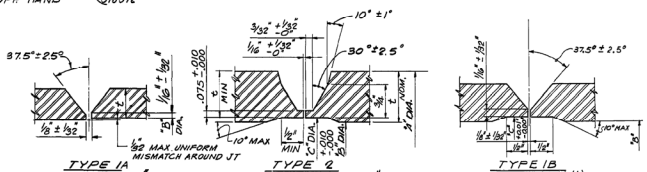

TYPE 1A
NOMINAL WALL (t) 3/16" THRU 3/8"

TYPE 2
NOMINAL WALL (t) OVER 1"

TYPE 1B
NOMINAL WALL (t) OVER 3/8" THRU 1"

TABLE OF COUNTERBORE "C" DIMENSIONS FOR PENETRATION PIPE SLEEVES TYPES 1B AND 2 WELD END PREPARATIONS

PENETRATION NUMBER	PENETRATION PIPE SLEEVE OUTSIDE DIA	WALL THICKNESS SCHEDULE	"C" BORE DIMENSION	PIPE SLEEVING MATERIAL
1 THRU 4	8"	1.75" NOM	23.334"	SA-516-70
18 THRU 21 & 56	34"	1.75" NOM	31.334"	
59 AND 60	26"	1" NOM	24.209"	
56	24"	1" NOM	22.209"	
65 AND 66	24"	0.5"/XS	23.084"	SA-333, GR 6
34 AND 35	20"	0.5"/XS	19.084"	
7 THRU 12, 69 & 68 THRU 74, 80 AND 87	18"	0.5/XS	17.064"	
91 THRU 98 101 THRU 104	18"	0.75"/SCH 80	16.646"	
50, 51 AND 53	14"	0.5/XS	13.192"	
57	24"	1" NOM	22.180	SA-516-70 & SA-333

NOTE:
WELD-END PREPARATION TYPE 1B & TYPE 2 REQUIRE MACHINING TO COUNTERBORE DIMENSION "C" (SEE TABLE).
"C" BORE TOLERANCE APPLICABLE WHILE PIECE IS IN THE SHOP JIG.

WHEN THE I.D. OF ACTUAL PIPE TO BE FABRICATED IS GREATER THAN REQUIRED FOR MINIMUM RING SEATING WHEN MACHINING TO DIMENSION "C" THE METAL REQUIRED FOR MACHINING MAY BE REPLACED BY DEPOSITING WELD METAL ON THE I.D. OF THE PIPE IN THE AREA TO BE MACHINED.

ABBREVIATION

A. NOMINAL PIPE O.D., INCHES
B. NOMINAL PIPE I.D., INCHES
C. MACHINED PIPE I.D., INCHES.
t. NOMINAL WALL THK., INCHES

WELD PREPARATIONS

DETAIL 1 N.T.S.

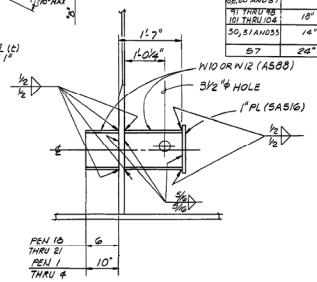

DETAIL 2 1" = 1'-0"

NOTES:

1. FOR GENERAL NOTES AND REFERENCE DWGS. SEE DWG. 1X2001J001.
2. MATERIAL SHOWN IN PHANTOM BY OTHERS.
3. COMPLETED ASSEMBLIES SHALL BE STRESS RELIEVED PER ASME SECTION III.
4. PLATES IDENTIFIED BY (U.T.) REQUIRE ULTRASONIC TESTING IN ACCORDANCE WITH SPECIFICATION X2AG06. REV 4
5. THE TORQUE ON THE 2 FLANGE CONNECTIONS SHOWN ON SHEET 2 FOR PENETRATION 5, 55 AND 90 SHOULD INITIALLY BE 320 FT. LBS. AND MAY BE INCREASED IF REQUIRED NOT TO EXCEED A MAXIMUM OF 448 FT. LBS.

THIS DRAWING WAS RENUMBERED FROM 2X2001J019 (SHEET 1)
WORK THIS DRAWING WITH: 2X2001J019-2
7.0

SOUTHERN COMPANY SERVICES, INC.
BIRMINGHAM, ALABAMA

GEORGIA POWER COMPANY
ALVIN W. VOGTLE NUCLEAR PLANT

CONTAINMENT
WALL LINER PLATE
PENETRATIONS DETAILS SHT. 1

SCALE: AS NOTED | DRAWING NO. 2X2001J019-1 | VER. 7.0
JOB NO. 10604
SIZE E 34x44

THIS DOCUMENT CONTAINS PROPRIETARY, CONFIDENTIAL, AND/OR TRADE SECRET INFORMATION OF THE SUBSIDIARIES OF THE SOUTHERN COMPANY OR OF THIRD PARTIES. IT IS INTENDED FOR USE ONLY BY EMPLOYEES OF, OR AUTHORIZED CONTRACTORS OF, THE SUBSIDIARIES OF THE SOUTHERN COMPANY. UNAUTHORIZED POSSESSION, USE, DISTRIBUTION, COPYING, DISSEMINATION, OR DISCLOSURE OF ANY PORTION HEREOF IS PROHIBITED.

NO.	VERSIONS	DATE	DR	CHK	APPV
7.0	REVISED PER ABN 2100540301M003, VER 1.0	05/25/10	ELC	MWD	JMR

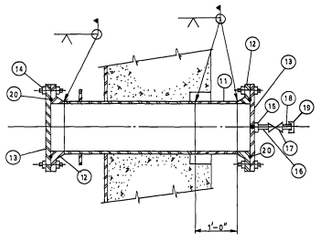

SECTION J 01J013
N.T.S.

PENETRATIONS 5 55 90

NOTE:
FOR INFORMATION NOT SHOWN SEE SECTION C

SEE MODE 5 AND MODE 6 OPTION (OUTAGE "FIXTURE")

11. EXTENSION SLEEVE FOR PENETRATION NRS 5, 55 & 90 – 10"ø PIPE, STD. WT, ASME SA-333 GR.6, CLASS 2.
12. WELDING NECK FLANGE ("O" RING JOINTS) – 10" 150 LBS, ASME SA-105 TO MATCH STD. WT. PIPE CLASS 2.
13. BLIND FLANGE – 10" 150 LBS, WITH "O" RING JOINTS, ASME SA-105 GR.6, CLASS 2.
14. NUTS & BOLTS – 7/8"ø ASME SA-194 GR.2H AND 7/8"ø X 5 3/4" LG. ASME SA-193 GR.B7.
15. HALF COUPLING – 3/4" S.W. 3000 LBS., ASME SA-105, CLASS 2.
16. 3/4"ø X 3" LONG NIPPLE (P.B.E.) – SCH. 80, ASME SA-106 GR.B, CLASS 2.
17. PENS. 5 & 90 HAVE 3/4" GLOBE VALVE: MARK# 378 ASME SA-105, S.W. CLASS 2 PEN. 55 HAS 3/4" GATE VALVE: MARK#144 ASME SA-105, S.W. CLASS 2 USE VALVE TAG FOR VALVE TAG NO. 7.0
18. 3/4"ø X 3" LG. NIPPLE (T.O.E.) – SCH 80 ASME SA-106 GR.B, CLASS 2.
19. 3/4" THREATED CAP – 3000 LBS, ASME SA-105, CLASS 2.
20. RING JOINT GASKET (R52) – STAINLESS STEEL.

~VALVE TABLE~

PENETRATION NR	VALVE TAG NR
5	2-1222-X4-017
55	2-1222-X4-018
90	2-1222-X4-019

(OUTAGE FIXTURE) NOTES:

1. WELD ALL PIPE 1/8" FILLET BOTH SIDES OF 10"-150# FLANGE (MACHINE TO 3/4" FLAT FACE (A-105).
2. TRUE FLANGE SEATING SURFACE AFTER WELDING (IF REQUIRED) MATE TO EXISTING FLANGE.
3. PROCESS IS GTAW ER70S-6 OR SMAW E7018.
4. ALL PIPE IS TO BE THREADED ON BOTH ENDS. 11 1/2 TPI FOR 1.0" ø, 1.5" ø & 2.0" ø : 8 TPI - FOR 3.0" ø.
5. PIPE SLEEVES USED FOR CABLING TO BE SEALED WITH P-80 TO WITHIN 1/2" OF EACH END.
6. 1.5" ø PIPE OPENINGS NOT USED TO BE CAPPED WITH 1.5 COUPLING WELDED TO 1.5" ø SQ. DRIVE CAP. 3" ø & 2" SLEEVE PORTS TO BE CAPPED WITH STANDARD PIPE CAP WHEN NOT IN USE.
7. 1.5" ø, 2" ø & 3" ø PIPE SCH. 40, 1" ø SCH. 80 A-106.

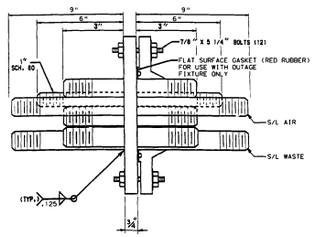

OUTAGE "FIXTURE" PROFILE
(1.5"ø & 1"ø PIPE)
5 55 OR 90

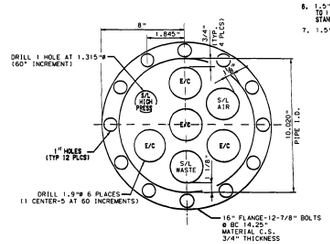

OUTAGE "FIXTURE" ELEVATION
(1.5"ø & 1"ø PIPE)
5 55 OR 90

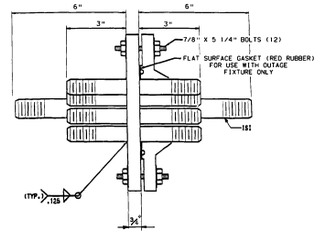

OUTAGE "FIXTURE" PROFILE
(3"ø & 1.5"ø PIPE)
5 55 OR 90

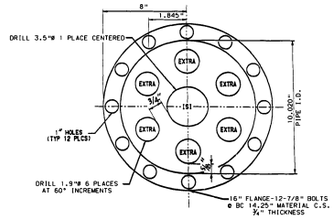

OUTAGE "FIXTURE" ELEVATION
(3"ø & 1.5"ø PIPE)
5 55 OR 90

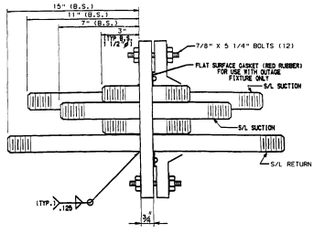

OUTAGE "FIXTURE" PROFILE
(2"ø & 1.5"ø PIPE)
5 55 OR 90

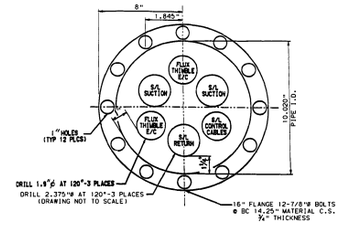

OUTAGE "FIXTURE" ELEVATION
(2"ø & 1.5"ø PIPE)
5 55 OR 90

THIS DRAWING WAS RENUMBERED FROM 2X2D01J019 (SHEET 2) 7.0
WORK THIS DRAWING WITH: 2X2D01J019-1

0

SOUTHERN COMPANY SERVICES, INC.
BIRMINGHAM, ALABAMA

GEORGIA POWER COMPANY
ALVIN W. VOGTLE NUCLEAR PLANT

CONTAINMENT
WALL LINER PLATE
PENETRATIONS DETAILS SHT. 1

SCALE: AS NOTED
JOB NO. 10604
DRAWING NO. 2X2D01J019-2 7.0
VER. 7.0

THIS DOCUMENT CONTAINS PROPRIETARY, CONFIDENTIAL, AND/OR TRADE SECRET INFORMATION OF THE SUBSIDIARIES OF THE SOUTHERN COMPANY OR OF THIRD PARTIES. IT IS INTENDED FOR USE ONLY BY EMPLOYEES OF, OR AUTHORIZED CONTRACTORS OF, THE SUBSIDIARIES OF THE SOUTHERN COMPANY. UNAUTHORIZED POSSESSION, USE, DISTRIBUTION, COPYING, DISSEMINATION, OR DISCLOSURE OF ANY PORTION HEREOF IS PROHIBITED.

NO.	VERSIONS	DATE	DR	CHK	APPV
7.0	REVISED PER ABN 2100540301M003. VER 1.0	05/25/10	ELC	MWD	JMR

SIZE E 34X44

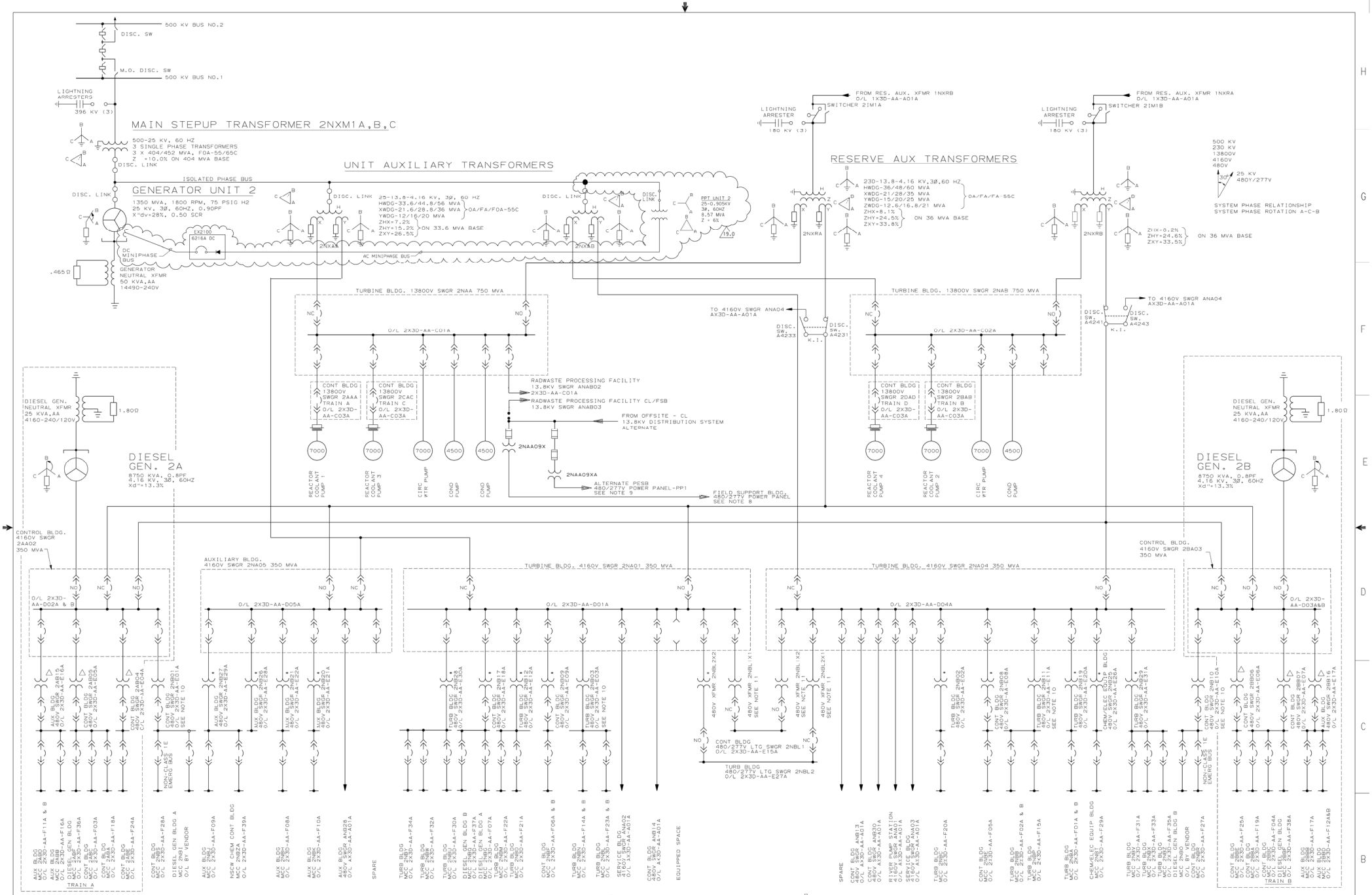

NOTES:

1. FOR DEVICE TABLE, GENERAL NOTES, REFERENCE DWG & LEGEND SEE DWGS 2X3D-AA-A00A THRU 2X3D-AA-A00E.

2. CLASS 1E LOAD CENTER TRANSFORMERS
4160-480V
1000 KVA AA 80°C RISE, Z=5.75%

3.• NON-CLASS 1E LOAD CENTER TRANSFORMERS
4160-480V
1000/1333 KVA AA/FA 115°C RISE, Z=5.75%

4.• LIGHTING LOAD CENTER TRANSFORMERS
4160-480Y/277V
750/1000 KVA AA/FA 115°C RISE, Z=5.75%

5.• NON-CLASS 1E LOAD CENTER TRANSFORMERS
4160-480V
300 KVA AA 115°C RISE, Z=2.7%

6. FOR SWYD DETAILS, SEE DWG AX3D-AA-L50A

7. FOR SWITCHING/LOAD DISPATCH EQUIPMENT NUMBERS, SEE DWG 2X3D-AA-A01B

8. NON CLASS 1E
480/277
13800V GRD Y/7970/480V/277
1500 KVA 5.74% Z

9. NON-CLASS 1E
480/277 VOLT
13800V GRD Y/7970/480V/277
500 KVA 4.38% Z

10.• NON-CLASS 1E LOAD CENTER TRANSFORMERS
4160-480V
1000/1333 KVA AA/FA 80°C RISE, Z=5.75%

11.• LIGHTING LOAD CENTER TRANSFORMERS
4160-480Y/277V
750/1000 KVA AA/FA 80°C RISE, Z=5.75%

12. DELETED

13. K.I. - KEY INTERLOCK (THE KEY INTERLOCK PREVENTS BOTH SWITCHES FROM BEING CLOSED AT THE SAME TIME.)

NUCLEAR SAFETY RELATED A B

Q

SOUTHERN COMPANY SERVICES, INC.
BIRMINGHAM, ALABAMA

GEORGIA POWER COMPANY
ALVIN W. VOGTLE NUCLEAR PLANT

MAIN ONE LINE
UNIT 2

THIS DOCUMENT CONTAINS PROPRIETARY, CONFIDENTIAL, AND/OR TRADE SECRET INFORMATION OF THE SUBSIDIARIES OF THE SOUTHERN COMPANY OR OF THIRD PARTIES. IT IS INTENDED FOR USE ONLY BY EMPLOYEES OF, OR AUTHORIZED CONTRACTORS OF, THE SUBSIDIARIES OF THE SOUTHERN COMPANY. UNAUTHORIZED POSSESSION, USE, DISTRIBUTION, COPYING, DISSEMINATION, OR DISCLOSURE OF ANY PORTION HEREOF IS PROHIBITED.

NO.	VERSIONS	DATE	DR	CHK	APPV
19.0	REVISED PER ABN 20490016 01E015, VER. 2.0	10-17-08	Vep	MLH	JMR

SCALE: NONE | DRAWING NO. 2X3D-AA-A01A | VER. 19.0

JOB NO.10604

SIZE E 34X44

DWG CATEGORY: CRITICAL

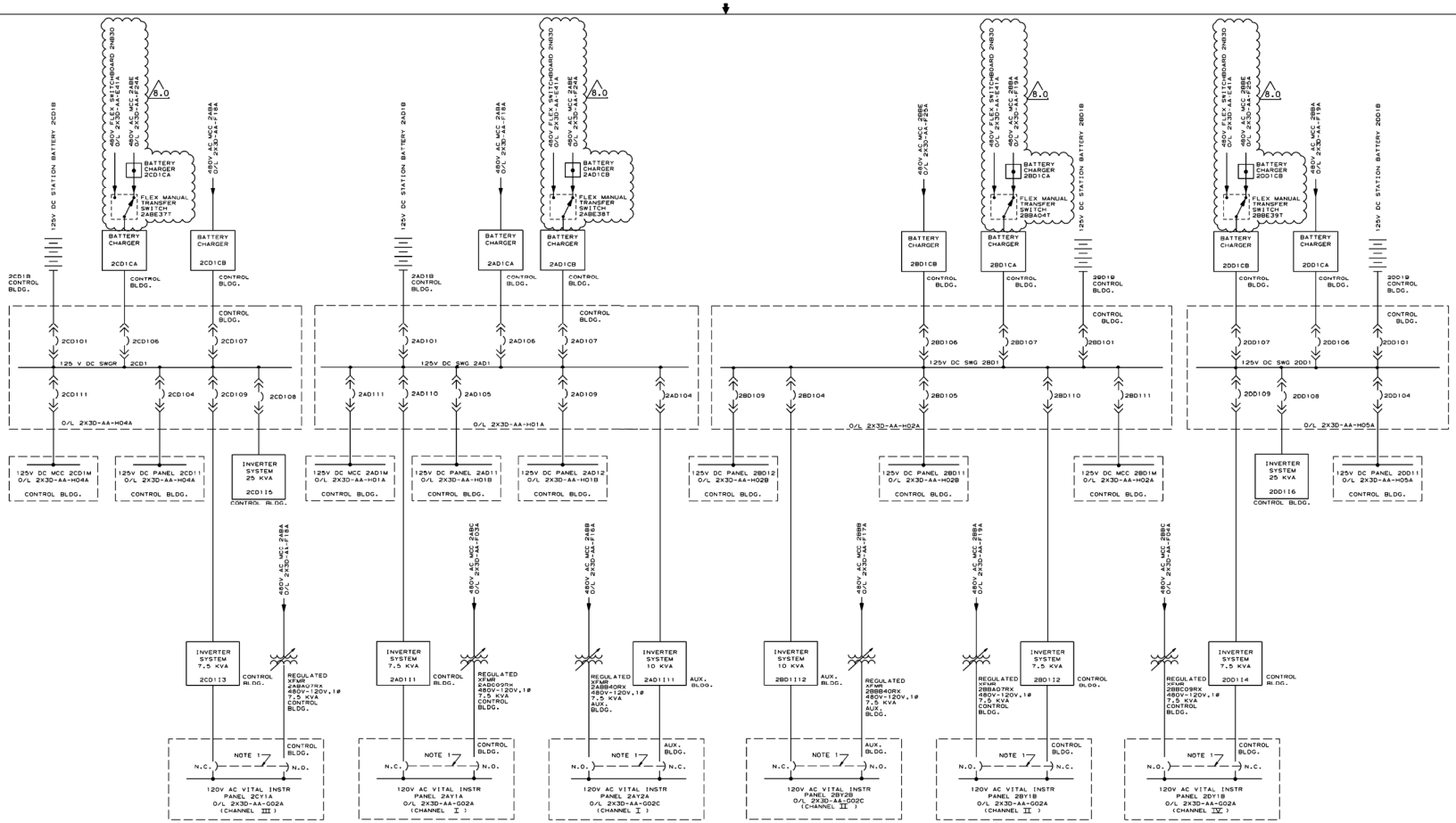

NOTE:
1. MECHANICAL INTERLOCKS SHALL BE PROVIDED SUCH THAT ONLY ONE BREAKER OF THE TWO INTERLOCKED IS CLOSED.

NUCLEAR SAFETY RELATED A B C D

0

SOUTHERN COMPANY SERVICES, INC.
BIRMINGHAM, ALABAMA

GEORGIA POWER COMPANY
ALVIN W. VOGTLE NUCLEAR PLANT

MAIN ONE LINE
CLASS 1E 125V DC AND
120V VITAL AC SYSTEMS

SCALE: NONE	DRAWING NO.	VER.
JOB NO. 10604	2X3D-AA-G01A	8.0

SIZE E 34X44

DWG CATEGORY: CRITICAL

THIS DOCUMENT CONTAINS PROPRIETARY, CONFIDENTIAL, AND/OR TRADE SECRET INFORMATION OF THE SUBSIDIARIES OF THE SOUTHERN COMPANY OR OF THIRD PARTIES. IT IS INTENDED FOR USE ONLY BY EMPLOYEES OF, OR AUTHORIZED CONTRACTORS OF, THE SUBSIDIARIES OF THE SOUTHERN COMPANY. UNAUTHORIZED POSSESSION, USE, DISTRIBUTION, COPYING, DISSEMINATION, OR DISCLOSURE OF ANY PORTION HEREOF IS PROHIBITED.

NO.	VERSIONS	DATE	DR	CHK	APPV
8.0	REVISED PER ABN SNC475965E010, VER. 1.0	3/31/16	LEH	SO	WLN

EQUIPMENT TAG NUMBER	EQUIPMENT DESCRIPTION	PROJECT CLASSIFICATION (ELECTRICAL SYSTEM)	PROCUREMENT SPECIFICATION	BUS NUMBER	BUS VOLTAGE	NAMEPLATE RATING HP (OR KW)	REFERENCE DWG. 2X3D-	LOSS OF COOLANT ACCIDENT,SI PREFERRED OFFSITE SOURCE AVAILABLE: MANUAL, PROCESS, ACCIDENT OR SEQUENCER START SEE TABLE 1	TIME (SECONDS) TO START (NOTE 7)	RUNNING TIME AFTER START (NOTE 4)	LOSS OF OFFSITE POWER & SUBSEQUENT SI: MANUAL, PROCESS, ACCIDENT OR SEQUENCER START SEE TABLE 1	TIME (SEC) TO START AFTER D.G. ERGS IS CLOSED (NOTE 3.b)	RUNNING TIME AFTER START (NOTE 4)	LOSS OF OFFSITE POWER: MANUAL, PROCESS, ACCIDENT OR SEQUENCER START SEE TABLE 1	TIME (SEC) TO START AFTER D.G. ERGS IS CLOSED (NOTE 3.c)	RUNNING TIME AFTER START (NOTE 4)
21202P4001M01	NUC SERV CLG WTR PP	11E	X4	2AA02	4160V	700	BD-K04A	S	25.5	C	S	25.5	C	S	25.5	C
21202P4003M01	NUC SERV CLG WTR PP	11E	X4	2AA02	4160V	700	BD-K04C	S	25.5	C	S	25.5	C	S	25.5	C
21202P4005M01	NUC SERV CLG WTP PP (SPARE)	11E	X4	2AA02	4160V	700	BD-K04E	NOTE. 5.	30.5	—	NOTE 5	30.5	—	NOTE 5.	30.5	—
21203P4001M01	COMP CLG WTR PP	11E	X4	2AA02	4160V	300	BD-L01A	S	20.5	C	S	20.5	C	S	20.5	C
21203P4003M01	COMP CLG WTR PP	11E	X4	2AA02	4160V	300	BD-L01C	S	20.5	C	S	20.5	C	S	20.5	C
21203P4005M01	COMP CLG WTR PP (SPARE)	11E	X4	2AA02	4160V	300	BD-L01E	NOTE 5	25.5	—	NOTE 5	25.5	—	NOTE 5	25.5	—
21204P6003M01	SAFETY INJ PP	11E	X6	2AA02	4160V	450	BD-D01C	S	5.5	C	S	5.5	C	M	>30.5	C
21205P6001M01	RESID HT REMVL PP	11E	X6	2AA02	4160V	400	BD-E01A	S	10.5	C	S	10.5	C	M	>30.5	C
21206P6001M01	CONTAINMENT SPRAY PP	11E	X6	2AA02	4160V	400	BD-J01A	NOTE 6	15.5	C	NOTE 6	15.5	C	M	>30.5	C
21208P6002M01	CENTRIFUGAL CHARG PP	11E	X6	2AA02	4160V	600	BD-C01A	S	0.5	C	S	0.5	C	S	0.5	C
21217P4001M01	AUX COMP CLG WTR PP	11E	X4	2AA02	4160V	600	BD-L03A	M	>30.5	C	M	>30.5	C	S	15.5	C
21302P4003M01	AUX FDWTR PP-MOTOR DRIVEN	11E	X4	2AA02	4160V	900	BC-F04A	S	20.5	C	S	20.5	C	S	20.5	C
21592C7001M01	ESF CHILLER (COMPRESSOR)	11E	X4	2AA02	4160V	400	BG-G02A	P	>30.5	C	P	>30.5	C	P	>30.5	C
21805S3B04	LOAD CENTER TRANS. 2AB04	11E	X3	2AB04	4160 -480V	1000KVA	BA-D02F	—	—	C	—	0	C	—	0	C
	SECONDARY BREAKER 2AB04	11E	X3	2AB04	480V	—	BA-E02A	—	—	C	S	0.5	C	S	0.5	C
21501A7001M01	CTMT CLG UNIT HIGH SPEED	11E	X4	2AB04	480V	125	BG-B01A	NOTE 10	NA	NA	NOTE 10	NA	NA	S NOTE 15	50.5	C
	CTMT CLG UNIT LOW SPEED	11E	X4	2AB04	480V	62.5	BG-B03F	S	30.5	C	S	30.5	C	NOTE 10	NA	NA
21501A7002M01	CTMT CLG UNIT HIGH SPEED	11E	X4	2AB04	480V	125	BG-B01B	NOTE 10	NA	NA	NOTE 10	NA	NA	S NOTE 15	50.5	C
	CTMT CLG UNIT LOW SPEED	11E	X4	2AB04	480V	62.5	BG-B03G	S	30.5	C	S	30.5	C	NOTE 10	NA	NA
21501A7005M01	CTMT CLG UNIT HIGH SPEED	11E	X4	2AB04	480V	125	BG-B01E	NOTE 10	NA	NA	NOTE 10	NA	NA	S	30.5	C
	CTMT CLG UNIT LOW SPEED	11E	X4	2AB04	480V	62.5	BG-B03K	S	30.5	C	S	30.5	C	NOTE 10	NA	NA
21501A7006M01	CTMT CLG UNIT HIGH SPEED	11E	X4	2AB04	480V	125	BG-B01F	NOTE 10	NA	NA	NOTE 10	NA	NA	S	30.5	C
	CTMT CLG UNIT LOW SPEED	11E	X4	2AB04	480V	62.5	BG-B03L	S	30.5	C	S	30.5	C	NOTE 10	NA	NA
21805S3B05	LOAD CENTER TRANS. 2AB05	11E	X3	2AB05	4.16 -480V	1000KVA	BA-D02L	—	—	C	—	0	C	—	0	C
	SECONDARY BREAKER 2AB05	11E	X3	2AB05	480V	—	BA-E02P	—	—	C	S	0.5	C	S	0.5	C
21566B7001M01	DGB VENT FAN	11E	X4	2AB05	480V	50	BG-F01B	I	>30.5	C	I	>30.5	C	I	>30.5	C
21566B7003M01	DGB VENT FAN	11E	X4	2AB05	480V	50	BG-F01C	P	>30.5	C	P	>30.5	C	P	>30.5	C
21531N7001H01	CB CONTROL ROOM HTR	11E	X4	2AB05	480V	118KW	BG-C05P	N NOTE 11	>30.5	C	N NOTE 11	>30.5	C	N NOTE 11	>30.5	C
21531N7001M01	CB CONTROL ROOM FIL UNIT	11E	X4	2AB05	480V	125	BG-C01E	P	>30.5	C	P	>30.5	C	P	>30.5	C
21513N7001000	CTB HYDROGEN RECOMBINER	11E	X6	2AB05	480V	75KW	BG-B02U	M	>30.5	C	M	>30.5	C	M	>30.5	C
21805S3B15	LOAD CENTER TRANS. 2AB15	11E	X3	2AB15	4.16 -480V	1000KVA	BA-D02K	—	—	C	—	0	C	—	0	C
	SECONDARY BREAKER 2AB15	11E	X3	2AB15	480V	—	BA-E02P	—	—	C	S	0.5	C	S	0.5	C
21202N4001M01	NUC SERV CLG TWR FAN	11E	X4	2AB15	480V	100	BD-K03A	P	>30.5	C	P	>30.5	C	P	>30.5	C
21202N4001M02	NUC SERV CLG TWR FAN	11E	X4	2AB15	480V	100	BD-K03B	P	>30.5	C	P	>30.5	C	P	>30.5	C
21202N4001M03	NUC SERV CLG TWR FAN	11E	X4	2AB15	480V	100	BD-K03C	P	>30.5	C	P	>30.5	C	P	>30.5	C
21202N4001M04	NUC SERV CLG TWR FAN	11E	X4	2AB15	480V	100	BD-K03D	P	>30.5	C	P	>30.5	C	P	>30.5	C
21213P6002M01	SPENT FUEL PIT PUMP	11E	X6	2AB15	480V	100	BD-H01B	M	>30.5	C	M	>30.5	C	M	>30.5	C
21561N7001M01	PIPE PEN RM FILTER/EXH FAN	11E	X4	2AB15	480V	75	BG-D01D	S	15.5	C	S	15.5	C	S NOTE 17	15.5	C
21561N7001H01	PIPE PEN FLTR/EXH UNIT HTR	11E	X4	2AB15	480V	80KW	BG-D01C	K NOTE 17	15.5	C	K NOTE 17	15.5	C	K NOTE 17	15.5	C
21805S3B01	LOAD CENTER TRANS. 2NB01	62E	X3	2NB01	4.16 -480V	1000KVA	BA-D02G	SEE NOTE 3.a	>30.5	C	SEE NOTE 3.a	>30.5	C	—	0	C
	SECONDARY BREAKER	62E	X3	2NB01	480V		BA-E01A	SEE NOTE 3.a	>30.5	C	SEE NOTE 3.a	>30.5	C	S	10.5	C
21511B7001M01	CTB CAV CLG FAN (NON 1E)	62E	X4	2NB01	480V	75	BG-B02G	SEE NOTE 3.a	>30.5	C	SEE NOTE 3.a	>30.5	C	S	10.5	C
21805O3PB1	FDR TO HTR PNL 2NBPB1	62E	X3	2NB01	480V	483KW	BD-B01K	SEE NOTE 3.a	>30.5	C	SEE NOTE 3.a	>30.5	C	K	10.5	C
21806B3CN5	BATTERY CHARGER 2ND3ACA	62E	X3	2NB01	480V	150KVA	BA-E03P	SEE NOTE 3.a	>30.5	C	SEE NOTE 3.a	>30.5	C	MM	10.5	C
21806B3CN1	BATTERY CHARGER 2ND1CA	62E	X3	2NB01	480V	100KVA	BA-E03F	SEE NOTE 3.a	>30.5	C	SEE NOTE 3.a	>30.5	C	MM	10.5	C
21806B3CAA	BATTERY CHARGER 2AD1CA	11E	X3	2ABA	480V	100KVA	AA-G01A	N	0	C	N	0.5	C	N	0.5	C
21806B3CCB	BATTERY CHARGER 2C01CB (NOTE 20)	11E	X3	2ABA	480V	75KVA	AA-G01A	N	0	C	N	0.5	C	N	0.5	C
21807Y312	REG XFMR 2ABA07RX	11E	X3	2ABA	480V	7.5KVA	AA-G02A	N	0	C	N	0.5	C	N	0.5	C
21531B7002M01	CBCR CHLR RM VENT FAN	11E	X4	2ABA	480V	5.0	BG-C01B	K	0	C	K	0.5	C	K	0.5	C
21592P7001M01	CB ESF CHILLED WATER PUMP	11E	X4	2ABA	480V	30	BG-G02C	L NOTE 16a	60	C	L NOTE 16a	60.5	C	M	>30.5	C
21531B7005M01	CB CR RETURN AIR FAN (NOTE 18)	11E	X4	2ABA	480V	20	BG-C02Z	NOTE 18	N/A	N/A	NOTE 18	N/A	N/A	NOTE 18	N/A	N/A
21592C7001M02 &M03	CB ESF CHILLER PURGE COMP. B	11E	X4	2ABA	480V	0.75	AA-F16A	I,K NOTE 16b,c	>30.5	C	I,K NOTE 16b,c	>30.5	C	I,K NOTE 16b,c	>30.5	C
21539A7005M01	CB NORMAL AC RM ESF AC FAN MOT (NOTE 20)	11E	X4	2ABA	480V	5.0	BG-C07R	L	0	C	L	0.5	C	K	0.5	C
DISTR PNL 2AYA1	120/240V DISTRIBUTION PANEL	11E	X3	2ABA	480V	15KVA	AA-F18A	N	0	C	N	0.5	C	N	0.5	C
2HV-12114	MCR AIR INTAKE ISO	11E	X4	2ABA	480V	1.9	BG-C01G	K	0	10SEC	K	0.5	10SEC	K	0.5	10SEC
2HV-12130	CBCR RTRN AIR FAN IN	11E	X4	2ABA	480V	.2	BG-C01X	NOTE 11	>30.5	10SEC	I NOTE 11	>30.5	10SEC	I NOTE 11	>30.5	10SEC
2HV-12118	CBCR FLTR UNIT IN	11E	X4	2ABA	480V	.2	BG-C01V	M	>30.5	10SEC	M	>30.5	10SEC	M	>30.5	10SEC
2HV-12128	CBCR FLTR UNIT OUT	11E	X4	2ABA	480V	.2	BG-C01X	I NOTE 11	>30.5	10SEC	I NOTE 11	>30.5	10SEC	I NOTE 11	>30.5	10SEC
2HV-11605	NSCW PUMP P4005 OUT	11E	X5	2ABB	480V	1.9	BD-K04Z	I	70.5	15SEC	I	70.5	15SEC	I	70.5	15SEC
2HV-8508A	ALT CHG PUMP MINIFLOW	11E	X6	2ABB	480V	.7	BD-C01T	L	0	10SEC	L	0.5	10SEC	I	0.5	10SEC
2HV-8509A	ALT CHG PUMP MINIFLOW	11E	X6	2ABB	480V	.7	BD-C01V	M	>30.5	10SEC	M	>30.5	10SEC	M	>30.5	10SEC
21807Y31A11	INVERTER 2AD11I11	11E	X3	2ABB	480V	10KVA	AA-G01A	SEE NOTE 14	0	C	SEE NOTE 14	0.5	C	SEE NOTE 14	0.5	C
21807Y3RX22	REG XFMR 2ABB40RX	11E	X3	2ABB	480V	7.5KVA	AA-G01A	N	0	C	N	0.5	C	N	0.5	C
21202P4008M01	NSCW XFR PUMP	11E	X4	2ABB	480V	30	BD-K01B	M	>30.5	4DAYS	M	>30.5	4DAYS	M	>30.5	C
21555A7005M01	ELEC MCC ROOM COOLER	11E	X4	2ABB	480V	2.0	BG-D05E	L	0	C	L	0.5	C	K	0.5	C
21555A7011M01	CCWP ROOM COOLER FAN	11E	X4	2ABB	480V	5.0	BG-D05E	L	0	C	L	0.5	C	K	0.5	C
21555A7017M01	SFP PUMP ROOM CLR	11E	X4	2ABB	480V	5.0	BG-D05U	L	0	C	L	0.5	C	K	0.5	C
2HV-11606	NSCW PUMP P4003 OUT	11E	X5	2ABB	480V	2.0	BD-K04Z	I	70.5	15SEC	I	70.5	15SEC	I	70.5	15SEC

EQUIPMENT TAG NUMBER	EQUIPMENT DESCRIPTION	PROJECT CLASSIFICATION (ELECTRICAL SYSTEM)	PROCUREMENT SPECIFICATION	BUS NUMBER	BUS VOLTAGE	NAMEPLATE RATING HP (OR KW)	REFERENCE DWG. 2X3D-	LOSS OF COOLANT ACCIDENT,SI PREFERRED OFFSITE SOURCE AVAILABLE: MANUAL, PROCESS, ACCIDENT OR SEQUENCER START SEE TABLE 1	TIME (SECONDS) TO START (NOTE 7)	RUNNING TIME AFTER START (NOTE 4)	LOSS OF OFFSITE POWER & SUBSEQUENT SI: MANUAL, PROCESS, ACCIDENT OR SEQUENCER START SEE TABLE 1	TIME (SEC) TO START AFTER D.G. ERGS IS CLOSED (NOTE 3.b)	RUNNING TIME AFTER START (NOTE 4)	LOSS OF OFFSITE POWER: MANUAL, PROCESS, ACCIDENT OR SEQUENCER START SEE TABLE 1	TIME (SEC) TO START AFTER D.G. ERGS IS CLOSED (NOTE 3.c)	RUNNING TIME AFTER START (NOTE 4)
21540B7003M01	NSCW TWR CAB TUN VENT FAN	11E	X4	2ABB	480V	3.0	BG-K01C	K	0	C	K	0.5	C	K	0.5	C
2HV-8104 *	BORIC ACID TANK TO CHARGE PUMP	11E	X6	2ABB	480V	.7	BD-C03F	M	>30.5	10 SEC	M	>30.5	10 SEC	M	>30.5	10 SEC
2HV-8116 *	CHARGING PUMP 2A DISCHARGE	11E	X6	2ABB	480V	.7	BD-C05E	L	0	10 SEC	L	0.5	10 SEC	M	>30.5	10 SEC
2HV-8106	CHG PUMP TO RCS ISO	11E	X6	2ABB	480V	2.0	BD-C03H	L	0	10 SEC	L	0.5	10 SEC	M	>30.5	10 SEC
2HV-1668B	NUC SERV CL TWR A BYPASS VALVE	11E	X5	2ABB	480V	.7	BD-K05V	K	0	20 SEC MAX	K	0.5	20 SEC MAX	K	0.5	20 SEC MAX
2HV-8804A	RHR HEXCH TO CHG PUMP	11E	X6	2ABB	480V	1.6	BD-D02L	M	>30.5	15 SEC	M	>30.5	15 SEC	M	>30.5	15 SEC
2HV-8809A	RHR TNA TO SIS COLD LEG ISO	11E	X6	2ABB	480V	7.8	BD-D02V	M	>30.5	15 SEC	M	>30.5	15 SEC	M	>30.5	15 SEC
2HV-8835 *	SIS COLD LEG LOOP INLET HDR ISO	11E	X6	2ABB	480V	1.0	BD-D03H	M	>30.5	10 SEC	M	>30.5	10 SEC	M	>30.5	10 SEC
2HV-1668A	NUC SERV CL TWR A ISO VALVE	11E	X5	2ABB	480V	1.6	BD-K05U	K	0	20 SEC MAX	K	0.5	20 SEC MAX	K	0.5	20 SEC MAX
2LV-01128	VOL CONT TANK OUT ISO	11E	X6	2ABB	480V	.7	BD-C02F	L	0	10 SEC	L	0.5	10 SEC	K	0.5	10 SEC
2PV-2550A	PIPING PEN RM TO ATMOS	11E	X4	2ABB	480V	.2	BG-D01L	I	15.5	10 SEC	I	15.5	10 SEC	I	15.5	10 SEC
2HV-1975 *	AUX CCW RETRN ISO	11E	X5	2ABB	480V	.66	BD-L03G	M	>30.5	10 SEC	M	>30.5	10 SEC	M	>30.5	10 SEC
2HV-1979 *	AUX CCW SUPPLY ISO	11E	X5	2ABB	480V	.66	BD-L03J	M	>30.5	10 SEC	M	>30.5	10 SEC	M	>30.5	10 SEC
DISTR PANEL 2AYB1	DISTRIBUTION PANEL	11E	X3	2ABB	480V	15KVA	AA-F16A	N	0	C	N	0.5	C	N	0.5	C
2PV-3000	ATMOSPHERIC DUMP VALVE	11E	X5	2ABB	480V	1.5	BC-G03Q	K	0	20 SEC	K	0.5	20 SEC	K	0.5	20 SEC
2PV-3030	ATMOSPHERIC DUMP VALVE	11E	X5	2ABB	480V	1.5	BC-G03Q	K	0	20 SEC	K	0.5	20 SEC	K	0.5	20 SEC
2HV-11600	NSCW PUMP P4001 OUT	11E	X5	2ABB	480V	1.9	BD-K04Z	I	70.5	15 SEC	I	70.5	15 SEC	I	70.5	15 SEC
2HV-5137	AUX FD PP P4003 DISCH MOV	11E	X5	2ABB	480V	1.3	BC-F08C	L	0	10 SEC	L	0.5	10 SEC	L	0.5	10 SEC
2HV-5139	AUX FD PP P4003 DISCH MOV	11E	X5	2ABB	480V	1.3	BC-F08D	L	0	10 SEC	L	0.5	10 SEC	L	0.5	10 SEC
PNL 2AYC1 (NOTE 20)	120/240V DISTRIB PANEL	11E	X3	2ABC	480V	10KVA	AA-F03A	N	0	C	N	0.5	C	N	0.5	C
21532B7001M01	CBSF BATT RM EXH FAN	11E	X4	2ABC	480V	1.5	BG-C04N	L	0	C	L	0.5	C	MM	0.5	C
21532B7003M01	CBSF BATT RM EXH FAN (SPARE)	11E	X4	2ABC	480V	1.5	BG-C04G	L	0	C	L	0.5	C	MM	0.5	C
21532A7001M01	CBSF ELEC EQUIP RM A/C	11E	X4	2ABC	480V	40	BG-C04A	L	0	C	L	0.5	C	MM	0.5	C
21540B7005M01 *	TB AB ELEC TUNNEL VENT FAN	11E	X4	2ABB	480V	10.	BG-K01E	MM	0	C	MM	0.5	C	MM	0.5	C
21539A7001M01 NOTE 20	CB AUX RELAY RM A C	11E	X4	2ABC	480V	2	BG-C07M	L	0	C	L	0.5	C	MM	0.5	C
21807Y310	REG XFMR 2ABC09RX	11E	X3	2ABC	480V	7.5KVA	AA-G01A	N	0	C	N	0.5	C	N	0.5	C
21808T3116	LTG ISOLATION XFMR 2ABC23RX	11E	X3	2ABC	480V	15KVA	AA-F03A	N	0	C	N	0.5	C	N	0.5	C
21807Y3RX25	ROD POS IND CAB ISO XFMR 2ABC20RX	11E	X3	2ABC	480V	7.5KVA	AA-G05B	N	0	C	N	0.5	C	N	0.5	C
2HV-2564A	CTB COOLING UNIT (DAMPER)	11E	X4	2ABC	480V	.13	BG-B03X	M	>30.5	10 SEC	M	>30.5	10 SEC	M	>30.5	10 SEC
2HV-2564B	CTB COOLING UNIT (DAMPER)	11E	X4	2ABC	480V	.13	BG-B03X	M	>30.5	10 SEC	M	>30.5	10 SEC	M	>30.5	10 SEC
2HV-12742	CBSF BATTERY RM EXH	11E	X4	2ABC	480V	.2	BG-C04S	I	0	10 SEC	I	0.5	10 SEC	I	0.5	10 SEC
2HV-2628A	CTB NORM PURGE EXH ISO	11E	X5	2ABC	480V	1.33	BG-B04G	L	0	10 SEC	L	0.5	10 SEC	M	>30.5	10 SEC
2HV-12748	CBSF BATTERY RM FAN (SPARE)	11E	X4	2ABC	480V	.2	BG-C04C	I	0	10 SEC	I	0.5	10 SEC	I	0.5	10 SEC
2HV-8808C	ACCUM LOOP NO. 3	11E	X6	2ABC	480V	10.3	BD-D02T	L	0	10 SEC	L	0.5	10 SEC	K	0.5	10 SEC
2HV-19055 *	THERM BARR CW RCP 003	11E	X4	2ABC	480V	0.7	BD-L03M	K	0	10 SEC	K	0.5	10 SEC	K	0.5	10 SEC
2HV-19057 *	THERM BARR CW RCP 004	11E	X4	2ABC	480V	0.7	BD-L03N	K	0	10 SEC	K	0.5	10 SEC	K	0.5	10 SEC
2HV-8146	CHARG TO REAC COOL SYS ISO	11E	X6	2ABC	480V	0.7	BD-C03T	M	>30.5	10 SEC	M	>30.5	10 SEC	M	>30.5	10 SEC

NOTES:

1.) LOSS OF OFFSITE POWER (LOP) IS DEFINED AS A LOSS OF VOLTAGE ON THE 4.16KV BUS.

2.)
a. TIME T=0 SECONDS IS DEFINED AS THE TIME THE DIESEL GENERATOR BREAKER IS CLOSED FOR ALL LOP CONDITIONS AND THE TIME THE SI SIGNAL IS RECEIVED IN THE SF SEQUENCER WITH PREFERRED OFFSITE SOURCE AVAILABLE TO THE 4.16KV BUS.

b. DURING LOP CONDITIONS THE MAXIMUM TIME AFTER THE D.G. RECEIVES THE START SIGNAL TO THE FIRST LOAD STEP IS 10 SECONDS. THIS 10 SECOND INTERVAL INCLUDES A MAXIMUM OF 9.5 SECONDS FOR THE DIESEL GENERATOR TO START AND COME UP TO RATED VOLTAGE AND FREQUENCY PLUS 0.5 SECONDS, AFTER THE DIESEL GENERATOR BREAKER CLOSES, TO ENERGIZE THE UNLOADED 480V LOADCENTER TRANSFORMERS.

3.)
a. THE 4.16KV BREAKERS SUPPLYING 2NB01 AND 2NB10 WILL BE TRIPPED DURING SI CONDITIONS BY ESF. POWER CAN BE RESTORED MANUALLY TO BUSSES 2NB01 AND 2NB10 UNDER ADMINISTRATIVE PROCEDURE AFTER THE SI SIGNAL HAS BEEN MANUALLY OVERRIDDEN FOR THIS 4.16KV BREAKER.

b. DURING LOP CONDITIONS AND SUBSEQUENT SI, ALL BUSSES (EXCEPT 2NB01, 2NB15, 2NB10, 2NB9, 2NB0 AND 2NB1) WILL HAVE POWER AVAILABLE FOR LOADING 0.5 SECONDS AFTER THE DIESEL GENERATOR BREAKER CLOSES.

c. DURING LOP CONDITIONS, ALL BUSSES WILL HAVE POWER AVAILABLE FOR LOADING 0.5 SECONDS AFTER THE DIESEL GENERATOR BREAKER CLOSES.

4.)
a. C MEANS CONTINOUS, S MEANS STANDBY

b. UNLESS OTHERWISE INDICATED MOV'S ARE ASSUMED TO OPERATE FOR 10 SECONDS ONLY.

5.) THIS PUMP WILL BE SEQUENCED ON ONLY IF ONE OR BOTH OF THE PRIMARY PUMPS FAIL TO START ON THE PREVIOUSLY SEQUENCED STEP.

6.) THE SF SEQUENCER WILL ONLY PERMIT THIS LOAD TO START FOR 1 SECOND PERIODS OF TIME AT THE BEGINNING OF THE INDICATED SEQUENCE STEP, ALL SUBSEQUENT STEPS AND AT ANYTIME AFTER 30.5 SECONDS.

7.) THE FIRST LOAD STEP WILL OCCUR (WITH PREFERRED OFFSITE SOURCE AVAILABLE) 0.5 SECONDS AFTER THE SI SIGNAL IS RECEIVED AT THE SF SEQUENCER.

10.) UNDER SI CONDITIONS,THESE LOADS ARE SEQUENCED ON AT LOW SPEED ONLY. FOR LOP CONDITIONS THEY ARE SEQUENCED ON AT HIGH SPEED ONLY.

11.) THESE LOADS ARE INTERLOCKED WITH OTHER LOADS,WHICH ARE BLOCKED BY SEQUENCER,UNTIL 30.5 SECONDS.

12.) TRAIN B SIMILAR EXCEPT WHERE NOTED BY ASTERISK (*) OR IN TRAIN B TABLE (SEE NOTES 18,19,20 & 21)

13.) SI MEANS SAFETY INJECTION SYSTEM SIGNAL ACTUATED.

14.) THIS LOAD FED FROM BREAKER CLOSED ONLY DURING STARTUP OF THE LOAD.

15.) SEQUENCER PROVIDES MOTOR AUTO-START CIRCUIT WITH START SIGNAL AT 30.5 SECOND STEP. HOWEVER MOTOR WILL START AT 50.5 SECONDS DUE TO AN ADDITIONAL TIME DELAY OF 20 SECONDS BY AGASTAT TIME DELAY RELAY IN THE AUTO-START CKT.

16.)
a. SI PROVIDES CB ESF CHILLER WATER PUMP AUTO-START CIRCUIT WITH START SIGNAL. HOWEVER, PUMP MOTOR START WILL BE DELAYED APPROXIMATELY 60 SECONDS DUE TO ADDITION OF AGASTAT TIME DELAY RELAY ON THE AUTO-START CIRCUIT.

b. CB ESF CHILLER PURGE COMP. MTR. IS INTERLOCKED WITH THE USF CHILLER COMPRESSOR WHICH IS BLOCKED BY THE SEQUENCER UNTIL 30.5 SECONDS.

c. CB ESF CHILLER OIL PUMP MOTOR IS INTERLOCKED WITH ESF CHILLER CHILLED WATER FLOW SWITCH. THIS SWITCH OPERATES DUE TO FLOW FROM THE CB ESF CHILLED WATER PUMP APPROXIMATELY 60 SECONDS AFTER THE SIGNAL IS INITIATED.

17.) FAN 2-1561-N7-001 WILL LOAD SHED BUT WILL NOT AUTO-START UNLESS A CVI SIGNAL IS PRESENT. HEATER 2-1561-N7-001-H01 IS INTERLOCKED WITH FAN 2-1561-N7-001 AND IS ALSO PROCESS CONTROLLED.

18.) FAN 2-1531-B7-005 IS DISABLED AND ABANDONED IN PLACE.

19.) THOSE LOADS MARKED BY AN ASTERISK (*) ARE UNIQUE TO THEIR PARTICULAR TRAIN AND DO NOT HAVE AN EQUIVALENT OPPOSITE TRAIN LOAD.

20.) THESE LOADS DIFFER FROM THEIR CORRESPONDING OPPOSITE TRAIN LOAD. BOTH LOADS ARE LISTED UNDER THEIR RESPECTIVE TRAIN.

21.) TRAIN A AND B LOADS WHICH DIFFER BY .2 HP OR LESS ARE LISTED ONLY UNDER TRAIN A. ALL OTHER LISTED DATA IS SIMILIAR.

TABLE 1

INITIATING LETTER DESIGNATOR	TIME SEC TO OPERATE AFTER DIESEL GENERATOR BREAKER CLOSES	STARTING INITIATED BY
K	0.5	PROCESS DEVICES (THERMOSTATS, PRESSURE SWITCHES, ETC.)
L	0.5	ACCIDENT SIGNAL (SI) OR LOP
M	>30.5	MANUAL (ASSUME NO MANUAL ACTIONS WILL OCCUR UNTIL SEQUENCE TIMING CYCLE IS COMPLETED)
N	0.5	PANELS & OTHER LOADS FED FROM BRKRS ONLY- WHICH REMAIN CLOSED
P	>30.5 (BLOCKED BY SEQUENCER)	PROCESS DEVICE
S	≤30.5	AUTOMATICALLY BY SEQUENCER CAN BE STOPPED MANUALLY ONLY AFTER 30.5 SEC
MM	0.5	MNL STARTED WITH MEMORY (SLIP OR MNTN START CONT) LOAD WILL RE-START UPON RESTORATION OF POWER
I	VARIOUS	INTERLOCKED WITH OTHER LOADS

NUCLEAR SAFETY RELATED [A] [B]

SOUTHERN COMPANY SERVICES, INC.
BIRMINGHAM, ALABAMA

GEORGIA POWER COMPANY
ALVIN W. VOGTLE NUCLEAR PLANT

DIESEL GENERATOR
2A AND TRAIN "A" AC BUSSES
LOADING TABLE - PAGE 1 OF 2

SCALE: NONE | DRAWING NO. 2X3D-AA-K02A | REV. 12

JOB NO.10604

SIZE E 34X44

NO.	REVISIONS	DATE	DR	CHK	APPV	DTL
1	INCORP. PER ABN-36789	11-26-01	CD	EGG	MWD	X

THIS DOCUMENT CONTAINS PROPRIETARY, CONFIDENTIAL, AND/OR TRADE SECRET INFORMATION OF THE SUBSIDIARIES OF THE SOUTHERN COMPANY OR OF THIRD PARTIES. IT IS INTENDED FOR USE ONLY BY EMPLOYEES OF, OR AUTHORIZED CONTRACTORS OF, THE SUBSIDIARIES OF THE SOUTHERN COMPANY. UNAUTHORIZED POSSESSION, USE, DISTRIBUTION, COPYING, DISSEMINATION, OR DISCLOSURE OF ANY PORTION HEREOF IS PROHIBITED.

EQUIPMENT TAG NUMBER	EQUIPMENT DESCRIPTION	PROJECT CLASSIFICATION (ELECTRICAL SYSTEM)	PROCUREMENT SPECIFICATION	BUS NUMBER	BUS VOLTAGE	NAMEPLATE RATING HP (OR KW)	REFERENCE DWG. 2X3D-	LOSS OF COOLANT ACCIDENT,(SI), PREFERRED OFFSITE SOURCE AVAILABLE				LOSS OF OFFSITE POWER & SUBSEQUENT SI				LOSS OF OFFSITE POWER			
									MANUAL PROCESS, ACCT. OR SEQUENCER START SEE TABLE 1	TIME (SECONDS) TO START (NOTE 7)	RUNNING TIME AFTER START (NOTE 4)		MANUAL PROCESS, ACCT. OR SEQUENCER START SEE TABLE 1	TIME (SEC) TO START AFTER D-G BRKR IS CLOSED (NOTE 3b)	RUNNING TIME AFTER START (NOTE 4)		MANUAL PROCESS, ACCT. OR SEQUENCER START SEE TABLE 1	TIME (SEC) TO START AFTER D-G BRKR IS CLOSED (NOTE 3c)	RUNNING TIME AFTER START (NOTE 4)	
PNL 2AY01	120/240 DISTRIBUTION PANEL	11E	X3	2ABD	480V	15.0KVA	AA-F11A		N	0	C		N	0.5	C		N	0.5	C	
21555A7013M01	CHARGING PUMP ROOM COOLER	11E	X4	2ABD	480V	5.0	BG-D05N		I,K	0	C		I,K	0.5	C		I,K	0.5	C	
21555A7015M01	SIS PUMP ROOM COOLER	11E	X4	2ABD	480V	3.0	BG-D05R		I,K	0	C		I,K	0.5	C		I,K	0.5	C	
21555A7001M01	MCC ROOM COOLER	11E	X4	2ABD	480V	5.0	BG-D05A		L	0	C		L	0.5	C		K	0.5	C	
21555A7003M01	SWGR & MCC ROOM COOLER	11E	X4	2ABD	480V	2.0	BG-D05C		L	0	C		L	0.5	C		K	0.5	C	
21208P6006M01	BORIC ACID TRANSFER PUMP	11E	X6	2ABD	480V	20.8	BD-C01F		I	0	C		I	0.5	C		I	0.5	C	
21555A7009M01	CTMT SPRAY PUMP COOLER	11E	X4	2ABD	480V	3.0	BG-D05J		I,K	0	C		I,K	0.5	C		I,K	0.5	C	
21555A7007M01	RHR PUMP ROOM COOLER	11E	X4	2ABD	480V	5.0	BG-D05G		I,K	0	C		I,K	0.5	C		I,K	0.5	C	
21513P5HMAF01	CTMT H2 MONITORING PANEL	11E	X5	2ABD	480V	1.7KVA	AA-F11A		N	0	C		N	0.5	C		N	0.5	C	
2HV-2138	RC COOLING COIL OUT ISO	11E	X5	2ABD	480V	.13	BD-K04M		L	0	40SEC		L	0.5	40SEC		M	>30.5	40SEC	
2HV-1830	CTMT AIR COOLER CW OUT	11E	X5	2ABD	480V	.13	BD-K04V		L	0	30SEC		L	0.5	30SEC		M	>30.5	30SEC	
2LV-0112D	REFUEL W TK TO CHG PUMP	11E	X6	2ABD	480V	1.6	BD-C02H		L	0	15SEC		L	0.5	15SEC		K	0.5	15SEC	
2HV-8812A	RHR PUMP INLET	11E	X6	2ABD	480V	7.8	BD-E02E		M	>30.5	20SEC		M	>30.5	20SEC		M	>30.5	20SEC	
2HV-8110 •	CHG PUMP TO MINIFLO ISO	11E	X6	2ABD	480V	.7	BD-C03J		L	0	10SEC		L	0.5	10SEC		M	>30.5	10SEC	
2HV-8920	SI INLET B MINIFLO ISO	11E	X6	2ABD	480V	.7	BD-D02B		M	>30.5	10SEC		M	>30.5	10SEC		M	>30.5	10SEC	
2HV-8821A	RCS HT LEG LP 1/4HDR BYP	11E	X6	2ABD	480V	1.0	BD-D03D		M	>30.5	15SEC		M	>30.5	15SEC		M	>30.5	15SEC	
2HV-8802A	RCS HT LEG LP 1/4HDR ISO	11E	X6	2ABD	480V	1.0	BD-D02G		M	>30.5	10SEC		M	>30.5	10SEC		M	>30.5	10SEC	
2HV-8923A	SI PUMP INLET	11E	X6	2ABD	480V	1.0	BD-D03F		M	>30.5	15SEC		M	>30.5	15SEC		M	>30.5	15SEC	
2HV-8716A	RHR NO. 1 COLD LEG ISO	11E	X6	2ABD	480V	1.6	BD-E02N		M	>30.5	15SEC		M	>30.5	15SEC		M	>30.5	15SEC	
2HV-8807A	SI PUMP SUCTION HDR	11E	X6	2ABD	480V	.7	BD-D02P		M	>30.5	15SEC		M	>30.5	15SEC		M	>30.5	15SEC	
2HV-1806	CTMT AIR COOLER CW INLET	11E	X5	2ABD	480V	.13	BD-K04N		L		30SEC		L	0.5	30SEC		M	>30.5	30SEC	
2HV-8811A	CTMT SUMP ISO	11E	X6	2ABD	480V	7.8	BD-E03F		K,L		20SEC		K,L	0.5	20SEC		M	>30.5	20SEC	
2HV-9003A	CTMT SPRAY PUMP SUCTION	11E	X6	2ABD	480V	2.0	BD-J02J		M	>30.5	15SEC		M	>30.5	15SEC		M	>30.5	15SEC	
2HV-8814	SI PUMP MINIFLO ISO	11E	X6	2ABD	480V	.7	BD-D03C		M	>30.5	10SEC		M	>30.5	10SEC		M	>30.5	10SEC	
2HV-8801A	BORON INJ TK DISC ISO	11E	X6	2ABD	480V	3.2	BD-D02E		L	0	10SEC		L	0.5	10SEC		M	>30.5	10SEC	
2FV-0610	RHR PUMP 1 MINIFLO	11E	X6	2ABD	480V	.7	BD-E02C		K	0	10SEC		K	0.5	10SEC		K	0.5	10SEC	
2HV-9017A	CSP RFL WTR STOR TK IN	11E	X6	2ABD	480V	1.9	BD-J02G		M	>30.5	15SEC		M	>30.5	15SEC		M	>30.5	15SEC	
2HV-8924 •	CHG PUMP HDR TO/FR SIS PA	11E	X6	2ABD	480V	1.0	BD-C04V		M	>30.5	15SEC		M	>30.5	15SEC		M	>30.5	15SEC	
2HV-9002A	CSP SUCTION	11E	X6	2ABD	480V	2.0	BD-J02E		M	>30.5	15SEC		M	>30.5	15SEC		M	>30.5	15SEC	
2HV-1808	CTMT AIR COOL CW INLET	11E	X5	2ABD	480V	.13	BD-K04U		L	0	30SEC		L	0.5	30SEC		M	>30.5	30SEC	
2HV-9001A	CTMT SPRAY HDR ISO	11E	X6	2ABD	480V	1.6	BD-J02C		L	0	15SEC		L	0.5	15SEC		M	>30.5	15SEC	
2HV-1822	CTMT AIR COOL CW OUTLET	11E	X5	2ABD	480V	.13	BD-K04P		L	0	30SEC		L	0.5	30SEC		M	>30.5	30SEC	
2HV-2134	REACTOR CAVITY CC INLET ISO	11E	X5	2ABD	480V	.13	BD-K04L		L	0	40SEC		L	0.5	40SEC		M	>30.5	40SEC	
2HV-8485A	CHARGING PUMP A DISCH	11E	X6	2ABD	480V	1.0	BD-C05A		M	>30.5	10SEC		M	>30.5	10SEC		M	>30.5	10SEC	
2HV-8471A	CHARGING PUMP A SUCTION	11E	X6	2ABD	480V	.7	BD-C05C		M	>30.5	10SEC		M	>30.5	10SEC		M	>30.5	10SEC	
PNL 2AYE1(NOTE 20)	120/240V DISTRIBUTION PANEL	11E	X3	2ABE	480V	15KVA	AA-F24A		N	0	C		N	0.5	C		N	0.5	C	
21516B7001M01	CTB POST LOCA CAV PURGE UNIT	11E	X4	2ABE	480V	5	BG-B02X		L	0	C		L	0.5	C		MM	0.5	C	
21806B3CAB	BATTERY CHARGER 2AD1CB	11E	X3	2ABE	480V	100KVA	AA-H01A		N	0	C		N	0.5	C		N	0.5	C	
21806B3CCA (NOTE 20)	BATTERY CHARGER 2CD1CA	11E	X3	2ABE	480V	75KVA	AA-H04A		N	0	C		N	0.5	C		N	0.5	C	
2HV-2624A	CTB POST LOCA PURGE EXH ISO	11E	X5	2ABE	480V	0.13	BG-B04A		L	0	20SEC		L	0.5	20SEC		M	>30.5	20SEC	
2HV-8701A	RHR LOOP 1 INLET ISO	11E	X6	2ABE	480V	2.6	BD-E02G		M	>30.5	120SEC		M	>30.5	120SEC		M	>30.5	120SEC	
2HV-8112	RCP SEAL WATER ISO	11E	X6	2ABE	480V	0.70	BD-C03L		L	0	15SEC		L	0.5	15SEC		M	>30.5	15SEC	
2HV-9380A	CTMT ATMOS UNIT SERV AIR	11E	X4	2ABE	480V	0.33	BH-R01D		M	>30.5	10SEC		M	>30.5	10SEC		M	>30.5	10SEC	
2HV-8808A	ACCUM LOOP 1 ISO	11E	X6	2ABE	480V	10.3	BD-D02R		L	0	10SEC		L	0.5	10SEC		K	0.5	10SEC	
2HV-2626A	CTB NORM PURGE SPLY ISO	11E	X5	2ABE	480V	1.33	BG-B04E		L	0	10SEC		L	0.5	10SEC		M	>30.5	10SEC	
2HV-2582A	CTB CLR A7001 UNIT (DAMPER)	11E	X4	2ABE	480V	.13	BG-B03V		M	>30.5	10SEC		M	>30.5	10SEC		M	>30.5	10SEC	
2HV-2582B	CTB CLR A7002 UNIT (DAMPER)	11E	X4	2ABE	480V	.13	BG-B03V		M	>30.5	10SEC		M	>30.5	10SEC		M	>30.5	10SEC	
2HV-19051 •	THERM BARR CW RCP 001	11E	X4	2ABE	480V	0.70	BD-L03K		K	0	10SEC		K	0.5	10SEC		K	0.5	10SEC	
2HV-19053 •	THERM BARR CW RCP 002	11E	X4	2ABE	480V	0.70	BD-L03L		K	0	10SEC			0.5	10SEC		K	0.5	10SEC	
2HV-8000A	PRESSURIZER POWER RELIEF ISO	11E	X6	2ABE	480V	2.0	BD-B02A		K	0	10SEC		K	0.5	10SEC		K	0.5	10SEC	
PNL 2AYF1	120/240V DISTRIBUTION PANEL	11E	X3	2ABF	480V	15KVA	AA-F36A		N	0	C		N	0.5	C		N	0.5	C	
21593B7001M01	AUX FWP HSE FAN	11E	X4	2ABF	480V	5.0	BG-G03A		K	0	C		K	0.5	C		MM	0.5	C	
22403P4001M01	DSL OIL STORAGE TK PUMP	11E	X4	2ABF	480V	1.5	BH-C01X		K	0	C		K	0.5	C		K	0.5	C	
22403P4002M01	DSL OIL STORAGE TK PUMP	11E	X4	2ABF	480V	1.5	BH-G01Z		K	0	C		K	0.5	C		K	0.5	C	
21540B7001M01	DSL TUNNEL VENT FAN	11E	X4	2ABF	480V	3.0	BG-K01C		K	0	C		K	0.5	C		K	0.5	C	
2HV-12051	DGB FAN B7003 DAMPER	11E	X4	2ABF	480V	.2	BG-F01M		I NOTE 11	>30.5	10SEC		I NOTE 11	>30.5	10SEC		I NOTE 11	>30.5	10SEC	
21806T3114	LTG. ISO XFMR 2ABF13RX	11E	X3	2ABF	480V	15KVA	AA-F36A		N	0	C		N	0.5	C		N	0.5	C	
2HV-5119	COND STOR TK TO PUMP	11E	X5	2ABF	480V	.25	BC-F02D		M	>30.5	10SEC		M	>30.5	10SEC		M	>30.5	10SEC	
2HV-12006	AUX FWP RM INLET	11E	X4	2ABF	480V	.2	BG-G01M		I	0	10SEC		I	0.5	10SEC		I	0.5	10SEC	
2HV-12050	DGB FAN B7001 DAMPER	11E	X4	2ABF	480V	.2	BG-F01M		I NOTE 11	>30.5	10SEC		I NOTE 11	>30.5	10SEC		I NOTE 11	>30.5	10SEC	

EQUIPMENT TAG NUMBER	EQUIPMENT DESCRIPTION	PROJECT CLASSIFICATION (ELECTRICAL SYSTEM)	PROCUREMENT SPECIFICATION	BUS NUMBER	BUS VOLTAGE	NAMEPLATE RATING HP (OR KW)	REFERENCE DWG. 2X3D-	LOSS OF COOLANT ACCIDENT,(SI), PREFERRED OFFSITE SOURCE AVAILABLE				LOSS OF OFFSITE POWER & SUBSEQUENT SI				LOSS OF OFFSITE POWER			
									MANUAL PROCESS, ACCT. OR SEQUENCER START SEE TABLE 1	TIME (SECONDS) TO START (NOTE 7)	RUNNING TIME AFTER START (NOTE 4)		MANUAL PROCESS, ACCT. OR SEQUENCER START SEE TABLE 1	TIME (SEC) TO START AFTER D-G BRKR IS CLOSED (NOTE 3b)	RUNNING TIME AFTER START (NOTE 4)		MANUAL PROCESS, ACCT. OR SEQUENCER START SEE TABLE 1	TIME (SEC) TO START AFTER D-G BRKR IS CLOSED (NOTE 3c)	RUNNING TIME AFTER START (NOTE 4)	
2FV-5155	AUX FWP P4003 MINIFLO	11E	X5	2ABF	480V	.70	BC-F04B		K	0	10SEC		K	0.5	10SEC		K	0.5	10SEC	
2HV-12052	DGB FAN B7005 DAMPER	11E	X4	2ABF	480V	.2	BG-F01P		NOTE 11	>30.5	10SEC		NOTE 11	>30.5	10SEC		NOTE 11	>30.5	10SEC	
21808T3020	LTG XFMR 2NBS47X	62E	X3	2NBS	480V	15KVA	AA-F28A		SEE NOTE 3a	>30.5	C		SEE NOTE 3a	>30.5	C		N	10.5	C	
21807Y3RX24	REG XFMR 2NBS32RX	62E	X3	2NBS	480V	15KVA	AA-G01B		SEE NOTE 3a	>30.5	C		SEE NOTE 3a	>30.5	C		N	10.5	C	
PNL 2NYS1	120/240V DISTRIBUTION PANEL	62E	X3	2NBS	480V	10KVA	AA-F28A		SEE NOTE 3a	>30.5	C		SEE NOTE 3a	>30.5	C		N	10.5	C	
21509B7001M01	CTB CRDM CLG UNIT FAN	62E	X6	2NBS	480V	40.0	BG-B02A		SEE NOTE 3a	>30.5	C		SEE NOTE 3a	>30.5	C		M	>30.5	C	
21509B7003M01	CTB CRDM CLG UNIT FAN	62E	X6	2NBS	480V	40.0	BG-B02C		SEE NOTE 3a	>30.5	C		SEE NOTE 3a	>30.5	C		M	>30.5	C	
21807Y3I4	INVERTER 2ND314	62E	X3	2NBS	480V	10KVA	AA-F28A		SEE NOTE 3a	>30.5	C		SEE NOTE 3a	>30.5	C		N	10.5	C	
21807Y3RX27 •	REG TRANSFORMER 2NBS39RX	62E	X3	2NBS	480V	15KVA	AA-F28A		SEE NOTE 3a	>30.5	S		SEE NOTE 3a	>30.5	S		N	10.5	S	
21512B7001M01	CTB REACTOR SUPPORT COOLING UNIT	62E	X4	2NBS	480V	15.0	BG-B03P		SEE NOTE 3a	>30.5	C		SEE NOTE 3a	>30.5	C		MM	10.5	C	
21512B7003M01	CTB REACTOR SUPPORT COOLING UNIT	62E	X4	2NBS	480V	15.0	BG-B03R		SEE NOTE 3a	>30.5	C		SEE NOTE 3a	>30.5	C		MM	10.5	C	
21556B7003M01	RESTRAINT COOLING FAN	62E	X4	2NBS	480V	3.0	BG-D03B		SEE NOTE 3a	>30.5	C		SEE NOTE 3a	>30.5	C		MM	10.5	C	
21556B7004M01	RESTRAINT COOLING FAN	62E	X4	2NBS	480V	3.0	BG-D03C		SEE NOTE 3a	>30.5	C		SEE NOTE 3a	>30.5	C		MM	10.5	C	
21556B7007M01	RESTRAINT COOLING FAN	62E	X4	2NBS	480V	3.0	BG-D03F		SEE NOTE 3a	>30.5	C		SEE NOTE 3a	>30.5	C		MM	10.5	C	
21556B7008M01	RESTRAINT COOLING FAN	62E	X4	2NBS	480V	3.0	BG-D03G		SEE NOTE 3a	>30.5	C		SEE NOTE 3a	>30.5	C		MM	10.5	C	
21808T3022	LTG TRANSFORMER 2NBS11X	62E	X3	2NBS	480V	15KVA	AA-F28A		SEE NOTE 3a	>30.5	C		SEE NOTE 3a	>30.5	C		N	10.5	C	
21808T3038	LTG TRANSFORMER 2NBS12X	62E	X3	2NBS	480V	30KVA	AA-F28A		SEE NOTE 3a	>30.5	C		SEE NOTE 3a	>30.5	C		N	10.5	C	
21808T3053	LTG TRANSFORMER 2NBS14X	62E	X3	2NBS	480V	45KVA	AA-F28A		SEE NOTE 3a	>30.5	C		SEE NOTE 3a	>30.5	C		N	10.5	C	
21808T3086	LTG TRANSFORMER 2NBS15X	62E	X3	2NBS	480V	45KVA	AA-F28A		SEE NOTE 3a	>30.5	C		SEE NOTE 3a	>30.5	C		N	10.5	C	
21808T3069	LTG TRANSFORMER 2NBS23X	62E	X3	2NBS	480V	45KVA	BA-E15O		SEE NOTE 3a	>30.5	C		SEE NOTE 3a	>30.5	C		N	10.5	C	
21807Y3RX16 •	REG TRANSFORMER 2NBS18RX	62E	X3	2NBS	480V	30KVA	AA-G01B		SEE NOTE 3a	>30.5	C		SEE NOTE 3a	>30.5	C		N	10.5	C	
21807Y3RX18	REG TRANSFORMER 2NBS21RX	62E	X3	2NBS	480V	30KVA	AA-G01B		SEE NOTE 3a	>30.5	C		SEE NOTE 3a	>30.5	C		N	10.5	C	
21807Y312	INVERTER 2ND312	62E	X6	2NBS	480V	7.5KVA	AA-H07A		SEE NOTE 3a	>30.5	C		SEE NOTE 3a	>30.5	C		N	10.5	C	
21228P4001M01	REAC MAKE-UP WTR PP 005	62E	X4	2NBS	480V	40.0	BG-L05A		SEE NOTE 3a	>30.5	C		SEE NOTE 3a	>30.5	C		K	10.5	C	
21817U3007B	CONT H_2 MON HEAT TRACE PNL(STBY)	62E	X3	2NBS	480V	15KW	AA-F28A		SEE NOTE 3a	>30.5	C		SEE NOTE 3a	>30.5	C		N	10.5	C	
2HV-12646	CTB REACTOR SUPPLY COOLING UNIT	62E	X4	2NBS	480V	.13	BG-B05U		SEE NOTE 3a	>30.5	10SEC		SEE NOTE 3a	>30.5	10SEC		I	10.5	10SEC	
2HV-12644	CTB REACTOR SUPPLY COOLING UNIT	62E	X4	2NBS	480V	.13	BG-B05S		SEE NOTE 3a	>30.5	10SEC		SEE NOTE 3a	>30.5	10SEC		I	10.5	10SEC	
2HV-8098 •	EXCESS LTDWN HT EXCH INLET	62E	X6	2NBS	480V	.7	BD-C05R		SEE NOTE 3a	>30.5	10SEC		SEE NOTE 3a	>30.5	10SEC		M	>30.5	10SEC	
21817U3001A	HEAT TRACE SI SYSTEM	62E	X3	2NBS	480V	15KW	AA-F28A		SEE NOTE 3a	>30.5	C		SEE NOTE 3a	>30.5	C		K	10.5	C	
21817U3003A	HEAT TRACE (NORMAL) CVCS	62E	X3	2NBS	480V	15KW	AA-F28A		SEE NOTE 3a	>30.5	C		SEE NOTE 3a	>30.5	C		K	10.5	C	
21817U3005A	HEAT TRACE	62E	X3	2NBS	480V	15KW	AA-F28A		SEE NOTE 3a	>30.5	C		SEE NOTE 3a	>30.5	C		K	10.5	C	
21817U3002A	AUX HEAT TRACE PNL (LVL A)	62E	X3	2NBS	480V	15KW	AA-F28A		SEE NOTE 3a	>30.5	C		SEE NOTE 3a	>30.5	C		K	10.5	C	
22403G4001H01	JACKET WTR HTR	62E	X4	2NB1	480V	75KW	AA-F40A		SEE NOTE 3a	>30.5	C		SEE NOTE 3a	>30.5	C		K	10.5	C	
22403G4001H02	LUBE OIL HTR	62E	X4	2NB1	480V	45KW	AA-F40A		SEE NOTE 3a	>30.5	C		SEE NOTE 3a	>30.5	C		K	10.5	C	
22403G4001E01	AIR COMPRESSOR AFTERCOOLER	62E	X4	2NB1	480V	.75	AA-F40A		SEE NOTE 3a	>30.5	C		SEE NOTE 3a	>30.5	C		K	10.5	C	
22403G4001E02	AIR COMPRESSOR AFTERCOOLER	62E	X4	2NB1	480V	.75	AA-F40A		SEE NOTE 3a	>30.5	C		SEE NOTE 3a	>30.5	C		K	10.5	C	
22403G4001M07	LUBE OIL CIRC PUMP	62E	X4	2NB1	480V	15	AA-F40A		SEE NOTE 3a	>30.5	C		SEE NOTE 3a	>30.5	C		K	10.5	C	
22403G4001M04	JACKET WTR CIRC PUMP	62E	X4	2NB1	480V	3.0	AA-F40A		SEE NOTE 3a	>30.5	C		SEE NOTE 3a	>30.5	C		K	10.5	C	
22403G4001M01	AIR START COMPRESSOR	62E	X4	2NB1	480V	30.0	AA-F40A		SEE NOTE 3a	>30.5	C		SEE NOTE 3a	>30.5	C		K	10.5	C	
22403G4001M02	AIR START COMPRESSOR	62E	X4	2NB1	480V	30.0	AA-F40A		SEE NOTE 3a	>30.5	C		SEE NOTE 3a	>30.5	C		K	10.5	C	
PNL. 2NYI1	120/240 V DIST. PNL.	62E	X3	2NB1	480V	10KVA	AA-F40A		SEE NOTE 3a	>30.5	C		SEE NOTE 3a	>30.5	C		K	10.5	C	
22403G4001G01	GEN. SP. HTR.	62E	X4	2NB1	480V	7.2KW	AA-F40A		SEE NOTE 3a	>30.5	C		SEE NOTE 3a	>30.5	C		K	10.5	C	
TRAIN B LOADS (SEE NOTES 19 & 21)																			
21539A7002M01 NOTE 20	CB AUX RELAY RM AC UNIT	11E	X4	2BBA	480V	2.0	BG-C07N		L	0	C		L	0.5	C		MM	0.5	C	
21806B3CDA NOTE 20	BATTERY CHARGER 2DD1CA	11E	X3	2BBA	480V	50KVA	AA-G01A		N	0	C		N	0.5	C		N	0.5	C	
DISTR PNL 2BYA1	120/240 DISTRIBUTION PANEL	11E	X3	2BBA	480V	10KVA	AA-F19A		N	0	C		N	0.5	C		N	0.5	C	
2HV-8840 •	RHR HOT LEG INJECT CROSSOVER	11E	X6	2BBB	480V	10.3	BD-D03J		M	>30.5	20SEC		M	>30.5	20SEC		M	>30.5	20SEC	
2HV-8111B •	CHG PMP MINI FLOW ISO	11E	X6	2BBB	480V	.7	BD-C05L		L	0	10SEC		L	0.5	10SEC		M	>30.5	10SEC	
PNL 2BYC1(NOTE 20)	120V DISTRIBUTION PANEL	11E	X3	2BBC	480V	15KVA	AA-F04A		N	0	C		N	0.5	C		N	0.5	C	
2HV-8111A •	CHG PMP MINI FLOW ISO.	11E	X6	2BBD	480V	.7	BD-C03K		L	0	10SEC		L	0.5	10SEC		M	>30.5	10SEC	
2HV-8438 •	CHARGING PMP DISCH	11E	X6	2BBD	480V	1.0	BD-C05P		M	>30.5	10SEC		M	>30.5	10SEC		M	>30.5	10SEC	
2HV-8103A •	RCP 1 SEAL WATER INLET	11E	X6	2BBD	480V	.7	BD-C04L		M	>30.5	10SEC		M	>30.5	10SEC		M	>30.5	10SEC	
2HV-8103B •	RCP 2 SEAL WATER INLET	11E	X6	2BBD	480V	.7	BD-C04H		M	>30.5	10SEC		M	>30.5	10SEC		M	>30.5	10SEC	
21806B3CDB NOTE 20	BATTERY CHARGER 2DD1CB	11E	X3	2BBE	480V	50KVA	AA-H05A		N	0	C		N	0.5	C		N	0.5	C	
2HV-8103C •	RCP 3 SEAL WATER INLET	11E	X6	2BBE	480V	.7	BD-C04J		M	>30.5	10SEC		M	>30.5	10SEC		M	>30.5	10SEC	
2HV-8103D •	RCP 4 SEAL WATER INLET	11E	X6	2BBE	480V	.66	BD-C04U		M	>30.5	10SEC		M	>30.5	10SEC		M	>30.5	10SEC	
2HV-3548 •	RCS HOT LEG SAMPLE	11E	X5	2BBE	480V	.13	BD-N01N		L	0	15SEC		L	0.5	15SEC		M	>30.5	15SEC	
2HV-2041 •	THERMAL BARRIER CW RETURN	11E	X6	2BBE	480V	1.0	BD-L03P		K	0	10SEC		K	0.5	10SEC		K	0.5	10SEC	
PNL 2BYE1(NOTE 20)	120/240V DISTRIBUTION PANEL	11E	X3	2BBE	480V	10KVA	AA-F25A		N	0	C		N	0.5	C		N	0.5	C	
2HV-3500 •	RCS HOT LEG SAMPLE	62E	X5	2NBR	480V	.13	BD-N01A		SEE NOTE 3a	>30.5	15SEC		SEE NOTE 3a	>30.5	15SEC		M	>30.5	15SEC	
21808T3003	LTG. TRANSFORMER 2NBR11X	62E	X3	2NBR	480V	30KVA	AA-F27A		SEE NOTE 3a	>30.5	C		SEE NOTE 3a	>30.5	C		N	10.5	C	
21806B3CN3	BATTERY CHARGER 2ND2CA	62E	X3	2NBR	480V	45KVA	AA-H06A		SEE NOTE 3a	>30.5	C		SEE NOTE 3a	>30.5	C		N	10.5	C	
21541B7001M01	PASS PNL EXH AIR BOOSTER FAN	62E	X4	2NBR	480V	.33	BG-E01A		SEE NOTE 3a	>30.5	C		SEE NOTE 3a	>30.5	C		M	>30.5	C	
21807Y313	INVERTER 2ND313	62E	X3	2NBR	480V	7.5KVA	AA-H07A		SEE NOTE 3a	>30.5	C		SEE NOTE 3a	>30.5	C		N	0.5	C	
21807Y311	INVERTER 2ND311	62E	X3	2NBR	480V	30KVA	AA-H07B		SEE NOTE 3a	>30.5	C		SEE NOTE 3a	>30.5	C		N	0.5	C	
21817U3007A	CTMT H_2 MON HT TRACE PNL	62E	X3	2NBR	480V	30KVA	AA-F27A		SEE NOTE 3a	>30.5	C		SEE NOTE 3a	>30.5	C		K	0.5	C	
21301K4001M09 •	TURB GEAR MAIN DRIVE	62E	X4	2NB10	480V	40	BC-G52C		SEE NOTE 3a	>30.5	C		SEE NOTE 3a	>30.5	C		M	>30.5	C	
21307T4501M03 •	TURB GEAR LO RES TGDP	62E	X4	2NB10	480V	50	BC-L02A		SEE NOTE 3a	>30.5	C		SEE NOTE 3a	>30.5	C		M	>30.5	C	

FOR NOTES & TABLES SEE SHEET 1 DRAWING NO 2X3D-AA-K02A.

NUCLEAR SAFETY RELATED [A] [B] [Q]

THIS DOCUMENT CONTAINS PROPRIETARY, CONFIDENTIAL, AND/OR TRADE SECRET INFORMATION OF THE SUBSIDIARIES OF THE SOUTHERN COMPANY OR OF THIRD PARTIES. IT IS INTENDED FOR USE ONLY BY EMPLOYEES OF, OR AUTHORIZED CONTRACTORS OF, THE SUBSIDIARIES OF THE SOUTHERN COMPANY. UNAUTHORIZED POSSESSION, USE, DISTRIBUTION, COPYING, DISSEMINATION, OR DISCLOSURE OF ANY PORTION HEREOF IS PROHIBITED.

NO.	VERSIONS	DATE	DR	CHK	APPV
11.0	REVISED PER ABN 2081605401E003. VER.1.0	10/10/08	TSL	ELC	JMR

SOUTHERN COMPANY SERVICES, INC.
BIRMINGHAM, ALABAMA

GEORGIA POWER COMPANY
ALVIN W. VOGTLE NUCLEAR PLANT

DIESEL GENERATOR
2A AND TRAIN "A" AC BUSSES
LOADING TABLE - PAGE 2 OF 2

SCALE: NONE | DRAWING NO. 2X3D-AA-K02B | VER. 11.0

JOB NO.10604

SIZE E 34X44 | DWC CATEGORY: CRITICAL

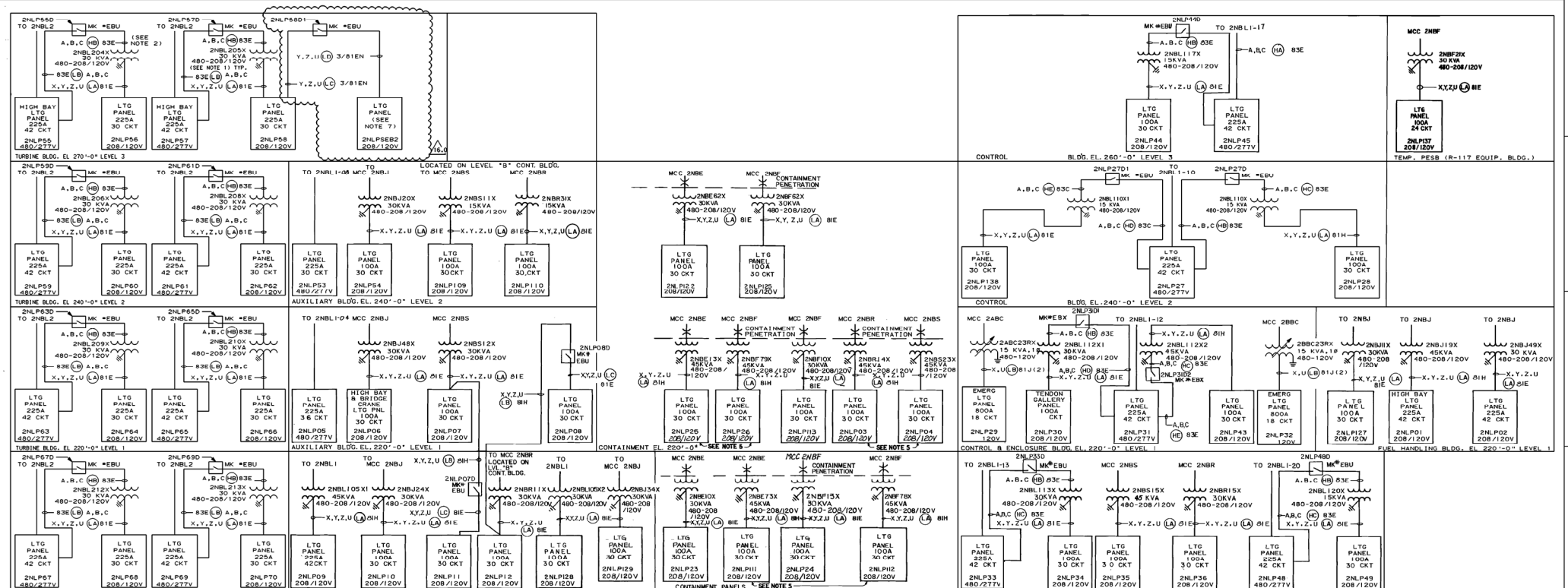

EQUIPMENT NUMBER	
XFMR EQPT LOC NO	XFMR PLANT TAG NO
2NBL204X	2-1808-T3-048
2NBL205X	2-1808-T3-044
2NBL206X	2-1808-T3-049
2NBL208X	2-1808-T3-045
2NBL209X	2-1808-T3-050
2NBL210X	2-1808-T3-046
2NBL212X	2-1808-T3-051
2NBJ48X	2-1808-T3-001
2NBS12X	2-1808-T3-038
2NBJ24X	2-1808-T3-002
2NBR11X	2-1808-T3-003
2NBK29X	2-1808-T3-052
2NBH04X	2-1808-T3-005
2NBS14X	2-1808-T3-053
2NBR12X	2-1808-T3-007
2NBH08X	2-1808-T3-008
2NBE10X	2-1808-T3-009
2NBF13X	2-1808-T3-010
2NBE13X	2-1808-T3-076
2NBF10X	2-1808-T3-012
2NBR14X	2-1808-T3-026
2NBS23X	2-1808-T3-069
2NBL117X	2-1808-T3-013
2NBR47X	2-1808-T3-019
2NBS47X	2-1808-T3-020
2NBJ11X	2-1808-T3-057
2NBJ34X	2-1808-T3-059
2NBL107X2	2-1808-T3-062
2NBH22X	2-1808-T3-063
2NBL109X2	2-1808-T3-065
2NBF62X	2-1808-T3-066
2NBE62X	2-1808-T3-068
2NBF21X	**2-1808-T3-112**

EQUIPMENT NUMBER	
XFMR EQPT LOC NO	XFMR PLANT TAG NO
2NBL110X	2-1808-T3-034
2NBL105X1	2-1808-T3-101
2NBL112X1	2-1808-T3-047
2NBL112X2	2-1808-T3-070
2NBL106X1	2-1808-T3-102
2NBJ19X	2-1808-T3-025
2NBJ49X	2-1808-T3-056
2NBL113X	2-1808-T3-067
2NBS15X	2-1808-T3-086
2NBR15X	2-1808-T3-004
2NBL120X	2-1808-T3-027
2NBL114X	2-1808-T3-011
2NBL115X	2-1808-T3-018
2NBL107X1	2-1808-T3-061
2NBL109X1	2-1808-T3-064
2NBG34X	2-1808-T3-043
2NBL213X	2-1808-T3-047
2NBQ34X	2-1808-T3-035
2NBJ20X	2-1808-T3-015
2NBS11X	2-1808-T3-022
2ABC23RX	2-1808-T3-116
2BBC23RX	2-1808-T3-113
2ABF13RX	2-1808-T3-114
2BBF13RX	2-1808-T3-115
2NBR31X	2-1808-T3-021
2NBZA31X	2-1808-T3-077
2NBH23X	2-1808-T3-071
2NBF78X	2-1808-T3-072
2NBR23X	2-1808-T3-073
2NBE73X	2-1808-T3-074
2NBF79X	2-1808-T3-075
2NBL105X2	2-1808-T3-058
2NBL106X2	2-1808-T3-060
2NB0902XA	2-1808-T3-110
2NB0902XB	2-1808-T3-111
2NB0914XA	2-1808-T3-107
2NB0914XB	2-1808-T3-108
2NB0914XC	2-1808-T3-109
2NBL110X1	2-1808-T3-117

EQUIPMENT NUMBER		
LTG PANEL EQPT LOC NO	LTG PANEL PLANT TAG NO	PNL SCHED DWG NO
2NLP55	2-1808-Q3-L55	AX3D0011
2NLP56	2-1808-Q3-L56	AX3D0011
2NLP57	2-1808-Q3-L57	AX3D0011
2NLP58	2-1808-Q3-L58	AX3D0011
2NLP59	2-1808-Q3-L59	AX3D0011
2NLP60	2-1808-Q3-L60	AX3D0011
2NLP61	2-1808-Q3-L61	AX3D0011
2NLP62	2-1808-Q3-L62	AX3D0011
2NLP63	2-1808-Q3-L63	AX3D0011
2NLP64	2-1808-Q3-L64	AX3D0012
2NLP65	2-1808-Q3-L65	AX3D0012
2NLP66	2-1808-Q3-L66	AX3D0012
2NLP67	2-1808-Q3-L67	AX3D0012
2NLP68	2-1808-Q3-L68	AX3D0012
2NLP69	2-1808-Q3-L69	AX3D0012
2NLP70	2-1808-Q3-L70	AX3D0012
2NLP05	2-1808-Q3-L05	AX3D0013
2NLP06	2-1808-Q3-L06	AX3D0013
2NLP07	2-1808-Q3-L07	AX3D0013
2NLP08	2-1808-Q3-L08	AX3D0013
2NLP09	2-1808-Q3-L09	AX3D0013
2NLP10	2-1808-Q3-L10	AX3D0014
2NLP11	2-1808-Q3-L11	AX3D0014
2NLP12	2-1808-Q3-L12	AX3D0014
2NLP13	2-1808-Q3-L13	AX3D0014
2NLP14	2-1808-Q3-L14	AX3D0014
2NLP15	2-1808-Q3-L15	AX3D0014
2NLP16	2-1808-Q3-L16	AX3D0014
2NLP17	2-1808-Q3-L17	AX3D0014
2NLP18	2-1808-Q3-L18	AX3D0014
2NLP19	2-1808-Q3-L19	AX3D0015
2NLP20	2-1808-Q3-L20	AX3D0015
2NLP21	2-1808-Q3-L21	AX3D0015
2NLP22	2-1808-Q3-L22	AX3D0015
2NLP23	2-1808-Q3-L23	AX3D0015
2NLP24	2-1808-Q3-L24	AX3D0015
2NLP25	2-1808-Q3-L25	AX3D0015
2NLP26	2-1808-Q3-L26	AX3D0015
2NLP03	2-1808-Q3-L03	AX3D0013
2NLP04	2-1808-Q3-L04	AX3D0013
2NLP44	2-1808-Q3-L44	AX3D0017
2NLP45	2-1808-Q3-L45	AX3D0017
2NLP27	2-1808-Q3-L27	AX3D0015
2NLP28	2-1808-Q3-L28	AX3D0016
2NLP29	2-1808-Q3-L29	AX3D0016
2NLP30	2-1808-Q3-L30	AX3D0016

EQUIPMENT NUMBER		
LTG PANEL EQPT LOC NO	LTG PANEL PLANT TAG NO	PNL SCHED DWG NO
2NLP31	2-1808-Q3-L31	AX3D0016
2NLP32	2-1808-Q3-L32	AX3D0016
2NLP43	2-1808-Q3-L43	AX3D0017
2NLP01	2-1808-Q3-L01	AX3D0013
2NLP02	2-1808-Q3-L02	AX3D0013
2NLP33	2-1808-Q3-L33	AX3D0016
2NLP34	2-1808-Q3-L34	AX3D0016
2NLP35	2-1808-Q3-L35	AX3D0016
2NLP36	2-1808-Q3-L36	AX3D0016
2NLP48	2-1808-Q3-L48	AX3D0018
2NLP49	2-1808-Q3-L49	AX3D0018
2NLP37	2-1808-Q3-L37	AX3D0017
2NLP38	2-1808-Q3-L38	AX3D0017
2NLP39	2-1808-Q3-L39	AX3D0017
2NLP40	2-1808-Q3-L40	AX3D0017
2NLP47	2-1808-Q3-L47	AX3D0018
2NLP50	2-1808-Q3-L50	AX3D0018
2NLP46	2-1808-Q3-L46	AX3D0018
2NLP51	2-1808-Q3-L51	AX3D0018
2NLP52	2-1808-Q3-L52	AX3D0018
2NLP53	2-1808-Q3-L53	AX3D0018
2NLP54	2-1808-Q3-L54	AX3D0018
2NLP109	2-1808-Q3-L109	AX3D0022
2NLP110	2-1808-Q3-L110	AX3D0022
2NLP111	2-1808-Q3-L111	AX3D0022
2NLP112	2-1808-Q3-L112	AX3D0022
2NLP113	2-1808-Q3-L113	AX3D0022
2NLP114	2-1808-Q3-L114	AX3D0022
2NLP115	2-1808-Q3-L115	AX3D0022
2NLP120	2-1808-Q3-L120	AX3D0025
2NLP121	2-1808-Q3-L121	AX3D0025
2NLP122	2-1808-Q3-L122	AX3D0025
2NLP125	2-1808-Q3-L125	AX3D0026
2NLP126	2-1808-Q3-L126	AX3D0025
2NLP127	2-1808-Q3-L127	AX3D0025
2NLP128	2-1808-Q3-L128	AX3D0025
2NLP129	2-1808-Q3-L129	AX3D0025
2NLP130	2-1808-Q3-L130	AX3D0025
2NLP131	2-1808-Q3-L131	AX3D0026
2NLP132	2-1808-Q3-L132	AX3D0026
2NLP133	2-1808-Q3-L133	AX3D0026
2NLP135	2-1808-Q3-L135	AX3D0026
2NLP136	2-1808-Q3-L136	AX3D0026
2NLP137	2-1808-Q3-L137	AX3D0026
2NLP138	2-1808-Q3-L138	AX3D0026

NOTES:

1. SCHEME CABLE NUMBER SHALL BE DERIVED FROM LIGHTING PANEL NUMBER, EXCEPT AS INDICATED.
2. SCHEME CABLE NUMBER FOR MCC OR SWGR. FEEDER SHALL BE WRITTEN FROM ONE LINE DIAGRAM.
3. 81E WITH * ONLY REQUIRES 2-1/C #2
4. EMERGENCY LIGHTING PANELS 2NLP29, 2NLP32, 2NLP47 & 2NLP50 ARE SEISMIC CATEGORY I AND PROCURED UNDER SPECIFICATION X3AF01.
5. FIELD TO REMOVE VENDOR SUPPLIED FIELD CABLE LUGS. DRILL AND TAP FOR 3/8" BOLTS AT CABLE TERMINATIONS. LUG FIELD CABLES WITH AMPOWER LUGS P/N 325403. LAND AND TERMINATE FIELD CABLES. USE WCSF-500-3N HEAT SHRINK ON LUGS AND CABLES.
6. DISCONNECTS MAY BE ENERGIZED ONLY DURING MODE 5 & 6 OPERATION (SEE PROCEDURE 12001C).
7. PANEL 2NLPSEB2 IS VENDOR SUPPLIED AND LOCATED IN SEB2.

16.0

THIS DOCUMENT SUPERSEDES MULTI-SHEET DRAWING 2X3D0030
WORK THIS DRAWING WITH: 2X3D0030-2

NUCLEAR SAFETY RELATED Q

SOUTHERN COMPANY SERVICES, INC.
BIRMINGHAM, ALABAMA

GEORGIA POWER COMPANY
ALVIN W. VOGTLE NUCLEAR PLANT

LIGHTING PANEL RISER DIAGRAM
UNIT 2

THIS DOCUMENT CONTAINS PROPRIETARY, CONFIDENTIAL, AND/OR TRADE SECRET INFORMATION OF THE SUBSIDIARIES OF THE SOUTHERN COMPANY OR OF THIRD PARTIES. IT IS INTENDED FOR USE ONLY BY EMPLOYEES OF, OR AUTHORIZED CONTRACTORS OF, THE SUBSIDIARIES OF THE SOUTHERN COMPANY. UNAUTHORIZED POSSESSION, USE, DISTRIBUTION, COPYING, DISSEMINATION, OR DISCLOSURE OF ANY PORTION HEREOF IS PROHIBITED.

NO.	VERSIONS	DATE	DR	CHK	APPV
16.0	REV. PER ABN CO39002001E029, VER. 4.0	12/9/04	JLO	TSL	DEW

SCALE: NONE

DRAWING NO.	VER.
2X3D0030-1	16.0

JOB NO.10604

SIZE E 34X44

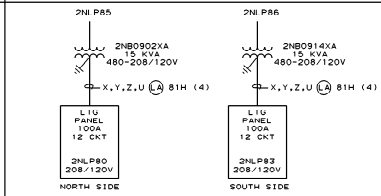

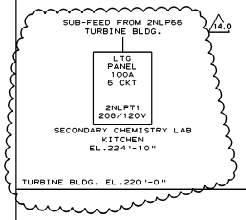

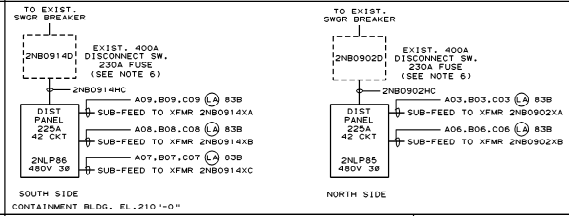

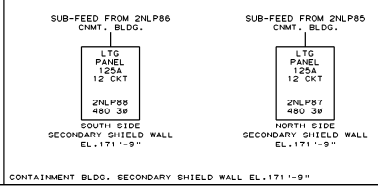

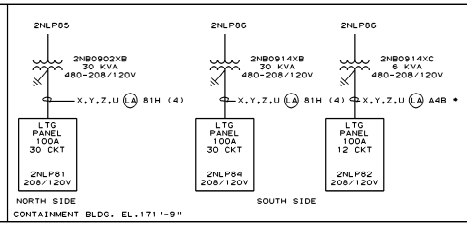

14.0

EQUIPMENT NUMBER		
LTG PANEL EQPT LOC NO.	LTG PANEL PLANT TAG NO.	PNL SCHED DWG NO
2NLP71	2-1808-03-L71	AX3DG012

THIS DOCUMENT CONTAINS PROPRIETARY, CONFIDENTIAL, AND/OR TRADE SECRET INFORMATION OF THE SUBSIDIARIES OF THE SOUTHERN COMPANY OR OF THIRD PARTIES. IT IS INTENDED FOR USE ONLY BY EMPLOYEES OF, OR AUTHORIZED CONTRACTORS OF, THE SUBSIDIARIES OF THE SOUTHERN COMPANY. UNAUTHORIZED POSSESSION, USE, DISTRIBUTION, COPYING, DISSEMINATION, OR DISCLOSURE OF ANY PORTION HEREOF IS PROHIBITED.

NO.	VERSION	DATE	DR	CHK	APPV	DTL
14.0	REVISED PER ABN-38844	09/03/04	TSL	MDN	DEW	

SOUTHERN COMPANY SERVICES, INC.
BIRMINGHAM, ALABAMA

GEORGIA POWER COMPANY
ALVIN W. VOGTLE NUCLEAR PLANT

LIGHTING PANEL RISER DIAGRAM
UNIT 2

SCALE: NONE	DRAWING NO.	VER.
JOB NO.10604	2X3DG030-2	14.0

SIZE E 34X44

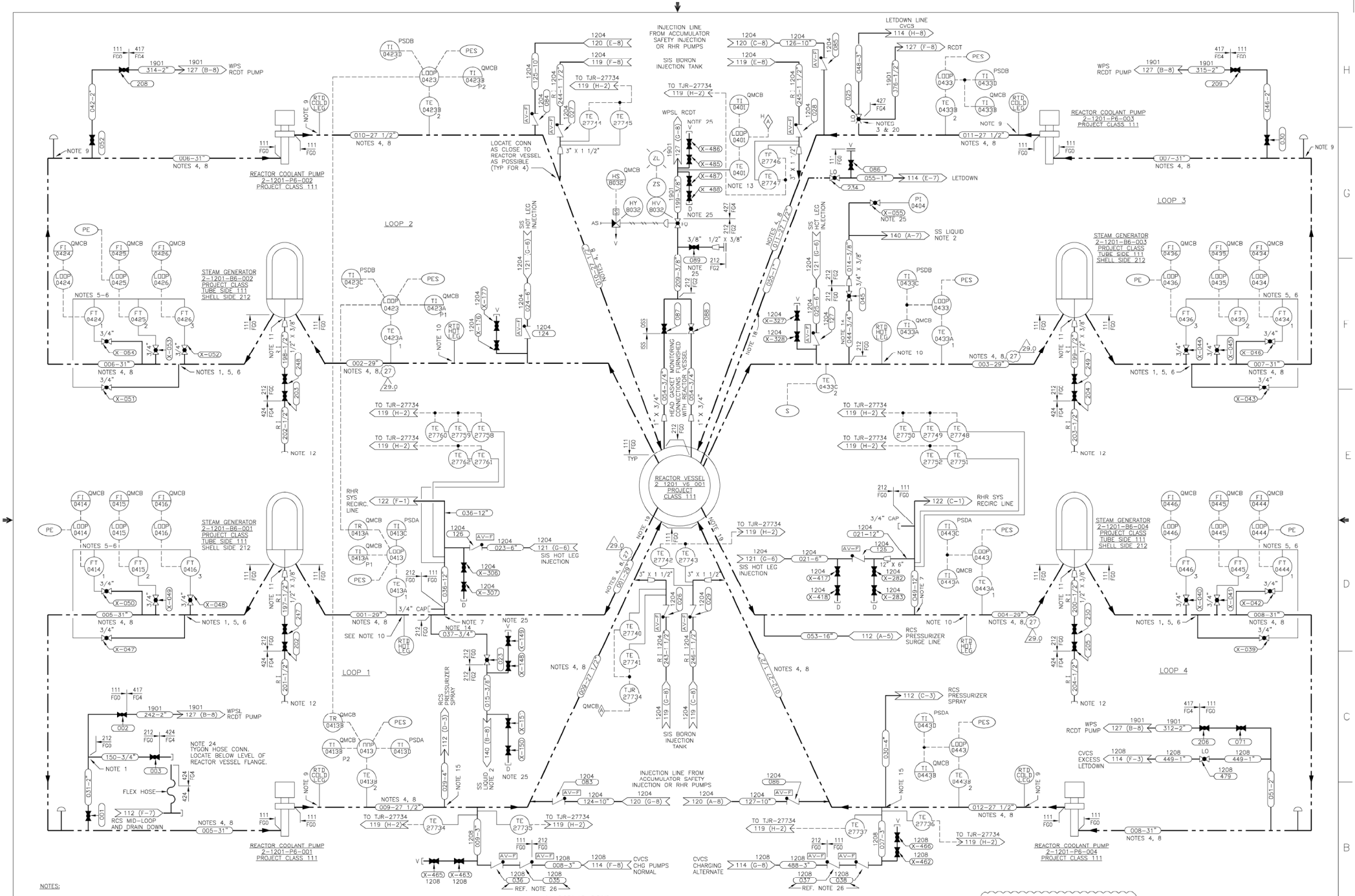

NOTES:

1. PROVIDE 0.375 ID FLOW RESTRICTION AS SHOWN ON BPC DWG CX4DG001.
2. GROSS FAILED FUEL DETECTOR SYSTEM INSTALLED ON THIS LINE OUTSIDE REACTOR CONTAINMENT. (SEE BPC DWG 2X4DB140)
3. PROVIDE 12" REMOVAL SPOOL.
4. INSIDE DIAMETER.
5. LOCATE FLOWMETER IN 90° ELBOW DOWNSTREAM OF STEAM GENERATORS.
6. ELBOW FLOWMETERS.
7. LOCATE CONNECTION IN BOTTOM HALF OF REACTOR COOLANT PIPING ON 45° ANGLE TO VERTICAL.
8. REACTOR COOLANT LOOP PIPING AND ALL EQUIPMENT FURNISHED BY WESTINGHOUSE. ALL OTHER PIPING AND MANUAL VALVES 2" AND SMALLER FURNISHED BY BECHTEL.
9. FOR CONNECTION DETAILS OF RTD COLD LEG, SEE DETAIL "A" ON BPC DWG 2X4DB113.
10. FOR CONNECTION DETAILS OF RTD HOT LEG, SEE DETAIL "A" ON BPC DGW 2X4DB113.
11. 3/8 INCH ID FLOW RESTRICTOR SUPPLIED WITH STEAM GENERATOR FOR CLASS 1 TO CLASS 2 TRANSITION.
    FOR CLASS 1–CLASS 2 TRANSITION, PROVIDE A 3/8 INCH PIPE TO TUBING TRANSITION PIECE.
12. TYGON HOSE TO BE INSTALLED AT THIS CONNECTION FOR DRAINING BOTTOM OF CHANNEL HEAD TO CONTAINMENT SUMP AFTER REACTOR COOLANT SYSTEM HAS BEEN DRAINED BELOW STEAM GENERATOR NOZZLE.
13. SURFACE MOUNTED TEMPERATURE DETECTOR. LOCATE AT BOTTOM OF PIPE.
14. 0.234 I.D. PIPING.
15. SPRAY LINE SCOOP.
16. FOR REACTOR COOLANT PUMP LUBE OIL SPILL PROTECTION ARRANGEMENT SEE DRAWING 2X4DB112.
17. PORTION OF THE SYSTEM IS SUSPECTED TO CAUSE STRESS CORROSION CRACKING. REFER TO THE APPLICABLE DESIGN DRAWING AND PIPING MATERIAL CLASSIFICATIONS FOR MATERIAL AND HEAT TREATMENT REQUIREMENTS.
18. VENT PIPE FURNISHED WITH REACTOR VESSEL HEAD; REMAINDER OF PIPING AND VALVES TO THE FIRST SPOOL PIECE & FLANGE ALSO PROVIDED BY WESTINGHOUSE, EXCEPT VALVES 234 AND 086.
19. FOR REACTOR VESSEL WATER LEVEL INSTRUMENTATION (RVLIS) SEE P&ID 2X4DB113.
20. FOR TYPICAL DETAIL, SEE STD. DWG. AX4DD000.
21. ALL LINES CLASSIFIED R Ⅴ UNLESS OTHERWISE NOTED.
22. DELETED.
23. DELETED.
24. REMOVE TYGON HOSE CONN., CONNECTED/OPERATIONAL ONLY DURING RCS MIDLOOP AND DRAIN DOWN LEVEL OPERATION.
25. THESE ARE KEROTEST VALVES AND MAY NOT ALLOW REVERSE FLOW.
26. THESE VALVES HAVE A SEAL WELDED BONNET PER NRC COMMITMENT SNC473861.
27. MSIP HAS BEEN APPLIED TO LINE 001, 002, 003, AND 004 NEAR THE REACTOR VESSEL NOZZLE. 29.0

CAD 2X4DB111
ACAD2004 LEH – 05

THIS DOCUMENT CONTAINS PROPRIETARY, CONFIDENTIAL, AND/OR TRADE SECRET INFORMATION OF THE SUBSIDIARIES OF THE SOUTHERN COMPANY OR OF THIRD PARTIES. IT IS INTENDED FOR USE ONLY BY EMPLOYEES OF, OR AUTHORIZED CONTRACTORS OF, THE SUBSIDIARIES OF THE SOUTHERN COMPANY. UNAUTHORIZED POSSESSION, USE, DISTRIBUTION, COPYING, DISSEMINATION, OR DISCLOSURE OF ANY PORTION HEREOF IS PROHIBITED.

NO.	VERSIONS	DATE	DR	CHK	APPV	DTL
29.0	REVISED PER ABN SNC526823M002, VER. 1.0	10/20/14	LEH	ALM	MDW	

SOUTHERN COMPANY

GEORGIA POWER COMPANY
ALVIN W. VOGTLE NUCLEAR PLANT

P & I DIAGRAM
REACTOR COOLANT SYSTEM
SYSTEM NO. 1201

SCALE: NONE
JOB NO.10604
DRAWING NO. 2X4DB111
VER. 29.0
SIZE E 34X44
DRAWING CATEGORY: CRITICAL

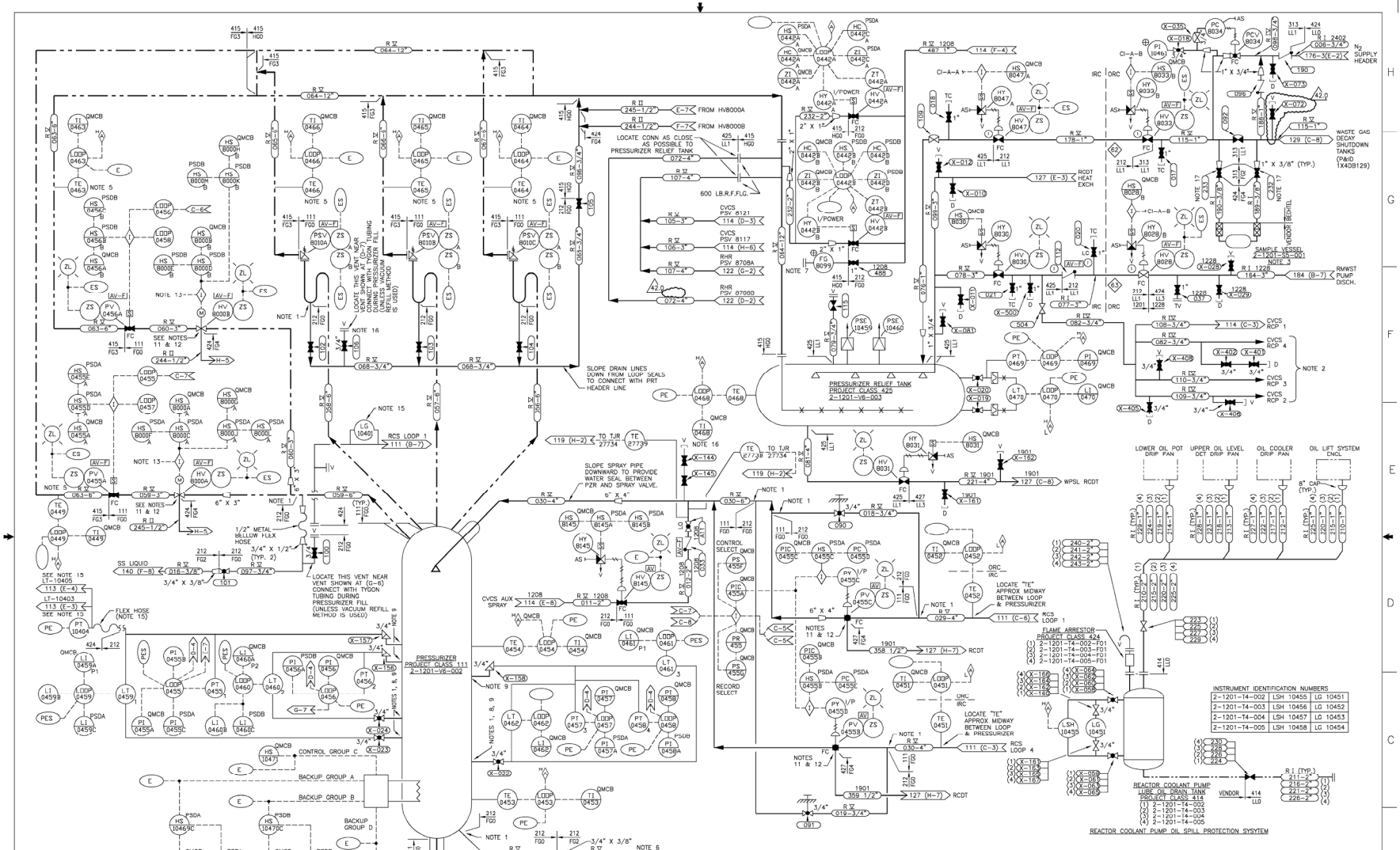

NOTES: (CONT'D)

9. LINE BETWEEN PRESSURIZER AND VALVE, INCLUDING THE VALVE IS PROJECT CLASS 212.
10. DELETED.
11. PROVIDE 12" REMOVAL SPOOL.
12. SEE AX4DD000 FOR TYPICAL VALVE STEM LEAK-OFF DETAIL.
13. REFER TO ELEMENTARY DWGS. 2X3D-BD-B02A AND 2X3D-BD-B02B FOR DETAILS.
14. DELETED.
15. CONNECTED/OPERATIONAL ONLY DURING RCS MID-LOOP AND DRAIN DOWN LEVEL OPERATION.
16. VACUUM CONNECTION FOR REACTOR COOLANT VACUUM REFILL SYSTEM.
17. THESE ARE KEROTEST VALVES AND MAY NOT ALLOW REVERSE FLOW.

NOTES: (CONT'D)

3. ALL EQUIPMENT AND VALVES TO BE FURNISHED BY WESTINGHOUSE EXCEPT THE FOLLOWING:
   A. ALL PIPING AND MANUAL VALVES 2" AND UNDER, (SURGE LINE, PRESSURIZER RELIEF, AND LOOP SEAL PIPING FURNISHED BY WESTINGHOUSE).
   B. SAMPLE VESSEL AND ATTACHED PIPING FITTINGS.
   C. REACTOR COOLANT PUMP OIL DRAIN TANK TOGETHER WITH ASSOCIATED PIPING, VALVES, AND INSTRUMENTATION.
4. FOR DRAIN HEADER INFORMATION SEE DWG. 2X4DB144-2.
5. PLACE DETECTORS AT BOTTOM OF PIPE, SURFACE MOUNTED.
6. DIGITAL PRESSURE INDICATOR TO BE CONNECTED TO THIS LINE DOWNSTREAM OF THE SAMPLE HX.
7. TYGON HOSE TO BE CONNECTED DURING START-UP VENTING. FG-8099 HAS A PROJECT CLASS OF 424 INSTALLED IN A PROJECT CLASS PIPE OF 415.
8. ROOT VALVES PROCURED AS CLASS 111 AND INSTALLED PER CLASS 212.

NOTES:

1. PROVIDE 0.375" ID RESTRICTION AS SHOWN ON BPC DWG NO. CX4DG001.
2. FOR TYPICAL MAKE-UP PIPING ARRANGEMENT TO RCP STAND-PIPE SEE DWG 2X4DB114 (D-6).

REFER TO WESTINGHOUSE FLOW DIAGRAM DWG NO. 1D9AF69.

THIS DOCUMENT CONTAINS PROPRIETARY, CONFIDENTIAL, AND/OR TRADE SECRET INFORMATION OF THE SUBSIDIARIES OF THE SOUTHERN COMPANY OR OF THIRD PARTIES. IT IS INTENDED FOR USE ONLY BY EMPLOYEES OF, OR AUTHORIZED CONTRACTORS OF, THE SUBSIDIARIES OF THE SOUTHERN COMPANY. UNAUTHORIZED POSSESSION, USE, DISTRIBUTION, COPYING, DISSEMINATION, OR DISCLOSURE OF ANY PORTION HEREOF IS PROHIBITED.

NO.		DATE	DR	CHK	APPV	DTL
42.0	REVISED PER ABN-V02129, VER. 1.0	05/13/10	DRW	RKF	PML	X

CAD 2X4DB112
Acad2000 DRW- 05

SOUTHERN COMPANY

GEORGIA POWER COMPANY
ALVIN W. VOGTLE NUCLEAR PLANT

P & I DIAGRAM
REACTOR COOLANT SYSTEM
SYSTEM NO. 1201

SCALE: NONE
DRAWING NO. 2X4DB112
VER. 42.0
JOB NO.10604
SIZE E 34X44
DRAWING CATEGORY: CRITICAL

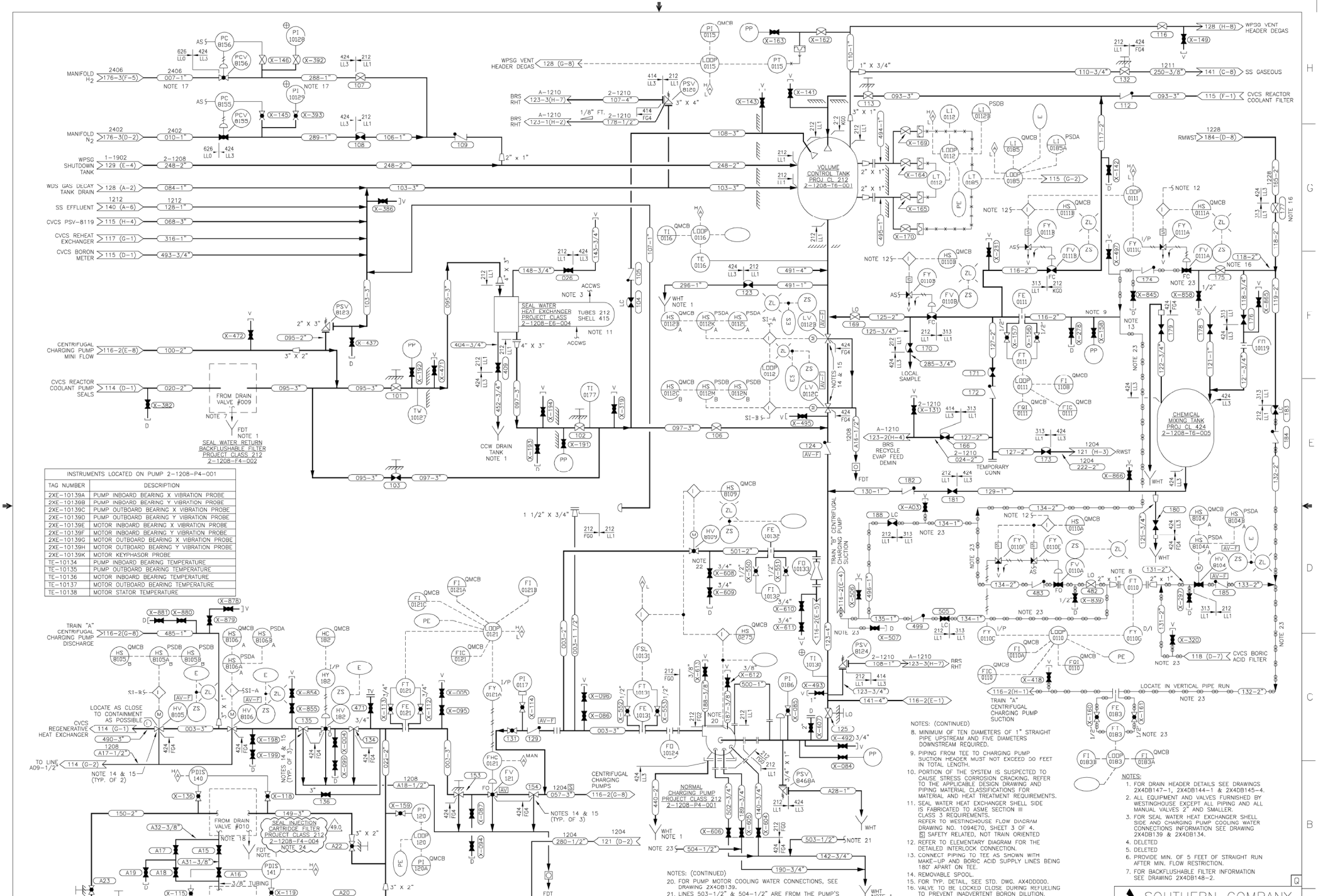

INSTRUMENTS LOCATED ON PUMP 2-1208-P4-001	
TAG NUMBER	DESCRIPTION
2XE-10139A	PUMP INBOARD BEARING X VIBRATION PROBE
2XE-10139B	PUMP INBOARD BEARING Y VIBRATION PROBE
2XE-10139C	PUMP OUTBOARD BEARING X VIBRATION PROBE
2XE-10139D	PUMP OUTBOARD BEARING Y VIBRATION PROBE
2XE-10139E	MOTOR INBOARD BEARING X VIBRATION PROBE
2XE-10139F	MOTOR INBOARD BEARING Y VIBRATION PROBE
2XE-10139G	MOTOR OUTBOARD BEARING X VIBRATION PROBE
2XE-10139H	MOTOR OUTBOARD BEARING Y VIBRATION PROBE
2XE-10139K	MOTOR KEYPHASOR PROBE
TE-10134	PUMP INBOARD BEARING TEMPERATURE
TE-10135	PUMP OUTBOARD BEARING TEMPERATURE
TE-10136	MOTOR INBOARD BEARING TEMPERATURE
TE-10137	MOTOR OUTBOARD BEARING TEMPERATURE
TE-10138	MOTOR STATOR TEMPERATURE

NOTES: (CONTINUED)

8. MINIMUM OF TEN DIAMETERS OF 1" STRAIGHT PIPE UPSTREAM AND FIVE DIAMETERS DOWNSTREAM REQUIRED.
9. PIPING FROM TEE TO CHARGING PUMP SUCTION HEADER MUST NOT EXCEED 50 FEET IN TOTAL LENGTH.
10. PORTION OF THE SYSTEM IS SUSPECTED TO CAUSE STRESS CORROSION CRACKING. REFER TO THE APPLICABLE DESIGN DRAWING AND PIPING MATERIAL CLASSIFICATIONS FOR MATERIAL AND HEAT TREATMENT REQUIREMENTS.
11. SEAL WATER HEAT EXCHANGER SHELL SIDE IS FABRICATED TO ASME SECTION III CLASS 3 REQUIREMENTS. REFER TO WESTINGHOUSE FLOW DIAGRAM DRAWING NO. 1094E70, SHEET 3 OF 4. [S] SAFETY RELATED, NOT TRAIN ORIENTED
12. REFER TO ELEMENTARY DIAGRAM FOR THE DETAILED INTERLOCK CONNECTION.
13. CONNECT PIPING TO TEE AS SHOWN WITH MAKE-UP AND BORIC ACID SUPPLY LINES BEING 180° APART ON TEE.
14. REMOVABLE SPOOL.
15. FOR TYP. DETAIL, SEE STD. DWG. AX4DD000.
16. VALVE TO BE LOCKED CLOSE DURING REFUELING TO PREVENT INADVERTENT BORON DILUTION.
17. HYDROGEN PIPING IN SAFETY-RELATED BUILDINGS ARE TO BE DESIGNED TO ENSURE THAT THE PIPING WILL NOT BREAK UNDER EARTHQUAKE LOADINGS.
18. FOR FILTER INFORMATION SEE DWG. 2X4DB148-3.
19. FOR FILTER INFORMATION SEE DWG. 2X4DB148-4.

NOTES: (CONTINUED)

20. FOR PUMP MOTOR COOLING WATER CONNECTIONS, SEE DRAWING 2X4DB139.
21. LINES 503-1/2" & 504-1/2" ARE FROM THE PUMP'S MECHANICAL SEAL DRAIN CONNECTIONS.
22. VALVE 2HV-8109 MAY BE CLOSED AT TOTAL NCP FLOW RATES GREATER THAN 120 GPM.
23. HEAT TRACE CABLE HAS BEEN RETIRED IN PLACE. ONLY TEMPERATURE ANNUNCIATION IS AVAILABLE. HEAT TRACE CABLE CAN BE REMOVED.
24. FOR OVERPRESSURE PROTECTION, THE SEAL INJECTION CARTRIDGE FILTER VESSELS SHALL NOT BE ISOLATED SUCH THAT A VOLUME OF WATER WOULD BECOME TRAPPED. 49.0

NOTES:

1. FOR DRAIN HEADER DETAILS SEE DRAWINGS 2X4DB147-1, 2X4DB144-1 & 2X4DB145-4.
2. ALL EQUIPMENT AND VALVES FURNISHED BY WESTINGHOUSE, EXCEPT ALL PIPING AND ALL MANUAL VALVES 2" AND SMALLER.
3. FOR SEAL WATER HEAT EXCHANGER SHELL SIDE AND CHARGING PUMP COOLING WATER CONNECTIONS INFORMATION SEE DRAWING 2X4DB139 & 2X4DB134.
4. DELETED
5. DELETED
6. PROVIDE MIN. OF 5 FEET OF STRAIGHT RUN AFTER MIN. FLOW RESTRICTION.
7. FOR BACKFLUSHABLE FILTER INFORMATION SEE DRAWING 2X4DB148-2.

SOUTHERN COMPANY

GEORGIA POWER COMPANY
ALVIN W. VOGTLE NUCLEAR PLANT

P & I DIAGRAM
CHEMICAL & VOLUME CONTROL SYSTEM
SYSTEM NO. 1208

CAD 2X4DB116-1.DWG
ACADZ000 LEH - 05

THIS DOCUMENT CONTAINS PROPRIETARY, CONFIDENTIAL, AND/OR TRADE SECRET INFORMATION OF THE SUBSIDIARIES OF THE SOUTHERN COMPANY OR OF THIRD PARTIES. IT IS INTENDED FOR USE ONLY BY EMPLOYEES OF, OR AUTHORIZED CONTRACTORS OF, THE SUBSIDIARIES OF THE SOUTHERN COMPANY. UNAUTHORIZED POSSESSION, USE, DISTRIBUTION, COPYING, DISSEMINATION, OR DISCLOSURE OF ANY PORTION HEREOF IS PROHIBITED.

NO.	VERSIONS	DATE	DR	CHK	APPV	DTL
49.0	REVISED PER ABN SNC495265M002, VER. 1.0	10/07/14	LEH	MWD	WLN	

SCALE: NONE
JOB NO.10604
DRAWING NO. 2X4DB116-1
VER. 49.0
SIZE E 34X44
DRAWING CATEGORY: CRITICAL

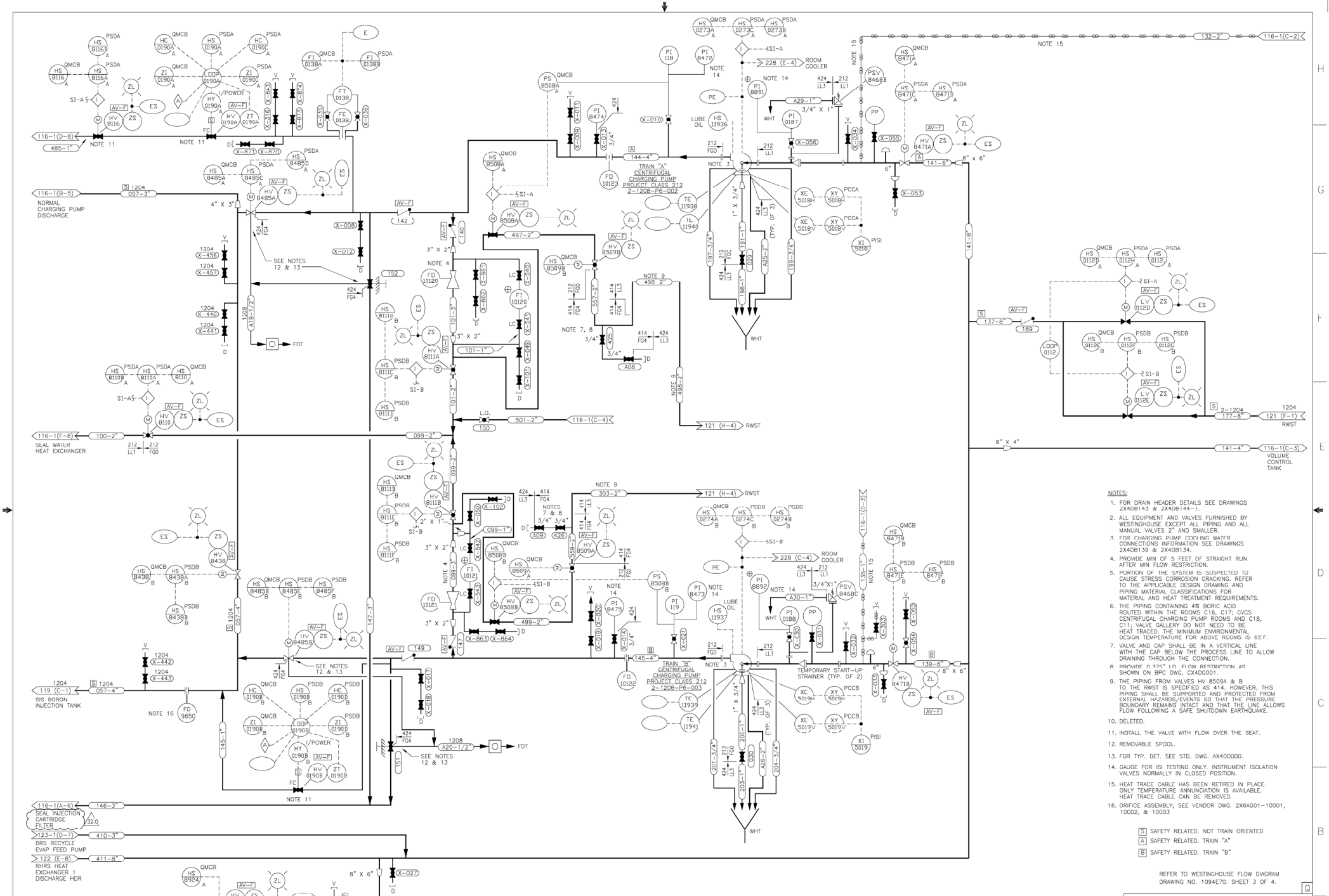

NOTES:

1. FOR DRAIN HEADER DETAILS SEE DRAWINGS 2X4DB143 & 2X4DB144-1.
2. ALL EQUIPMENT AND VALVES FURNISHED BY WESTINGHOUSE EXCEPT ALL PIPING AND ALL MANUAL VALVES 2" AND SMALLER.
3. FOR CHARGING PUMP COOLING WATER CONNECTIONS INFORMATION SEE DRAWINGS 2X4DB139 & 2X4DB134.
4. PROVIDE MIN OF 5 FEET OF STRAIGHT RUN AFTER MIN FLOW RESTRICTION.
5. PORTION OF THE SYSTEM IS SUSPECTED TO CAUSE STRESS CORROSION CRACKING. REFER TO THE APPLICABLE DESIGN DRAWING AND PIPING MATERIAL CLASSIFICATIONS FOR MATERIAL AND HEAT TREATMENT REQUIREMENTS.
6. THE PIPING CONTAINING 4% BORIC ACID ROUTED WITHIN THE ROOMS C16, C17; CVCS CENTRIFUGAL CHARGING PUMP ROOMS AND C18, C11; VALVE GALLERY DO NOT NEED TO BE HEAT TRACED. THE MINIMUM ENVIRONMENTAL DESIGN TEMPERATURE FOR ABOVE ROOMS IS 65°F.
7. VALVE AND CAP SHALL BE IN A VERTICAL LINE WITH THE CAP BELOW THE PROCESS LINE TO ALLOW DRAINING THROUGH THE CONNECTION.
8. PROVIDE 0.375" ID FLOW RESTRICTION AS SHOWN ON BPC DWG. CX4DG001.
9. THE PIPING FROM VALVES HV 8509A & B TO THE RWST IS SPECIFIED AS 414. HOWEVER, THIS PIPING SHALL BE SUPPORTED AND PROTECTED FROM EXTERNAL HAZARDS/EVENTS SO THAT THE PRESSURE BOUNDARY REMAINS INTACT AND THAT THE LINE ALLOWS FLOW FOLLOWING A SAFE SHUTDOWN EARTHQUAKE.
10. DELETED.
11. INSTALL THE VALVE WITH FLOW OVER THE SEAT.
12. REMOVABLE SPOOL.
13. FOR TYP. DET. SEE STD. DWG. AX4DD000.
14. GAUGE FOR ISI TESTING ONLY. INSTRUMENT ISOLATION VALVES NORMALLY IN CLOSED POSITION.
15. HEAT TRACE CABLE HAS BEEN RETIRED IN PLACE. ONLY TEMPERATURE ANNUNCIATION IS AVAILABLE. HEAT TRACE CABLE CAN BE REMOVED.
16. ORIFICE ASSEMBLY; SEE VENDOR DWG. 2X6AG01-10001, 10002, & 10003

S SAFETY RELATED. NOT TRAIN ORIENTED
A SAFETY RELATED. TRAIN "A"
B SAFETY RELATED. TRAIN "B"

REFER TO WESTINGHOUSE FLOW DIAGRAM DRAWING NO. 1094E70. SHEET 3 OF 4.

SOUTHERN COMPANY

GEORGIA POWER COMPANY
ALVIN W. VOGTLE NUCLEAR PLANT

P & I DIAGRAM
CHEMICAL & VOLUME CONTROL SYSTEM
SYSTEM NO. 1208

CAD 2X4DB116-2.DWG
ACADZK LEH - 07

THIS DOCUMENT CONTAINS PROPRIETARY, CONFIDENTIAL, AND/OR TRADE SECRET INFORMATION OF THE SUBSIDIARIES OF THE SOUTHERN COMPANY OR OF THIRD PARTIES. IT IS INTENDED FOR USE ONLY BY EMPLOYEES OF, OR AUTHORIZED CONTRACTORS OF, THE SUBSIDIARIES OF THE SOUTHERN COMPANY. UNAUTHORIZED POSSESSION, USE, DISTRIBUTION, COPYING, DISSEMINATION, OR DISCLOSURE OF ANY PORTION HEREOF IS PROHIBITED.

NO.	VERSIONS	DATE	DR	CHK	APPV	DTL
32.0	REVISED PER ABN SNC495265M003, VER. 1.0	10/07/14	LEH	MWD	WLN	

SCALE: NONE
JOB NO.10604
DRAWING NO. 2X4DB116-2
VER. 32.0
SIZE E 34X44
DRAWING CATEGORY: CRITICAL

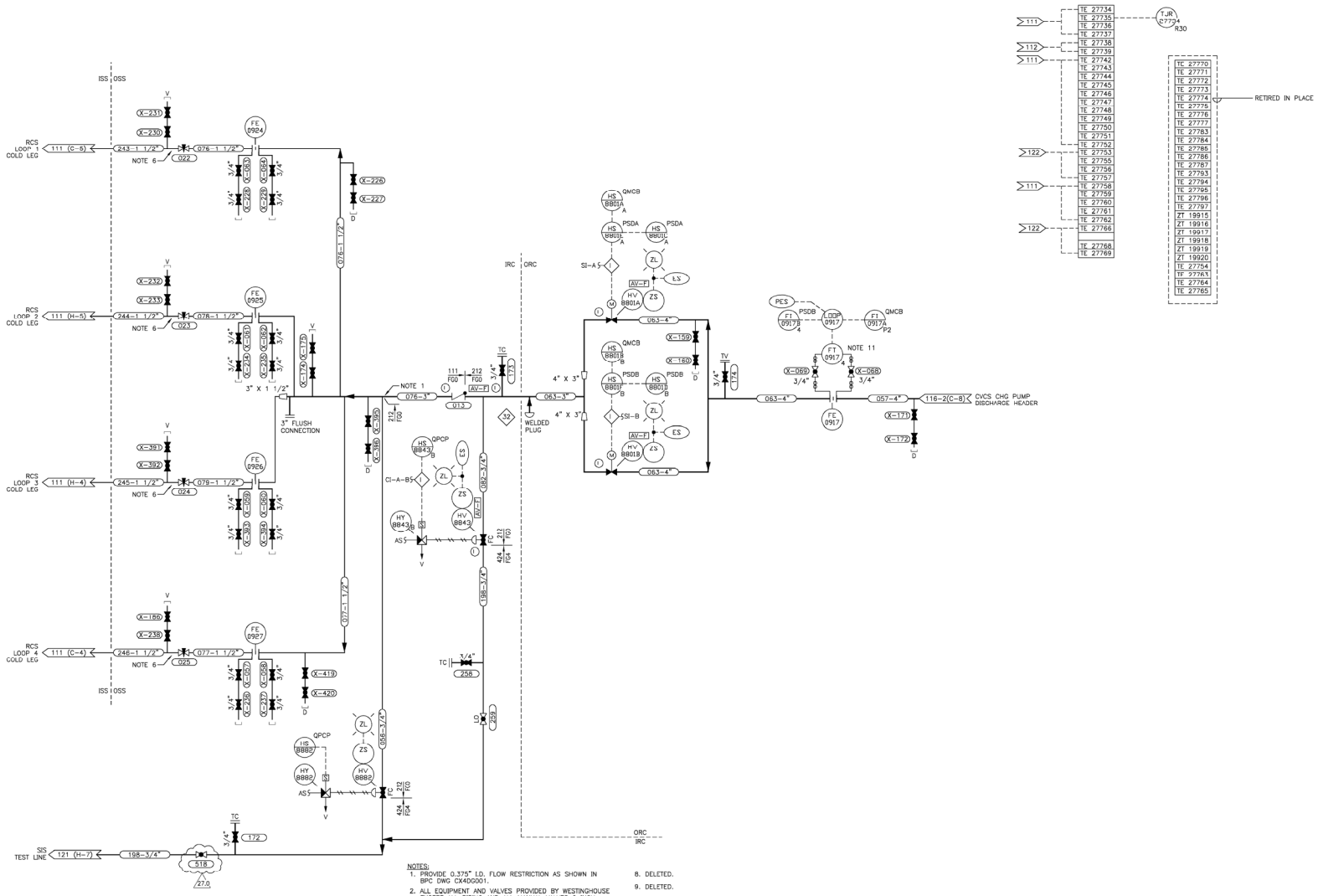

NOTES:

1. PROVIDE 0.375" I.D. FLOW RESTRICTION AS SHOWN IN BPC DWG CX4DG001.
2. ALL EQUIPMENT AND VALVES PROVIDED BY WESTINGHOUSE EXCEPT ALL PIPING AND ALL MANUAL VALVES 2 INCH AND SMALLER, AND EQUIPMENT MARKED ⊕ .
3. DELETED.
4. DELETED.
5. DELETED.
6. ADJUST VALVES IN FIELD TO LIMIT CENTRIFUGAL CHARGING PUMP RUNOUT, THEN LOCK IN POSITION. REFER TO SIS START-UP TEST PROCEDURE GAE/GBE-SU-2.3.3. BECHTEL LOG X6AA13-8.
7. PORTION OF THE SYSTEM IS SUSPECTED TO CAUSE STRESS CORROSION CRACKING. REFER TO THE APPLICABLE DESIGN DRAWING AND PIPING MATERIAL CLASSIFICATIONS FOR MATERIAL AND HEAT TREATMENT REQUIREMENTS.
8. DELETED.
9. DELETED.
10. DELETED.
11. HEAT TRACE CABLE HAS BEEN RETIRED IN PLACE. ONLY TEMPERATURE ANNUNCIATION IS AVAILABLE. HEAT TRACE CABLE CAN BE REMOVED.

REFER TO WESTINGHOUSE FLOW DIAGRAM DRAWING NO. 1094E71, SHEET 1 OF 3. Q

SOUTHERN COMPANY

GEORGIA POWER COMPANY
ALVIN W. VOGTLE NUCLEAR PLANT

P & I DIAGRAM
SAFETY INJECTION SYSTEM
SYSTEM NO. 1204

CAD 2X4DB119.DWG
ACAD2002 Vep - 02

THIS DOCUMENT CONTAINS PROPRIETARY, CONFIDENTIAL, AND/OR TRADE SECRET INFORMATION OF THE SUBSIDIARIES OF THE SOUTHERN COMPANY OR OF THIRD PARTIES. IT IS INTENDED FOR USE ONLY BY EMPLOYEES OF, OR AUTHORIZED CONTRACTORS OF, THE SUBSIDIARIES OF THE SOUTHERN COMPANY. UNAUTHORIZED POSSESSION, USE, DISTRIBUTION, COPYING, DISSEMINATION, OR DISCLOSURE OF ANY PORTION HEREOF IS PROHIBITED.

NO.	VERSIONS	DATE	DR	CHK	APPV	UTL
27.0	REVISED PER ABN 2071073601M002 VER. 2.0	3-31-09	Vep	ELC	JMR	X

SCALE: NONE | DRAWING NO. 2X4DB119 | VER. 27.0

JOB NO.10604

SIZE E 34X44

DRAWING CATEGORY: CRITICAL

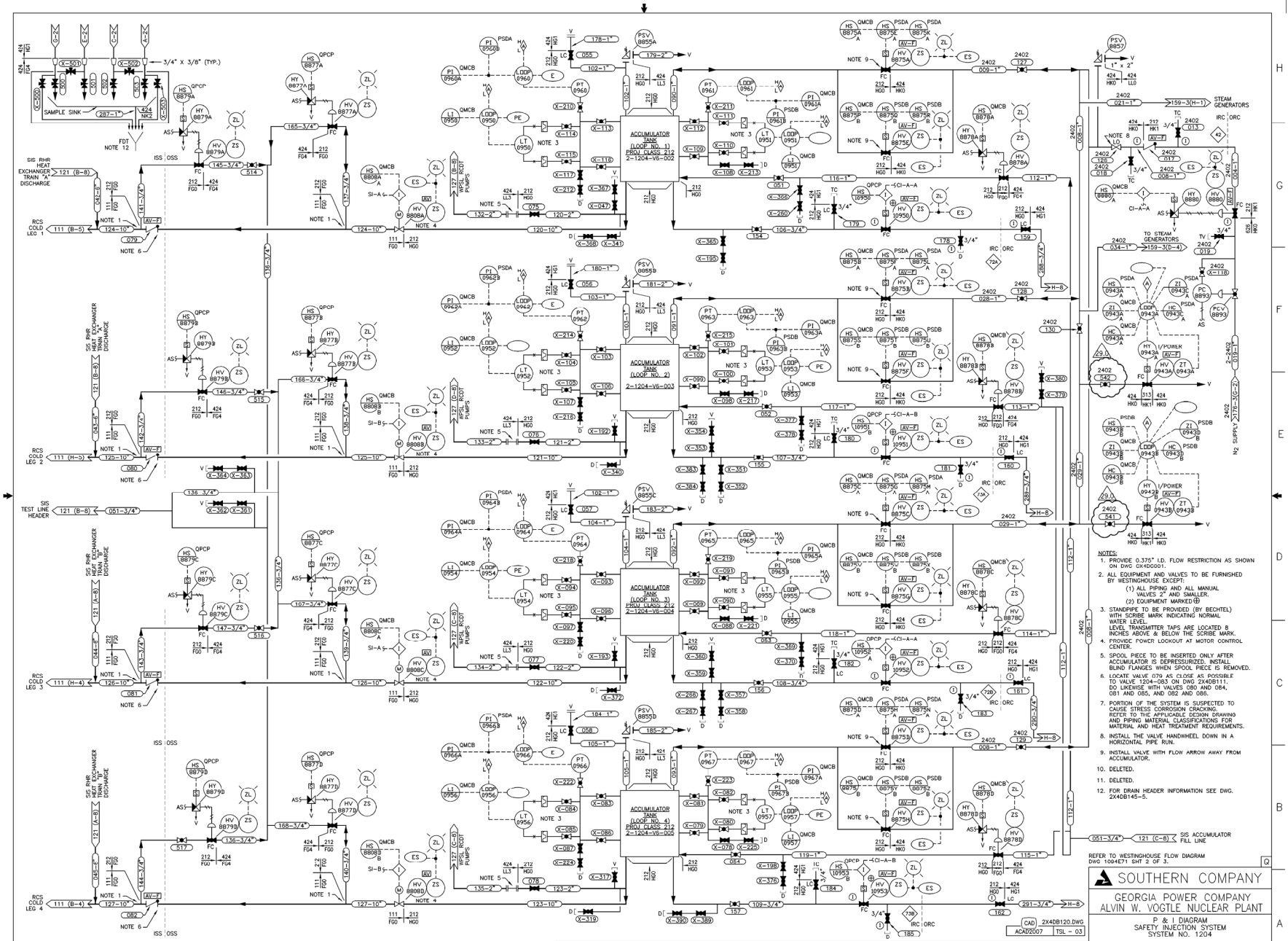

NOTES:

1. PROVIDE 0.375" I.D. FLOW RESTRICTION AS SHOWN ON DWG CX4DC001.
2. ALL EQUIPMENT AND VALVES TO BE FURNISHED BY WESTINGHOUSE EXCEPT:
   (1) ALL PIPING AND ALL MANUAL VALVES 2" AND SMALLER.
   (2) EQUIPMENT MARKED ⊕
3. STANDPIPE TO BE PROVIDED (BY BECHTEL) WITH SCRIBE MARK INDICATING NORMAL WATER LEVEL.
   LEVEL TRANSMITTER TAPS ARE LOCATED 8 INCHES ABOVE & BELOW THE SCRIBE MARK.
4. PROVIDE POWER LOCKOUT AT MOTOR CONTROL CENTER.
5. SPOOL PIECE TO BE INSERTED ONLY AFTER ACCUMULATOR IS DEPRESSURIZED. INSTALL BLIND FLANGES WHEN SPOOL PIECE IS REMOVED.
6. LOCATE VALVE 079 AS CLOSE AS POSSIBLE TO VALVE 1204-083 ON DWG 2X4DB111. DO LIKEWISE WITH VALVES 080 AND 084, 081 AND 085, AND 082 AND 086.
7. PORTION OF THE SYSTEM IS SUSPECTED TO CAUSE STRESS CORROSION CRACKING. REFER TO THE APPLICABLE DESIGN DRAWING AND PIPING MATERIAL CLASSIFICATIONS FOR MATERIAL AND HEAT TREATMENT REQUIREMENTS.
8. INSTALL THE VALVE HANDWHEEL DOWN IN A HORIZONTAL PIPE RUN.
9. INSTALL VALVE WITH FLOW ARROW AWAY FROM ACCUMULATOR.
10. DELETED.
11. DELETED.
12. FOR DRAIN HEADER INFORMATION SEE DWG. 2X4DB145-5.

REFER TO WESTINGHOUSE FLOW DIAGRAM DWG 1094E71 SHT 2 OF 3.

SOUTHERN COMPANY

GEORGIA POWER COMPANY
ALVIN W. VOGTLE NUCLEAR PLANT

P & I DIAGRAM
SAFETY INJECTION SYSTEM
SYSTEM NO. 1204

CAD 2X4DB120.DWG
ACAD2007 TSL - 03

THIS DOCUMENT CONTAINS PROPRIETARY, CONFIDENTIAL, AND/OR TRADE SECRET INFORMATION OF THE SUBSIDIARIES OF THE SOUTHERN COMPANY OR OF THIRD PARTIES. IT IS INTENDED FOR USE ONLY BY EMPLOYEES OF, OR AUTHORIZED CONTRACTORS OF, THE SUBSIDIARIES OF THE SOUTHERN COMPANY. UNAUTHORIZED POSSESSION, USE, DISTRIBUTION, COPYING, DISSEMINATION, OR DISCLOSURE OF ANY PORTION HEREOF IS PROHIBITED.

NO.	VERSIONS	DATE	DR	CHK	APPV	DTL
29.0	REVISED PER ABN 20390013014016, VER. 1.0	04/02/13	TSL	ELC	JMR	X

SIZE E 34X44

SCALE: NONE

DRAWING NO. 2X4DB120

VER. 29.0

JOB NO.10604

DRAWING CATEGORY: CRITICAL

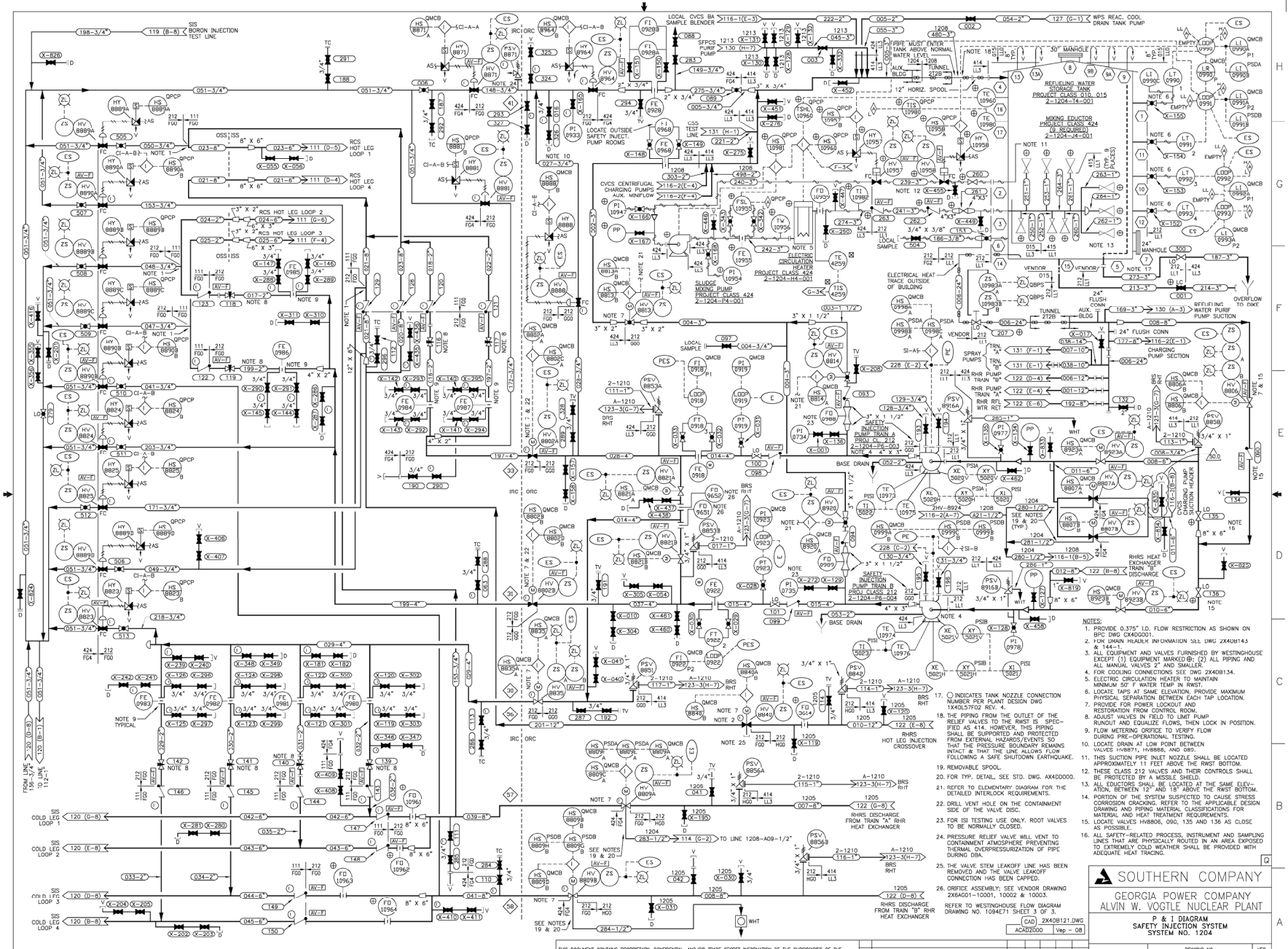

NOTES:

1. PROVIDE 0.375" I.D. FLOW RESTRICTION AS SHOWN ON BPC DWG CX4DQ001.
2. FOR DRAIN HEADER INFORMATION SEE DWG 2X4DB143 & 144-1.
3. ALL EQUIPMENT AND VALVES FURNISHED BY WESTINGHOUSE EXCEPT (1) EQUIPMENT MARKED ⊕; (2) ALL PIPING AND ALL MANUAL VALVES 2" AND SMALLER.
4. FOR COOLING CONNECTIONS SEE DWG 2X4DB134.
5. ELECTRIC CIRCULATION HEATER TO MAINTAIN MINIMUM 50° F WATER TEMP IN RWST.
6. LOCATE TAPS AT SAME ELEVATION. PROVIDE MAXIMUM PHYSICAL SEPARATION BETWEEN EACH TAP LOCATION.
7. PROVIDE FOR POWER LOCKOUT AND RESTORATION FROM CONTROL ROOM.
8. ADJUST VALVES IN FIELD TO LIMIT PUMP RUNOUT AND EQUALIZE FLOWS, THEN LOCK IN POSITION.
9. FLOW METERING ORIFICE TO VERIFY FLOW DURING PRE-OPERATIONAL TESTING.
10. LOCATE DRAIN AT LOW POINT BETWEEN VALVES HV8871, HV8888, AND 080.
11. THIS SUCTION PIPE INLET NOZZLE SHALL BE LOCATED APPROXIMATELY 11 FEET ABOVE THE RWST BOTTOM.
12. THESE CLASS 212 VALVES AND THEIR CONTROLS SHALL BE PROTECTED BY A MISSILE SHIELD.
13. ALL EDUCTORS SHALL BE LOCATED AT THE SAME ELEVATION, BETWEEN 12" AND 18" ABOVE THE RWST BOTTOM.
14. PORTION OF THE SYSTEM SUSPECTED TO CAUSE STRESS CORROSION CRACKING. REFER TO THE APPLICABLE DESIGN DRAWING AND PIPING MATERIAL CLASSIFICATIONS FOR MATERIAL AND HEAT TREATMENT REQUIREMENTS.
15. LOCATE VALVES HV8806, 090, 135 AND 136 AS CLOSE AS POSSIBLE.
16. ALL SAFETY-RELATED PROCESS, INSTRUMENT AND SAMPLING LINES THAT ARE PHYSICALLY ROUTED IN AN AREA EXPOSED TO EXTREMELY COLD WEATHER SHALL BE PROVIDED WITH ADEQUATE HEAT TRACING.
17. ○ INDICATES TANK NOZZLE CONNECTION NUMBER PER PLANT DESIGN DWG 1X4DL57F02 REV. 4.
18. THE PIPING FROM THE OUTLET OF THE RELIEF VALVES TO THE RWST IS SPECIFIED AS 414. HOWEVER, THIS PIPING SHALL BE SUPPORTED AND PROTECTED FROM EXTERNAL HAZARDS/EVENTS SO THAT THE PRESSURE BOUNDARY REMAINS INTACT & THAT THE LINE ALLOWS FLOW FOLLOWING A SAFE SHUTDOWN EARTHQUAKE.
19. REMOVABLE SPOOL.
20. FOR TYP. DETAIL, SEE STD. DWG. AX4DD000.
21. REFER TO ELEMENTARY DIAGRAM FOR THE DETAILED INTERLOCK REQUIREMENTS.
22. DRILL VENT HOLE ON THE CONTAINMENT SIDE OF THE VALVE DISC.
23. FOR ISI TESTING USE ONLY. ROOT VALVES TO BE NORMALLY CLOSED.
24. PRESSURE RELIEF VALVE WILL VENT TO CONTAINMENT ATMOSPHERE PREVENTING THERMAL OVERPRESSURIZATION OF PIPE DURING DBA.
25. THE VALVE STEM LEAKOFF LINE HAS BEEN REMOVED AND THE VALVE LEAKOFF CONNECTION HAS BEEN CAPPED.
26. ORIFICE ASSEMBLY; SEE VENDOR DRAWING 2X6AG01-10001, 10002 & 10003.

REFER TO WESTINGHOUSE FLOW DIAGRAM DRAWING NO. 1094E71 SHEET 3 OF 3.

SOUTHERN COMPANY

GEORGIA POWER COMPANY
ALVIN W. VOGTLE NUCLEAR PLANT

P & I DIAGRAM
SAFETY INJECTION SYSTEM
SYSTEM NO. 1204

CAD 2X4DB121.DWG
ACAD2000 Vep - 08

THIS DOCUMENT CONTAINS PROPRIETARY, CONFIDENTIAL, AND/OR TRADE SECRET INFORMATION OF THE SUBSIDIARIES OF THE SOUTHERN COMPANY OR OF THIRD PARTIES. IT IS INTENDED FOR USE ONLY BY EMPLOYEES OF, OR AUTHORIZED CONTRACTORS OF, THE SUBSIDIARIES OF THE SOUTHERN COMPANY. UNAUTHORIZED POSSESSION, USE, DISTRIBUTION, COPYING, DISSEMINATION, OR DISCLOSURE OF ANY PORTION HEREOF IS PROHIBITED.

NO.	VERSIONS	DATE	DR	CHK	APPV	DTL
50.0	REVISED PER ABN 2100547901M003, VER. 1.0	3-25-10	Vep	GDM	JMR	X

SCALE: NONE

DRAWING NO. 2X4DB121 VER. 50.0

JOB NO.10604

SIZE E 34X44

DRAWING CATEGORY: CRITICAL

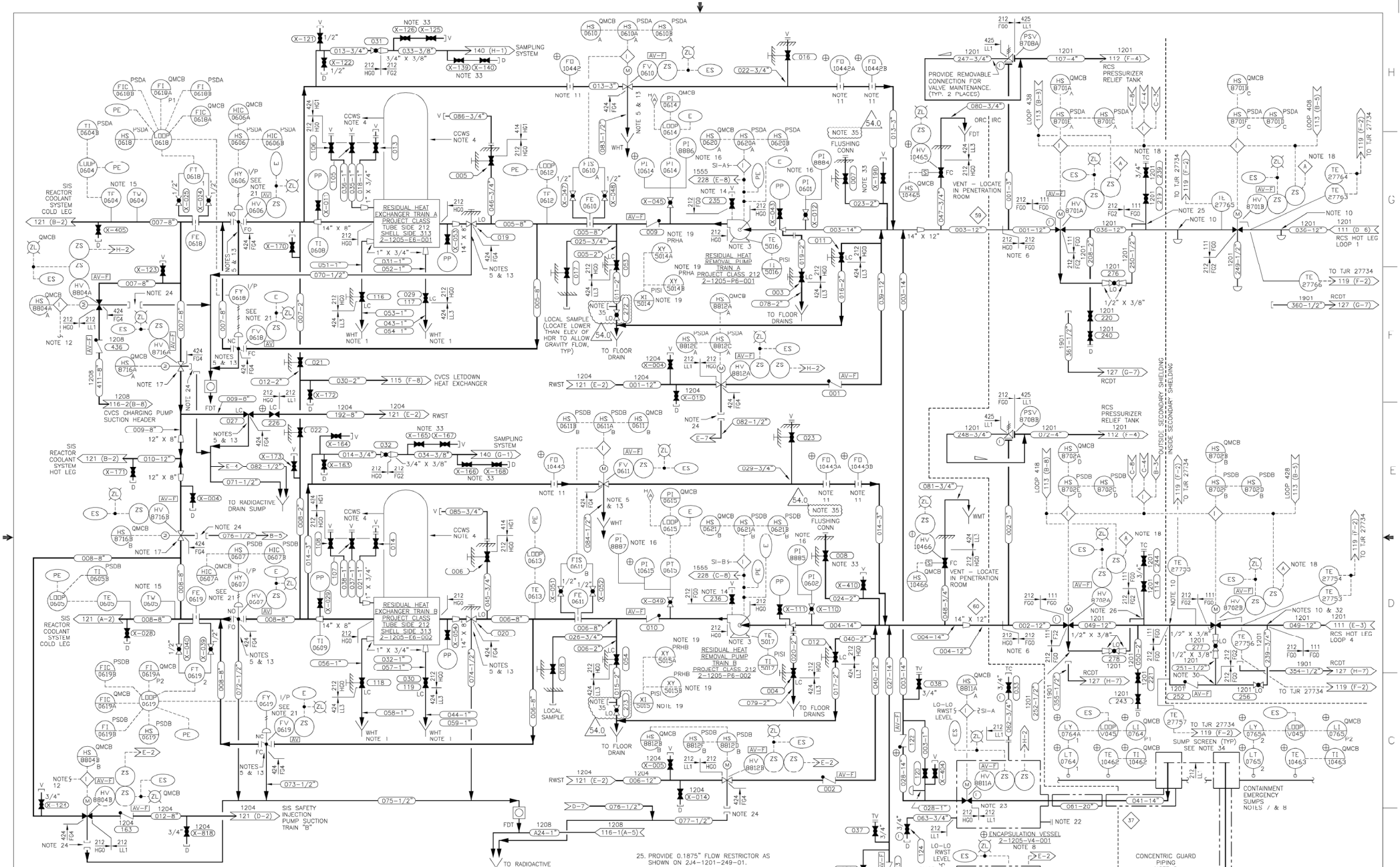

NOTES:

1. FOR DRAIN HEADER INFORMATION SEE DWGS 2X4DB143, 144-1.
2. ALL EQUIPMENT AND VALVES FURNISHED BY WESTINGHOUSE EXCEPT: (1) ALL PIPING AND ALL MANUAL VALVES 2" AND SMALLER, AND (2) EQUIPMENT MARKED ⊕.
3. FOR PUMP AND MOTOR COOLING WATER CONNECTIONS, SEE DWGS 2X4DB134 & 2X4DB137.
4. FOR HEAT EXCHANGER SHELL SIDE CONNECTIONS SEE DWG 2X4DB137.
5. PROVIDE 12" REMOVABLE SPOOL.
6. MAKE PIPING MATERIAL CLASS CHANGE AT FIRST WELD OF PENETRATION SLEEVE INSIDE THE CONTAINMENT.
7. INSTALL 150# R.F. FLANGE ON INLET OF EACH 14"ø PIPE FOR PERIODIC TESTING. PROVIDE ONE MATING BLIND FLANGE TO BE DRILLED AND TAPPED FOR TEST CONNECTION. MATING FLANGE MUST BE REMOVED FOR NORMAL OPERATION.
8. ENCAPSULATION VESSELS, GUARD PIPING AND CTMT BLDG. SUMPS ARE PROJECT CLASS 01C. GUARD PIPING IS CONSTRUCTED TO CLASS 2 EXCEPT SPECIAL NDE5211 100 (3) SHALL APPLY.
9. PORTIONS OF THIS SYSTEM ARE SUSPECTED TO CAUSE STRESS CORROSION CRACKING. REFER TO THE APPLICABLE DESIGN DRAWING AND PIPING MATERIAL CLASSIFICATIONS FOR MATERIAL AND HEAT TREATMENT REQUIREMENTS.
10. PROVIDE 0.375" ID FLOW RESTRICTION AS SHOWN ON DWG CX4DG001.
11. THE ORIFICE SHOULD BE LOCATED ON A HORIZONTAL STRETCH OF PIPE.
12. REFER TO ELEMENTARY DIAGRAM FOR THE DETAILED INTERLOCK CONNECTION.
13. FOR TYPICAL DETAIL SEE STD. DWG AX4DD000.
14. HIGH POINT VENT VALVE (BECHTEL-FURNISHED) FOR SEAL PIPING, SEE X8AF02-25.
15. TE IS A SURFACE TYPE CLAMP ON RTD, TW IS INSTALLED BUT NOT USED.
16. FOR ISI TESTING ONLY. INSTRUMENTATION ISOLATION VALVES NORMALLY IN CLOSED POSITION.
17. VENT HOLE IS DRILLED ON RHR PUMP SIDE OF DISC.
18. ALARM ON OPEN HOT LEG VALVE AND HIGH RCS PRESSURE.
19. ABANDON IN PLACE, INSTRUMENTS XI5015, XI5014, XY5015A, XY5015B, XE5014A, XE5014B.
20. DELETED.
21. AIR ISOLATED DURING POWER OPERATION TO ENSURE VALVE FAILS TO ITS SAFETY POSITION (FULL OPEN OR FULL CLOSED).
22. 4" VIEW PORT TO BE USED TO VERIFY MOTOR OPERATED VALVE STROKE TEST WITHOUT REMOVING THE VESSEL LID.
23. VENT HOLE IS DRILLED ON CONTAINMENT SIDE OF DISC.
24. A SECTION OF THE LEAKOFF LINE HAS BEEN REMOVED AND BOTH ENDS CAPPED.
25. PROVIDE 0.1875" FLOW RESTRICTOR AS SHOWN ON 2J4-1201-249-01.
26. PROVIDE 0.1875" FLOW RESTRICTOR AS SHOWN ON 2J4-1201-251-01.
27. DELETED.
28. DELETED.
29. DELETED.
30. FLOW RESTRICTOR PROVIDED AS SHOWN ON 2J4-1201-251-01.
31. DELETED
32. 0.25 INCH FLOW RESTRICTOR AS SHOWN ON 2K4-1201-049-02.
33. THESE ARE KEROTEST VALVES AND MAY NOT ALLOW REVERSE FLOW.
34. SUMP SCREEN TAG NO'S. 2-1205-G2-001 (TRAIN "A") AND 2-1205-G2-002 (TRAIN "B")
35. CONNECTION USED TO SUPPORT FLEX COPING STRATEGY PER NRC ORDER EA-12-049. CONNECTIONS LISTED BELOW ARE ADEQUATELY ROBUST TO MEET FLEX REQUIREMENTS:

VALVE	REF. CALC
2-1205-U4-272	BC00703
2-1205-U4-273	BC00723

REFER TO WESTINGHOUSE FLOW DIAGRAM DWG. NO. 1094E72

SOUTHERN COMPANY

GEORGIA POWER COMPANY
ALVIN W. VOGTLE NUCLEAR PLANT

P & I DIAGRAM
RESIDUAL HEAT REMOVAL
SYSTEM NO. 1205

CAD 2X4DB122
ACADZ007 LEH – 08

THIS DOCUMENT CONTAINS PROPRIETARY, CONFIDENTIAL, AND/OR TRADE SECRET INFORMATION OF THE SUBSIDIARIES OF THE SOUTHERN COMPANY OR OF THIRD PARTIES. IT IS INTENDED FOR USE ONLY BY EMPLOYEES OF, OR AUTHORIZED CONTRACTORS OF, THE SUBSIDIARIES OF THE SOUTHERN COMPANY. UNAUTHORIZED POSSESSION, USE, DISTRIBUTION, COPYING, DISSEMINATION, OR DISCLOSURE OF ANY PORTION HEREOF IS PROHIBITED.

NO.	VERSIONS	DATE	DR	CHK	APPV	DTL
54.0	REVISED PER ABN SNC475966M002, VER. 1.0	10/20/14	LEH	ALM	MWD	

SCALE: NONE
JOB NO.10604
DRAWING NO. 2X4DB122
VER. 54.0
SIZE E 34X44
DRAWING CATEGORY: CRITICAL

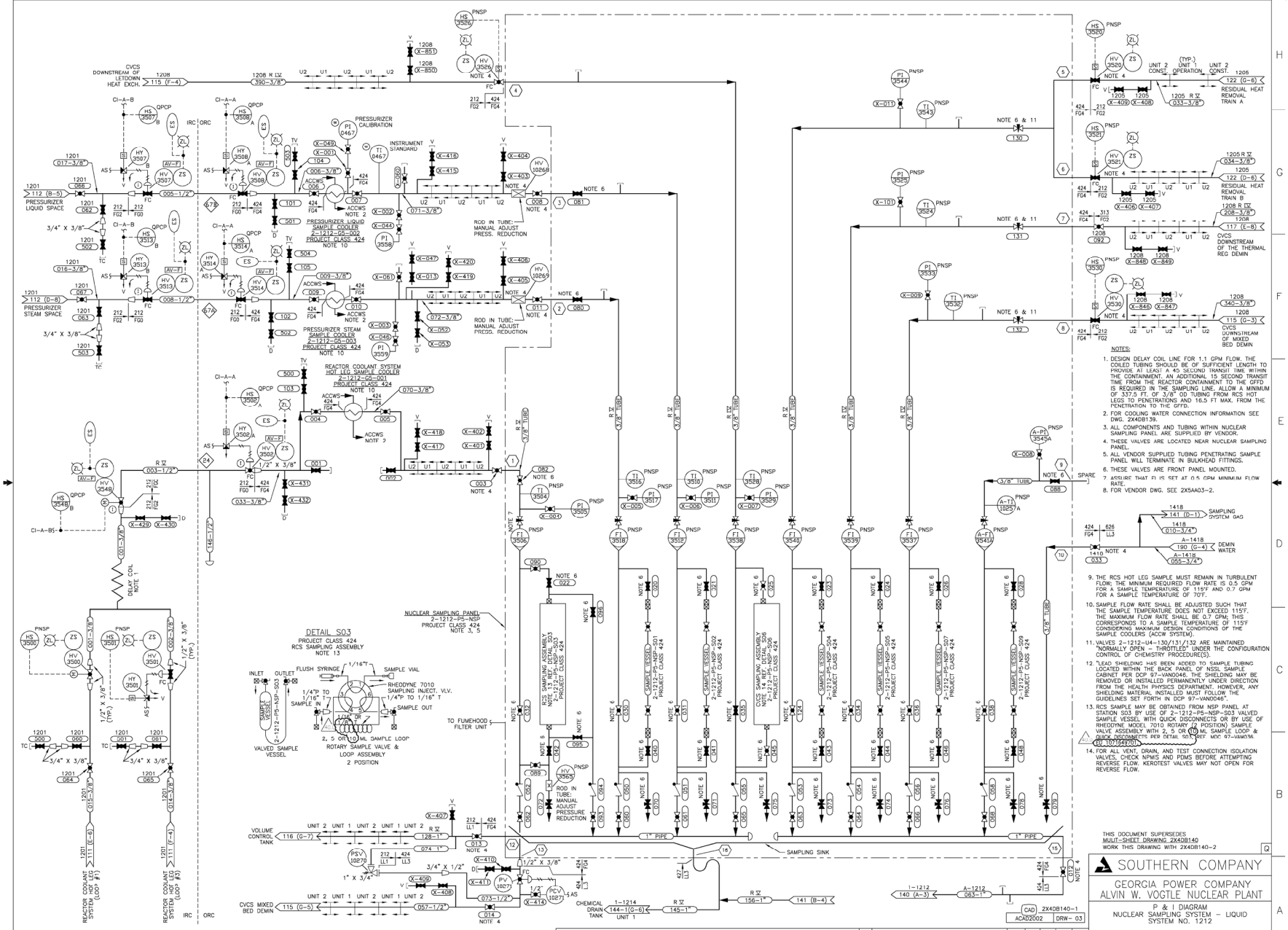

NOTES:

1. DESIGN DELAY COIL LINE FOR 1.1 GPM FLOW. THE COILED TUBING SHOULD BE OF SUFFICIENT LENGTH TO PROVIDE AT LEAST A 45 SECOND TRANSIT TIME WITHIN THE CONTAINMENT. AN ADDITIONAL 15 SECOND TRANSIT TIME FROM THE REACTOR CONTAINMENT TO THE GFFD IS REQUIRED IN THE SAMPLING LINE. ALLOW A MINIMUM OF 337.5 FT. OF 3/8" OD TUBING FROM RCS HOT LEGS TO PENETRATIONS AND 16.5 FT MAX. FROM THE PENETRATION TO THE GFFD.
2. FOR COOLING WATER CONNECTION INFORMATION SEE DWG. 2X4DB139.
3. ALL COMPONENTS AND TUBING WITHIN NUCLEAR SAMPLING PANEL ARE SUPPLIED BY VENDOR.
4. THESE VALVES ARE LOCATED NEAR NUCLEAR SAMPLING PANEL.
5. ALL VENDOR SUPPLIED TUBING PENETRATING SAMPLE PANEL WILL TERMINATE IN BULKHEAD FITTINGS.
6. THESE VALVES ARE FRONT PANEL MOUNTED.
7. ASSURE THAT FI IS SET AT 0.5 GPM MINIMUM FLOW RATE.
8. FOR VENDOR DWG. SEE 2X5AA03-2.
9. THE RCS HOT LEG SAMPLE MUST REMAIN IN TURBULENT FLOW; THE MINIMUM REQUIRED FLOW RATE IS 0.5 GPM FOR A SAMPLE TEMPERATURE OF 115°F AND 0.7 GPM FOR A SAMPLE TEMPERATURE OF 70°F.
10. SAMPLE FLOW RATE SHALL BE ADJUSTED SUCH THAT THE SAMPLE TEMPERATURE DOES NOT EXCEED 115°F. THE MAXIMUM FLOW RATE SHALL BE 0.7 GPM; THIS CORRESPONDS TO A SAMPLE TEMPERATURE OF 115°F CONSIDERING MAXIMUM DESIGN CONDITIONS OF THE SAMPLE COOLERS (ACCW SYSTEM).
11. VALVES 2-1212-U4-130/131/132 ARE MAINTAINED "NORMALLY OPEN – THROTTLED" UNDER THE CONFIGURATION CONTROL OF CHEMISTRY PROCEDURE(S).
12. "LEAD SHIELDING HAS BEEN ADDED TO SAMPLE TUBING LOCATED WITHIN THE BACK PANEL OF NSSL SAMPLE CABINET PER DCP 97-VAN0046. THE SHIELDING MAY BE REMOVED OR INSTALLED PERMANENTLY UNDER DIRECTION FROM THE HEALTH PHYSICS DEPARTMENT. HOWEVER, ANY SHIELDING MATERIAL INSTALLED MUST FOLLOW THE GUIDELINES SET FORTH IN DCP 97-VAN0046".
13. RCS SAMPLE MAY BE OBTAINED FROM NSP PANEL AT STATION S03 BY USE OF 2-1212-P5-NSP-S03 VALVED SAMPLE VESSEL WITH QUICK DISCONNECTS OR BY USE OF RHEODYNE MODEL 7010 ROTARY (2 POSITION) SAMPLE VALVE ASSEMBLY WITH 2, 5 OR 10 ML SAMPLE LOOP & QUICK DISCONNECTS PER DETAIL S03 REF MDC 97-VAN0036.
14. FOR ALL VENT, DRAIN, AND TEST CONNECTION ISOLATION VALVES, CHECK NPMIS AND PDMS BEFORE ATTEMPTING REVERSE FLOW. KEROTEST VALVES MAY NOT OPEN FOR REVERSE FLOW.

THIS DOCUMENT SUPERSEDES MULTI-SHEET DRAWING 2X4DB140
WORK THIS DRAWING WITH 2X4DB140-2

SOUTHERN COMPANY

GEORGIA POWER COMPANY
ALVIN W. VOGTLE NUCLEAR PLANT

P & I DIAGRAM
NUCLEAR SAMPLING SYSTEM – LIQUID
SYSTEM NO. 1212

CAD 2X4DB140-1
ACAD2002 DRW- 03

THIS DOCUMENT CONTAINS PROPRIETARY, CONFIDENTIAL, AND/OR TRADE SECRET INFORMATION OF THE SUBSIDIARIES OF THE SOUTHERN COMPANY OR OF THIRD PARTIES. IT IS INTENDED FOR USE ONLY BY EMPLOYEES OF, OR AUTHORIZED CONTRACTORS OF, THE SUBSIDIARIES OF THE SOUTHERN COMPANY. UNAUTHORIZED POSSESSION, USE, DISTRIBUTION, COPYING, DISSEMINATION, OR DISCLOSURE OF ANY PORTION HEREOF IS PROHIBITED.

NO.	VERSIONS	DATE	DR	CHK	APPV	DTL
40.0	REVISED PER ABN- V01682, VER. 1.0	01-07-09	DRW	SRG	PML	X

SCALE: NONE
SIZE E 34X44
DRAWING NO. 2X4DB140-1
VER. 40.0
JOB NO.10604
DRAWING CATEGORY: CRITICAL

DETAIL S06

PROJECT CLASS 424
CVCS SAMPLING ASSEMBLY

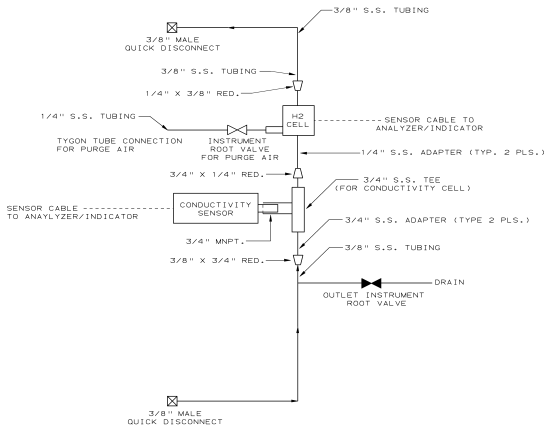

CONINUATION OF NOTES:

14. IN-LINE HYDROGEN ANALYZERS AND CONDUCTIVITY ELEMENTS HAVE REPLACED THE "SAMPLE BOMB" AND WILL PROVIDE CONTINUOUS SAMPLE CAPABILITY. REFERENCE MOC 98-VAM045.

THIS DOCUMENT SUPERSEDES MULTI-SHEET DRAWING 2X4DB140
WORK THIS DRAWING WITH: 2X4DB140-1
32

SOUTHERN COMPANY SERVICES, INC.
BIRMINGHAM, ALABAMA

GEORGIA POWER COMPANY
ALVIN W. VOGTLE NUCLEAR PLANT

P & I DIAGRAM
NUCLEAR SAMPLING SYSTEM-LIQUID
SYSTEM NO. 1212

SCALE: NONE	DRAWING NO.	REV.
JOB NO.10604	32 2X4DB140-2	32

THIS DOCUMENT CONTAINS PROPRIETARY, CONFIDENTIAL, AND/OR TRADE SECRET INFORMATION OF THE SUBSIDIARIES OF THE SOUTHERN COMPANY OR OF THIRD PARTIES. IT IS INTENDED FOR USE ONLY BY EMPLOYEES OF, OR AUTHORIZED CONTRACTORS OF, THE SUBSIDIARIES OF THE SOUTHERN COMPANY. UNAUTHORIZED POSSESSION, USE, DISTRIBUTION, COPYING, DISSEMINATION, OR DISCLOSURE OF ANY PORTION HEREOF IS PROHIBITED.

NO.	REVISIONS	DATE	DR	CHK	APPV	DTL
3						
2						
1	INCORPORATED PER REA 01-VAA037	06/04/01	JGM	JRP	PDG	JLM
0	ISSUED FOR CONSTRUCTION	SEE MICROFILM FOR SIGNATURES				

SIZE E 34X44

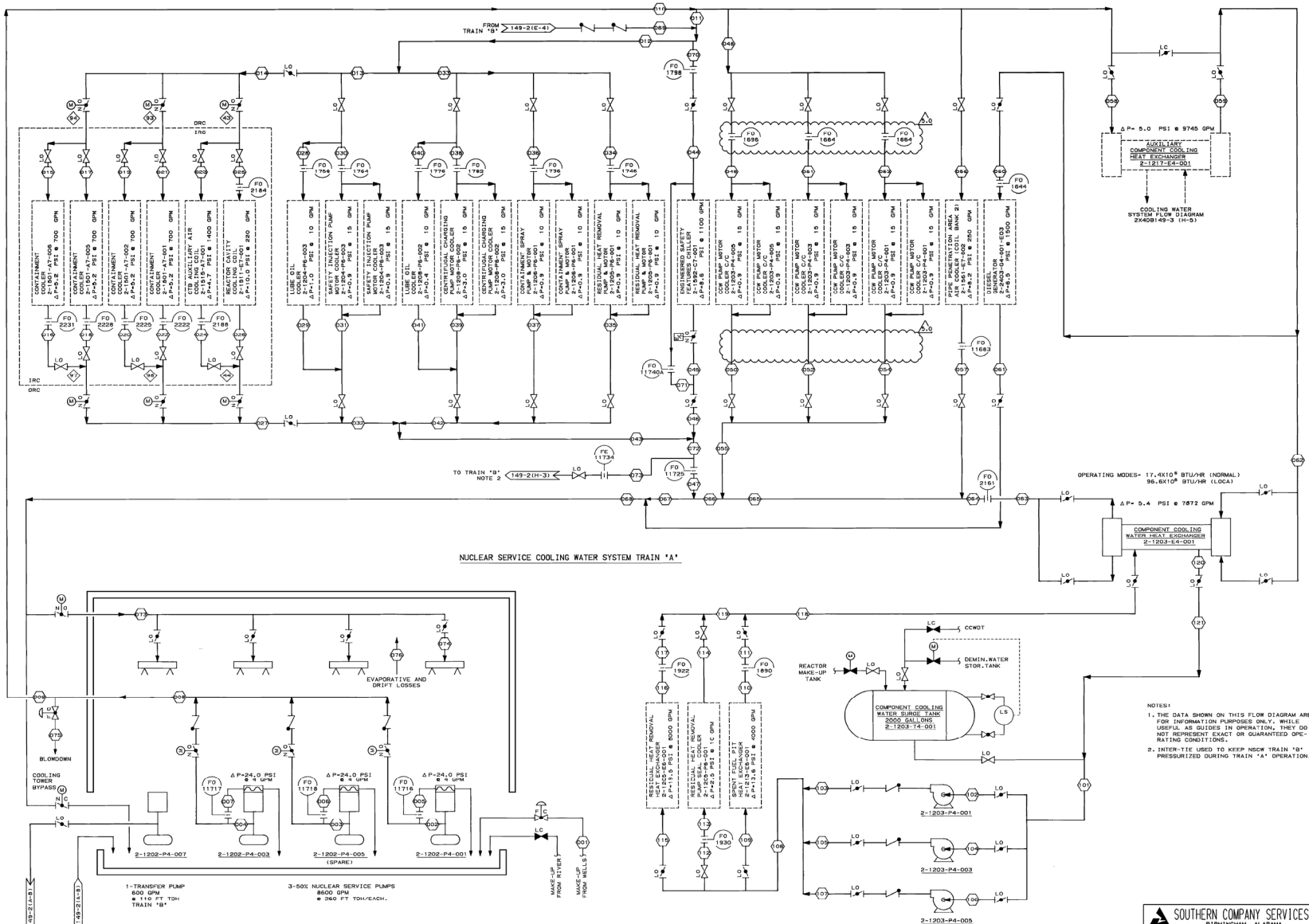

NOTES:

1. THE DATA SHOWN ON THIS FLOW DIAGRAM ARE FOR INFORMATION PURPOSES ONLY. WHILE USEFUL AS GUIDES IN OPERATION, THEY DO NOT REPRESENT EXACT OR GUARANTEED OPERATING CONDITIONS.
2. INTER-TIE USED TO KEEP NSCW TRAIN "B" PRESSURIZED DURING TRAIN "A" OPERATION.

SOUTHERN COMPANY SERVICES, INC.
BIRMINGHAM, ALABAMA

GEORGIA POWER COMPANY
ALVIN W. VOGTLE NUCLEAR PLANT

FLOW DIAGRAM
COOLING WATER SYSTEM
SYSTEMS 1202,1203,1217

SCALE: NONE	DRAWING NO.	VER.
JOB NO.10604	2X4DB149-1	5.0

SIZE E 34x44

DWG CATEGORY: CRITICAL

NO.	VERSIONS	DATE	DR	CHK	APPV
5.0	REVISED PER ABN-V02460, VER.1.0	3-15-11	BgT	DHH	AAN

THIS DOCUMENT CONTAINS PROPRIETARY, CONFIDENTIAL, AND/OR TRADE SECRET INFORMATION OF THE SUBSIDIARIES OF THE SOUTHERN COMPANY OR OF THIRD PARTIES. IT IS INTENDED FOR USE ONLY BY EMPLOYEES OF, OR AUTHORIZED CONTRACTORS OF, THE SUBSIDIARIES OF THE SOUTHERN COMPANY. UNAUTHORIZED POSSESSION, USE, DISTRIBUTION, COPYING, DISSEMINATION, OR DISCLOSURE OF ANY PORTION HEREOF IS PROHIBITED.

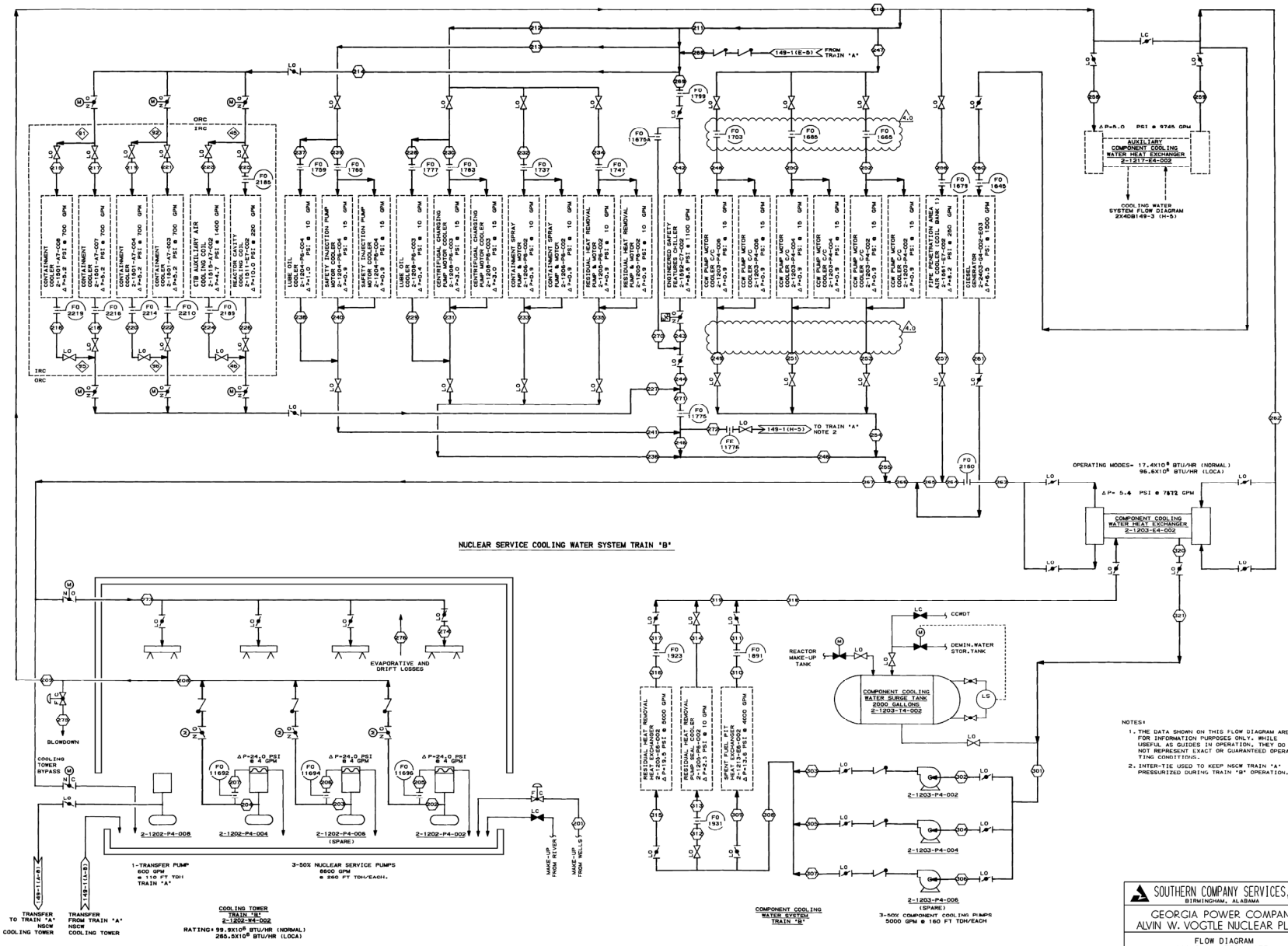

NOTES:

1. THE DATA SHOWN ON THIS FLOW DIAGRAM ARE FOR INFORMATION PURPOSES ONLY. WHILE USEFUL AS GUIDES IN OPERATION, THEY DO NOT REPRESENT EXACT OR GUARANTEED OPERATING CONDITIONS.
2. INTER-TIE USED TO KEEP NSCW TRAIN "A" PRESSURIZED DURING TRAIN "B" OPERATION.

SOUTHERN COMPANY SERVICES, INC.
BIRMINGHAM, ALABAMA

GEORGIA POWER COMPANY
ALVIN W. VOGTLE NUCLEAR PLANT

FLOW DIAGRAM
COOLING WATER SYSTEM
SYSTEMS 1202,1203,1217

SCALE: NONE	DRAWING NO.	VER.
	2X4DB149-2	4.0
	JOB NO.10604	

SIZE E 34x44

DWG CATEGORY: CRITICAL

NO.	VERSIONS	DATE	DR	CHK	APPV
4.0	REVISED PER ABN-V02460, VER.1.0	3-15-11	BGT	DHH	AAN

THIS DOCUMENT CONTAINS PROPRIETARY, CONFIDENTIAL, AND/OR TRADE SECRET INFORMATION OF THE SUBSIDIARIES OF THE SOUTHERN COMPANY OR OF THIRD PARTIES. IT IS INTENDED FOR USE ONLY BY EMPLOYEES OF, OR AUTHORIZED CONTRACTORS OF, THE SUBSIDIARIES OF THE SOUTHERN COMPANY. UNAUTHORIZED POSSESSION, USE, DISTRIBUTION, COPYING, DISSEMINATION, OR DISCLOSURE OF ANY PORTION HEREOF IS PROHIBITED.

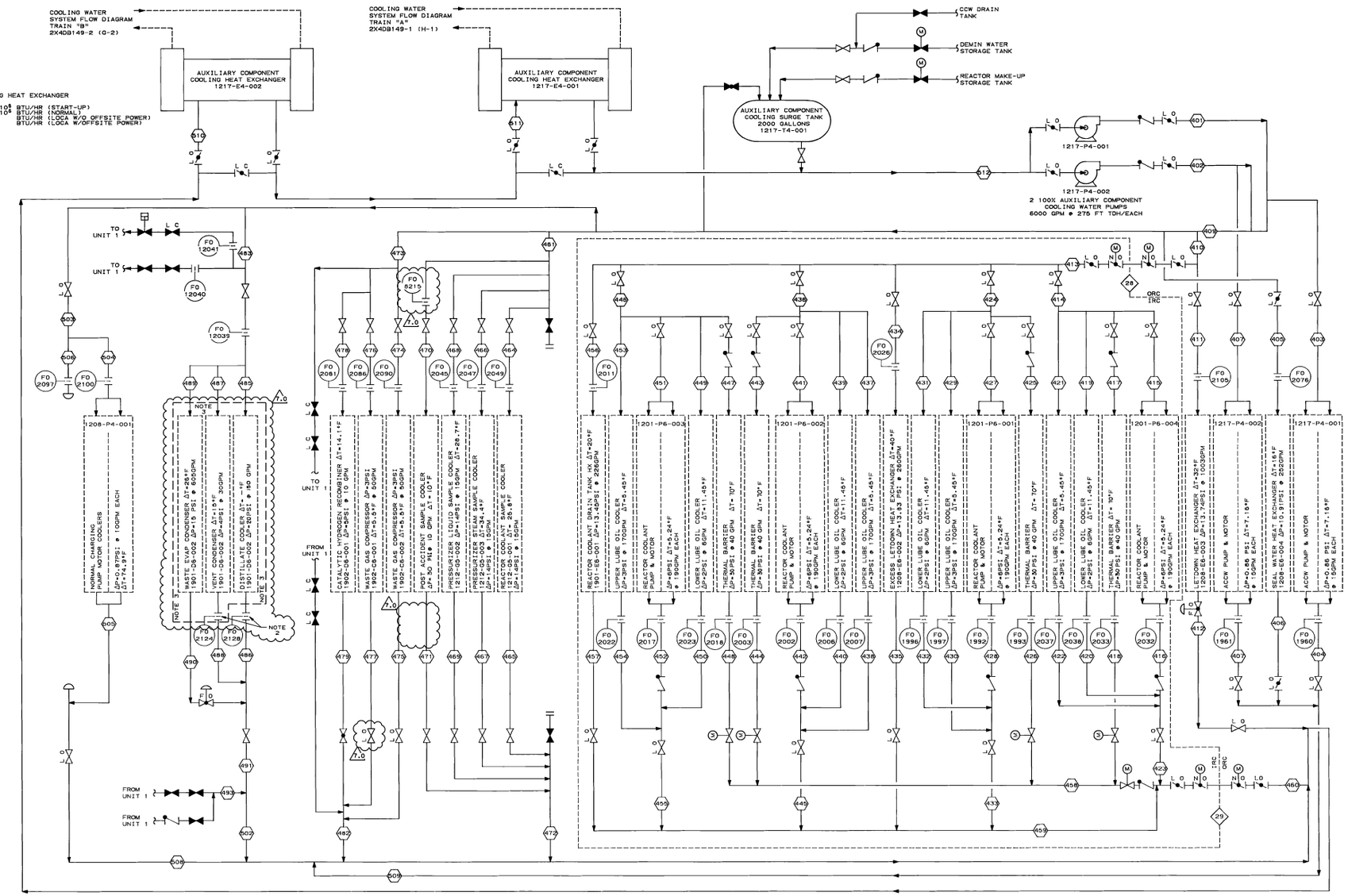

AUXILIARY COMPONENT COOLING WATER SYSTEM

NOTE

1. THE DATA SHOWN ON THIS FLOW DIAGRAM ARE FOR INFORMATION PURPOSES ONLY, & WHILE USEFUL AS GUIDES IN OPERATION, DO NOT REPRESENT EXACT OR GUARANTEED OPERATING CONDITIONS.
2. BLANK PLATE
3. -RETIRED IN PLACE-

SOUTHERN COMPANY SERVICES, INC.
BIRMINGHAM, ALABAMA

GEORGIA POWER COMPANY
ALVIN W. VOGTLE NUCLEAR PLANT

FLOW DIAGRAM
COOLING WATER SYSTEM
SYSTEMS 1202, 1203, 1217

SCALE: NONE	DRAWING NO.	VER.
JOB NO.10604	2X4DB149-3	7.0

NO.	VERSIONS	DATE	DR	CHK	APPV
7.0	REVISED PER ABN-V02460, VER.1.0	3-15-11	BgT	DHH	AAN

THIS DOCUMENT CONTAINS PROPRIETARY, CONFIDENTIAL, AND/OR TRADE SECRET INFORMATION OF THE SUBSIDIARIES OF THE SOUTHERN COMPANY OR OF THIRD PARTIES. IT IS INTENDED FOR USE ONLY BY EMPLOYEES OF, OR AUTHORIZED CONTRACTORS OF, THE SUBSIDIARIES OF THE SOUTHERN COMPANY. UNAUTHORIZED POSSESSION, USE, DISTRIBUTION, COPYING, DISSEMINATION, OR DISCLOSURE OF ANY PORTION HEREOF IS PROHIBITED.

SIZE E 34X44 DWG CATEGORY: CRITICAL

NUCLEAR SERVICE COOLING WATER SYSTEM TRAIN "A" (NOTE 2)

MODES OF OPERATION	PARAMETER		001	002	003	004	005	006	007	008	009	010	011	012	013	014	015	016	017	018	019	020	021	022	023	024	025	026	027	028	029	030	031	032	033	034	035	036	037	038	039	040	041	042	043	044	045	046	047	048	049	050	051	052	053	054	055	056
100 % POWER	FLOW	GPM	267	8700	0	8700	5	0	5	17390	17330	17330	6558	4863	4761	4710	746	746	746	746	746	746	746	1491	1491	234	234	4710	13	38	38	4760	102	26	26	26	26	26	37	38	13	13	102	4863	1695	1100	1695	6558	114	38	38	38	38	38	38	114	268
	TEMP	*F	70	90	90	90	90	90	90	90	90	90	90	90	90	90	90	97	90	97	90	97	90	97	90	96	90	94	97	90	90	90	90	97	90	90	90	90	90	90	97	90	102	94	97	90	90	90	95	90	90	97	90	97	90	90	95	90
PEAK MSLBA CONDITION (NOTE 4)	FLOW	GPM	0	8200	0	8200	6	0	6	16389	16389	16389	5034	3318	3200	3146	787	787	787	787	787	787	787	0	0	0	0	3146	14	14	40	40	3200	107	27	27	27	27	40	40	13	13	107	3307	1727	1100	1727	5034	120	40	40	40	40	40	40	120	283
	TEMP	*F	70	92	92	92	92	92	92	92	92	92	92	92	92	92	92	255	92	255	92	255	92	255	92	92	92	92	255	92	95	92	96	252	92	92	92	119	92	97	92	98	92	104	104	247	92	101	98	196	92	92	95	92	95	92	92	94	92
PEAK LOCA CONDITION (NOTE 5)	FLOW	GPM	0	8200	0	8200	6	0	6	16389	16389	16389	5034	3318	3200	3146	787	787	787	787	787	787	787	0	0	0	0	3146	14	14	40	40	3200	107	27	27	27	27	40	40	13	13	107	3307	1727	1100	1727	5034	120	40	40	40	40	40	40	120	283
	TEMP	*F	70	91	91	91	91	91	91	91	91	91	91	91	91	91	91	266	91	266	91	266	91	266	91	91	91	91	266	91	94	91	95	263	91	91	91	118	91	96	91	97	91	102	103	258	91	100	97	202	91	91	94	91	94	91	91	93	91
RECIRC. MODE POST-LOCA (NOTE 6)	FLOW	GPM	0	8200	0	8200	6	0	6	16389	16389	16389	5034	3318	3200	3146	787	787	787	787	787	787	787	0	0	0	0	3146	14	14	40	40	3200	107	27	27	27	27	40	40	13	13	107	3307	1727	1100	1727	5034	120	40	40	40	40	40	40	120	283
	TEMP	*F	70	95	95	95	95	95	95	95	95	95	95	95	95	95	95	242	95	242	95	242	95	242	95	95	95	95	242	95	99	95	99	239	95	95	95	123	95	101	95	102	95	107	107	235	95	105	101	188	95	95	99	95	99	95	95	98	95

7.0 7.0 7.0

NUCLEAR SERVICE COOLING WATER SYSTEM TRAIN "A" (CONTINUED) (NOTE 2)

MODES OF OPERATION	PARAMETER		057	058	059	060	061	062	063	064	065	066	067	068	069	070	071	072	073	074	075	076
100 % POWER	FLOW	GPM	268	10390	10390	1718	1718	8672	8672	8672	8940	9054	15612	17330	0	595	6558	0	17330	4333	65	201
	TEMP	*F	90	90	98	98	98	98	102	102	102	102	99	99	95	90	95	95	99	99	90	90
PEAK MSLBA CONDITION (NOTE 4)	FLOW	GPM	283	10952	10953	1811	1811	9141	9141	9141	9424	9544	14578	16389	0	627	5034	0	16388	4097	0	472
	TEMP	*F	101	92	93	93	112	93	146	146	145	144	133	131	92	92	196	196	131	131	92	104
PEAK LOCA CONDITION (NOTE 5)	FLOW	GPM	283	10952	10953	1811	1811	9141	9141	9141	9424	9544	14578	16389	0	627	5034	0	16389	4097	0	477
	TEMP	*F	100	91	91	91	110	91	95	95	95	95	132	129	91	91	202	202	129	129	91	104
RECIRC. MODE POST-LOCA (NOTE 6)	FLOW	GPM	283	10952	10953	1811	1811	9141	9141	9141	9424	9544	14578	16389	0	627	5034	0	16389	4097	0	432
	TEMP	*F	105	95	95	95	114	95	129	129	128	128	148	144	95	95	188	188	144	144	95	110

7.0 7.0 7.0

COMPONENT COOLING WATER SYSTEM TRAIN "A"

MODES	PARAMETER		101	102	103	104	105	106	107	108	109	110	111	112	113	114	115	116	117	118	119	120	121
100% POWER	FLOW	GPM	8979	4490	4490	4490	4490	0	0	8979	3982	3988	3988	10	10	10	4987	4987	4987	8987	4997	8979	8979
	TEMP	*F	101	101	101	101	101	101	101	101	101	115	115	101	101	101	101	101	101	112	101	101	101
2 TRAIN START OF RECIRC POST-LOCA	FLOW	GPM	8978	4489	4489	4489	4489	0	0	8978	3981	3985	3985	10	10	10	4987	5062	5062	9057	5070	8978	8978
	TEMP	*F	102	102	102	102	102	102	102	102	102	106	106	102	102	107	102	156	156	134	156	102	102
1 TRAIN COOLDOWN, OFFSITE POWER AVAIL.	FLOW	GPM	9000	4500	4500	4500	4500	0	0	9000	3991	4000	4000	10	10	10	4999	5090	5090	9094	5100	9000	9000
	TEMP	*F	120	120	120	120	120	120	120	120	120	133	133	120	120	125	120	189	189	164	189	120	120
SINGLE TRAIN COOLDN W/LOP	FLOW	GPM	9000	4500	4500	4500	4500	0	0	9000	3991	4000	4000	10	10	10	4999	5090	5090	9094	5100	9000	9000
	TEMP	*F	120	120	120	120	120	120	120	120	120	133	133	120	120	126	120	207	207	174	207	120	120

7.0

NUCLEAR SERVICE COOLING WATER SYSTEM TRAIN "B" (NOTE 2)

MODES OF OPERATION	PARAMETER		201	202	203	204	205	206	207	208	209	210	211	212	213	214	215	216	217	218	219	220	221	222	223	224	225	226	227	228	229	230	231	232	233	234	235	236	237	238	239	240	241	242	243	244	245	246	247	248	249	250	251	252	253	254	255	256
100 % POWER	FLOW	GPM	267	8700	0	8700	5	0	5	17390	17330	17330	6558	102	51	4710	746	746	746	746	746	746	746	1491	1491	234	234	4710	13	13	37	37	26	26	26	26	102	13	13	38	38	51	1100	1100	1695	6456	6558	114	38	38	38	38	38	38	114	6672	268
	TEMP	*F	70	90	90	90	90	90	90	90	90	90	90	90	90	90	90	97	90	97	90	97	90	97	90	96	90	94	97	90	102	90	97	90	90	90	90	94	90	90	90	90	90	90	90	90	95	95	90	90	97	90	97	90	90	95	95	90
PEAK MSLBA CONDITION (NOTE 4)	FLOW	GPM	0	8200	0	8200	6	0	6	16389	16389	16389	5034	107	54	3146	787	787	787	787	787	787	787	0	0	0	0	3146	14	13	40	40	27	27	27	27	107	14	14	40	40	54	1100	1100	1727	4927	5034	120	40	40	40	40	40	40	120	5154	283
	TEMP	*F	70	92	92	92	92	92	92	92	92	92	92	92	92	92	92	255	92	255	92	255	92	255	92	92	92	92	255	92	104	92	98	92	97	92	119	104	92	95	92	96	96	92	101	98	198	196	92	92	95	92	95	92	92	94	193	92
PEAK LOCA CONDITION (NOTE 5)	FLOW	GPM	0	8200	0	8200	6	0	6	16389	16389	16389	5034	107	54	3146	787	787	787	787	787	787	787	0	0	0	0	3146	14	13	40	40	27	27	27	27	107	14	14	40	40	54	1100	1100	1727	4927	5034	120	40	40	40	40	40	40	120	5154	283
	TEMP	*F	70	91	91	91	91	91	91	91	91	91	91	91	91	91	91	266	91	266	91	266	91	266	91	91	91	91	266	91	102	91	97	91	96	91	118	103	91	94	91	95	94	91	100	97	205	202	91	91	94	91	94	91	91	93	200	91
RECIRC. MODE POST-LOCA (NOTE 6)	FLOW	GPM	0	8200	0	8200	6	0	6	16389	16389	16389	5034	107	54	3146	787	787	787	787	787	787	787	0	0	0	0	3146	14	13	40	40	27	27	27	27	107	14	14	40	40	54	1100	1100	1727	4927	5034	120	40	40	40	40	40	40	120	5154	283
	TEMP	*F	70	95	95	95	95	95	95	95	95	95	95	95	95	95	95	242	95	242	95	242	95	242	95	95	95	95	242	95	107	95	102	95	101	95	123	107	95	99	95	99	99	95	105	101	190	188	95	95	99	95	99	95	95	98	186	95

7.0 7.0 7.0

NUCLEAR SERVICE COOLING WATER SYSTEM TRAIN "B" (CONTINUED) (NOTE 2)

MODES OF OPERATION	PARAMETER		257	258	259	260	261	262	263	264	265	266	267	268	269	270	271	272	273	274	275	276
100 % POWER	FLOW	GPM	268	10390	10390	1718	1718	8672	8672	8672	8940	10658	17330	0	1695	595	6405	0	17330	4333	65	201
	TEMP	*F	90	90	98	98	98	98	102	102	102	101	99	90	90	90	95	95	99	99	90	90
PEAK MSLBA CONDITION (NOTE 4)	FLOW	GPM	283	10952	10952	1811	1811	9141	9141	9141	9424	11235	16389	0	1727	627	4873	0	16389	4097	0	472
	TEMP	*F	101	92	93	93	112	93	146	146	145	139	131	92	92	92	199	199	131	131	92	104
PEAK LOCA CONDITION (NOTE 5)	FLOW	GPM	283	10952	10952	1811	1811	9141	9141	9141	9424	11235	16389	0	1727	627	4873	0	16389	4097	0	477
	TEMP	*F	100	91	91	91	110	91	95	95	95	97	129	91	91	91	206	206	129	129	91	104
RECIRC. MODE POST-LOCA (NOTE 6)	FLOW	GPM	283	10952	10952	1811	1811	9141	9141	9141	9424	11235	16389	0	1727	627	4873	0	16389	4097	0	432
	TEMP	*F	105	95	95	95	114	95	129	129	128	125	144	95	95	95	191	191	144	144	95	110

7.0 7.0

COMPONENT COOLING WATER SYSTEM TRAIN "B"

MODES	PARAMETER		301	302	303	304	305	306	307	308	309	310	311	312	313	314	315	316	317	318	319	320	321
100% POWER	FLOW	GPM	8979	4490	4490	4490	4490	0	0	8979	3982	3988	3988	10	10	10	4987	4987	4987	8987	4997	8979	8979
	TEMP	*F	101	101	101	101	101	101	101	101	101	115	115	101	101	101	101	101	101	112	101	101	101
2 TRAIN START OF RECIRC POST-LOCA	FLOW	GPM	8978	4489	4489	4489	4489	0	0	8978	3981	3985	3985	10	10	10	4987	5062	5062	9057	5070	8978	8979
	TEMP	*F	102	102	102	102	102	102	102	102	102	106	106	102	102	107	102	156	156	134	156	102	102
1 TRAIN COOLDOWN, OFFSITE POWER AVAIL.	FLOW	GPM	9002	4501	4501	4501	4501	0	0	9002	3992	4000	4000	10	10	10	5000	5077	5077	9167	5175	9002	9002
	TEMP	*F	120	120	120	120	120	120	120	120	120	133	133	120	120	125	120	189	189	164	189	120	120
SINGLE TRAIN COOLDN W/LOP	FLOW	GPM	9002	4501	4501	4501	4501	0	0	9002	3992	4000	4000	10	10	10	5000	5077	5077	9167	5175	9002	9002
	TEMP	*F	120	120	120	120	120	120	120	120	120	133	133	120	120	126	120	207	207	174	207	120	120

7.0

AUXILIARY COMPONENT COOLING WATER SYSTEM (NOTE 3)

MODES OF OPERATION	PARAMETER		401	402	403	404	405	406	407	408	409	410	411	412	413	414	415	416	417	418	419	420	421	422	423	424	425	426	427	428	429	430	431	432	433	434	435	436	437	438	439	440	441	442	443	444	445	446	447	448	449	450	451	452	453	454	455	456
100 % POWER	FLOW	GPM	5741	0	35	35	278	278	35	35	5671	3154	262	262	2892	593	352	352	53	53	8	8	180	180	540	596	52	52	355	355	181	181	8	8	544	284	284	583	174	174	8	8	351	351	50	50	533	581	49	49	8	8	350	350	174	174	532	254
	TEMP	*F	105	105	105	105	105	119	105	111	105	105	105	155	105	105	105	111	105	158	105	115	105	110	111	105	105	158	105	111	105	110	105	115	111	105	105	105	105	110	105	115	105	111	105	161	111	105	105	162	105	115	105	111	105	110	111	105
START -UP	FLOW	GPM	6188	0	33	33	264	264	33	33	6122	3738	1003	1003	2735	561	333	333	50	50	8	8	171	171	511	564	49	49	336	336	171	171	8	8	515	269	269	552	165	165	8	8	332	332	47	47	504	550	47	47	8	8	331	331	164	164	503	240
	TEMP	*F	105	105	105	105	105	120	105	112	105	105	105	137	105	105	105	111	105	161	105	115	105	110	111	105	105	161	105	111	105	110	105	115	111	105	105	144	105	105	111	105	115	105	111	105	164	111	105	105	165	105	115	105	111	105	111	111	105
SHUT DOWN, LOP	FLOW	GPM	6282	0	33	33	260	260	33	33	6216	3862	1162	1162	2700	554	329	329	49	49	8	8	168	168	505	557	49	49	332	332	169	169	8	8	508	265	265	545	163	163	8	8	327	327	47	47	498	543	46	46	8	8	327	327	162	162	497	237
	TEMP	*F	105	105	105	105	105	120	105	112	105	105	105	105	105	105	105	105	105	162	105	105	105	105	105	105	105	162	105	105	105	105	105	105	105	105	105	105	105	105	105	105	105	105	105	165	105	105	105	166	105	105	105	105	105	105	105	105
HOT STANDBY WITH OFFSITE POWER	FLOW	GPM	5741	0	35	35	278	278	35	35	5671	3154	262	262	2892	593	352	352	53	53	8	8	180	180	540	596	52	52	355	355	181	181	8	8	544	284	284	583	174	174	8	8	351	351	50	50	533	581	49	49	8	8	350	350	174	174	532	254
	TEMP	*F	105	105	105	105	105	119	105	111	105	105	105	155	105	105	105	105	105	158	105	105	105	105	105	105	105	158	105	111	105	110	105	115	111	105	105	105	105	110	105	115	105	105	105	161	105	105	105	162	105	105	105	105	105	105	105	105

7.0

CONTINUATION OF AUXILIARY COMPONENT COOLING WATER SYSTEM (NOTE 3)

MODES OF OPERATION	PARAMETER		457	458	459	460	461	464	465	466	467	468	469	470	471	472	473	474	475	476	477	478	479	480 NOTE 7	481 NOTE 7	482	483	484 NOTE 7	485	486	487	488	489	490	491	492 NOTE 7	493 NOTE 7	494 NOTE 7	495 NOTE 7	496 NOTE 7	497 NOTE 7	498 NOTE 7	499 NOTE 7	500 NOTE 7	501 NOTE 7	502	503	504	505	506	508	509	510	511	512
100 % POWER	FLOW	GPM	254	204	2147	2892	102	18	18	19	19	23	23	17	17	102	137	56	56	56	56	12	12	12	12	137	1887	1020	0	0	0	0	1020	1020	1020	38	38	830	123	123	36	36	671	671	867	1887	112	23	23		112	348	5741	5741	5741
	TEMP	*F	123	160	111	115	105	105	126	105	132	105	124	105	105	121	105	105	110	105	105	105	116	105	116	109	105	105	NA	NA	NA	NA	105	105	105	105	121	105	105	118	105	118	105	118	105	126	115	105	105	107		113	116	117	105	105
START -UP	FLOW	GPM	240	193	2031	2735	97	17	17	18	18	22	22	16	16	97	130	53	53	53	53	12	12	12	12	130	1787	966	0	0	0	0	966	966	966	36	36	786	116	116	34	34	635	635	821	1787	107	21	21		107	330	6188	6188	6188
	TEMP	*F	110	163	115	118	105	105	128	105	134	105	125	105	105	122	105	105	110	105	105	105	117	105	117	109	105	105	NA	NA	NA	NA	105	105	105	105	122	105	105	118	105	118	105	130	127	115	105	105	107		113	117	120	105	105
SHUT DOWN, LOP	FLOW	GPM	237	191	2005	2700	95	17	17	18	18	21	21	16	16	95	128	52	52	52	52	12	12	12	12	128	1765	954	0	0	0	0	954	954	954	35	35	776	115	115	34	34	627	627	811	1765	105	21	21		105	326	6282	6282	6282
	TEMP	*F	105	164	105	109	105	105	105	105	105	105	105	105	105	105	105	105	105	105	105	105	105	105	105	105	105	105	NA	NA	NA	NA	105	105	105	105	105	105	105	118	105	118	105	118	105	105	105	105	105		105	117	107	105	105
HOT STANDBY WITH OFFSITE POWER	FLOW	GPM	254	204	2147	2892	102	18	18	19	19	23	23	17	17	102	137	56	56	56	56	12	12	12	12	137	1887	1020	0	0	0	0	1020	1020	1020	38	38	830	123	123	36	36	671	671	867	1887	112	23	23		112	348	5741	5741	5741
	TEMP	*F	105	160	105	110	105	105	126	105	132	105	124	105	105	121	105	105	110	105	105	105	116	105	105	108	105	105	NA	NA	NA	NA	105	105	105	105	121	105	105	118	105	118	105	128	126	115	105	105	107		113	116	114	105	105

7.0 7.0 7.0

NOTES:

1. THE DATA SHOWN ON THIS FLOW DIAGRAM ARE FOR INFORMATION PURPOSES ONLY. WHILE USEFUL AS GUIDES IN OPERATION, THEY DO NOT REPRESENT EXACT OR GUARANTEED OPERATING CONDITIONS.
2. ALL NSCW DATA SHOWN ARE FOR ONE-TRAIN OPERATION. WITH ALL ACCW HEAT LOADS ON THE OPERATING TRAIN.
3. ACCW DATA ASSUME ACCW HEAT LOADS REJECTED TO TRAIN B NSCW.
4. TEMPERATURES SHOWN HERE ARE THE MAXIMUM TEMPERATURES DURING THE MSLBA TRANSIENT. THE MAXIMUM TEMPERATURE AT EACH NODE MAY NOT OCCUR AT THE SAME TIME DURING THE TRANSIENT. THEREFORE THE INLET AND OUTLET TEMPERATURE DIFFERENCES DO NOT NECESSARILY REPRESENT THE ACTUAL TEMPERATURE RISES ACROSS THE COMPONENTS AT A SPECIFIC TIME. (REFER TO CALC. # X4C1202S18 FOR DETAILS).
5. TEMPERATURES SHOWN HERE ARE THE MAXIMUM TEMPERATURES DURING THE LOCA TRANSIENT. THE MAXIMUM TEMPERATURE AT EACH NODE MAY NOT OCCUR AT THE SAME TIME DURING THE TRANSIENT. THEREFORE THE INLET AND OUTLET TEMPERATURE DIFFERENCES DO NOT NECESSARILY REPRESENT THE ACTUAL TEMPERATURE RISES ACROSS THE COMPONENTS AT A SPECIFIC TIME. (REFER TO CALC. # X4C1202S17 FOR DETAILS).
6. TEMPERATURES SHOWN HERE ARE THE MAXIMUM TEMPERATURES DURING THE POST-LOCA, RECIRCULATION TRANSIENT. THE MAXIMUM TEMPERATURE AT EACH NODE MAY NOT OCCUR AT THE SAME TIME DURING THE TRANSIENT. THEREFORE THE INLET AND OUTLET TEMPERATURE DIFFERENCES DO NOT NECESSARILY REPRESENT THE ACTUAL TEMPERATURE RISES ACROSS THE COMPONENTS AT A SPECIFIC TIME. (REFER TO CALC. # X4C1202C17 FOR DETAILS).
7. ACCW DATA ASSUME THAT UNIT 2 ACCW IS SUPPLIED TO THE COMMON COMPONENTS AS SHOWN ON 1X4DB149-3.

THIS DOCUMENT CONTAINS PROPRIETARY, CONFIDENTIAL, AND/OR TRADE SECRET INFORMATION OF THE SUBSIDIARIES OF THE SOUTHERN COMPANY OR OF THIRD PARTIES. IT IS INTENDED FOR USE ONLY BY EMPLOYEES OF, OR AUTHORIZED CONTRACTORS OF, THE SUBSIDIARIES OF THE SOUTHERN COMPANY. UNAUTHORIZED POSSESSION, USE, DISTRIBUTION, COPYING, DISSEMINATION, OR DISCLOSURE OF ANY PORTION HEREOF IS PROHIBITED.

NO.	VERSIONS	DATE	DR	CHK	APPV
7.0	REVISED PER ABN-V02460, VER.1.0	3-15-11	BGT	DHH	AAN

SOUTHERN COMPANY SERVICES, INC.
BIRMINGHAM, ALABAMA

GEORGIA POWER COMPANY
ALVIN W. VOGTLE NUCLEAR PLANT

FLOW DIAGRAM
COOLING WATER SYSTEMS
SYSTEMS 1202, 1203, 1217

SCALE: NONE
JOB NO.10604
DRAWING NO. 2X4DB149-4
VER. 7.0

SIZE E 34X44
DWG CATEGORY: CRITICAL

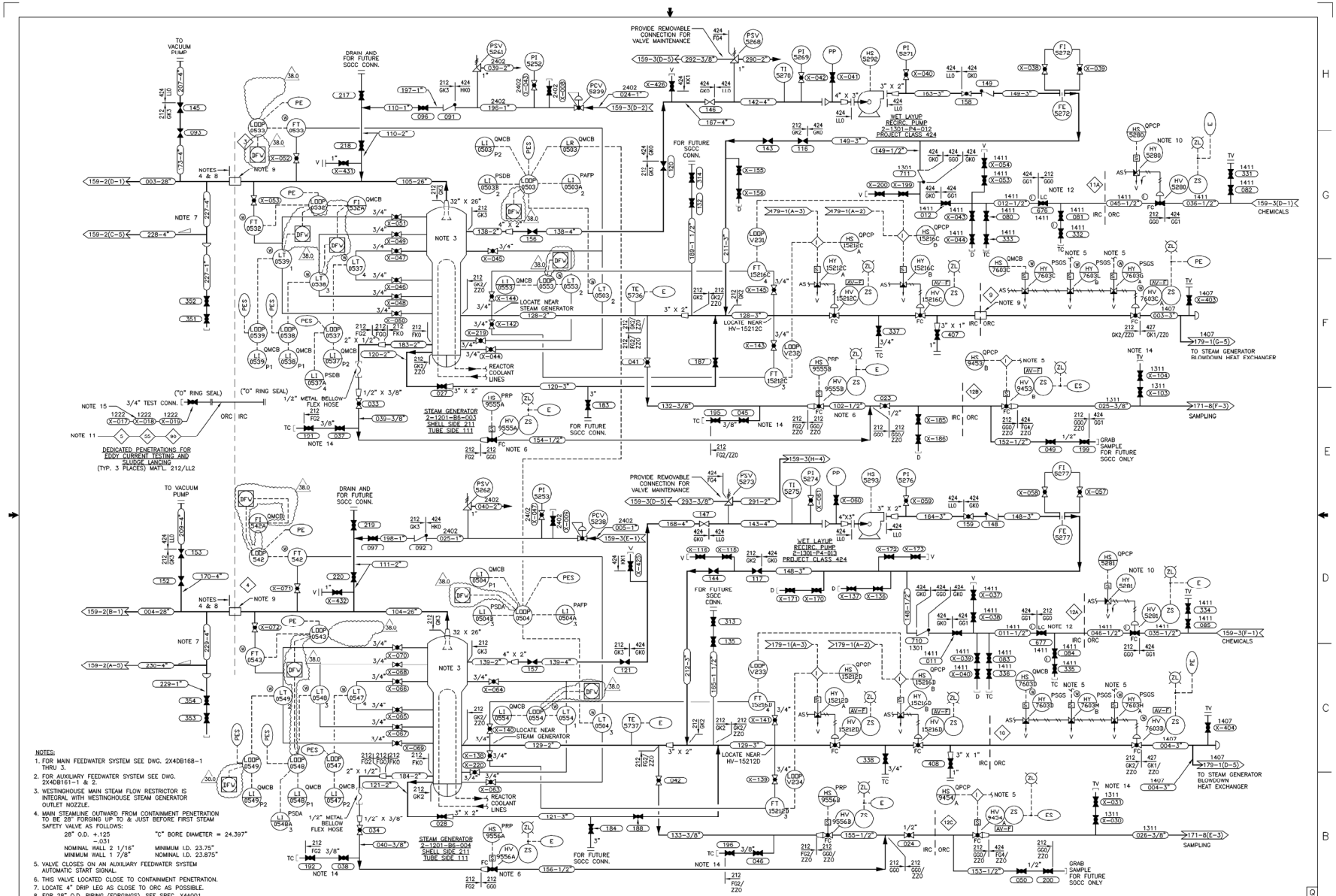

NOTES:

1. FOR MAIN FEEDWATER SYSTEM SEE DWG. 2X4DB168-1 THRU 3.
2. FOR AUXILIARY FEEDWATER SYSTEM SEE DWG. 2X4DB161-1 & 2.
3. WESTINGHOUSE MAIN STEAM FLOW RESTRICTOR IS INTEGRAL WITH WESTINGHOUSE STEAM GENERATOR OUTLET NOZZLE.
4. MAIN STEAMLINE OUTWARD FROM CONTAINMENT PENETRATION TO BE 28" FORGING UP TO & JUST BEFORE FIRST STEAM SAFETY VALVE AS FOLLOWS:
   28" O.D. +.125 −.031 — "C" BORE DIAMETER = 24.397"
   NOMINAL WALL 2 1/16" — MINIMUM I.D. 23.75"
   MINIMUM WALL 1 7/8" — NOMINAL I.D. 23.875"
5. VALVE CLOSES ON AN AUXILIARY FEEDWATER SYSTEM AUTOMATIC START SIGNAL.
6. THIS VALVE LOCATED CLOSE TO CONTAINMENT PENETRATION.
7. LOCATE 4" DRIP LEG AS CLOSE TO ORC AS POSSIBLE.
8. FOR 28" O.D. PIPING (FORGINGS), SEE SPEC. X4A001.
9. FOR PIPING FLUID HEAD FITTING OF PENETRATION ASSEMBLY, SEE SPEC. X4A010.
10. POWER TO THE SOLENOID SHALL BE REMOVED DURING ALL MODES OF OPERATION, EXCEPT DURING WET LAYUP OPERATION AND PERIODIC TESTING OF VALVES, BY MOVING THE SLIDE LINKS OF THE STATES TERMINAL BLOCKS. LOCATED IN THE TERMINAL BOX, TO THE OPEN POSITION.
11. DURING MODE 5 (COLD SHUTDOWN) OR MODE 6 (REFUELING), "OUTAGE FIXTURES" MAY BE INSTALLED ON THESE PENETRATIONS TO FACILITATE SLUDGE LANCING AND EDDY CURRENT TESTING INSIDE CONTAINMENT. SEE DRAWING 2X2D01J019 FOR DETAILS OF THE "OUTAGE FIXTURES".
12. THIS VALVE SHALL REMAIN LOCKED CLOSED DURING ALL MODES OF OPERATION, EXCEPT DURING WET LAYUP.
13. DELETED.

NOTES: (CONT)

14. THESE ARE KEROTEST VALVES AND MAY NOT ALLOW REVERSE FLOW.
15. VALVE X-018 IS A GATE VALVE.

SOUTHERN COMPANY

GEORGIA POWER COMPANY
ALVIN W. VOGTLE NUCLEAR PLANT

P & I DIAGRAM
MAIN STEAM SYSTEM
SYSTEM NO. 1301

CAD 2X4DB159-1
ACAD2007 JLO - 04

SCALE: NONE

DRAWING NO. 2X4DB159-1

VER. 38.0

JOB NO.10604

SIZE E 34X44

THIS DOCUMENT CONTAINS PROPRIETARY, CONFIDENTIAL, AND/OR TRADE SECRET INFORMATION OF THE SUBSIDIARIES OF THE SOUTHERN COMPANY OR OF THIRD PARTIES. IT IS INTENDED FOR USE ONLY BY EMPLOYEES OF, OR AUTHORIZED CONTRACTORS OF, THE SUBSIDIARIES OF THE SOUTHERN COMPANY. UNAUTHORIZED POSSESSION, USE, DISTRIBUTION, COPYING, DISSEMINATION, OR DISCLOSURE OF ANY PORTION HEREOF IS PROHIBITED.

NO.	VERSIONS	DATE	DR	CHK	APPV	DTL
38.0	REVISED PER ABN 2039002301J174, VER. 1.0	04-15-13	JLO	ELC	JMR	X

DRAWING CATEGORY: CRITICAL

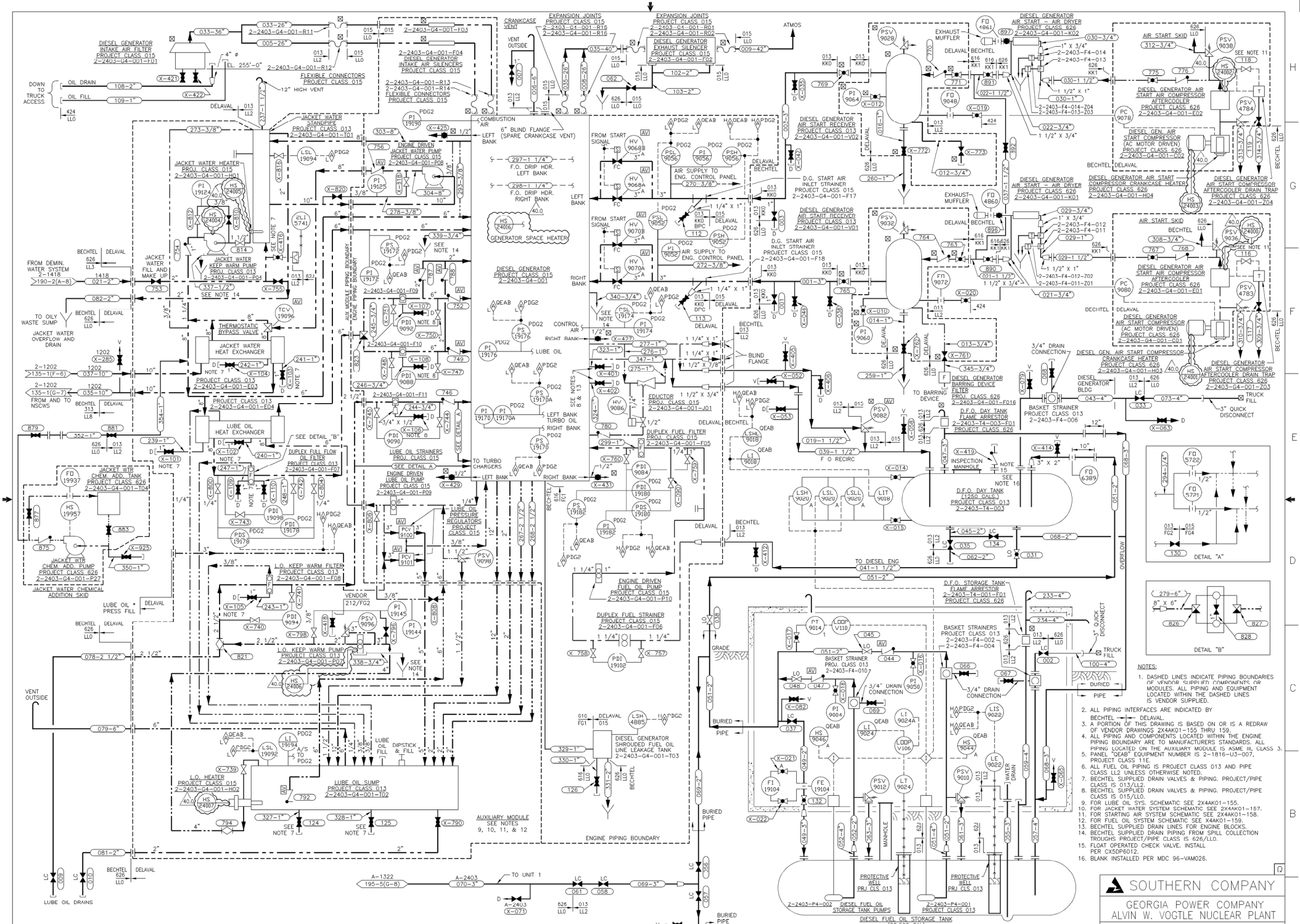

NOTES:

1. DASHED LINES INDICATE PIPING BOUNDARIES OF VENDOR SUPPLIED COMPONENTS OR MODULES. ALL PIPING AND EQUIPMENT LOCATED WITHIN THE DASHED LINES IS VENDOR SUPPLIED.
2. ALL PIPING INTERFACES ARE INDICATED BY BECHTEL — DELAVAL.
3. A PORTION OF THIS DRAWING IS BASED ON OR IS A REDRAW OF VENDOR DRAWINGS 2X4AK01-155 THRU 159.
4. ALL PIPING AND COMPONENTS LOCATED WITHIN THE ENGINE PIPING BOUNDARY ARE TO MANUFACTURERS STANDARDS. ALL PIPING LOCATED ON THE AUXILIARY MODULE IS ASME III, CLASS 3.
5. PANEL "QEAB" EQUIPMENT NUMBER IS 2-1816-U3-007, PROJECT CLASS 11E.
6. ALL FUEL OIL PIPING IS PROJECT CLASS 013 AND PIPE CLASS LL2 UNLESS OTHERWISE NOTED.
7. BECHTEL SUPPLIED DRAIN VALVES & PIPING. PROJECT/PIPE CLASS IS 013/LL2.
8. BECHTEL SUPPLIED DRAIN VALVES & PIPING. PROJECT/PIPE CLASS IS 015/LL0.
9. FOR LUBE OIL SYS. SCHEMATIC SEE 2X4AK01-155.
10. FOR JACKET WATER SYSTEM SCHEMATIC SEE 2X4AK01-157.
11. FOR STARTING AIR SYSTEM SCHEMATIC SEE 2X4AK01-158.
12. FOR FUEL OIL SYSTEM SCHEMATIC SEE X4AK01-159.
13. BECHTEL SUPPLIED DRAIN LINES FOR ENGINE BLOCKS.
14. BECHTEL SUPPLIED DRAIN PIPING FROM SPILL COLLECTION TROUGHS PROJECT/PIPE CLASS IS 626/LL0.
15. FLOAT OPERATED CHECK VALVE. INSTALL PER CX5DP6012.
16. BLANK INSTALLED PER MDC 96-VAM026.

SOUTHERN COMPANY

GEORGIA POWER COMPANY
ALVIN W. VOGTLE NUCLEAR PLANT

P & I DIAGRAM
DIESEL GENERATOR SYSTEM
TRAIN A
SYSTEM NO. 2403

CAD 2X4DB170-1
ACAD2000 JJB - 06

NO.	VERSIONS	DATE	DR	CHK	APPV	DTL
40.0	REVISED PER ABN-V03084, VER. 2.0	9-20-12	JJB	LCF	AAN	

SCALE: NONE
DRAWING NO. 2X4DB170-1
VER. 40.0
JOB NO.10604
SIZE E 34X44
DRAWING CATEGORY: CRITICAL

THIS DOCUMENT CONTAINS PROPRIETARY, CONFIDENTIAL, AND/OR TRADE SECRET INFORMATION OF THE SUBSIDIARIES OF THE SOUTHERN COMPANY OR OF THIRD PARTIES. IT IS INTENDED FOR USE ONLY BY EMPLOYEES OF, OR AUTHORIZED CONTRACTORS OF, THE SUBSIDIARIES OF THE SOUTHERN COMPANY. UNAUTHORIZED POSSESSION, USE, DISTRIBUTION, COPYING, DISSEMINATION, OR DISCLOSURE OF ANY PORTION HEREOF IS PROHIBITED.

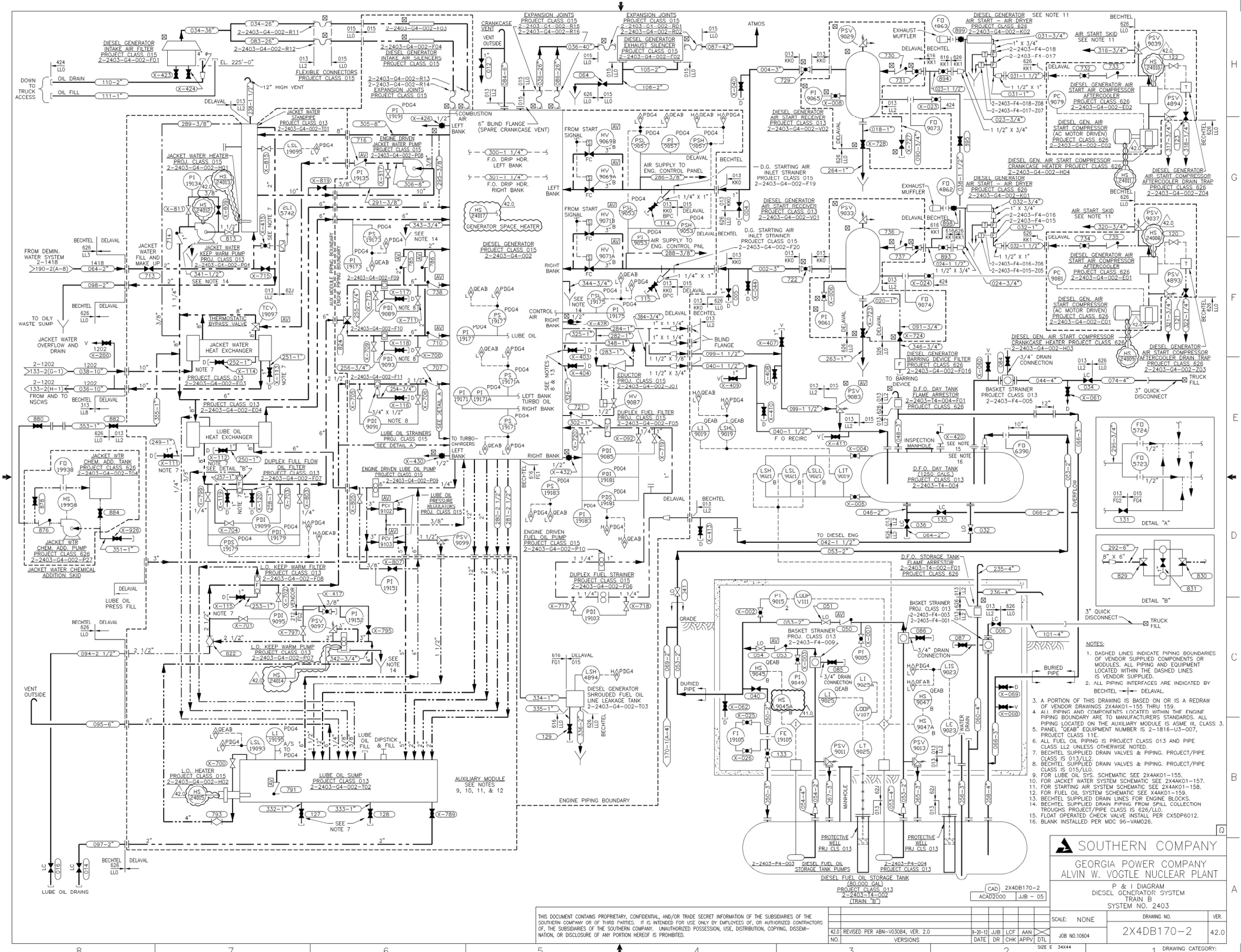
DIESEL GENERATOR INTAKE AIR FILTER PROJECT CLASS 015 2-2403-G4-002-F01
DIESEL GENERATOR INTAKE AIR SILENCERS PROJECT CLASS 015
FLEXIBLE CONNECTORS PROJECT CLASS 015
DIESEL GENERATOR EXHAUST SILENCER PROJECT CLASS 015 2-2403-G4-002-F02
EXPANSION JOINTS PROJECT CLASS 015 2-2403-G4-002-R01
EXPANSION JOINTS PROJECT CLASS 015 2-2403-G4-002-R15
DIESEL GENERATOR PROJECT CLASS 015 2-2403-G4-002
DIESEL GENERATOR AIR START RECEIVER PROJECT CLASS 013 2-2403-G4-002-V02
DIESEL GENERATOR AIR START RECEIVER PROJECT CLASS 013 2-2403-G4-002-V01
D.G. STARTING AIR INLET STRAINER PROJECT CLASS 015 2-2403-G4-002-F19
D.G. STARTING AIR INLET STRAINER PROJECT CLASS 015 2-2403-G4-002-F20
DIESEL GENERATOR AIR START - AIR DRYER PROJECT CLASS 626 2-2403-G4-002-K02
DIESEL GENERATOR AIR START - AIR DRYER PROJECT CLASS 626 2-2403-G4-002-K01
DIESEL GENERATOR AIR START AIR COMPRESSOR AFTERCOOLER PROJECT CLASS 626 2-2403-G4-002-E02
DIESEL GEN. AIR START COMPRESSOR (AC MOTOR DRIVEN) PROJECT CLASS 626 2-2403-G4-002-C02
DIESEL GEN. AIR START COMPRESSOR CRANKCASE HEATER PROJECT CLASS 626 2-2403-G4-002-H04
DIESEL GENERATOR AIR START COMPRESSOR AFTERCOOLER DRAIN TRAP PROJECT CLASS 626 2-2403-G4-002-204
DIESEL GENERATOR AIR START AIR COMPRESSOR AFTERCOOLER PROJECT CLASS 626 2-2403-G4-002-E01
DIESEL GEN. AIR START COMPRESSOR (AC MOTOR DRIVEN) PROJECT CLASS 626 2-2403-G4-002-C01
DIESEL GEN. AIR START COMPRESSOR CRANKCASE HEATER PROJECT CLASS 626 2-2403-G4-002-H03
DIESEL GENERATOR AIR START COMPRESSOR AFTERCOOLER DRAIN TRAP PROJECT CLASS 626 2-2403-G4-002-203
DIESEL GENERATOR AIR START AIR COMPRESSOR PROJECT CLASS 626 2-2403-G4-002-E03
DIESEL GENERATOR AIR START AIR COMPRESSOR PROJECT CLASS 626 2-2403-G4-002-E04
DIESEL GENERATOR PROJECT CLASS 015 2-2403-G4-002
JACKET WATER STANDPIPE PROJECT CLASS 013 2-2403-G4-002-T01
ENGINE DRIVEN JACKET WATER PUMP PROJECT CLASS 015 2-2403-G4-002-P08
JACKET WATER HEATER PROJ. CLASS 015 2-2403-G4-002-H01
JACKET WATER KEEP WARM PUMP PROJ. CLASS 013 2-2403-G4-002-P04
JACKET WATER HEAT EXCHANGER PROJECT CLASS 013 2-2403-G4-002-E03
THERMOSTATIC BYPASS VALVE
LUBE OIL HEAT EXCHANGER PROJECT CLASS 013 2-2403-G4-002-E04
DUPLEX FULL FLOW OIL FILTER PROJECT CLASS 013 2-2403-G4-002-F07
LUBE OIL STRAINERS PROJ. CLASS 015
ENGINE DRIVEN LUBE OIL PUMP PROJECT CLASS 015 2-2403-G4-002-P09
LUBE OIL PRESSURE REGULATORS PROJ. CLASS 015
L.O. KEEP WARM FILTER PROJECT CLASS 013 2-2403-G4-002-F08
L.O. KEEP WARM PUMP PROJECT CLASS 013 2-2403-G4-002-P07
L.O. HEATER PROJECT CLASS 015 2-2403-G4-002-H02
LUBE OIL SUMP PROJECT CLASS 013 2-2403-G4-002-T02
JACKET WTR CHEM. ADD. TANK PROJECT CLASS 626 2-2403-G4-002-T04
JACKET WTR CHEM. ADD. PUMP PROJECT CLASS 626 2-2403-G4-002-P27
JACKET WATER CHEMICAL ADDITION SKID
EDUCTOR PROJ. CLASS 015 2-2403-G4-002-J01
DUPLEX FUEL FILTER PROJ. CLASS 015 2-2403-G4-002-F05
ENGINE DRIVEN FUEL OIL PUMP PROJECT CLASS 015 2-2403-G4-002-P10
DUPLEX FUEL STRAINER PROJECT CLASS 015 2-2403-G4-002-F06
DIESEL GENERATOR SHROUDED FUEL OIL LINE LEAKAGE TANK 2-2403-G4-002-T03
D.F.O. DAY TANK FLAME ARRESTOR 2-2403-T4-004-F01 PROJECT CLASS 626
D.F.O. DAY TANK (1250 GALS.) PROJECT CLASS 013 2-2403-T4-004
D.F.O. STORAGE TANK FLAME ARRESTOR 2-2403-T4-002-F01 PROJECT CLASS 626
DIESEL FUEL OIL STORAGE TANK (80,000 GAL) PROJECT CLASS 013 2-2403-T4-002 (TRAIN "B")
BASKET STRAINER PROJ. CLASS 013 2-2403-F4-009
BASKET STRAINER PROJ. CLASS 013 2-2403-F4-003
BASKET STRAINER PROJ. CLASS 013 2-2403-F4-005
GENERATOR SPACE HEATER
AUXILIARY MODULE SEE NOTES 9, 10, 11, & 12
ENGINE PIPING BOUNDARY
AUX MODULE PIPING BOUNDARY ENGINE PIPING BOUNDARY
DETAIL "A"
DETAIL "B"
NOTES:
1. DASHED LINES INDICATE PIPING BOUNDARIES OF VENDOR SUPPLIED COMPONENTS OR MODULES. ALL PIPING AND EQUIPMENT LOCATED WITHIN THE DASHED LINES IS VENDOR SUPPLIED.
2. ALL PIPING INTERFACES ARE INDICATED BY BECHTEL DELAVAL.
3. A PORTION OF THIS DRAWING IS BASED ON OR IS A REDRAW OF VENDOR DRAWINGS 2X4AK01-155 THRU 159.
4. ALL PIPING AND COMPONENTS LOCATED WITHIN THE ENGINE PIPING BOUNDARY ARE TO MANUFACTURERS STANDARDS. ALL PIPING LOCATED ON THE AUXILIARY MODULE IS ASME III, CLASS 3.
5. PANEL CLASS EAB7 EQUIPMENT NUMBER IS 2-1816-U3-007, PROJECT CLASS 11E.
6. ALL FUEL OIL PIPING IS PROJECT CLASS 013 AND PIPE CLASS LL2 UNLESS OTHERWISE NOTED.
7. BECHTEL SUPPLIED DRAIN VALVES & PIPING. PROJECT/PIPE CLASS IS 013/LL2.
8. BECHTEL SUPPLIED DRAIN VALVES & PIPING. PROJECT/PIPE CLASS IS 015/LL0.
9. FOR LUBE OIL SYS. SCHEMATIC SEE 2X4AK01-155.
10. FOR JACKET WATER SYSTEM SCHEMATIC SEE 2X4AK01-157.
11. FOR STARTING AIR SYSTEM SCHEMATIC SEE 2X4AK01-158.
12. FOR FUEL OIL SYSTEM SCHEMATIC SEE X4AK01-159.
13. BECHTEL SUPPLIED DRAIN LINES FOR ENGINE BLOCKS.
14. BECHTEL SUPPLIED DRAIN PIPING FROM SPILL COLLECTION TROUGHS PROJECT/PIPE CLASS IS 626/LL0.
15. FLOAT OPERATED CHECK VALVE INSTALL PER CX5DP6012.
16. BLANK INSTALLED PER MDC 96-VAM026.
SOUTHERN COMPANY
GEORGIA POWER COMPANY
ALVIN W. VOGTLE NUCLEAR PLANT
P & I DIAGRAM
DIESEL GENERATOR SYSTEM
TRAIN B
SYSTEM NO. 2403
CAD 2X4DB170-2
ACAD2000 JJB - 05
SCALE: NONE
DRAWING NO. 2X4DB170-2
VER. 42.0
JOB NO.10604
42.0 REVISED PER ABN-V03084, VER. 2.0 9-20-12 JJB LCF AAN
NO. VERSIONS DATE DR CHK APPV DTL
SIZE E 34X44
DRAWING CATEGORY: CRITICAL
THIS DOCUMENT CONTAINS PROPRIETARY, CONFIDENTIAL, AND/OR TRADE SECRET INFORMATION OF THE SUBSIDIARIES OF THE SOUTHERN COMPANY OR OF THIRD PARTIES. IT IS INTENDED FOR USE ONLY BY EMPLOYEES OF, OR AUTHORIZED CONTRACTORS OF, THE SUBSIDIARIES OF THE SOUTHERN COMPANY. UNAUTHORIZED POSSESSION, USE, DISTRIBUTION, COPYING, DISSEMINATION, OR DISCLOSURE OF ANY PORTION HEREOF IS PROHIBITED.