Chapter 4

4.0 INSTALLATION DESIGN

This chapter provides a description of the ISFSI including the installation layout, major components, handling equipment, and auxiliary systems. It also provides a summary of the analysis performed to demonstrate compliance with design requirements presented in Chapter 3. Installation design, analysis, and fabrication are covered by the BFS Quality Assurance Program, *the Holtec International Quality Assurance Program,* and the PGE Nuclear Quality Assurance Program as addressed in Chapter 11.

4.1 SUMMARY DESCRIPTION

4.1.1 LOCATION AND LAYOUT OF INSTALLATION

The location of the ISFSI site is in Columbia County in Northwest Oregon by the Columbia River and is shown in Figure 2.1-1. Figures 1.1-2 and 2.1-2 show the location of nearby structures, roadways, railways, and rivers. The ISFSI layout is shown in Figure 2.1-3.

4.1.2 PRINCIPAL FEATURES

4.1.2.1 Site Boundary

The PGE owned property area is shown in Figure 2.1-2. The ISFSI site boundary is defined by the ISFSI controlled access area fence shown in Figure 2.1-3.

4.1.2.2 Controlled Area

The ~~c~~Controlled ~~a~~Area established by the criterion in 10 CFR 72.106 is shown in Figure 2.1-2.

4.1.2.3 Site Utility Supplies and Systems

The ISFSI design relies on the natural circulation of air to provide cooling of the spent nuclear fuel. Heat generated by the spent nuclear fuel is transferred to the air located in the Concrete Cask annulus. This heated air rises and exits via air outlets (4) located near the top of the Concrete Cask. Ambient air enters via air inlets (4) located at the bottom of the Concrete Cask. This passive design eliminates the need for utilities to support storage conditions. Electrical power is provided for security requirements which are addressed in the ISFSI Physical Security Plan. Electrical power is also available to support instrumentation such as temperature monitoring. Water and sewage utilities are not required or provided for the ISFSI.

4.1.2.4 Storage Facilities

Section 2.2 discusses the location of nearby storage facilities. Figures 2.2-1 and 2.2-2 show the location of these facilities.

4.1.2.5 Stacks

There are no stacks required for the operation of the ISFSI.

4.2 STORAGE STRUCTURES

This section provides a description of the ISFSI installation and major components, selected design criteria, materials of construction, fabrication summary, and quality assurance activities. Thermal~~,~~ and criticality evaluations under normal and off-normal storage conditions are summarized. The shielding analysis is presented in Chapter 7, and the accident analysis is presented in Chapter 8. ISFSI handling structures and components are addressed in Section 4.7.

4.2.1 STRUCTURAL SPECIFICATION

The design criteria of the storage structures and components account for both normal and off-normal conditions, including a range of credible and postulated accidents. The principal design criteria for the ISFSI ~~is~~ *are* in accordance with Title 10, Code of Federal Regulations, Part 72 (10 CFR 72), and ANSI/ANS 57.9. The design criteria for the ISFSI ~~is~~ *are* presented in Chapter 3. The design codes for the major ISFSI storage structures and components are summarized in the following table.

Component	Governing *Design* Code/Standard[1]
Storage, Service, and Transfer *Station* Pads	ACI 318 (1983)
~~PWR Basket~~*MPC*	Confinement boundary - ASME, Section III, Subsection ~~NG~~*NB* ~~Internal assembly~~*Fuel Basket* - ASME, Section III, Subsection NG
~~Basket Overpack~~	~~ASME, Section III, Subsection NG~~
Fuel Debris Process Can Capsule	ASME, Section III, Subsection NG (used as guidance - see Section 3.2.5.5)
Failed Fuel Can	ASME, Section III, Subsection NG
Concrete Cask	ACI 349 and ANSI 57.9

[1] *Applicable revision of governing design code/standard is provided in Chapter 3.*

Section 3.4 provides the criteria used to classify structures, systems and components, important to safety.

~~[1] Applicable revision of governing code/standard is provided in Chapter 3.~~

The ISFSI Storage and Service Pads and Transfer Station Pad meet the requirements of ACI 318 and are capable of supporting the loads associated with the array of Concrete Casks and transfer equipment. The ISFSI Storage and Service Pads are ~~not~~ classified as *not* important to safety. The concrete pads provide a supporting surface for the Concrete Casks and ~~Shipping~~ *the HI-STAR 100 Transport* Cask. They also provide a smooth level surface to allow operation of the air pad system. The Transfer Station Pad is important to safety and is designed to support the Transfer Station under all normal and accident loads.

The Storage Pad with its engineered fill is designed to preclude unacceptable damage to the Concrete Cask under a hypothetical tipover accident. The Storage Pad is also designed as a beam system on elastic foundation for bounding case loading combinations per ACI-318, including consideration of seismic components associated with a Seismic Margin Earthquake (SME).

The remaining structures listed above are considered important to safety. Structural evaluations presented in Section 4.2.5 demonstrate compliance with the above codes and standards. The ~~PWR Basket and Basket Overpack~~*MPC* ~~are~~ *is* fabricated and inspected to the requirements summarized in Table 4.2-1. *Deviations from the ASME Code for the design of the MPC are listed in Table 4.2-1a.* The Concrete Cask is fabricated and constructed to the requirements summarized in Section 4.2.4.2.4 and Table 4.2-2. *Deviations from the ACI Code for the design of the Concrete Cask are listed in Table 4.2-2a.*

4.2.2 INSTALLATION LAYOUT

4.2.2.1 Building Plans and Sections

The Trojan ISFSI is an open-air facility. The installation layout is presented in Figure 2.1-3. The higher dose rate Concrete Casks are generally located toward the northeast section of the Storage Pad in order to minimize dose rates at the normally occupied areas to the west and south of the Storage Pad. As described in Section 2.2.1, large earthen berms located along the north and east sides of the ISFSI provide additional shielding in these directions. In addition, personnel occupancy of the areas to the northeast of the ISFSI is very low. Chapter 7 discusses anticipated exposures associated with ISFSI operations.

The Storage and Service Pads are designed and constructed in accordance with ACI-318 (1983). The Storage and Service Pads consist of a reinforced concrete pad *surface* approximately 170 feet long by 105 feet wide. The concrete pads are constructed on approximately 24~~"~~ *inches* of engineered fill on competent rock and have an approximate thickness of 18 inches.

4.2.3 CONFINEMENT FEATURES

The ~~PWR Basket~~*MPC* provides the primary confinement boundary for spent nuclear fuel ~~waste~~. ~~In the unlikely event of a PWR Basket confinement boundary failure, the affected PWR Basket~~

~~may either be repaired or sealed within a Basket Overpack.~~ Section 3.3.2 *provides a definition of the confinement boundary and* discusses the design criteria applicable to these ISFSI components.

The cladding of intact fuel assemblies provides an additional confinement boundary. The Failed Fuel Cans provide an enclosure for ~~failed~~ *damaged* fuel assemblies, fuel debris Process Can Capsules, non-fuel bearing components, and fuel debris in Process Cans to constrain these assemblies and components within their ~~PWR Basket~~*MPC* storage location*s*. Constraining this material to fixed storage locations is required to maintain the assumptions in the criticality analysis and heat transfer modeling.

The design requirements for confinement barriers and systems are further discussed in Section 3.3.2.

4.2.4 INDIVIDUAL UNIT DESCRIPTION

The ISFSI is ~~comprised of~~*sized to accommodate* up to 36 individual storage systems. *The ISFSI is licensed for 34 storage systems based on the amount of fuel and fuel-related material to be stored.* Each storage system consists of a Concrete Cask containing a*n* ~~PWR Basket~~*MPC*. ~~In the unlikely event a PWR Basket fails to maintain a confinement boundary and cannot be repaired, a Basket Overpack is available for continued storage inside a Concrete Cask.~~ The Concrete Casks are arranged on the Storage Pad as discussed in Section 4.2.2.1.

4.2.4.1 Functional Description

The primary functions of the ISFSI storage system components are discussed in Section 3.3.1.

4.2.4.2 Component Descriptions

4.2.4.2.1 Description of the ~~PWR Basket~~*MPC*

The ~~PWR Basket~~*MPC* is a transportable cylindrical container consisting of ~~an outer shell assembly, a shield lid, a structural lid, and an internal PWR Basket assembly~~*a honeycomb fuel basket, baseplate, MPC shell, MPC lid, vent and drain port cover plates, and a closure ring.* The ~~PWR Basket~~*MPC* ~~shell~~ provides the confinement boundary and is designed to withstand credible accidents without loss of integrity.

~~The exterior bottom plate and shell are coated with a radiation resistant, high temperature, gloss epoxy coating:~~

~~1. to ease decontamination following loading operation, and~~

~~2. to promote radiant heat dissipation (in support of the thermal analysis presented in Section 4.2.6) during the conditions listed in Table 4.2-12.~~

The ~~PWR Basket internal assembly~~*MPC fuel basket* is fabricated from *stainless* steel plates formed into an array of 24 square storage cells *with surrounding flux traps*. Four (4) of the outer corner cells are slightly larger to ~~allow accommodation~~*accommodate storage* of a Failed Fuel Can. Intact fuel assemblies, with or without inserts, may be stored in any of the storage locations. The ~~internal assembly~~*MPC fuel basket* uses ~~structural tubes~~*full-length welds at the intersections of cell walls* to provide support for the storage cells during a postulated drop accident. Neutron absorbing poison sheets *(Boral)* are also used in the construction of the ~~PWR Basket internal assembly~~*MPC fuel basket. The MPC cavity length is based on the maximum height fuel assemblies (i.e., those assemblies containing RCCAs). For those assemblies without RCCAs, the MPC design includes a stainless steel spacer to maintain the proper axial position of the fuel assemblies within the MPC fuel basket.*~~, however, they are not credited in the criticality analysis for dry storage conditions. The PWR Baskets internal carbon steel components are coated with an inorganic, radiation resistant, high temperature, coating:~~

~~1. to provide corrosion protection during immersion in fuel pool water, and~~

~~2. to promote radiant heat dissipation (in support of the thermal analysis presented in Section 4.2.6) during the conditions listed in Table 4.2-12.~~

Section 5.1.1 discusses the operations associated with ~~PWR Basket~~*MPC* loading and installation of the ~~shield lid and structural~~*MPC* lid, *vent and drain port cover plates, and MPC closure ring.* The *stainless* steel ~~shield~~ *MPC* lid contains two penetrations to allow for ~~vacuum drying~~*dewatering, moisture removal,* and helium backfilling of the ~~PWR Basket internal atmosphere~~*MPC cavity (see Figure 4.2-1a).* Prior to lowering the ~~shield~~ *MPC* lid onto the ~~PWR Basket~~ *MPC* after loading is complete, a pipe is threaded into ~~one of~~ the ~~two~~ *underside of the drain port* penetration~~s~~. When the ~~shield~~ *MPC* lid is in place, the pipe length is such that it extends to the bottom of the ~~PWR Basket~~*MPC* to facilitate ~~water removal~~*MPC preparation operations. After removal from the Cask Loading Pit and decontamination, the MPC is prepared for lid-to-shell welding. The MPC lid is welded to the MPC shell using multiple passes. After welding is complete, the vent and drain ports are fitted with Remote Valve Operating Assemblies (RVOAs) to open and close the vent and drain ports during hydrotesting, helium leak testing, draining, moisture removal, and helium backfill operations. After hydrotesting and helium leak testing, the water is drained from the MPC.* Upon completion of water removal, *the ancillary equipment necessary to remove the remaining moisture (either by vacuum drying or helium recirculation) is connected and the MPC cavity is dried*~~a pipe plug is threaded into the drain pipe penetration. The other penetration utilizes a quick disconnect fitting or ball valve to allow connection to a vacuum drying and helium backfilling system. The shield lid is seal welded to the PWR Basket shell.~~

~~A steel structural lid containing a penetration allowing access to the shield lid penetrations is placed on top of the shield lid and seal welded to the PWR Basket shell and to the shield lid (where exposed by the structural lid penetration).~~

~~Upon completion of the vacuum drying and helium inerting of the internal PWR Basket atmosphere, the shield lid and structural lid penetrations must be sealed. The quick disconnect fitting or valve is relied upon to maintain the helium atmosphere until the penetration closure plates are installed. The shield lid penetrations are isolated by two steel penetration closure plates inserted into the structural lid access penetration. The steel plates are inserted individually and seal welded to the sides of the structural lid penetration.~~

After helium backfilling is complete, the RVOAs are used to isolate the MPC cavity from the ambient environment and are removed. The vent and drain port penetrations are sealed with vent and drain port cover plates that are welded to the MPC lid. Each port cover plate includes two threaded holes to allow helium leak testing of the cover plate welds. These holes are sealed with screws and plug welds.

Finally, a stainless steel MPC closure ring is welded to the MPC shell on its outer diameter and the MPC lid on its inner diameter, providing redundant weld closure for both the MPC lid-to-shell weld and the vent and drain port cover plates.

The ~~penetration closure~~*MPC vent and drain port cover* plate~~s~~ welds, which form part of the confinement barrier, are not hydrostatically tested *because the vent and drain ports are in service during the hydrotest of the MPC lid-to-shell weld.* This is considered acceptable based on the specified methods of construction and intended application. The bases for this conclusion are summarized as follows:

1. The welds in question *are 3/16 inch thick and are dye penetrant inspected in accordance with ASME Section V, with acceptance criteria in accordance with ASME Section III, NB-5350, to provide assurance that the weldment is free of unacceptable imperfections*~~employ a double weld design providing redundant barriers,~~

2. *The vent and drain port cover plates will likely not be subject to MPC internal pressure because the vent and drain port caps in the penetrations below provide an intermediate barrier to pressure.*~~The calculated internal PWR Basket pressure during normal service is approximately atmospheric resulting in negligible pressure stresses,~~

3. *The welded MPC closure ring provides a redundant welded closure for the vent and drain port cover plates. The closure ring welds are also dye penetrant inspected in accordance with ASME Section V, with acceptance criteria in accordance with ASME Section III, NB-5350, to provide* ~~The welds in question~~

~~are dye penetrant tested thereby providing~~ assurance that the weldment is free of unacceptable imperfections, and

4. Neither operating nor environmental conditions are expected to subject the welds to cyclic loading.

The ~~PWR Baskets~~*MPCs* are designed, fabricated, *inspected,* and tested to provide a confinement barrier for spent nuclear fuel in accordance with the general design criteria requirements of 10 CFR 72 Subpart F. Although the ~~PWR Baskets~~*MPCs* will not be N-stamped in accordance with ASME Section III, ~~NC-8100 (1992)~~*NB-8100 (1995)*, ~~PWR Basket~~*MPC construction is in accordance with Subsection NB with certain approved deviations (see Table 4.2-1a).* ~~design, fabrication and testing controls must be approved by the NRC prior to commencing ISFSI operations.~~ Design, fabrication, *inspection,* and testing of ~~PWR Baskets~~*MPCs* will be performed in accordance with a Quality Assurance Program meeting the applicable requirements of 10 CFR 72 Subpart G as presented in Chapter 11.

Table 4.2-1 presents a summary of fabrication requirements. Figure*s* 4.2-1*a and 4.2-1b* provide~~s~~ a *pictorial* description of the ~~PWR Basket~~*MPC*.

4.2.4.2.2 ~~Description of the GTCC Basket~~

This section ~~has been~~ deleted.

4.2.4.2.3 ~~Description of the Basket Overpack~~*This section deleted.*

~~In the unlikely event of a leak in the confinement boundary of a PWR Basket that cannot be repaired, a Basket Overpack would be used for continued storage inside a Concrete Cask.~~

~~The Basket Overpack is a cylindrical shell with sufficient inside diameter to accommodate a PWR Basket. The Basket Overpack is designed to the same code requirements as the PWR confinement boundary.~~

~~The interior and exterior of the Basket Overpack shell are coated with a radiation resistant, high temperature coating to promote radiant heat dissipation (in support of the thermal analysis presented in Section 4.2.6) during the conditions listed in Table 4.2-12.~~

~~The confinement boundary is not hydrostatically tested. This is considered acceptable based on the specified methods of construction and intended application. The bases for this conclusion are summarized as follows:~~

~~1. The calculated internal PWR Basket pressure during normal service is approximately atmospheric resulting in negligible pressure stresses,~~

~~2. The welds in question are dye penetrant tested thereby providing assurance that the weldment is free of unacceptable imperfections,~~

~~3. Neither operating nor environmental conditions are expected to subject the welds to cyclic loading,~~

~~4. The internal atmosphere of the Basket Overpack is pressurized with helium and the structural lid weld is checked with a helium leak detector, and~~

~~5. The Basket Overpack design includes a redundant leakage barrier for the closure weld joint.~~

~~The Basket Overpack is designed, fabricated, and tested to provide a confinement barrier for spent nuclear fuel in accordance with the general design criteria requirements of 10 CFR 72 Subpart F. Although the Basket Overpack will not be N-stamped in accordance with ASME Section III, NC-8100, PWR Basket design, fabrication and testing controls must be approved by the NRC prior to commencing ISFSI operations. Design, fabrication, and testing of Basket Overpacks will be performed in accordance with a Quality Assurance Program meeting the applicable requirements of 10 CFR 72 Subpart G as presented in Chapter 11. The Basket Overpack is never lifted while loaded with a PWR Basket, therefore, lifting loads are not included in the design.~~

~~The description of operations involving the Basket Overpack is presented in Chapter 5. The fabrication summary is the same as for the PWR Basket as presented in Table 4.2-1. Figure 4.2-3 provides a description of the Basket Overpack.~~

4.2.4.2.4 Description of the Concrete Cask

The Concrete Cask is a reinforced concrete cylinder designed to the requirements of ACI-349 and constructed to ACI-318. The concrete is Type II Portland Cement, 145 pcf, 4000 psi concrete. Outer and inner re-bar cages are formed by vertical hook bars and horizontal ring bars. The internal cavity of the Concrete Cask is formed by a coated steel liner and bottom plate. The steel and concrete walls of the Concrete Cask are designed to minimize side surface radiation dose rates. The steel liner is coated to promote radiant heat dissipation and to minimize corrosion.

The thermal evaluations discussed in Section 4.2.6 demonstrate that the concrete temperature limits provided in ACI-349 may be exceeded under credible environmental conditions for the ISFSI site. ACI-349 Section A.4 establishes a normal operating temperature limit of 150°F except for local areas which may not exceed 200°F. Short term or accident temperature limits shall not exceed 350°F. Higher temperatures than those specified above may be allowed if tests are provided to evaluate the reduction in strength and this reduction is applied to design allowables. An alternative approach (other than testing) is to specify material properties for the

concrete ingredients. PGE has opted for this method and thereby provided assurance that there is no reduction in strength as a result of exposure to high temperatures. As shown in Table 4.2-2, Type II cement is used, fine and coarse aggregates meet the criteria of ASTM C33 and other aggregate requirements as referenced in ACI-349, and both fine and coarse aggregates are restricted in composition to limestone, dolomite, marble, basalt, granite, gabbro, or rhyolite.

The concrete mix used to fabricate the Concrete Casks is intended to allow satisfactory long term concrete temperatures as high as 300°F. Studies have shown that there is no reduction in strength for bulk concrete temperatures up to 500°F (Reference 11). A conservative limit of 225°F is used for local areas under normal conditions and 300°F for off-normal and infrequent events. Both limits are well under the upper range temperature limit identified in Reference 11 and provide an acceptable margin of safety. The short-term accident temperature limit is 350°F in accordance with ACI-349 requirements.

An air flow path is formed by the openings at the bottom (air entrance), the air inlet ducts, the gap between the ~~PWR Basket~~*MPC* exterior and the Concrete Cask interior, and the air outlet ducts at the top. The air inlet and outlet vents are steel-lined penetrations that take non-planar paths to minimize radiation streaming. A shield ring is provided over the ~~PWR Basket~~*MPC*-liner annulus to reduce the dose rate at the top of the Concrete Cask.

The Concrete Cask lid is fabricated from a steel plate which provides additional shielding to reduce the skyshine radiation. The Concrete Cask lid also provides a cover and seal to protect the ~~PWR Basket~~*MPC* from the environment and postulated tornado missiles. The lid is bolted in place and is provided with a locking wire with a lead seal.

The bottom of the Concrete Cask is covered with a steel plate which minimizes loss of cask concrete during a bottom drop accident. The Concrete Cask has reinforced chamfered corners at the top and bottom to minimize damage during handling.

The Concrete Cask is constructed by pouring concrete between a re-usable form and the inner metal liner. The reinforcing bars and air flow embedments are installed and tied prior to pouring.

A summary of fabrication requirements is presented in Table 4.2-2. *Deviations from the ACI Code for the design of the Concrete Cask are listed in Table 4.2-2a.* Figure 4.2-4 provides a description of the Concrete Cask.

4.2.4.2.5 Failed Fuel Can

The Failed Fuel Can is designed to contain partial or complete fuel assemblies with ~~failed~~ *damaged* or suspect rods. The internal square opening accommodates a fuel assembly without inserts. The Failed Fuel Can will also be used to store a fuel rod storage container, fuel debris Process Can Capsules, fuel assembly ~~hardware~~ *metal fragments* (~~non-fuel bearing components~~*e.g., portions of fuel rods, grid assemblies, bottom nozzles, etc.*), and fuel debris

Process Cans that contain fuel debris and fuel assembly ~~hardware~~ *metal fragments*~~(non-fuel bearing components)~~. The outside dimensions allow the Failed Fuel Can to fit in one of the four oversized storage locations within a*n* ~~PWR Basket~~*MPC*.

The shell of the Failed Fuel Can is fabricated from stainless steel. On the bottom of the shell assembly are four screened vent holes. These vent holes enable ~~vacuum drying of~~*moisture removal from* the canister. The vent holes also expose the contents of the Failed Fuel Can to the helium atmosphere of the ~~PWR Basket~~*MPC*.

The lid is bolted in place and is designed to be lifted using a fuel handling tool. The lid bottom also has vent holes to facilitate draining.

~~The stainless steel Failed Fuel Can is not coated.~~*The final Failed Fuel Can to be loaded is not anticipated to be completely full. This Failed Fuel Can will be loaded with one or more Process Can(s) containing any remaining loose fuel pellets, fuel assembly bottom nozzles, and other fuel-related debris. A stainless steel spacer will then be placed in the Failed Fuel Can to fill the remaining space above the stored material.*

Figure 4.2-5 provides a description of the Failed Fuel Can.

4.2.4.2.6 Description of Fuel Debris Process Can and Capsule

The Process Can, shown in Figure 4.2-6a, is the container used to process the organic media and fuel debris located in the Spent Fuel Pool. The Process Can is constructed of 300 series stainless steel for corrosion resistance. The Process Can has 5 micron metallic filters in both the can bottom and lid. These filters allow removal of water and organic media by high temperature steam, while retaining the solid residue from the processed media and fuel debris inside the Process Can.

After high temperature steam processing, up to five (5) Process Cans are placed inside the Process Can Capsule shown in Figure 4.2-6b. The Process Can Capsule is constructed of 304 stainless steel for corrosion resistance and is inerted with helium. The Process Can Capsule provides a sealed containment for the fuel debris. The Process Can Capsule is designed to be lifted by normal fuel handling tools.

The Process Cans may also be used to store fuel assembly hardware (non-fuel bearing components) and loose fuel pellets or fragments. These Process Cans will not be placed in a Process Can Capsule, but will be directly placed inside a Failed Fuel Can. These Process Cans will not be processed by high temperature steam because there will be no organic media to remove. Water will be removed from the Process Can through the metallic filters during the ~~PWR Basket vacuum drying~~*MPC moisture removal* process.

4.2.4.2.7 ~~GTCC Can~~

This section ~~has been~~ deleted.

4.2.4.2.8 Component Coatings

~~As indicated in Sections 4.2.4.2.1 and 4.2.4.2.3, the PWR Basket internals and Basket Overpack are coated to promote radiant heat transfer, prevent corrosion, and aid in surface decontamination. Because these components may be exposed to high radiation, high temperature, and corrosive chemicals (during fuel loading operations), the coatings on these components have been qualified by testing for these specific applications. The qualification test and acceptance criteria for these coatings are given in Table 4.2-15.~~*No component in the MPC is coated. The Transfer Cask is coated with an epoxy-based material suitable for borated water service. The coating prevents corrosion and aids in surface decontamination. Sealing surfaces, threaded holes, plugs, and seals are not coated since the coating could affect their ability to perform their design functions. See Section 4.8 for additional discussion of materials used in the Trojan Storage System.*

4.2.4.3 Design Bases and Safety Assurance

The design codes for the individual storage structures and components are provided in Section 4.2.1. The storage structures and components are designed for safe long-term storage of spent nuclear fuel. They are designed to survive normal, off-normal, and postulated accident conditions without ~~an unacceptable~~ release of radioactive material or excessive radiation exposure to workers or members of the general public. Storage systems and components are designed and fabricated in accordance with recognized codes and standards that provide ample safety margin.

Design features that have been incorporated in the ISFSI to provide safe long-term fuel storage include:

1. Leak-tight welds on each ~~PWR Basket structural lid, shield~~*MPC shell, baseplate,* lid, ~~shell, and bottom plate~~*vent and drain port cover plates, and closure ring,*

2. Thick *MPC* lid~~s and walls~~ to minimize radiation exposure to *the* public and site personnel,

3. Design of ~~PWR Basket~~*MPC* body and internals to withstand a postulated drop accident during storage or transportation, and

4. Design of Concrete Cask *to provide radiation shielding of the public and operations personnel, and* to protect *the* ~~PWR Baskets~~*MPCs* from postulated environmental events.

Methods used to minimize personnel radiation exposure during ISFSI operations are discussed in Chapter 5 and Chapter 7.

Design features to maintain subcritical conditions for normal operations and credible accident scenarios are discussed in Section 4.2.7.

10 CFR 72.126(a)(3) requires access to areas of potential contamination or high radiation within an ISFSI to be controlled. During normal storage conditions, if high radiation areas are identified, they will be controlled in accordance with ISFSI Technical Specification 5.6.1. Increased radiation levels are possible during component handling evolutions. Although not anticipated, any contamination associated with ISFSI operations should be limited to the Storage Pad. The Storage Pad is located in the protected area which is surrounded by a security fence. Access to this area is controlled by security and is discussed in Section 3.3.5.1. The Radiation Protection Program is discussed in Chapter 7.

The ISFSI is designed to provide safe storage of spent nuclear fuel for 40 years in accordance with the requirements of Oregon Administrative Rule (OAR) 345-26-390(4)(j). In the unlikely event that a permanent off-site disposal or storage facility is not available within 40 years, PGE could pursue one of three options. These include: 1) seek relicensing of the present ISFSI based on additional analysis to extend the design life; 2) construct and license a new ISFSI; or 3) transfer the spent nuclear fuel to an off-site temporary storage facility, if available.

Major design requirements are summarized in Table 4.2-3.

4.2.5 STRUCTURAL EVALUATION

This section describes the design and analyses of the principal structural components of the storage system and components under normal operating conditions. *The* ~~PWR Basket~~*MPC* weight calculation was performed assuming *an* ~~PWR Basket~~*MPC* containing 24 intact fuel assemblies, each containing *an* RCCA. This weight configuration is considered to conservatively bound actual loading configurations. This section describes the methodology and analysis techniques used, and presents the results.

The storage system structural design criteria are specified in Chapter 3. The combinations of normal, off-normal, and accident loadings have been evaluated per ANSI 57.9 for the Concrete Cask and per the ASME Boiler and Pressure Vessel Code, Section III, Division I, Subsection ~~NC for Class 2 components~~ *NB* for the ~~PWR Basket~~*MPC* confinement boundary.

The following components, utilized for normal spent fuel storage operations, are addressed in this section:

1. ~~PWR Basket~~*MPC* confinement boundary (shell, *baseplate,* ~~structural~~ lid, *vent and drain port cover plates, closure ring, and associated welds*);

2. ~~PWR Basket internal assembly cells and structural tubes~~*MPC fuel basket*;

~~3. PWR Basket shield lid support ring weld;~~

~~4~~*3*. Concrete Cask concrete body; and

~~5~~*4*. Concrete Cask steel components (reinforcement, liner, cover lid).

In addition, the handling devices analysis is presented in Section 4.7.

The following sections discuss individual loads and load combinations. The structural evaluations demonstrate that components meet their structural design criteria and are capable of safely storing spent nuclear fuel.

4.2.5.1 Weights and Centers of Gravity

Nominal component weights and centers of gravity for the storage system are summarized in Table 4.2-4 and Figure 4.2-8.

4.2.5.2 Mechanical Properties of Materials

The mechanical properties of steels and concrete used in the structural evaluation of the storage system are consistent with the mechanical properties presented in Tables 4.2-5 and 4.2-6.

4.2.5.3 ~~PWR Basket~~*MPC Stress* Analysis Under Normal Loads

4.2.5.3.1 ~~PWR Basket~~*MPC* Thermal Stress Analysis

The storage system was evaluated for thermal stresses by using separate and distinct models for the ~~PWR Basket~~*MPC* and Concrete Cask. This approach is valid since these components are not structurally coupled. The ~~PWR Basket~~*MPC* is free to thermally expand or contract relative to the Concrete Cask. In addition, the ~~sleeves are~~*fuel basket is* not connected to the ~~PWR Basket~~*MPC* ~~shell~~ *enclosure vessel* so that these components can also be evaluated separately.

For the overall evaluation of the thermal stresses, the temperature distribution for the -40°F ambient condition was used because it causes the highest thermal gradients in the ~~PWR Basket~~*MPC* structure. The temperature distribution was obtained from the thermal analysis described in Section 4.2.6.

The ~~PWR Basket~~*MPC* internal structure is designed to minimize restrictions of thermal expansion. Existing gaps allow independent expansion of the ~~internal assembly cells, structural tubes.~~*fuel basket honeycomb* and the shell. As a result, thermal stresses in the ~~PWR Basket~~*MPC fuel basket* remain low. The thermal stresses *for the Trojan Storage System* are calculated ~~using~~ *by scaling* the *thermal stress analysis* results presented *in the HI-STAR 100 FSAR (Reference 17)* for the *generic* ~~PWR Basket~~*MPC fuel basket* during transport ~~(Reference 1)~~. ~~which were~~ *These analysis results are* based on the detailed finite element modeling of the structure. ~~The stresses during storage were found by scaling of the transportation stresses.~~ The results are summarized in Table 4.2-7.

4.2.5.3.2 ~~PWR Basket~~*MPC* Dead Weight Load Analyses

The dead weight loads are *bounded by the handling loads on the MPC under normal conditions (Level A Service Conditions). The normal handling load on the MPC is assumed to be equal to a 2g* ~~calculated by a ratio of the vertical drop stresses with respective accelerations. The~~ acceleration, ~~for~~ *whereas the* dead weight *load corresponds to a* ~~is~~ 1-g *acceleration.* ~~Dead weight stresses are presented in Table 4.2-8.~~ *The MPC handling analysis is further discussed in Section 4.2.5.3.4.*

4.2.5.3.3 ~~PWR Basket~~*MPC* Pressure Analysis

The stresses in the MPC enclosure vessel due to pressure must satisfy the appropriate stress limits from ASME, Section III, Subsection NB. The design basis MPC internal and external pressures under normal operating conditions are 100 psig and 40 psig, respectively. The worst case minimum operating pressure in the ~~PWR Basket~~*MPC* ~~would~~ exists when a*n* ~~PWR Basket~~*MPC* originally loaded with ~~26~~ *17.4* kWt cools down to 0 kWt and the ambient temperature drops to -40°F. This pressure is calculated to be ~~7.9~~*21.7* psig. ~~Section 8.2.6 discusses the accident pressurization analysis.~~ Table 4.2-9 presents the results of additional cases analyzed ~~considered at~~*under* normal conditions with no rod failures and various ambient conditions. ~~The same approach as the PWR Basket thermal stress analysis was used, i.e., the stresses were ratioed from the transportation condition. The results are evaluated in combination with other loadings in Table 4.2-8. The allowable external pressure has been calculated per ASME Section III, NC-3133.3. The resulting allowable pressure is much higher than the calculated maximum; therefore, PWR Basket buckling will not occur.~~

The stress results due to the design basis MPC internal pressure, as well as the results for the combined pressure plus handling loads, are evaluated in Table 4.2-8. The accident pressurization analysis is discussed in Section 8.2.6. Additional calculations have been performed in support of the generic Holtec MPC design to demonstrate that the MPC will not buckle due to design or accident external pressure (Reference 17, Appendix 3.H).

4.2.5.3.4 ~~PWR Basket~~*MPC* Handling Analysis

The ~~PWR Basket~~*MPC* normal handling load has been defined as ~~± 0.5g~~*2g* applied in ~~all~~ *the horizontal or vertical* direction~~s simultaneously~~ *(Reference 17, Section 3.4.4.3.1.1).* ~~This produces the sum of (0.5g)√2 = 0.71g in the horizontal direction and 0.5g in the vertical direction.~~ The stresses *in the MPC due to lateral handling loads* are calculated ~~by the appropriate scaling of stresses due to a drop accident~~*using finite element analysis*. The analysis is presented in Section 8.2, and *the results are* added to the stresses due to the other design loadings in Table 4.2-8. *Specifically, the stresses due to the handling load are combined with stresses due to the design basis internal pressure. The combined results are listed in Table 4.2-8 under the column heading "Normal Handling."*

4.2.5.3.5 ~~PWR Basket~~*MPC* Load Combination

The ~~PWR Basket~~*MPC* design loadings are based on dead weight, thermal, internal pressure (not applicable to ~~PWR Basket~~*MPC fuel basket* internals), and handling loads. The stresses due to the loadings are presented and evaluated in Table 4.2-8. *The first column of results, which is labeled as "Design Internal Pressure," reports the maximum stresses in the MPC enclosure vessel due solely to design internal pressure. The next column ("Normal Handling") provides the maximum stresses in the MPC due to the combined effect of internal pressure plus handling loads. Note that the dead weight of the MPC is considered part of the normal handling load, which is defined as a 2g acceleration.* ~~The reduction factor of 0.75 has been applied to allowable stresses for the partial penetration welds (ASME Section III, NC-3264.6).~~

Since the fuel basket can expand freely under the most severe accident condition thermal gradient, the thermal loads do not contribute to the primary stress levels in the MPC. The thermal stresses in the MPC, which are classified as secondary stresses, are reported in Table 4.2-7. Bounding reference temperatures are used, however, to determine the ASME stress limits in Table 4.2-8. It can be seen that all stresses are within allowable limits.

4.2.5.3.6 ~~PWR Basket~~*MPC* Fatigue Evaluation

The passive non-cyclic nature of dry storage conditions does not subject the MPC to conditions that might lead to structural fatigue failure. Ambient temperature and insolation cycling during normal dry storage conditions and the resulting fluctuations in MPC thermal gradients and internal pressure is the only mechanism for fatigue. These low stress, high-cycle conditions can not lead to a fatigue failure of the MPC, which is made from stainless alloy stock (endurance limit well in excess of 20,000 psi). All other off-normal or postulated accident conditions are infrequent or one-time occurrences that cannot produce fatigue failures. Finally, the MPC uses materials that are not susceptible to brittle fracture.

~~Fatigue effects on the PWR Basket are addressed using the criteria contained in ASME Section III, NC-3219.2. Fatigue analysis need not be performed provided the criteria of Condition A are~~

~~met. A summary of the criteria and their application to the PWR Basket are presented in the following paragraphs.~~

~~According to ASME Section III, NC-3219.2, fatigue analysis is not mandatory for materials having tensile strength not exceeding 80 ksi (provided for the PWR Basket components) and the expected number of cycles (a) + (b) +(c) + (d) is less than 1,000.~~

~~(a) Full Range Pressure Cycles~~

~~The full range pressure cycles are due to: vacuum drying, two pressure tests, postulated failure of all fuel rods and significant ambient temperature changes (conservatively assumed to occur 10 times per year during 40 years of the cask lifetime).~~

~~Therefore, the total number of fluctuations of this type is (a) = 1 + 2 + 1 + (10)(40) = 404.~~

~~(b) Expected Number of Pressure Cycles~~

~~The expected number of pressure cycles of this type is 0 since fluctuations in weather conditions need not be considered here.~~

~~(c) Effective Number of Changes in Metal Temperature Between Adjacent Points~~

~~The distance between adjacent points as defined by ASME Section III, NC3219.2 is $2\sqrt{Rt}$. It can be seen from the thermal analysis results that although the temperature of the PWR Basket changes significantly due to weather conditions, the change in the temperature difference between two adjacent points never exceeds 50°F. Therefore, the effective number of cycles of this type is 0.~~

~~(d) Only for Vessels With Welds Between Materials With Different Coefficients of Expansion~~

~~The PWR Basket design employs welding of the carbon steel tubes (corner frames) to the stainless steel PWR Basket shell. A thermal cycle occurs if $(\alpha_1 - \alpha_2)\Delta T$ is ≥ 0.00034:~~

~~Where:~~

~~α_1 - coefficient of thermal expansion for shell material (9.00×10^{-6} in/in/°F)~~

~~α_2 - coefficient of thermal expansion for tube material (6.26×10^{-6} in/in/°F)~~

~~ΔT - shell temperature difference (°F)~~

~~Substituting values and solving for ΔT yields:~~

~~$\Delta T < 124°F$~~

~~Since shell temperature is related to ambient air temperature, it would take approximately a 124°F air temperature change to result in one cycle. The maximum temperature for the region is 107°F with a minimum of -20°F. This represents a maximum temperature change of 127°F. If this extreme temperature variation is assumed to occur once per year for the design life of 40 years, this would result in 40 type (d) cycles.~~

~~The discussion presented in the preceding paragraphs shows that (a) + (b) + (c) + (d) = 454 and less than 1000. Thus, all criteria of Condition A are met and the PWR Basket is exempt from the fatigue analysis.~~

4.2.5.3.7 ~~PWR Basket~~*MPC* Pressure Test

The ~~PWR Basket~~*MPC* is hydrostatically tested to meet the requirements of ASME Section III, ~~NC-6221, 6222~~*Subsection NB, Article NB-6000 (with Table 4.2-1a exception), after fuel loading and lid welding are successfully completed.* ~~The stresses due to a test pressure of approximately 15 psig are acceptable based on results of the critical pressure analysis (Section 8.2) and evaluated per ASME Section III, NC-3217.~~ For pressurized conditions, maximum *primary* stresses occur in the ~~weld between the PWR Basket~~*MPC* shell and ~~the bottom~~*base*plate. These stresses calculated at a *maximum normal* design *internal* pressure of ~~10~~*100* psig are:

Shell

P_m = ~~0.2~~*6.86* ksi (ASME Service Level A Limit ~~15.2~~*18.7* ksi *at 400°F*)

$P_L + P_b$ = ~~4.6~~*10.6* ksi (ASME Service Level A Limit ~~22.7~~*30.0* ksi *at 300°F*)

Baseplate

P_m = *2.28 ksi* *(ASME Service Level A Limit 20.0 ksi at 300°F)*

$P_L + P_b$ = *20.5 ksi* *(ASME Service Level A Limit 30.0 ksi at 300°F)*

Where:

P_m = general primary membrane stress intensity

P_L = local primary membrane stress intensity

P_b = primary bending stress intensity

Table 4.2-8 summarizes the results of maximum stress evaluations for the ~~PWR Basket~~*MPC*. *In Table 4.2-8, the ASME Service Level A Limits for the MPC shell and baseplate are conservatively evaluated at 450 °F and 400 °F, respectively.*

~~Since maximum stresses are less than allowable, the test pressure meets requirements of the ASME Code, Section III, Subsection NC.~~

4.2.5.3.8 ~~PWR Basket~~*MPC* Fracture Toughness

The ~~PWR Basket~~*MPC* confinement boundary materials are made of austenitic stainless steel and are exempt from impact testing per ASME, Section III, ~~NC-2311~~*NB-2311*.

The ~~PWR Basket internal~~*MPC fuel basket structural* components are made of ~~carbon steel and are less than 5/8-inch thick~~*austenitic stainless steel*. ASME, Section III, NG-2311 exempts *austenitic stainless* materials ~~with a nomimal section thickness of 5/8-inch and less~~ from impact testing requirements.

~~4.2.5.3.9Basket Overpack Analysis~~

~~The Basket Overpack is designed for the same normal operation loads as the PWR Basket except for handling (a loaded Basket Overpack is not required to be handled).~~

~~The normal condition loads for Basket Overpack are dead weight, pressure, and thermal. Handling is not applicable because the loaded Basket Overpack is never lifted out of the Concrete Cask. The dead weight and normal pressure stresses are negligible. The Basket Overpack thermal stresses are conservatively assumed to be the same as those for the PWR Basket because although the temperature gradients are similar, the member thicknesses are smaller making the Basket Overpack more flexible.~~

~~The Basket Overpack pressure stresses are calculated using classical shell formulas. The results are evaluated in combination with other loadings in Table 4.2-8.~~

4.2.5.4 Concrete Cask Analysis ~~u~~*U*nder Normal Operating Loads

Three load components act on the Concrete Cask during normal operation: dead load, live load and thermal load due to differential thermal expansion. These components are analyzed below. The results of combining the loads and comparing the Concrete Cask stress levels to allowable limits are summarized in Table 4.2-10. As shown in this table, the Concrete Cask meets the structural requirements of ANSI 57.9 and ACI-349.[1]

[1] Refer to Section 4.2.4.2.4 for justification for deviation from ACI-349 temperature limits.

4.2.5.4.1 Concrete Cask Dead Load

The stress due to the dead load (f_D) on the Concrete Cask bottom is conservatively calculated by assuming the total weight of the fully loaded Concrete Cask (300,000 lbs which ~~includes~~ *bounds* the weight of ~~a Basket Overpack~~*the Concrete Cask and the maximum weight of a loaded MPC*) is taken by the concrete bottom only over a 12 inch wide area of the bottom plate. The stress is calculated to be 200 psi.

4.2.5.4.2 Concrete Cask Live Load

The Concrete Cask is subject to two live loads: the snow and ice load and the weight of a Transfer Cask and fully loaded ~~PWR Basket~~*MPC*. The snow load is uniformly distributed over the top of the Concrete Cask and represents a negligible contribution to Concrete Cask stress levels.

To calculate the stress due to the loaded Transfer Cask, it is assumed that the weight of the loaded Transfer Cask is taken by the steel liner and then by the ~~Transfer~~ *Concrete* Cask bottom. The stress in the steel liner is about ~~9,600~~*9,746* psi compression. The stress in the bottom (at *the* ~~Transfer~~ *Concrete* Cask center contact strip) is about ~~130~~ *132* psi compression, which also represents a negligible contribution to Concrete Cask stress levels.

4.2.5.4.3 Concrete Cask Thermal Stresses

The Concrete Cask thermal stress is calculated based on the temperature gradient across different components. The Concrete Cask wall analysis is based on the standard approach to concrete which assumes that it resists only compression with steel reinforcement resisting tension. Stresses are calculated by balancing tension and compression in the section because thermal loading can not produce any resultant force.

The thermal stresses in the Concrete Cask are calculated using a conservative temperature gradient of 104°F, which bounds the results for the normal and off-normal ambient conditions and the maximum anticipated heat load thermal gradient of 91°F as shown in Table 4.2-12 for the 12-hour maximum thermal accident condition. The ~~maximum~~ *bounding* thermal stresses for each of the Concrete Cask structural components are listed in Table 4.2-11. The acceptability of these thermal stress levels is included in the Concrete Cask load combination evaluated in Table 4.2-10.

4.2.5.4.4 Concrete Cask Load Combination

The evaluation of Concrete Cask load combinations in accordance with ~~ACI~~ *ACI*-349 and ANSI 57.9 is presented in Table 4.2-10. Load combinations 5, 6, and 8 include results of the accident analysis discussed in Chapter 8. For load combination 8, the thermal loads in the

critical sections are zero due to the self-balancing nature of the thermal stresses across the entire Concrete Cask section which resists the tornado missile impact. For load combination 6, the thermal stresses from Table 4.2-11 are recalculated into a moment using the standard technique for concrete analysis.

4.2.6 THERMAL EVALUATION

This section presents the thermal analysis of the storage system for normal operation. The significant thermal design feature of the storage system is the air flow path used to remove the maximum of ~~26 KWt~~*17.4 kWt* of decay heat~~ (24 KWt for Basket Overpacks)~~. This natural circulation of air inside the Concrete Cask allows the concrete temperatures to be maintained below the design limits and keeps the long term fuel cladding temperatures below limits where degradation might occur.

The base calculation was performed assuming 75°F ambient conditions to model the average long term temperatures expected over the life of the Concrete Cask. No solar load was used *in the base case* because the amount of time required for the massive Concrete Cask to heat up noticeably is substantially longer than the daylight time. Even if solar loads are assumed to affect the Concrete Cask for 12 to 14 day-light hours, they will only affect the outer concrete temperatures for the period the sun is shining. The remaining 10 to 12 hours in which solar load is not present allows the outer concrete to return to the temperature that would have been established without solar load. For normal ambient conditions, the ~~PWR Basket~~*MPC* and concrete temperatures are not affected by solar loads. Concrete Cask tests (Reference 2) demonstrate that little or no impact on fuel temperature is experienced as a result of solar loads.

To bound the expected temperature ranges in which the storage system might operate, two off-normal severe environmental temperature conditions were evaluated. These calculations are presented in Section 8.1.2. The cases considered are -40°F with no solar loads and 100°F with maximum solar loads. The maximum solar load was calculated to be the 24-hour average solar load to model the steady state temperature expected from long term (four to five days) exposure to 100°F air.

The 75°F ambient conditions are utilized to determine long term storage temperatures and -40°F and 100°F ambient temperatures are used to model extreme environmental conditions. In addition to these three cases, ~~three~~ *one* off-normal and *two hypothetical* accident conditions are analyzed. *The off-normal condition considers blockage of one-half of the air inlets, and is addressed in Section 8.1.2.* The first ~~off-normal case~~ *hypothetical accident is analyzed as presented in Section 8.2.2, and* considers a 125°F ambient condition with maximum solar loads and a maximum decay heat generation. ~~The next off-normal condition considers blockage of the air inlets on one side of the Concrete Cask (one-half of the inlets). These two cases are addressed in Section 8.1.2.~~ The final analysis, *also* a hypothetical accident condition, considers the complete blockage of all air inlets~~ and outlets~~. This analysis is addressed in Section 8.2.7.

Table 4.2-12 summarizes the results of the thermal calculations.

4.2.6.1 Summary of Thermal Properties of Materials

The thermal properties used in the thermal hydraulic analyses are shown in Table 4.2-13. The derived parameters (effective thermal conductivities) are discussed in *Section 4.2.6.3, Section* 4.2.6.5, *and Reference 16*. Low values derived from the open literature and conservative calculations were used.

Temperature limits were established for the materials used in the storage system. Specifically, these limits are for concrete, steel, *and* fuel cladding~~, and coatings~~. The limits were established in accordance with the following:

Source	Component
PNL-6364 Report and BFS analysis (long term) NUREG-1536/PNL-4835 (short term)	Fuel
ASME Section III ~~(1992)~~	Steel
ACI-349~~1~~[2]	Concrete
~~BFS Analysis~~	~~Coatings~~

Based upon evaluation of these limits it was determined that the fuel cladding and concrete temperature limits were the limiting conditions.

Table 4.2-12 presents more details on the long-term and short-term temperature limits for the concrete. While the concrete limit is based on ACI-349, Appendix A, the fuel cladding temperature limit is actually a complex function of temperature versus time, and internal rod pressurization (Reference 2). The limit is established to keep the probability of cladding breach less than 0.5~~%~~ *percent* per fuel rod over a 40-year storage term. Using the methodology presented in Reference 2, the fuel cladding allowable temperature limit *for normal steady-state conditions* was determined to be ~~374~~*341.7*°C (~~705~~*647*°F) for a Westinghouse 17 x 17 fuel assembly and a minimum cooling time of ~~5~~ *nine* years. The ~~374~~*341.7*°C (~~705~~*647*°F) limit was determined to bound the B&W 17 x 17 fuel assemblies, which will also be stored in the ISFSI. A short-term temperature limit of 570°C (1058°F) is established for off-normal and accident limits.

[2] Refer to Section 4.2.4.2.4 for justification for deviation from ACI-349 temperature limits.

In order to determine the applicability of the 1058°F short-term ~~guide~~ *limit* for spent fuel clad temperature in NUREG-1536, the Trojan spent fuel was compared to that fuel on which the temperature ~~guide~~ *limit* was based. According to PNL-4835, "Technical Basis for Storage of Zircaloy-Clad Spent Fuel in Inert Gas~~ses~~," the spent fuel on which 1058°F was based had a burnup of 28,000 MWD/MTU. The hoop stresses on the spent fuel rods that were tested ranged from approximately 25 MPa to 140 MPa. The maximum hoop stresses in the most limiting Trojan spent fuel rods (i.e., the fuel rods with the highest internal pressure and highest burnup) were within this range indicating that the Trojan fuel is comparable to the fuel rods tested on which the 1058°F ~~guide~~ *temperature limit* is based.

As can be seen in Table 4.2-12, the maximum steady-state temperature of the hottest (i.e., design basis) Trojan spent fuel that would occur during vacuum drying operations is ~~888~~*659*°F. ~~which~~ *This result* is *only slightly higher than the normal steady-state temperature limit of 647°F, and is* ~~170°F~~*substantially* below the short-term *temperature* limit of 1058°F, *indicating*~~. This indicates~~ that *a* significant margin exists to preclude fuel clad failure during vacuum drying operations or other short-term events. ~~As a result, no administrative time limit is required for the duration of fuel loading and vacuum drying operations for fuel clad considerations.~~*See Section 4.7.5 for a detailed discussion of the thermal evaluation of vacuum conditions.*

4.2.6.2 Thermal Models for Normal Storage Conditions - *Overview*

The Trojan Storage System cask configuration consists of a sealed canister (MPC-24E or MPC-24EF, which are identical from a thermal standpoint and are collectively referred to as "MPC" in this discussion) emplaced in a vertically oriented TranStor™ Concrete Cask. In this configuration, a column of air in the canister-to-cask annulur gap is thermally connected to the ambient air via top and bottom openings in the Concrete Cask. The canister decay heat elevates the temperature of air in the annulus causing it to rise. The upward air movement draws cold ambient air from the bottom inlets, which is heated by the canister shell in its upward travel and vented from the top ducts. In this manner, a continuous supply of air to the annulus is sustained without any aid of mechanical means, and the canister external surface is cooled by the movement of annulus air as long as there is heat in the canister. Within the MPC, certain features are engineered in the design for dissipating heat from the fuel stored in the cavity space. These features include a welded fuel basket construction and natural circulation convective heat transfer.

The MPC contains an all-stainless steel, full length welded honeycomb basket structure with square-shaped compartments of appropriate dimensions to allow insertion of the fuel assemblies prior to welding of the MPC lid and closure ring. Each box panel is equipped with a Boral (thermal neutron absorber) panel sandwiched between an alloy steel sheathing plate and the box panel, along the entire length of the active fuel region.

The MPC is backfilled with helium to provide a stable, inert environment for long-term storage of the spent nuclear fuel. The helium backfill gas is an integral part of the MPC thermal design

that fills all the spaces between solid components. To ensure that the helium gas is retained, the MPC confinement boundary is constructed in accordance with the provisions of the ASME B&PV Code Section III, Subsection NB, with certain approved deviations, as described in Table 4.2-1a.

The MPC fuel basket design features an uninterrupted panel-to-panel thermal connectivity realized by an all-welded honeycomb basket structure. The MPC design incorporates top and bottom plenums with interconnected downcomer paths. The top plenum is formed by the gap between the bottom of the MPC lid and the top of the honeycomb fuel basket, and by elongated semicircular holes ("mouseholes") in each basket cell wall. The bottom plenum is formed by rectangular shaped mouseholes at the base of all cell walls. The MPC basket is designed to eliminate structural discontinuities (i.e., gaps), which introduce large thermal resistances to heat flow. Consequently, temperature gradients are minimized in the design, which results in lower thermal stresses within the basket. Low thermal stresses are also ensured by an MPC design that permits unrestrained axial and radial growth of the basket. The possibility of stresses due to restraint on basket periphery thermal growth is eliminated by providing adequate basket-to-canister shell gaps to allow for basket thermal growth during heat-up to design basis temperatures.

It is apparent from the geometry of the MPC that the basket metal, the fuel assemblies, and the contained helium mass will be at their peak temperatures at or near the longitudinal axis of the MPC. The temperatures will attenuate with increasing radial distance from this axis, reaching their lowest values at the outer surface of the MPC shell. Conduction along the metal walls and radiant heat exchange from the fuel assemblies to the MPC metal mass would, therefore, result in substantial differences in the bulk temperatures of helium columns in different fuel storage cells. Since two fluid columns at different temperatures in communicative contact cannot remain in static equilibrium, the non-isotropic temperature field in the MPC internal space guarantees the incipience of the third mode of heat transfer: natural convection.

It is recognized that the backfill helium pressure, in combination with low pressure drop circulation passages in the MPC design, induces a thermosiphon upflow through the multi-cellular basket structure to aid in removing the decay heat from the stored fuel assemblies. The decay heat absorbed by the helium during upflow through the basket is rejected to the MPC shell during the subsequent downflow of helium in the peripheral downcomers. This helium thermosiphon heat extraction process significantly reduces the burden on the MPC metal basket structure for heat transport by conduction, thereby minimizing internal basket temperature gradients and resulting thermal stresses.

The helium columns traverse the vertical storage cavity spaces, redistributing heat within the MPC. The holes in the top and bottom of the cell walls, liberal flow space, and wide-open downcomers along the outer periphery of the basket ensure a smooth helium flow regime. The most conspicuous beneficial effect of the helium thermosiphon circulation, as discussed above, is

the mitigation of internal thermal stresses in the MPC. Another beneficial effect is reduction of the peak fuel cladding temperatures of the fuel assemblies located in the interior of the basket.

The Trojan cask thermal models employ benchmarked thermal solution methodology. The benchmarking work, documented in a Holtec Topical Report [Reference 16], consisted of simulating experiments carried out by an industry group on a full-scale cask tested in a variety of scenarios (horizontal and vertical orientation, helium and nitrogen filled, and vacuum). The tests used a vertical cask with a 24-cell honeycomb fuel basket containing irradiated PWR fuel (Westinghouse 15x15). The relevance of the benchmarking to cask modeling is established by the employ of a honeycomb basket construction, testing with real life fuel and a reasonably high cask heat load (20.6 kWt).

The thermal modeling methodology features the following constructs:

1. *An equivalent conductivity of the fuel assembly situated in a storage cell is computed.*

2. *The basket/fuel assemblage is simulated as an axisymmetric continuum with an equivalent in-plane conductivity.*

3. *The hydraulic resistance of the fuel is computed employing the porous media model.*

4. *The hydraulic resistance of the downcomer space is modeled as an equivalent hydraulic diameter.*

5. *The space between the fuel basket and MPC shell is modeled as a uniform radial gap filled with helium, as appropriate.*

The benchmarking study confirmed that the peak cladding temperature is overpredicted for all test scenarios. The thermal models are summarized in the following sections.
~~Three basic models were utilized for the thermal evaluation of the storage system. These are:~~

~~1. Air flow rate and temperature;~~

~~2. Concrete Cask body and PWR Basket exterior heat transfer; and~~

~~3. PWR Basket interior heat transfer;~~

~~These models are summarized in this section.~~

4.2.6.3 ~~Air Flow and Temperature Calculation~~*Global Model of the Trojan Storage System*

The Trojan Storage System thermal solution is produced by a two-step modeling process. In the first step, a Concrete Cask thermal model is constructed to compute the ventilation effect from annulus heating by the MPC decay heat. In this model, heat dissipation from the MPC lid and baseplate is conservatively neglected. In this manner, the annulus heating is maximized, which has the effect of overstating the air, concrete, and MPC shell temperatures. As an additional measure of conservatism, the MPC shell axial temperature profile is bounded by an Enveloping Linear Variation (ELV). The ELV is employed in the second step in a canister thermal model as a MPC shell temperature boundary condition. From the MPC thermal model, the temperature field of the stored spent nuclear fuel in a pressurized helium environment is obtained. The MPC thermal model employs the benchmarked thermal modeling methodology discussed in Section 4.2.6.2. The principal modeling conservatisms are discussed below.

~~The air flow up the annulus formed by the PWR Basket and Concrete Cask is calculated by determining the sum of the flow pressure losses ($\Sigma k/A^2$) due to all entrances, bends, straight sections, expansions, contractions, and exits and equating the resulting friction and form flow pressure losses to the pressure differential caused by the heating of the air (i.e., the stack or furnace effect).~~

~~The basic procedure for this calculation is to apply the macroscopic energy equation from the midpoint of the air inlet to the midpoint of the air outlet. This equation is:~~

$$\cancel{-\Delta P + \frac{g\,\rho_0 h}{g_c} - \frac{\rho g \beta h(\Delta T/2)}{g_c} + \frac{\dot{m}^2}{2\,g_c\,\rho}\sum_i \frac{k^i}{A_i^2} = 0} \qquad \cancel{(4.1)}$$

~~where:~~

~~ΔP — Pressure differential, inlet to outlet vents~~

~~$g\rho_0 h/g_c$ — Elevation pressure head where ρ_o is the ambient air density, h is the height, g the acceleration of gravity and g_c the gravitational conversion factor~~

~~$\rho g \beta h(\Delta T/2)/g_c$ — Pressure change due to air heating where ΔT is the air temperature difference between inlet and outlet air (°F), β is the compressibility factor, and ρ is the air density.~~

$$\frac{\dot{m}^2}{2\,g_c\,\rho}\sum_i \frac{k_i}{A_i^2}$$

~~Pressure loss due to friction and from loss of all flow segments I where m is the mass flow rate, A_i the flow area of the i-th segment and k_i the loss coefficient of the i-th segment.~~

~~Since the pressure difference between the inlet and outlet is equal to the elevation pressure head of the ambient air column, the first two terms in the above equation cancel out. Also, for the region of interest, β (the compressibility factor) can be approximated by 1/T (°R). Hence the equation reduces to:~~

$$\frac{\bar{\rho} g h(\Delta T/2)}{g_2 \bar{T}} = \frac{\dot{m}^2}{2 g_c \bar{\rho} \sum_i \frac{k_i}{A_i^2}} \qquad (4.2)$$

~~where the bar over the density and temperature terms denotes average values.~~

~~Using the above equation and the formula for steady state heat balance, i.e.,~~

$$\Delta T = \frac{Q_T}{(\dot{m} c_p)}$$

~~Where:~~

~~Q_T Total heat transfer to air~~

~~C_p Specific heat of air,~~

~~an iterative solution was derived for calculating the exit temperature and air mass flow rate. A spreadsheet program was used to perform this calculation. The axial heat source distribution is in direct proportion to the relative fuel burnup shown on Figure 7.2-1 and was used to calculate air temperature as a function of elevation as it flows through the Concrete Cask. Table 4.2-14 summarizes the results for the various ambient conditions. These results were then used in ANSYS finite element models for calculation of the Concrete Cask temperature distributions.~~

4.2.6.3.1 Isotropic Fuel Basket Conductivity

It is recognized that the emission of heat in a fuel assembly is axially non-uniform with maximum heat generation in the mid-section of the active fuel length and tapers off toward its extremities. The axial heat conduction in the fuel basket would act to diffuse and levelize the temperature field in the basket. It is also evident that the conduction of heat along the length of the basket occurs in an uninterrupted manner because of a continuously welded honeycomb structure. On the other hand, in-plane heat transfer is resisted by irremovable gaps that exist between fuel rods, between fuel assembly and basket cell walls. These gaps depress the in-plane conductivity

of the basket. In the Trojan thermal modeling, the axial conductivity of the basket/fuel assemblage is set equal to the in-plane conductivity. This assumption has the direct effect of throttling axial heat flow and therefore elevating the temperature of stored fuel.

4.2.6.3.2 Downcomer Gap Conservatism

The MPC basket-to-shell clearance space is modeled as a helium-filled radial gap. This region consists of an azimuthally varying gap formed by the square-celled basket outline and the cylindrical MPC shell. At the locations of closest approach a differential expansion gap (a small clearance on the order of 0.1 inch) is engineered to allow free thermal expansion of the basket. At the widest locations, the gaps are on the order of the cell opening (approximately 9 inches). It is evident that heat dissipation by conduction is highest at the closest approach locations and that convective heat transfer is highest at the widest gap locations (large downcomer flow). In the thermal modeling, a radial gap is used that is large compared to the basket-to-shell clearance and small compared to the cell opening. As a relatively large gap penalizes heat dissipation by conduction and a small gap throttles convective flow, the employment of a single gap understates both conduction and convection heat transfer.

4.2.6.3.3 Zero (0) Percent Fuel Rods Rupture

All MPC thermal field calculations are based on a zero percent fuel rods rupture assumption. This minimizes the cavity pressure to understate heat dissipation for fuel temperature calculations. For postulates that require the assumption of large fuel rod ruptures, these temperature fields are grossly overstated.

4.2.6.3.4 Neglect of Flux Trap Gaps

Engineered in the MPC honeycomb basket structure are flux trap gaps between fuel cell walls. These are through-height, open helium flow channels that aid in the removal of heat from the adjacent fuel cells. These helium flow channels are conservatively neglected in the thermal analyses.

4.2.6.3.5 Differences Between the Trojan MPC and the Generic Holtec Design

For accommodating the generic HI-STAR/HI-STORM 100 MPC in a TranStor™ Concrete Cask as opposed to the HI-STAR 100 or HI-STORM 100 overpack, certain changes to the generic MPC design were necessary. These changes are summarized below:

1. *Reduced MPC Height*

   The overall height of the MPC is reduced by about 9 inches to fit the canister in the shorter Concrete Cask cavity.

2. *Shorter Mousehole Height*

The fuel basket bottom mousehole shape was modified to rectangular and the height was shortened to allow a necessary relocation of the Boral neutron absorber plates in the fuel basket panels. This was necessary for providing coverage of certain TNP fuel with a low-elevation active fuel region.

3. *Enlarged Peripheral Cells*

Four corner peripheral cells were enlarged to accommodate the Trojan Failed Fuel Cans. These are fuel cell locations 3, 6, 19, and 22 (see Figure 4.2-1b).

4.2.6.3.6 Other Assumptions and Parameters

The Trojan Storage System configuration was evaluated for postulated storage scenarios for normal, off-normal and accident conditions. For ready reference, these conditions are tabulated below:

CONDITION	AMBIENT TEMPERATURE (°F)	INSOLATION
Normal Operation		
Steady State	75	No
Off-Normal Conditions		
Severe Cold	-40	No
Severe Hot	100	Yes
Half Inlets Blocked	75	No
MPC in Transfer Cask with He (Case i)	75	No
MPC in Transfer Cask with He (Case ii)	100	Yes
MPC in Transfer Cask with Vacuum (Case iii)	75	No
Accident Conditions		
12 Hour Max. Thermal	125	Yes
All Inlets Blocked	100	Yes

For solar heating of the cask surfaces, the 10 CFR 71.71(c) 12-hour insolation was employed in the Trojan Storage System thermal modeling. The solar load calculated for a 12-hour period for the top surface is 2950 BTU/ft^2 per day and 1475 BTU/ft^2 for the curved side surfaces. This is extremely conservative because the vertical Concrete Cask sides will never have the heat load on both sides simultaneously and much of the Concrete Cask side will be shaded by the adjacent Concrete Casks. These thermal loads are averaged over a 24-hour period and used in the 100°F

and 125°F ambient storage scenarios. The steady state heat flux on the top and side surfaces are 123 Btu/ft^2-hr and 61 BTU/ft^2-hr respectively.

The FLUENT model consists of the axisymmetric 3-D MPC space, the Concrete Cask, and the enveloping tank. The cask storage thermosiphon-enabled solution is computed in a two-step process. In the first step, a Concrete Cask thermal model computes the ventilation effect from annulus heating by MPC decay heat. This model is schematically illustrated in Figure 4.2-9. In this model, heat dissipation is conservatively restricted to the MPC shell (i.e., heat dissipation from MPC lid and baseplate are completely neglected. This modeling assumption has the effect of overstating the MPC shell, annulus air and concrete temperatures. In the next step, the temperature of stored fuel in a pressurized helium canister (thermosiphon model) is determined using the thermal solution in the first step to fashion a bounding MPC shell temperature profile for the MPC thermal model, shown in Figure 4.2-10. The finite-volume model constructed in this manner will produce an axisymmetric temperature distribution. The peak temperature will occur at the centerline and is expected to be above the axial location of peak heat generation.

4.2.6.4 Concrete Cask Body and ~~PWR Basket~~*MPC* Exterior Thermal Model

Thermal models of the axisymmetric MPC space and the Concrete Cask were developed using the FLUENT Computational Fluid Dynamics (CFD) code. As discussed earlier, the cask thermal solution is computed in a two-step process. A model of the Concrete Cask with annulus heating from an emplaced MPC is constructed to compute the ventilation flows and temperature of concrete and MPC shell. The ambient air outside the Concrete Cask envelope was modeled by encircling a reference cask with an oversized Hypothetical Cylinder (HC) that is five times the cask diameter. The inner surface is conservatively modeled as an adiabatic reflecting boundary to conservatively neglect in-plane heat dissipation. To conservatively model air flow resistance, the cask interior flow passageway and duct screen openings are constricted. Second order external effects, such as wind and interaction with surrounding casks, are bounded by these conservative assumptions and are therefore neglected. A summary of the essential features of this model is presented in the following.

1. *A conservative lower bound canister pressure of 4.5 atmospheres is postulated for the pressurized canister.*

2. *Heat input due to insolation is applied to the top surface and cylindrical surface of the cask with a theoretical bounding solar absorbtivity of 1.0.*

3. *The heat generation in the MPC is uniform in each horizontal plane but varies in the axial direction.*

4. *The bottom surface of the Concrete Cask, in contact with the ISFSI pad, is modeled as an adiabatic boundary.*

5. *The most disadvantageously placed cask (i.e., the one subjected to maximum radiative blockage) is modeled.*

~~Heat is generated in the fuel that is located in the PWR Basket. This heat is conducted through the PWR Basket and then convected to the air (that is maintained at a temperature established by the air flow calculation) and radiated to the Concrete Cask internal liner. Heat on the Concrete Cask liner is also convected to the air and a small amount is conducted through the concrete. The concrete surface dissipates heat by convecting and radiating into the ambient temperature. On a sunny day, additional heat enters the Concrete Cask through the exterior surface as solar insolation.~~

~~Radiation heat from all surfaces is addressed by:~~

$$q = \sigma \varepsilon F A (T_1^4 - T_2^4) \qquad (4.3)$$

~~where:~~

~~q = Heat flow rate, BTU/hr~~

~~σ = Stefan-Boltzman constant, 1.714×10^{-9} BTU/hr-ft^2-°R^4~~

~~ε = emissivity~~

~~F = Radiative geometry view (form) factor~~

~~A = Radiating surface area, ft^2~~

~~T = Absolute source (1) and target (2) temperatures, °R~~

~~Surface emissivities vary with the radiating material and are provided in Table 4.2-13. View factors vary with surface and target geometry.~~

~~Convection from all surfaces is addressed by:~~

$$q = hA(T_1 - T_2) \qquad (4.4)$$

~~where:~~

~~h = Natural convection heat transfer coefficient, BTU/hr-ft^2-°F~~

~~Heat conduction is expressed by the following differential equation:~~

$$\rho c_p (dT/dt) = d (k\, dT/dx)/dx + q''' \qquad (4.5)$$

where:

k = Thermal conductivity, BTU/hr-ft-°F

ρ = Density, lbm/ft^3

c_p = Specific heat, BTU/lbm-°F

q''' = Heat generation rate, BTU/hr-ft^3

These heat transfer modes are addressed by the ANSYS/THERMAL computer program. The model is presented in Figure 4.2-9. All units used in the calculations and in the programs are consistent: BTU, ft, hr, °F, °R, lbm. Two element types were used, the 3-D solid element (SOLID 70) and a radiation link element (LINK 31). Thermal properties are specific to the materials (see Table 4.2-13 for thermal properties).

4.2.6.4.1Concrete Cask Modeling Techniques and Assumptions

The model uses a 10° slice to model the entire Concrete Cask. The Concrete Cask geometry and temperatures are uniform with angular direction so that the two dimensional portrait is adequate. The 10° slice is small so as to minimize the complexity of the nodalization while still accurately representing the radial volume distribution.

The air vents were not included in the model. Because of the low thermal conductivity of concrete, the air vents affect only a local region. The model included low incoming and high exiting air temperatures below and above the heated region, respectively, to assure that temperature extremes are represented. The air in the heated region was modeled as a heat sink at the temperatures shown in Table 4.2-14.

The solar radiation heat input, used for the 100°F case, is per the requirements of 10 CFR 71.71(c). The solar load calculated for a 12 hour period for the top surface was 2950 BTU/ft^2 per day while 1475 BTU/ft^2 was used for the curved side surfaces. This is extremely conservative because the vertical Concrete Cask sides will never have the heat load on both sides simultaneously and much of the Concrete Cask side will be shaded by the adjacent Concrete Casks. These thermal loads were converted to average rates by assuming the sun shines 12 of the 24 hours per day and used in the 12 Hour Maximum Heat Load calculation. In the steady state calculations, in order to determine the contribution from solar heat gain, the above thermal loads were converted to a 24 hour heat rate. The steady state heat rate for 24 hours results in heat fluxes on the top and side surfaces of 123 and 61 BTU/ft^2, respectively. Solar insolation was treated in the model as a volumetric heat generation. Although actual solar insolation appears as a uniformly distributed heat flux on the Concrete Cask surface, the ANSY/THERMAL program

~~allows heat fluxes only at nodes, this causes hot spot nodes on the Concrete Cask surface. To compensate, use of a heat region as a thin (0.25in) shell assures uniform application of the solar flux in the elements of the thermal model. The generation rate was calculated as the above heat rate divided by the volume of the thin shell of concrete.~~

~~The PWR Basket portion of the Concrete Cask model treats only the PWR Basket shell in detail. The interior was simply modeled as a heat generating region with an effective thermal conductivity. This effective thermal conductivity (2.4 BTU/hr-ft-°F) was estimated from the Concrete Cask test data (References 3, 4, 5, 6, and 7) only to accommodate the solution methods employed by ANSYS. The only interest in the PWR Basket in this model is the surface heat flux and the PWR Basket shell temperatures. The details of the PWR Basket interior were evaluated in a separate model.~~

~~4.2.6.4.2Radiation~~

~~Radiation is included at surfaces radiating to the atmosphere and between the annular air spaces in the Concrete Cask. View factors of unity were assumed for the inner surfaces.~~

~~The view factor for the Concrete Cask exterior is calculated as 0.14 between the side of the Concrete Cask and its surroundings (i.e., Concrete Cask array on 15 ft centers). Concrete Casks and the ground are considered at equilibrium. The side view factor is calculated based on an average distance (11.87 ft) to the other Concrete Cask (averaged on five different side locations). This is conservative as the solar insolation is assumed to load the entire vertical surface of the Concrete Cask while only 14% of the surface is assumed to re-radiate heat. Indeed, if the solar load is actually present on the entire Concrete Cask surface (i.e., a single Concrete Cask), then the entire Concrete Cask's surface could radiate back to the atmosphere. In reality, moving the Concrete Casks closer together will decrease the solar load on the Concrete Cask because of shading of adjacent Concrete Casks. The top of the Concrete Cask was assumed to have a view factor of unity with respect to the sky.~~

~~4.2.6.4.3Convection~~

~~Natural convection heat transfer coefficients were taken as 2.0 BTU/hr-ft^2-°F on surfaces as discussed in Section 4.2.6.4. This is a conservative value compared to full-scale experimental data from other casks.~~

4.2.6.5 ~~PWR Basket~~*MPC* Thermal Hydraulics

Transport of heat from the interior of the MPC to its outer surface is accomplished by a combination of conduction through the MPC basket metal grid structure, and conduction and radiation heat transfer in the relatively small helium gaps between the fuel assemblies and basket cell walls. Heat dissipation across the gap between the MPC basket periphery and the

MPC shell is by a combination of helium conduction, natural convection, radiation, and MPC internal helium circulation.

The cross section bounded by the inside of the storage cell, which surrounds the assemblage of fuel rods and the interstitial helium gas, is replaced with an "equivalent" square section characterized by an effective thermal conductivity. Figure 4.2-11 pictorially illustrates the homogenization concept. The effective conductivity of the cell space is a function of temperature because the radiation heat transfer process is a strong function of the temperatures of the participating bodies. Therefore, in effect, every storage cell location has a different value of effective conductivity (depending on the coincident temperature) in the homogenized model. The temperature-dependent fuel assembly region effective conductivity is determined by a finite volume procedure.

In the next step of homogenization, a planar section of MPC is considered. With each storage cell inside space replaced with an equivalent square region, the MPC cross section consists of a metallic gridwork (basket cell walls with each square cell space containing a solid fuel cell square of effective thermal conductivity, which is a function of temperature) circumscribed by a circular ring (MPC shell). Because the total rate of heat transfer within the MPC includes radiative heat transfer, which is a temperature-dependent effect, the equivalent conductivity of the MPC basket region is also computed as a function of temperature. Finally, it is recognized that the MPC section consists of two discrete regions, namely, the basket region and the peripheral region. The peripheral region is the space between the peripheral storage cells and the MPC shell. This space is essentially full of helium surrounded by Type 304 stainless steel plates. Accordingly, as illustrated in Figure 4.2-12, the MPC cross section is replaced with two homogenized regions. In particular, the effective conductivity of the fuel cells is subsumed into the equivalent conductivity of the basket cross section. The ANSYS finite element code is the vehicle for all modeling efforts described in the foregoing.

Internal circulation of helium in the sealed MPC is modeled as flow in a porous media in the fueled region containing the spent nuclear fuel (including top and bottom plenums). The basket-to-MPC shell clearance space is modeled as a helium filled radial gap to include the downcomer flow in the thermal model. The downcomer region consists of an azimuthally varying gap formed by the square-celled basket outline and the cylindrical MPC shell. At the locations of closest approach, a differential expansion gap is engineered to allow free thermal expansion of the basket. At the widest locations, the gaps are on the order of the fuel cell opening (approximately 9 inches). In the FLUENT thermal model, a radial gap that is large compared to the basket-to-shell clearance and small compared to the cell opening is used. As a relatively large gap penalizes heat dissipation by conduction and a small gap throttles convective flow, the use of a single gap in the model understates both conduction and convection heat transfer in the downcomer region.

The MPC temperature distributions at 75°F, 100°F and 125°F ambient air conditions are shown in Figures 4.2-13, 4.2-14 and 4.2-15, respectively.

~~The PWR Basket analysis is conservatively based on the two-dimensional model of the hottest cross-section. Heat is generated in the fuel assemblies and transferred to the surrounding inert atmosphere and the PWR Basket sleeves by free convection and radiation. In turn, the heat is conducted through the storage sleeves towards the exterior of the sleeve assembly. It then conducts, convects, and radiates through the cover gas to the PWR Basket shell wall. Convection inside the PWR Basket is natural convection.~~

~~4.2.6.5.1Fuel heat generation~~

~~Fuel heat generation rates were calculated by assuming 1.08 KW_t of heat generation per assembly (26 KW_t/ 24 assemblies). The hottest horizontal slice of the fuel region was converted to a volumetric heat generation as follows:~~

$$\cancel{q''' = (P) \times (Q/\underline{v}) \qquad (4.6)}$$

$$\cancel{= 591\ (BTU/hr\text{-}ft^3)}$$

~~where:~~

~~P = Maximum axial peaking factor = 1.1~~

~~Q = Heat/assembly = 3,697 Btu/hr~~

~~$\underline{v}$ = Storage Sleeve assembly volume = 6.88 ft^3~~

~~4.2.6.5.2Radiation~~

~~Radiation is included at all surfaces radiating to the PWR Basket shell. For simplicity, shape factors were assumed to be 1.0 with direct radiation to the PWR Basket shell. Internal fuel assembly radiation is included in the effective fuel conductivity calculation.~~

~~4.2.6.5.3Fuel Equivalent Conductivity~~

~~Heat transfer in the fuel region is a complex combination of conduction, convection, and radiation. This heat transfer was modeled as conduction only by assuming the fuel region to be a solid with an equivalent fuel conductivity k_f.~~

~~4.2.6.5.4Helium Equivalent Conductivity~~

~~Heat transfer in the helium region is a combination of conduction and free convection throughout the PWR Basket. For the wide flow regions shown in the PWR Basket model, the conduction~~

~~coefficient of 2.8 BTU/hr-°F-ft was derived in Reference 8 based on experimental results for other casks. In the narrow areas, no credit is taken for convection and a helium conductivity value of 0.11 BTU/hr-°F-ft is used.~~

~~Heat transfer modes are addressed by the ANSYS/THERMAL computer code. The geometry of the PWR Basket interior was converted to the finite element model shown in Figure 4.2-10. The model represents a horizontal slice of unit thickness through the hottest section. The symmetrical nature of the storage system allowed use of a 45° sector model of the PWR Basket. This symmetry was utilized by imposing zero heat flux boundary conditions along the 0° and 45° model boundaries. Two element types were used, the two dimensional solid element and a radiation link element. The highest shell temperature calculated from the Concrete Cask model is used as a boundary condition. Thermal properties are specific to the materials and are presented in Table 4.2-13. The PWR Basket temperature distributions at 75°F, 100°F and 125°F ambient air conditions in a Concrete Cask, are shown in Figures 4.2-11, 4.2-12 and 4.2-13, respectively. The PWR Basket temperature distributions at 75°F and 100°F ambient air conditions, in the Transfer Cask with helium backfill, are shown in Figures 4.2-14 and 4.2-15, respectively.~~

4.2.6.6 Maximum Temperatures

Maximum ~~T~~temperatures ~~distributions~~*in the MPC and the Concrete Cask* for the normal, off-normal, severe environmental, and the accident conditions are shown in Table 4.2-12. It can be seen that, *with the exception of the hypothetical accident condition of "all inlets blocked,"* the *temperatures of the* components of the storage system ~~are~~ *remain* below their corresponding *allowable* limits. *For the "all inlets blocked" scenario, the inner concrete short-term temperature limit (350°F) is reached in approximately 57.1 hours. However, procedural controls and periodic storage system monitoring and surveillance ensure that any blockage of air inlets is identified and/or removed well before the limiting inner concrete temperature limit is reached.*

4.2.6.7 Minimum Temperatures

The possibility of brittle fracture was considered for minimum temperatures. As stated in Section 4.2.5.3.8, brittle fracture is not of concern for the ~~PWR Basket~~*MPC*.

4.2.6.8 Maximum Internal Pressure

The ~~PWR Basket~~*MPC* is backfilled with helium to a *nominal* pressure of ~~14.5 +0 -0.5 psia~~*31.3 psig* at the conditions present during normal operations. The maximum internal pressure calculated for normal ambient conditions is ~~8.5~~*57.7* psig and the associated stresses are included in the structural analysis in Section 4.2.5. The worst case internal pressure is ~~52.9~~*94.8* psig and occurs during a postulated accident where fuel rods inside the ~~PWR Basket~~*MPC* are

breached and release their fission gases. This case and the resulting pressure and stresses are described in Section 8.2.6.

4.2.6.9 Evaluation of Cask Lifetime Performance ~~u~~*U*nder Normal Conditions of Storage

As shown in the preceding sections, the storage system operates within the thermal design limits. Therefore, no degradation due to temperature effects on materials or components is expected during the lifetime of the cask.

4.2.7 CRITICALITY EVALUATION

The criticality evaluation was performed using the ~~KENO-Va module of the SCALE-4.1~~*MCNP4a* code ~~package~~ (Reference 9). The model analysis was based on *fuel dimensions that bound both the* Westinghouse 17x17 standard fuel *and the*~~. The ISFSI storage system will also contain~~ B&W 17x17 fuel~~ which is considered to be bounded by the Westinghouse fuel. The only significant difference in these two types of fuel assemblies is the B&W assembly has a slightly smaller fuel pellet diameter. The smaller pellet size makes the B&W assembly slightly less reactive and is, therefore, bounded by Westinghouse analysis.~~

~~The f~~*F*our *larger sized* corner cells of a*n* ~~PWR Basket~~*MPC* may contain fuel debris inside *Process Cans and* a Failed Fuel Can. ~~A fuel debris~~*The* mass ~~limit of 7.5 kg per PWR Basket will be administratively controlled. A limit of 7.5 kg~~ of fuel debris *in Process Cans* is significantly less than the fuel mass of an intact fuel assembly (~~~~*approximately* 460 kg ~~u~~*U*ranium). The ~~7.5 kg of~~*fuel debris* fuel mass *in Process Cans* will not be nearly as reactive as an intact fuel assembly no matter how the fuel debris is arranged within the Failed Fuel Can. The ~~7.5 kg of~~ fuel mass *in Process Cans* will not cause thermal, structural, or shielding problems no matter how it is distributed within the Failed Fuel Can.

The parameters of concern for criticality evaluations are initial enrichment, burnup, moderation, poisons, and geometry. These parameters combined produce the reactivity of the system which is measured as K_{eff}. Neutron poison plates ~~are~~ included in the ~~PWR Basket~~*MPC* design *provide criticality control*~~to meet the transportation requirements of 10 CFR Part 71~~. ~~Although neutron poison plates are included in the design of the PWR Basket, no c~~*C*redit was taken for these plates in the dry storage criticality analysis, *consistent with the analysis for the flooded condition. However, the effect of these plates on reactivity under dry conditions is small.*

The analysis relies on ~~PWR Basket~~*MPC fuel basket* geometry, and conservatively assumes an initial fuel enrichment of ~~4.2~~*3.7* wt% U^{235} with no credit taken for burnup. *With respect to the criticality analysis, these* ~~E~~*f*uel enrichment *and burnup* assumptions conservatively bound the fuel to be stored which has a maximum initial enrichment of 3.56 wt% U^{235} and has accumulated varying amounts of burnup.

The ~~PWR Basket~~*MPC* atmosphere *during storage operations* was assumed to be ~~inerted with~~ helium. Water moderation was not considered since it would require significant ~~PWR Basket~~*MPC* in-leakage coincident with an incredible flood (the ISFSI is located above the credible flood plane).

The calculated K_{eff} is ~~0.3882~~*0.3278*, with a one sigma statistical error of ~~0.0011~~*0.0003*. The addition of code bias and uncertainty effects results in calculated K_{eff} of ~~0.4077~~*0.3311* for the dry storage condition.

4.3 AUXILIARY SYSTEMS

The storage system is self-contained and uses a passive design that does not require auxiliary process or cooling systems for operation. It is designed for safe interim storage of spent nuclear fuel, ~~failed~~ *damaged* fuel, and fuel debris by transferring heat to the ambient air.

4.3.1 VENTILATION AND OFF-GAS SYSTEMS

The spent fuel and other radioactive materials are confined within the ~~PWR Basket~~*MPC* ~~which~~ *that* is stored within the Concrete Cask. There are no expected radioactive releases during normal and off-normal operations. ~~In the unlikely event a leaky PWR Basket must be placed in a Basket Overpack, evacuation of the Basket Overpack and backfilling with helium would be required. This evolution is discussed in Chapter 5. A suitable filtration system would be required for the vacuum system vent path during this evolution.~~ Initial ~~PWR Basket~~*MPC* loading and ~~vacuum drying~~*moisture removal are* ~~is~~ performed in the ~~Trojan Nuclear Plant~~*TNP* Fuel Building under the controls of the 10 CFR 50 license and the restrictions imposed by the ISFSI Technical Specifications.

4.3.2 ELECTRICAL SYSTEMS

The ISFSI design relies on the natural circulation of air to provide cooling of the spent nuclear fuel. Heat generated by the spent nuclear fuel is transferred to the air located in the Concrete Cask annulus. This heated air rises and exits via air outlets (4) located near the top of the Concrete Cask. Ambient air enters via air inlets (4) located at the bottom of the Concrete Cask. This passive design eliminates the need for utilities to support storage conditions. Electrical power is provided for security requirements which are addressed in the ISFSI Physical Security Plan. Electrical power is also available to support instrumentation such as temperature monitoring.

4.3.3 AIR SUPPLY SYSTEMS

An air supply is not required at the ISFSI during storage. The air pad system is anticipated to be the only requirement for compressed air usage at the ISFSI site. A permanent compressed air supply is not provided for the ISFSI since usage is anticipated to occur only during initial loading and final offsite transport of the ~~PWR Baskets~~*MPC*. Portable air compressors can be utilized when required.

4.3.4 STEAM SUPPLY AND DISTRIBUTION SYSTEM

A steam supply is not required for storage system operations.

4.3.5 WATER SUPPLY SYSTEM

A water supply is not required for the normal operation of the storage system.

During the loading of spent fuel into the ~~PWR Basket~~*MPC*, ~~clean borated water or~~ filtered ~~fuel pool~~ water is pumped into the ~~PWR Basket~~*MPC*-to-Transfer Cask gap. This water requirement will be met by the existing Trojan plant systems.

4.3.6 SEWAGE TREATMENT SYSTEM

There are no sewage treatment systems required for ISFSI operation. The ISFSI is a passive, at grade, system ~~which~~ *that* does not require fluid systems for operation. Site drainage is accommodated by the existing TNP drainage system. Sanitary facilities for ISFSI staff are available in the existing Trojan Central Building.

4.3.7 COMMUNICATION AND ALARM SYSTEMS

A commercial telephone system is provided for communications with the corporate office and local and federal agencies. Portable radios are available for use by the operations staff and security staff as required. The existing communications system is also utilized for emergency plan notifications and training.

4.3.8 FIRE PROTECTION SYSTEM

The ISFSI location, along with the Concrete Cask layout and use of noncombustible and heat resistant material, make the storage system design highly resistant to the effects of fire. Only small electrical or vehicle fires are considered credible in the ISFSI. Portable fire extinguishers are available in the unlikely event of a small fire. The potential hazard to the ISFSI presented by fires is discussed in Section 8.2.9.

4.3.9 MAINTENANCE SYSTEMS

Prior to the transfer of fuel from the Spent Fuel Pool to the Concrete Cask, the Concrete Cask is inspected for damage. Once in storage, the storage system is designed to be passive and requires no maintenance. Vent outlet temperature monitoring and inspections of air inlets ~~and outlets~~ for blockage are performed (per Technical Specifications) to assure proper operation of the storage system. Additionally, the Concrete Cask exterior is inspected annually to identify any surface defects.

4.3.10 COLD CHEMICAL SYSTEMS

There are no cold chemical systems required for the storage system.

4.3.11 AIR SAMPLING SYSTEMS

Spent fuel is stored within the sealed and inerted ~~PWR Basket~~*MPC*. The ~~PWR Basket~~ *MPC* is designed to maintain a confinement boundary during all operating conditions. Since there are no operations or credible accident scenarios ~~which~~ *that* are expected to result in a release of radioactive material, permanently installed air sampling equipment is not required. Portable air monitoring equipment can be utilized as conditions warrant.

4.3.12 SEISMIC MONITORING INSTRUMENTATION

The seismic monitoring instrumentation consists of peak recording accelerometers which are subject to periodic inspection and maintenance to ensure availability to record data from seismic events.

4.4 DECONTAMINATION SYSTEMS

4.4.1 EQUIPMENT DECONTAMINATION

Decontamination equipment is not required at the ISFSI. Decontamination activities are performed in the Fuel Building prior to transferring the Concrete Cask to the ISFSI Storage Pad. This activity removes contamination from the outside surfaces of the Transfer Cask, Lifting Yoke, and *the top and* upper end of the ~~PWR Basket~~*MPC* caused from immersion in the Spent Fuel Pool.

Section 5.1.1.2 describes the procedures implemented to minimize the contamination of the ~~PWR Baskets~~*MPC* and Transfer Cask during loading operations. This section also discusses the decontamination of the Transfer Cask as well as the exterior surface of the ~~PWR Basket~~*MPC*. Surveys are performed on these components and decontamination, if required, would be performed prior to transfer to the ISFSI.

4.4.2 PERSONNEL DECONTAMINATION

Since the ~~PWR Basket~~*MPC* is decontaminated prior to transfer to the Storage Pad and the radioactive material is sealed within the ~~PWR Basket~~*MPC*, personnel decontamination facilities are not required during storage.

4.5 ~~SHIPPING~~ *TRANSPORT* CASK REPAIR AND MAINTENANCE

There is no ~~Shipping~~ *Transport* Cask repair or maintenance facility at the Trojan ISFSI site. Repair and maintenance facilities, *if needed,* will be provided by the ~~Shipping~~ *Transport* Cask 10 CFR 71 certificate holder.

4.6 CATHODIC PROTECTION

The Trojan ISFSI is a dry, above ground system so that cathodic protection in the form of impressed current is not required. The normal operating temperatures are well above ambient air dew point temperatures so that there is no opportunity for condensation on any surfaces.

Several measures are taken to provide corrosion protection for the ~~PWR Basket~~*MPC*. The ~~PWR Basket~~*MPC* shell *and fuel basket are* ~~is~~ constructed of ~~corrosion resistant~~*stainless steel* material, *except for the Boral neutron absorbers*. To avoid contact of dissimilar materials, the bottom of the ~~PWR Basket~~*MPC* is separated from the steel bottom plate of the Concrete Cask liner by ceramic tiles. ~~The PWR Basket internals are coated to provide corrosion protection during immersion in fuel pool water.~~ After the ~~PWR Basket~~*MPC cavity* is sealed, dried, and backfilled with helium, the ~~PWR Basket~~*MPC internals are* ~~is~~ maintained in an inert environment to further protect from corrosion. Finally, the ~~PWR Basket~~*MPC* is protected from the environment by the surrounding Concrete Cask and Concrete Cask lid.

4.7 SPENT FUEL AND HIGH-LEVEL RADIOACTIVE WASTE HANDLING OPERATION SYSTEMS

This section addresses ISFSI components utilized in moving the ~~PWR Baskets~~*MPCs* and Concrete Casks into storage and eventually off-site. Loading operations for spent nuclear fuel are performed in the Fuel Building. The Fuel Building systems are operated under the plant 10 CFR 50 license. Evaluation of the Fuel Building structure, components and systems is within the scope of the Trojan Nuclear Plant SAR.

The fuel handling components that are considered to be a part of the Trojan ISFSI are:

Transfer Cask

Transfer Station

Air Pad System

Lifting Yoke[2] *(Not used for lifting at the ISFSI)*

~~PWR Basket Hoist Rings~~*MPC Lift Cleats*

4.7.1 STRUCTURAL SPECIFICATIONS

The Transfer Cask and Transfer Station are classified as important to safety and are relied upon to safely handle the ~~PWR Baskets~~*MPC*. Quality Assurance requirements are outlined in Chapter 11.

The remaining systems are not classified important to safety and are purchased as commercial grade items.

The design and fabrication codes for the components are as follows:

Component	Governing Code/Standard[1]
Transfer Cask[2,3]	~~NUREG 0612 / ANSI N14.6 (AISC)~~*ASME Section III, Subsection NF*
Transfer Cask Lifting Trunnions	*NUREG-0612/ANSI N14.6*
Transfer Station	AISC Manual of Steel Construction
Air Pad System	Commercial grade
Lifting Yoke[~~2~~3]	NUREG--0612/ANSI N14.6
~~PWR Basket~~*MPC* ~~Hoist Rings~~ *Lift Cleats*	NUREG--0612/ANSI N14.6

[1] Applicable revision of governing code/standard is provided in Chapter 3.
[2] *Except lifting trunnions and certain non-code items.*
[~~2~~3] Not used for lifting at ISFSI.

4.7.2 INSTALLATION LAYOUT

4.7.2.1 Building Plans and Sections

Loading of the ~~PWR Baskets~~*MPCs* and Concrete Casks will be performed within the Fuel Building under the 10 CFR 50 license. Certain restrictions related to fuel loading are also contained in the ISFSI Technical Specifications. ISFSI handling operations, which are discussed in Chapter 5, are anticipated to be limited to transferring ~~PWR Baskets~~*MPCs* from the Concrete Casks to a ~~Shipping~~ *Transport* Cask for off-site storage or disposal. These operations will take place on the ISFSI Storage Pad *and Transfer Pad* utilizing the Transfer Station. Neither the ISFSI Storage Pad nor the Transfer Station is located within a building or structure. The design of the ISFSI Storage Pad is discussed in Section~ 4.2.2.1. The design of the Transfer Station is discussed in Section 4.7.3.2.

4.7.2.2 Confinement ~~f~~*F*eatures

Confinement features relied upon during handling operations are the same as those during storage. Confinement features are discussed in Section 4.2.3.

4.7.3 INDIVIDUAL UNIT DESCRIPTION

4.7.3.1 Transfer Cask Description

The Transfer Cask is a *cylindrical steel weldment designed to facilitate the transfer of a loaded MPC to and from the Concrete Cask or into the Transport Cask. The Transfer Cask structure is designed in accordance with ASME Section III, Subsection NF. The lifting trunnions on the Transfer Cask are designated as* special lifting device*s* designed and fabricated ~~to the requirements~~*in accordance with the guidance* of NUREG–0612 and ANSI N14.6. The Transfer Cask ~~is also designed as a~~*provides the necessary* shielding ~~bell~~ to reduce the dose to Trojan plant personnel in accordance with ALARA principles.

The Transfer Cask is used for lifting and transporting ~~PWR Baskets~~*MPCs* in the Fuel Building. The Transfer Cask ~~is~~ *may also be* used in conjunction with the Transfer Station at the ISFSI to temporarily hold the ~~PWR Baskets~~*MPC* during transfer into and out of Concrete Casks~~, Basket Overpacks~~ or ~~Shipping~~ *Transport* Casks. The Transfer Cask is not used for lifting at the ISFSI.

The *Trojan* Transfer Cask ~~consists of a cylinder~~*design is similar to the Holtec HI-TRAC 100,* with moveable shield doors at the lower end and a top ~~cover~~*lid with a hole in the center. The hole allows for lifting sling access to raise or lower the contained MPC. The bottom of the Transfer Cask is designed for a compatible fit with the top of the Concrete Cask.* The cylindrical wall of the Transfer Cask consists of various material layers. The inner and outer ~~surface layers~~*shells* are made of steel. Sandwiched between the steel ~~surface layers~~*shells* is a thickness of lead. *A water jacket welded to the outer shell provides neutron shielding when filled. The Transfer Cask is required to have water in the water jacket prior to dewatering the MPC.* ~~(inside) and neutron absorbing material (outside).~~ The movable shield doors at the lower end allow lowering of the ~~PWR Basket~~*MPC* into the ~~Transfer~~ *Concrete* Cask *or the Transport Cask.* The doors slide in steel guides along each side of the Transfer Cask. ~~Two steel pins per door~~*Mechanical stops* are used to prevent inadvertent opening of the doors. Hydraulic pistons are used to open the doors for the ~~PWR Basket~~*MPC* transfer. The top ~~cover~~ *lid* of the Transfer Cask extends over the ~~PWR Basket~~*MPC* to *provide shielding and to* prevent the ~~PWR Basket~~*MPC* from being inadvertently lifted out of the top of the Transfer Cask.

In the Fuel Building, the Transfer Cask is lifted from above by the Lifting Yoke via two *lifting* trunnions located on the outer shell ~~approximately three feet from the top of the Transfer Cask~~. *The lifting trunnions consist of a threaded cylindrical trunnion screwed into a trunnion block that is welded to the inner and outer shell of the Transfer Cask.* The *lifting* trunnion~~s~~ *assemblies* are solid steel and extend radially from the Transfer Cask body. Each trunnion *block* is welded to the inner and outer steel shells of the Transfer Cask wall with ~~full~~ *partial* penetration ~~circumferential~~ welds. The two *lifting* trunnions are capable of accommodating the combined weight of the Transfer Cask and a fully loaded wet ~~PWR Basket~~*MPC* while meeting the ~~requirements~~ *guidance* of NUREG–0612. The ~~Transfer Cask and~~*lifting* trunnions are fabricated

in accordance with ANSI N14.6 requirements and are tested to 300~~%~~ *percent* of their maximum design load.

Figure 4.7-1 provides a description of the Transfer Cask. Figure 4.7-2 provides a description of the *lifting* trunnions.

4.7.3.2 Transfer Station

Since the Trojan Nuclear Plant Spent Fuel Pool ~~may~~ *will* not be available for ~~PWR Basket~~*MPC* transfer from the Concrete Cask to the ~~Shipping~~ *Transport* Cask at the time DOE or another repository facility is available, the ISFSI is designed as a stand alone facility. The ISFSI is equipped with a Transfer Station to support dry transfer operations.

The Transfer Station is important to safety and designed for Seismic Margin Earthquake (SME) ground motions applied in any direction. The structural steel Transfer Station allows a Concrete Cask or ~~Shipping~~ *Transport* Cask to be positioned under the Transfer Cask for ~~PWR Basket~~*MPC* transfers. A collar inside the station is clamped around the Transfer Cask approximately at the height of its center of gravity and locked in place to stabilize the Transfer Cask during handling operations. Transfer operations are discussed in Section~~s 5.1.1.5 and 5.1.1.6~~*5.1.1.7*. The use of the Transfer Station restricts the potential handling accidents to those analyzed in Section 8.2.13.3.

A summary of the Transfer Station fabrication specifications is provided in Table 4.7-1. Figure 4.7-3 provides a description of the Transfer Station.

4.7.3.3 Air Pad System

A commercially available air pad system will be utilized for moving the Concrete Casks on the Storage Pad. The air pad system consists of four individual air pads approximately 48 inches square. In order to insert the air pads under the Concrete Cask, the inlet air screens must be removed. The air pads are positioned under the Concrete Cask in the air inlet channel area and pressurized. The effective lift height of the air pads is approximately 3 inches. The Concrete Cask can then be moved to the desired location where the air pads are depressurized and removed. The air inlet screens can then be reinstalled.

4.7.3.4 Lifting Yoke

The Lifting Yoke is designed and fabricated to mate with the Transfer Cask *lifting* trunnions and provide a means to lift the loaded Transfer Cask in the Fuel Building. *Prior to first use,* ~~T~~*t*he Lifting Yoke ~~was~~ *is* tested to ~~300%~~ *150 percent* of its maximum design load. Figure 4.7-4 provides a drawing of the Lifting Yoke.

4.7.3.5 ~~Hoist Rings~~*MPC Lift Cleats*

The top of the MPC lid is equipped with four threaded holes that allow the loaded MPC to be raised/lowered through the Transfer Cask using two lift cleats. The lift cleat assemblies consist of the cleats and attachment hardware. The lift cleats are important to safety components supplied as solid steel components that contain no welds. The lift cleats are used to support and vertically move the loaded MPC inside the Transfer Cask during MPC transfer between the Transfer Cask and the Concrete Cask or Transport Cask. The lift cleats, attachment hardware, and threaded holes in the MPC lid are designed in accordance with ~~The Hoist Rings are commercially available and are inserted into the threaded connections provided in the PWR Basket structural lid. Section 4.7.4.4 provides an analysis of the Hoist Rings to demonstrate they meet the requirements of~~ NUREG-0612 and ANSI *N*14.6 *(see Section 4.7.4.4).*

4.7.3.6 Mobile Cranes

The ISFSI design does not include a permanently installed crane, thereby requiring the use of a mobile crane for handling operations. Transferring loaded ~~PWR Baskets~~*MPCs* at the ISFSI is performed within the specially designed Transfer Station. With the exception of minor boom adjustments to ensure proper alignment of the ~~PWR Basket~~*MPC*, the handling of loaded ~~PWR Baskets~~*MPCs* within the Transfer Station is limited to vertical hook movements to raise the ~~PWR Basket~~*MPC* into the Transfer Cask and to subsequently lower the ~~PWR Basket~~*MPC* into a Concrete Cask~~, Basket Overpack,~~ or ~~Shipping~~ *Transport* Cask.

The use of mobile cranes at nuclear power plants is governed in part by ANSI/ASME N45.2.15, with technical requirements specified in ANSI B30.5 (1994). Prior to handling spent fuel casks (i.e. ~~PWR Baskets~~*MPCs*), procedures for load handling, inspection, safe loads analysis and load tests in accordance with ANSI/ASME N45.2.15 will be in place.

Use of mobile cranes at the Trojan ISFSI will also conform to the guidance in NUREG-0612, "Control of Heavy Loads at Nuclear Power Plants." The use of mobile cranes at the Trojan ISFSI will conform to the guidelines of Section 5.1.1 of NUREG-0612 with the exception that mobile cranes will meet the requirements of ANSI B30.5, "Mobile and Locomotive Cranes," in lieu of the requirements of ANSI B30.2, "Overhead and Gantry Cranes." The mobile crane used at Trojan will have a ~~safety factor of two~~*rated capacity of at least twice the design basis payload, including lifting devices*, in accordance with *the guidance of* Section 5.1.6(1)(a) of NUREG--0612, and will be capable of stopping and holding the load during a Seismic Margin Earthquake (SME).

In addition, the potential drop of a loaded ~~PWR Basket~~*MPC* has been evaluated as described in SAR Section 8.2.13. The structure of the Transfer Station limits potential ~~PWR Basket~~*MPC* drops to vertical end drops from within the Transfer Cask into an empty Concrete Cask or ~~Shipping~~ *Transport* Cask. The design of the Transfer Cask precludes lifting the ~~PWR~~

~~Basket~~*MPC* beyond the top of the Transfer Cask. Limit switches or load limiters will be set to ~~ensure~~ *minimize the likelihood* that the mobile crane ~~cannot~~ *will* lift the combined weight of the Transfer Cask and ~~PWR Basket~~*MPC* from the Transfer Station *due to an overlift of the MPC. Nevertheless, the Transfer Cask top lid bolting is designed to ensure the MPC remains inside the Transfer Cask during such an event (see Section 4.7.4.1.5).* A specially designed impact limiter in the base of the Transfer Station limits the consequences of this potential drop. The evaluation of this potential drop conforms to the guidelines of Appendix A to NUREG-0612 and demonstrates that a postulated drop would not result in the breach of the ~~PWR Basket~~*MPC* confinement boundary~~ or significant damage to the spent fuel that could result in a criticality accident~~.

4.7.4 STRUCTURAL ANALYSIS OF THE FUEL HANDLING COMPONENTS

4.7.4.1 Transfer Cask Lift

A loaded Transfer Cask weight of *at least* 215,000 lbs is used for the lifting device ~~analysis~~*analyses*. This is higher than the maximum weight in Table 4.2-4 and, therefore, conservative. Table 4.7-2 provides the results of the stress analysis for the Transfer Cask lift components.

4.7.4.1.1 *Lifting* Trunnions

The adequacy of the Transfer Cask *lifting* trunnion design can be evaluated by considering the stress levels in the *lifting* trunnion and the Transfer Cask wall. The Transfer Cask lifting trunnion~~s~~ ~~was~~ *are* designed with a factor of safety of ~~5~~ *10* or greater on ultimate and ~~3~~ *6* or greater on yield and includes the dynamic load increase factor of ~~10%~~ *15 percent*.

The *maximum* shear stress (τ) of the *lifting* trunnion is:

$$\tau = \frac{(\text{Weight of } \cancel{\text{PWR Basket}}MPC + \text{Transfer Cask})}{(2) \times A_T} \times \cancel{1.1 \times 4/3}\,1.15$$

$$= \cancel{1.44}\,76 \text{ ksi}$$

The maximum bending stress(σ_b) in the *lifting* trunnion is calculated as:

$$\sigma_b = \frac{(\text{Weight of } \cancel{\text{PWR Basket}}MPC + \text{Transfer Cask}) \times L}{(2) \times S} \times \cancel{1.1}\,1.15$$

where:

L = Distance between *face of* Transfer Cask ~~outer wall~~*trunnion block* and mid-point of load application

S = Trunnion section modulus

σ_b = ~~1.9~~*16.6* ksi

The maximum *lifting* trunnion principal stress (S_I), is determined by combining shear stress and bending stress as follows~~ (conservative because they occur at different points)~~:

$$S_I = \sigma_b/2 + [(\sigma_b/2)^2 + \tau^2)]^{0.5}$$

$$= \cancel{2.7}17.8 \text{ ksi}$$

Therefore, the factors of safety, φ_u(ultimate) and φ_y(yield), for the trunnion (S_u = ~~70~~ *181.3* ksi and S_y = ~~31.9~~*147.0* ksi for ~~trunnion~~ *SB-637-N07718* steel, at work temperature) are:

$$\varphi_u = S_u/S_I = \cancel{25.9}10.2 > \cancel{5}10$$

$$\varphi_y = S_y/S_I = \cancel{11.8}8.2 > \cancel{3}6$$

Hence, the *lifting* trunnions ~~is~~ *are* adequate (*and* meet~~s~~ NUREG--0612-1980/ANSI *N*14.6-1993) to carry the weight of the Transfer Cask with the ~~PWR Basket~~*MPC* fully loaded with fuel and water.

4.7.4.1.2 Transfer Cask Wall

To evaluate the structural integrity of the Transfer Cask wall, an ANSYS finite element analysis was performed with the model shown in ~~Figure 4.7-5~~*Appendix 3.AE of the HI-STORM 100 System FSAR*. The model focuses on the Transfer Cask wall region near the *lifting* trunnion because this is the most critical region. *This model is applicable for use in evaluating the Trojan Transfer Cask because the generically certified HI-TRAC transfer cask is identical in design in the area of the lifting trunnions.* Only a quarter of the Transfer Cask is modeled due to symmetry. The 3-D "SOLID45" ~~and "SHELL63"~~ elements are used for the *lifting* trunnion and Transfer Cask shells~~ respectively~~.

The primary stresses in the top flange, the inner shell, and the outer shell in the vicinity of the lifting trunnion attachment must not exceed the membrane and membrane plus bending stress limits per the ASME Code, Section III, Subsection NF, for Level A conditions. A bounding weight of 250,000 lbs was assumed in the analysis.~~NUREG-0612/ANSI N14.6 states that safety factors of 3 and 5 only apply to stresses that would not be relieved by local yielding,~~

~~i.e., general stresses.~~ The maximum ~~relevant principal~~*primary* stress*es* in the Transfer Cask wall caused by ~~the lifting~~*this bounding* load applied at the *lifting* trunnion ~~was calculated to be~~*are*:

~~Transfer Cask Wall~~ Max. ~~Principal~~ *Primary Membrane* Stress, ~~S_t~~ P_m = ~~6.69~~*10.5* ksi

Max. Primary Membrane Plus Primary Bending Stress, $P_m + P_b$ = *12.5 ksi*

Therefore, the factor*s* of safety on this stress are:

~~Transfer Cask Wall Factors of Safety~~ ~~$\varphi_u = S_u/S_t = 70/6.69 = 10.5 \geq 5$~~

~~$\varphi_y = S_y/S_t = 45.6/6.69 = 6.8 \geq 3$~~

SF (primary membrane) = *17.5/10.5*
= *1.67*

SF (primary membrane plus primary bending) = *26.2/12.5*
= *2.10*

In addition, the average stress across the highest loaded section modeled does not exceed one-third of the material yield stress at temperature; this is in keeping with the requirements of Regulatory Guide 3.61.

~~In addition, the highest local stress in the trunnion-to-shell junction area was calculated to be 13.4 ksi.~~

~~Therefore, the factor of safety on this stress is:~~

~~Trunnion to Shell Factors of Safety~~ ~~$\varphi_u = S_u/S_t = 70/13.4 = 5.2 \geq 5$~~

~~$\varphi_y = S_y/S_t = 45.6/13.4 = 3.4 \geq 3$~~

4.7.4.1.3 Shield Door Rail and Welds

The shield door rails must support the weight of a fully loaded ~~PWR Basket~~*MPC* and the weight of the shield doors themselves (a total of approximately ~~101,500~~*104,200* lbs). The rail design consists of a thick steel plate welded to the bottom of a rectangular solid section of steel. The rail is welded to the bottom plate of the Transfer Cask wall. For the analysis, the rails were assumed

to have an overall length of ~~48~~ *46* inches (i.e., the supported length of the closed shield doors). The shield door rail design is shown on Figure 4.7-6.

The design load for the rails (considering ~~10%~~ *15 percent* dynamic factor) is

$$W = \cancel{101{,}500}\,104{,}200 \cdot \cancel{1.1}\,1.15$$
$$= \cancel{111{,}650}\,119{,}830 \text{ lbs}$$

The structural integrity of the rails is evaluated by first considering the rail bottom plate and its welds. The shear stress in the rail bottom plate due to the applied load of W is:

$$\tau = \frac{W}{2 \times L \times t} = \cancel{0.8}\,0.87 \text{ ksi}$$

where:

W = Design load = ~~111,650~~ *119,830* lbs

L = Rail length

t = Rail bottom plate thickness

The maximum bending stress in the rail bottom plate, σ_b, occurs at the section through the inner bottom weld and is calculated below.

$$\sigma_b = M/(Lt^2/6) = (W/2) \times \delta/(Lt^2/6) \qquad \cancel{(4.9)}$$

where:

M = Moment in bottom plate
= $(W/2) \times \delta$

δ = Applied load moment arm (~~1.375~~ *1.25* inches)

σ_b = ~~4.3~~ *4.34* ksi

The bottom plate maximum principal stress is then,

$$\text{Bottom Plate } S_1 = \sigma_b/2 + [(\sigma_b/2)^2 + \tau^2]^{0.5}$$
$$= \cancel{4.4}\,4.51 \text{ ksi}$$

Although the Transfer Cask is designed in accordance with ASME III, Subsection NF, the stress criteria from ANSI N14.6 are applied here for added conservatism. ~~which b~~Based on *the* ~~material~~ properties of the material (S_u = ~~58~~*70* ksi, S_y = ~~32.8~~*34.6* ksi), ~~provides a~~*the* safety factors ~~of~~*are*:

φ_u= ~~13.2~~*15.5* > 5

φ_y= ~~7.5~~*7.7* > 3

The rail lower welds were evaluated by first determining the reactive forces, F_o and F_i, experienced by the outer and inner welds due to the applied load. These forces are found from simple balance of forces and moments.

F_o = (δ/w) x (W/2) = ~~11.8~~*13.4* kips

F_i = [(w + δ)/w](W/2) = ~~67.7~~*73.3* kips

where:

w = Distance between welds

Therefore, for the two lower welds the maximum shear stress ($\tau_{lower\ weld}$) occurs at the inner groove weld and is calculated as:

$\tau_{lower\ weld}$ = $F_i/(\delta_w$-*t groove* x L)
= ~~2.3~~*3.19* ksi

and the maximum principal stress at the weld is (for pure shear condition):

Lower Weld S_t = $\tau_{lower\ weld}$ = ~~2.3~~*3.19* ksi

Which provides factors of safety of:

φ_u = ~~25.2~~*22.0* > 5

φ_y =~~14.3~~*10.9* > 3

4.7.4.1.4 Welds Attaching the Rails to Transfer Cask Shell

The load on the weld between the rail and Transfer Cask wall includes the loaded wet ~~PWR Basket~~*MPC* as well as the weight of doors and rails for the total of approximately ~~106,500~~*108,200* lbs (~~117,150~~*124,430* lbs with a ~~1.1~~*1.15* load amplification factor). ~~Evaluation of the structural integrity of the rail upper welds is affected by the curved geometry of the outer~~

~~weld (see Figure 4.7-6). This effect stems from the fact that the load distribution between the two upper welds varies with position along the rail.~~ The analysis is done using the standard methodology of treating the weld as a line. The area and section ~~modulus~~*moduli* of the weld *per one inch of weld throat* are calculated to be ~~93.4~~*83.0* in.~~²~~*/in* ~~and~~ ~~278.0~~*171* in.~~³~~*/in* respectively. The center of gravity location is shown in Figure 4.2-8. Then the applied moment (M) is calculated to be ~~210~~*199* kip-in.

Weld force per unit of length (F_w) is calculated as:

$$F_w = (W/2) / A_w + M / S_w = \cancel{1.4}1.91 \text{ kips/in}$$

Conservatively assuming a ~~1/2"~~*1/2-inch* fillet weld, the stress (f_w) is calculated as:

$$f_w = F_w / (t_w / \sqrt{2}) = \cancel{4.0}5.4 \text{ ksi}$$

The ultimate and yield safety factors (φ_u and φ_y) based on material properties are:

$$\varphi_u = S_u/S_f = \cancel{14.5}13.0 > 5$$

$$\varphi_y = S_y/S_f = \cancel{8.2}6.4 > 3$$

4.7.4.1.5 Top ~~Cover Plate~~*Lid*

The purpose of the top ~~cover plate~~*lid* is to *provide radiation shielding and to* prevent inadvertent lifting of the ~~PWR Basket~~*MPC* out of the Transfer Cask. Therefore, the ~~cover plate~~*top lid and its attachment hardware* must have sufficient strength to support the *weight of an empty* Transfer Cask (since an inadvertent ~~PWR Basket~~*MPC* lift would ~~imply~~ *cause the* lifting *of* the entire Transfer Cask by the ~~cover plate~~*top lid with the load path through the top lid studs*). Since this would be an off-normal condition, NUREG-0612 safety factors do not apply and AISC allowable stresses are used for design.

The ~~cover plate~~*top lid* is a steel ring with a *27-inch diameter* center opening ~~slightly smaller than the PWR Basket diameter~~. The central opening allows access to the ~~PWR Basket~~*MPC* ~~Hoist Rings~~ *lift cleats* when *raising or* lowering the ~~PWR Basket~~*MPC out of or* into the Concrete Cask. ~~Sixteen~~ *Twenty-four studs and nuts* ~~bolts~~ hold the ~~cover plate~~*top lid* in place.

The stresses on the inner and outer edges, σ_i and σ_o, of the ~~cover plate~~*top lid* can be calculated ~~from the following equations~~*using formulas from* ~~(~~Reference ~~4.~~10~~)~~.

$$\sigma_i = \left[\frac{-3W}{4\pi m t^2}\right]\left[(m+1)\left(2\ln\frac{a}{r_0} + \frac{r_0^2}{a^2} - 1\right)\right] - \frac{6M}{t^2}\frac{[a^2(m-1) - b^2(m+1)]}{[a^2(m-1) + b^2(m-1)]} \qquad (4.10)$$

$$\sigma_0 = \left[\frac{3W}{2\pi t^2}\right]\left[1 - \frac{r_0^2}{a^2}\right] + \frac{6mM}{t^2}\frac{[2b^2]}{[a^2(m-1) + b^2(m+1)]} \qquad (4.11)$$

where:

M = [W/8πm] [(m+1)(2 ln(a/r_o) + r_o^2/a^2 – 1)]

W = Weight of Transfer Cask (with lid)

r_o = Radius of applied load = PWR Basket outer radius

a = Cover plate bolt circle radius

b = Radius of cover plate central opening

m = 1/Poisson's ratio = 1/0.3 = 3.33

t = Cover plate thickness

Substituting numerical values into the above formulas yields,*The results are:*

σ_i = 1.2*2.62* ksi

σ_o = 13.2*8.73* ksi

The shear stress on the outer edge of the cover plate*top lid*, τ_o, is calculated as:

τ_o = W / 2πat = 0.5*0.59* ksi

Therefore, the cover plate*top lid* maximum principal stress due to the applied load is:

S_1 = $\sigma_o/2 + [(\sigma_o/2)^2 + \tau^2]^{0.5}$ = 13.2*8.77* ksi

Comparing this stress level to the acceptance criteria shows the ~~cover plate~~*top lid* is structurally adequate, i.e.,

~~13.2~~*8.77* ksi < ~~24.6~~*26.0* ksi (0.75F_y allowable per AISC)

4.7.4.1.6 ~~Cover Plate~~*Top Lid* Bolts

The load on a single bolt due to the reactive force caused by an inadvertent ~~PWR Basket~~*MPC* lift is:

F_F = ~~W/16~~*W/24* = ~~7.5~~*5.71* kips

The load on each bolt due to the bending moment in the ~~plate~~ *lid* (prying action) is:

$$F_M = \cancel{2\pi a M_r/16\,L}\ 2\pi a M_r/24\,L = \frac{2\pi a\,\sigma_o t^2/6}{\cancel{16}\,24 \times L}.$$

where:

L = Radial distance from outer edge of ~~cover plate~~*top lid* to bolt circle

M_r = Moment per circumferential length = $\sigma_o t^2/6$

t = ~~Cover plate~~*Top lid* thickness

σ_o = ~~13.2~~*8.73* ksi, see ~~cover plate~~*top lid* calculation section

a = Bolt circle radius

which after numerical evaluation yields:

F_M = ~~21.5~~*4.56* kips

Therefore, the tension on each bolt, F, is calculated as:

F = $F_F + F_M$ = ~~29.0~~*10.3* kips

which is within the acceptable range, i.e.,

F = ~~29.0~~*10.3* kips < ~~34.6~~*25.0* kips (allowable load for ~~1" A-325~~*1-inch SA-193 B7* bolt per AISC)

4.7.4.2 Air Pad System

The Concrete Cask may be lifted from below using air pads. This bottom lift is the normal lifting mode employed when moving the Concrete Cask out to the Storage Pad to its storage location. It should also be noted that the lift device is not considered important to safety since the Concrete Cask lift is limited to only 3 inches. The air pad system accommodates the fully loaded weight of a Concrete Cask (i.e., Concrete Cask, ~~PWR Basket~~*MPC*, 24 fuel assemblies with control components) which is conservatively assumed to be 300,000 lbs. The adequacy of the lift is evaluated by calculating the bearing pressure on the Concrete Cask bottom and comparing it to allowable bearing pressure per ACI-349. Allowable bearing stress is:

$$P_b = \varphi(0.85f'_c) \qquad \cancel{(4.7)}$$
$$= 0.7(0.85 \cdot 4000) = 2{,}380 \text{ psi}$$

The Air Pad bearing pressure is calculated based on the bearing area

p= Weight / (air pad area - inlet duct area - air pad area outside of cask envelope)

=42.5 psi

Air pad bearing stresses are negligible. No shear forces or bending moments will exist in the Concrete Cask because the air pads effectively cover the whole bottom area. Hence, the concrete will not crush during a bottom lift of the Concrete Cask.

4.7.4.3 Lifting Yoke

The Lifting Yoke is designed, *in accordance with NUREG-0612 and ANSI N14.6,* to lift the combined weight of the Transfer Cask and a fully loaded ~~PWR Basket~~*MPC* in the Fuel Building. ~~For conservatism the analysis assumed a loaded Transfer Cask weight of 215,000 lbs. The Lifting Yoke weight is assumed to be 7,000 lbs. A dynamic load amplification factor of 1.1 was assumed.~~ *The maximum normal or combined shear stress in each of the components is limited to the minimum of either 1/10 of the material ultimate strength or 1/6 of the material yield strength.*

Figure 4.7-4 provides a drawing of the Lifting Yoke. ~~The maximum principal stress was calculated using the following equation:~~

$$\cancel{\sigma_1 = \frac{\sigma}{2} + \sqrt{[(\frac{\sigma}{2})^2 + \tau^2]}}$$

~~Where: σ = bending stress~~
~~τ = shear stress~~

~~The maximum principal stress was calculated for the Lifting Yoke components. The components analyzed were: beams, pins, yoke arms, and hook. The maximum principal stress for each of these components was then compared to allowable yield and ultimate stress for its material of construction. These components were found to have safety factors of greater than 3 for yield stress, and greater than 5 for ultimate stress.~~

~~The lowest service temperature for the Lifting Yoke was determined to be -3°F. Use of the Lifting Yoke is limited to ambient temperatures greater than -3°F to satisfy fracture toughness requirements.~~

4.7.4.4 ~~Hoist Rings~~*MPC Lift Cleats*

The adequacy of the ~~PWR Basket~~*MPC* lifting devices is demonstrated by considering each of the ~~Hoist Rings~~*MPC lift cleats, the lifting holes and attaching bolts,* the ~~PWR Basket structural~~*MPC* lid, and its weld to the shell. The design of the ~~PWR Basket~~*MPC* incorporates ~~8 lifting points~~*four (4) threaded holes in the top lid,* which ~~may be considered as two redundant load paths, each using 4 Hoist Rings~~*accept a pair of MPC lift cleats* (refer to Figure 8.2-6). *The HI-STAR 100 FSAR (Appendix 3.K of Reference 17) includes an analysis of the lifting holes and an assumed lifting bolt. The MPC lid and lid-to-shell weld are also evaluated in the HI-STAR 100 FSAR for loaded lifting operations. The minimum safety factors for the lid and its peripheral weld are 6.5 and 2.3, respectively. An analysis of the lift cleat is provided here.*

The lift cleat is considered as a plane frame structure subjected to a uniform pressure load from the lifting operation. There are two lift cleats, each supporting 50 percent of the lifted load (i.e., the loaded MPC). Frame solutions were used to establish the stress distribution in the lift cleat section. The analysis assumes a dynamic load increase factor of ~~10%~~*15 percent*~~and calculated the stresses associated with a single load path using 4 Hoist Rings. In addition, since the load is applied at a slight angle, a horizontal load component is introduced.~~

~~The Hoist Ring evaluation is based on the manufacturer's rated capacity and provided load factors. The safety factor for the Hoist Rings (single load path of 4 lift points) was determined to be 5.33. This assumed a maximum lift angle of 12° (this equated to a height between the PWR Basket Hoist Rings and lifting point of not less than 11 feet). Administrative controls will be implemented to ensure the lift angle is maintained below this limit.~~

~~The minimum thread engagement for the Hoist Rings was determined based on the strengths of materials to ensure stripping of thread material in the structural lid would not occur (since the structural lid is made of softer material than the hoist ring bolts). The minimum thread engagement was determined to be 1.95 inches and will be ensured by administrative procedures.~~

~~The structural lid and PWR Basket shell are evaluated based on the finite element analysis results of the Sierra Nuclear Corporations VSC-24 calculations (Reference 8). The structural lid thickness for the PWR Basket is the same as used for the VSC-24. The wall thickness for the PWR Baskets is the same thickness used in a VSC-24 lifting device calculation. The PWR Baskets have a slightly increased diameter. Adjustments are made for the new loads as well as for the slight increase in diameter. The load change is incorporated by scaling. Geometry changes are ratioed, since stress is proportional to $(1-r^2/a^2)$, where r is the radius of the load application and a the plate radius.~~

The maximum ~~principal~~ *normal or combined shear* stress ~~was determined to be 5.0 ksi which results in a safety factor of 13.2 for ultimate stress and 4.3 for yield stress~~*in each of the lift cleats is limited to the minimum of either 1/10 of the material ultimate strength or 1/6 of the material yield strength for 50 percent of the total lifted load. From the analysis, the minimum safety factor for each MPC lift cleat is 1.04 over and above the 6 and 10 safety factors suggested by ANSI N14.6.*

~~The above analysis was based on 4 Hoist Rings supporting the PWR Basket load. The PWR Baskets will be lifted using 8 Hoist Rings.~~ Section 8.2.13.1.2 analyzes the accident condition in which a*n* ~~PWR Basket~~*MPC* ~~lift~~ *overlift* results in lifting the Transfer Cask.

4.7.5 THERMAL EVALUATION DURING FUEL TRANSFER

The Transfer Cask model and calculations are presented below.

4.7.5.1 Transfer Cask Heat Transfer Modes

Heat is generated in the fuel assemblies and transferred to the Transfer Cask from the ~~PWR Basket~~*MPC* surface by radiation and conduction through the air annulus between the ~~PWR Basket~~ *MPC* and *the* Transfer Cask in a manner similar to that described in Section 4.2.6.4 for the Concrete Cask and *the* ~~PWR Basket~~*MPC*. The heat is then conducted through the Transfer Cask wall and convected and radiated from its outer surface. The heat transfer modes inside the ~~PWR Basket~~*MPC* are the same as discussed in Section ~~4.2.6.4~~*4.2.6.5*.

The ~~ANSYS/THERMAL~~*FLUENT* finite ~~element~~ *volume* model similar to that ~~of the Concrete Cask is~~ *described in Section 4.2.6.4 was* used for the analysis~~ and presented in Figure 4.7-5~~. *The FLUENT model of the Transfer Cask is depicted in Figure 4.7-8.* ~~An a~~*A*mbient temperatures of 75°F *and 100°F* ~~was~~ *were* used in the analysis.

~~As described in Section 4.2.6.4, the PWR Basket internals are not modeled in detail since the only interest for the PWR Basket in this model is the shell temperature.~~ This analysis determines *the* temperature distribution in the Transfer Cask and *the* ~~PWR Basket~~*MPC* ~~shell~~. Figures ~~4.7-~~

~~7~~*4.7-9 and 4.7-10 show the temperature distribution in the MPC in the Transfer Cask for ambient temperatures of 75°F and 100°F, respectively. Figure 4.7-11* presents the *temperature* profile through the ~~Concrete~~ *Transfer* Cask wall at the hottest section. ~~The highest shell temperature is used as a boundary condition in the PWR Basket analysis described below.~~ The results *of the analysis* are summarized in Table 4.2-12.

4.7.5.2 ~~PWR Basket Thermal Hydraulic Model~~*Vacuum Drying*

~~The PWR Basket was modeled using the ANSYS/THERMAL finite element code as discussed in Section 4.2.6. The PWR Basket hot-slice model was used to estimate the PWR Basket components and fuel temperatures. For the PWR Basket drying case, the PWR Basket model was modified to represent vacuum conditions. The inner helium elements were removed. The resulting model only includes radiation from the guide sleeves to the PWR Basket wall. Based on the benchmarks performed for vacuum cases of other cask tests and the higher temperatures, the fuel effective thermal conductivities were left unchanged. The shell temperature from the Transfer Cask was used as a bounding condition for the PWR Basket analysis. The results are presented in Table 4.2-12.*Prior to sealing an MPC loaded with fuel, it is dewatered and the residual moisture is removed. The dewatering step is performed under an inert gas blanket by introducing pressurized helium in the MPC cavity space. Subsequent to the dewatering evolution wherein the bulk of the water in the MPC is displaced by helium the removal of the remaining moisture is performed either by introducing near vacuum conditions within the MPC or by recirculating dry pressurized helium through the MPC cavity. Under vacuum drying, the pressure inside the MPC cavity is gradually lowered using a vacuum pump. The fuel decay heat gradually raises the temperature of the MPC contents, which accelerates the drying process. The drying step is followed by backfilling the cavity space with pressurized helium. To determine the peak cladding temperature during the vacuum drying evolution, several conservatisms that seek to overstate the computed temperatures are employed in the thermal modeling. Some of the major assumptions are:*

1. *Radiation heat dissipation to ambient is understated (Transfer Cask surfaces are assumed unpainted).*

2. *Heat dissipation in the MPC-to-Transfer Cask annular gap through convection is ignored.*

3. *Heat dissipation in the water jacket space through convection is ignored.*

4. *Design maximum cask heat load (Q = 17.4 kW) is used.*

5. *A bounding low MPC cavity pressure (P = 2 torr) is assumed to exist throughout the vacuum drying operation.*

As discussed below, to ensure that the computed temperatures are not grossly overstated, the FLUENT thermal model is appropriately enhanced to eliminate certain overly conservative elements. These are discussed below.

4.7.5.2.1 MPC In-Plane Resistance

The MPC is rendered as a two-zone axi-symmetric thermal model. An inner zone represents the heat generating fuel basket region. The outer zone is an annular helium-filled region to model the MPC downcomer space. The width of the annular region, sized from hydraulic considerations, overstates the annular gap for conduction heat transfer. Consequently, the in-plane MPC thermal resistance, which is the resultant of fuel basket and downcomer gap resistances, is substantially overstated in the thermal model. The excessive conservatism is ameliorated in the vacuum drying condition by analytically adjusting the inner zone effective conductivity.

4.7.5.2.2 Helium Conductivity Under Near Vacuum Conditions

The thermal conductivity of gases is a very weak function of the concomitant pressure. The conductivity decrease in the low to moderate pressure range is negligible and quite moderate in the ultra low pressure range. In the low to moderate pressure range (10^{-3} bar to 10 bar) (Reference 19), the thermal conductivity drops by about 1 percent for a drop in pressure of 1 bar. Below 10^{-3} bar, conductivity drops in proportion to pressure reduction down to zero. For example, conductivity at 0.5×10^{-3} bar is half the value at 10^{-3} bar. This region is denoted in the technical literature as the Knudsen domain. This domain is approached from above in the vacuum drying operation wherein the pressure is gradually reduced from approximately 760 torr down to just below 3 torr for 30 minutes to verify dryness. For the vacuum calculation, a lowerbound pressure of 2 torr is selected. Employing helium conductivity data at 1 atmosphere pressure (760 torr), the conductivity drop at 2 torr is about 1 percent. For a conservatively bounding evaluation, a 5 percent reduction in helium conductivity is employed in the FLUENT models.

4.7.5.2.3 Cask Heat Losses to Ambient

In this evaluation, heat losses from cask to ambient via natural convection and radiation heat transfer are included. The thermal modeling assumes a Transfer Cask with no credit for increased radiation heat dissipation due to coatings. The ambient temperature is postulated at the normal temperature of 75°F (Table 4.2-12).

Employing the assumptions above at the design maximum heat load of 17.4 kW, a transient thermal model was generated and a 75-hour time-dependent rise in the PCT computed. The start of the transient postulates an MPC with its cavity water heated to normal boiling point followed by an instantaneous dewatering step. A transient PCT plot is shown in Figure 4.7-12.

The analysis shows that the fuel cladding remains below 520 °F for typical vacuum durations lasting for about 24 hours or less. Several days of vacuum drying is necessary to approach the asymptotic steady state temperature of 659°F.

The above results are applicable for a hypothetical bounding heat load (referred to as the design maximum heat load) of 17.4 kW. In reality, at the time of fuel loadings (circa 2002), the cask heat loads will be well below 15 kW. A reanalysis of the vacuum drying condition under a heat of 15 kW is provided as a transient PCT temperature profile shown in Figure 4.7-13. The steady state PCT is closely approached after several days of vacuum drying operation. The asymptotic steady state PCT (rounded to a whole number) is computed as 610°F.

4.8 MATERIALS

NRC ISG-15 (Reference 18) provides specific guidance for the review of materials selected for dry cask storage systems. Regulatory requirements and review acceptance criteria are presented in Sections X.3 and X.4, respectively, of ISG-15. While there are a large number of requirements and criteria presented, they can be grouped into ten major categories, as follows:

1. *Adequate Description – Structures, systems and components (SSCs) that are important to safety and the materials from which they are constructed must be described in sufficient detail to permit adequate review. [ISG-15 Sections X.3.1.a, X.3.2.d and X.4.1]*

2. *Quality Standards – SSCs important to safety must be designed, built, and tested to quality standards adequate for the safety function performed by the SSC. [ISG-15 Section X.3.2.a]*

3. *Design Life – The cask design and the materials from which it is constructed must be designed to safely store spent fuel and permit required maintenance for the entire 20-year license period. [ISG-15 Sections X.3.2.e and X.4.2]*

4. *Environmental Compatibility – The cask design and the materials from which it is constructed (including coatings) must be compatible with all expected environmental conditions, including wet and dry loading and unloading facilities. Adverse chemical or corrosion reactions that would impact safe operation must be avoided. [ISG-15 Sections X.3.1.b, X.3.2.c, X.3.3 and X.4.1 through X.4.4]*

5. *Cladding Integrity – Spent fuel cladding must be protected, under both normal and upset conditions, from temperatures and environments that could cause degradation leading to cladding rupture. [ISG-15 Sections X.3.4.a and X.4.4]*

6. *Fire Protection – Noncombustible and heat resistant materials shall be used wherever possible. [ISG-15 Sections X.3.2.f, X.4.3 and X.4.4]*

7. *Nuclear Control – Materials used for shielding and criticality functions must be appropriately selected to perform the function adequately and without susceptibility to slumping or other loss of effectiveness. [ISG-15 Sections X.3.2.b and X.4.2]*

8. *Confinement Boundary – Confinement of radioactive materials must be maintained under all normal and upset conditions. [ISG-15 Section X.3.2.g]*

9. *Offsite Shipment – The cask system must be designed to allow spent fuel to be transported off site for eventual delivery to a DOE repository.*

10. *Operating Conditions – Materials used to construct the cask must maintain acceptable physical and mechanical properties over all operating conditions, including temperature extremes. [ISG-15 Sections X.4.2 and X.4.4]*

Each of these ten categories from ISG-15 has been evaluated for the MPC and the Transfer Cask and is discussed below.

Adequate Description

This category requires that those components of the cask system that are important to safety are identified appropriately and that complete and accurate descriptions of those components be provided. Section 3.3.3.1 of this SAR identifies equipment and components that are designated as important to safety. Chapters 1 and 3 of this SAR provide descriptions of the identified important to safety components and equipment.

Quality Standards

This category requires ensuring that appropriate governing codes be selected for SSCs important to safety. The MPC fuel basket is constructed in accordance with Section III, Subsection NG of the ASME Code. The MPC confinement boundary is constructed in accordance with Section III, Subsection NB, of the ASME Code. The Transfer Cask is designed and fabricated in accordance with Section III, Subsection NF, of the ASME Code. The Transfer Cask lifting trunnions are constructed in accordance with the applicable guidance of NUREG-0612 and ANSI N14.6. The governing design code/standard for the Concrete Cask is ACI-349/ANSI N57.9 and construction is in accordance with ACI-318. The Process Can Capsule is constructed using the guidance of ASME Section III, Subsection NG, and the Failed Fuel Can is constructed to ASME Section III, Subsection NG. Deviations from the ASME Code requirements for these components are listed in Tables 4.2-1a and 4.2-2a.

Design Life

This category requires that the design life of the cask system be specified and be at least 20 years in duration. The design life of the cask system is 40 years, as specified in Section 3.3.7.1.

Environmental Compatibility

This category requires that reactions between cask system materials and the environment be avoided, including reactions with the Spent Fuel Pool water and corrosion reactions. The MPC is constructed entirely of austenitic stainless steel and Boral (boron carbide and aluminum). The

Boral is passivated prior to use, and any continuing passivation reactions will not result in significant hydrogen production. There are no coatings of any kind in the MPC. The Transfer Cask is constructed from the following materials: carbon steels; elemental lead; Holtite-A neutron shield material; paint; and brass, bronze or stainless steel appurtenances (pressure relief valves, drain tube, etc.). Exposed surfaces of the Transfer Cask are coated with an epoxy-based coating material that has been assessed and demonstrated not to react with the Spent Fuel Pool water.

Cladding Integrity

This category requires that appropriate fuel cladding temperature limits be determined and met and that the fuel cladding be protected from exposure to reacting environments. Section 4.2.6.1 of this SAR describes the determination of allowable fuel cladding temperature limits and provides values for the limits. The normal condition limits ensure a probability of cladding breach of less than 0.5 percent over the 40-year design life and the short-term accident cladding temperature limit is in accordance with NRC guidance. Section 4.2.6.2 of this SAR describes that the MPC cavity is backfilled with helium, an inert gas, eliminating any reacting environment within the canister.

Fire Protection

This category requires using only materials that will not ignite when exposed to heat or flame. The Failed Fuel Can, Process Can Capsule, and a significant portion of the MPC are austentic stainless steel. That portion of the MPC that is not stainless steel is passivated Boral (boron carbide and aluminum). The Transfer Cask is constructed from the following materials: carbon steels; elemental lead; Holtite-A neutron shield material; paint; and brass, bronze or stainless steel appurtenances (pressure relief valves, drain tube, etc.). None of these materials is known to ignite when exposed to heat or flame.

Nuclear Control

This category requires the use of materials with known radiation shielding and criticality control performance. Materials used for criticality control in the MPC are the Boral panels affixed to the walls of the fuel cells. Boral has been used successfully for many years in wet storage applications and, more recently, in dry storage service, in the nuclear industry. Shielding in the Transfer Cask is provided primarily by lead, steel and water, all of which are commonly used in nuclear applications. A small amount of Holtite-A neutron shield material is used in the lid of the Transfer Cask. A detailed description of Holtite-A may be found in Section 1.2.1.3.2 of the HI-STORM 100 System FSAR.

Confinement Boundary

This category requires demonstrating that the MPC confinement boundary and fuel cladding operating limits (i.e., stresses and temperatures) are not exceeded. The structural and thermal analyses discussed elsewhere in this SAR provide this information.

Offsite Shipment

This category requires that the cask system or, in the case of canister-based systems, the MPC be designed for transportation. The MPC is certified for transportation under 10 CFR 71 in the Holtec HI-STAR 100 Transport Cask.

Operating Conditions

This category requires that all materials must be evaluated under all conditions that are reasonably expected to occur during the design life of the cask system. The structural, thermal, criticality and shielding calculations presented in this SAR have evaluated the performance of the cask system materials under bounding conditions of storage and onsite handling including temperature extremes, drops and tipover, tornadoes, floods, lightning, and explosions. All such evaluations have demonstrated the continued performance of the cask system materials.

~~4.8~~*4.9* REFERENCES

1. ~~"Safety Analysis Report for the TranStor™ Part 71 Shipping Cask System," BNFL Fuel Solutions, Revision A, February 1999.~~*Deleted*

2. E. R. Gilbert et al., "Control of Degradation of Spent LWR Fuel During Dry Storage in an Inert Atmosphere," PNL-6364, Pacific Northwest Laboratory, Richland, WA (1987).

3. J. M. Creer et al., "The TN-24P PWR Spent Fuel Storage Cask: Testing and Analysis," EPRI-NP-5128, Electric Power Research Institute, Palo Alto, CA (1987).

4. J. M. Creer et al., "BWR Spent ~~f~~*F*uel Storage ~~c~~*C*ask Performance Test," PNL-577, Pacific Northwest Laboratory, Richland, WA (1986).

5. J.M. Creer et al., "The Castor V/21 PWR Spent Fuel Storage Cask: Testing and Analyses," EPRI NP-4887, Electric Power Research Institute, Palo Alto, CA (1986).

6. J. M. Creer et al, "The MC-10 PWR Spent Fuel Storage Cask: Testing and Analysis," EPRI NP-5268, Electric Power Research Institute, Palo Alto, CA (1987).

7. R. A. McCann, "Comparison of HYDRA Predictions to Temperature Data From Two Single-Assembly Spent Fuel Heat Transfer Test," PNL-6074, Pacific Northwest Laboratory, Richland, WA (1986).

8. Sierra Nuclear Corporation, "Safety Analysis Report for the Ventilated Storage Cask System," PSN-91-001, Revision 0A, December 1993.

9. *Briesmeister, J. F., Ed., "MCNP - A General Monte Carlo N-Particle Transport Code, Version 4A," Los Alamos National Laboratory, LA-12625-M (1993).* ~~"SCALE-PC Modular Code System for Performing Criticality Safety Analysis for Licensing Evaluation, Version 4.1," Oak Ridge National Laboratory; CCC-619.~~

10. R. J. Roark, Formulas for Stress and Strain, McGraw-Hill Book Co., New York, NY, *Sixth Edition* (~~1965~~*1989*).

11. Bechtel Power Corporation letter to PGE, Document Control No. T040898, dated March 4, 1996, titled~~,~~ "Concrete Cask Temperature Review, GSA #618"

12. *Rohsenow, W. M., and Hartnett, J. P., "Handbook of Heat Transfer," McGraw Hill Book Co., New York (1973)*

13. *ASME Boiler and Pressure Vessel Code, Section II, Part D, "Materials Properties," 1995 including Addenda through 1997*

14. *ASME Steam Tables, 3rd Edition, 1977*

15. *Kern, D. Q., "Process Heat Transfer," McGraw Hill (1950)*

16. *Holtec International, "Topical Report on the HI-STAR/HI-STORM Thermal Model and its Benchmarking with Full-Size Cask Test Data," Report HI-992252, Rev. 1*

17. *Holtec International, HI-STAR 100 Cask System FSAR, Report HI-2012610, Rev. 0, March 2001.*

18. *USNRC Interim Staff Guidance ISG-15, "Materials Evaluation," January 2001.*

19. *Reid, R. C., Prausnitz, J. M., and Poling, B. E., "The Properties of Gases & Liquids," McGraw-Hill Book Co., 4th Edition, (Page 514)*

20. *NUREG-1536, "Standard Review Plan for Dry Cask Storage Systems," January 1997.*

21. *Johnson, A. B., and Gilbert, E. R., "Technical Basis for Storage of Zircaloy-Clad Spent Fuel in Inert Gases," PNL-4835, September 1983.*

Table 4.2-1

Fabrication Specification Summary
~~PWR Basket and Basket Overpack~~*Multi-Purpose Canister (MPC)*

MATERIALS

Material in accordance with design drawings. References to ASME Section III are ~~1992~~ *1995* including Addenda through ~~1994~~*1997*.

FABRICATION[1]

Fabrication inspection in accordance with design drawings.
Cutting, welding, and forming for the confinement boundary in accordance with ASME, Section III, ~~NG-4000~~*NB-4000*. Stamping is not required.
Cutting, welding, and forming for the ~~PWR Basket~~*MPC* ~~internals~~ *fuel basket* in accordance with ASME, Section III, NG-4000. Stamping is not required.
Filler metals are ASME, Section II material.
Welders and welding operators are qualified in accordance with ASME Section IX.[2]
Welding procedures are written and qualified in accordance with ASME Section IX.[2]
Visual examinations of welds as specified in ASME, Section V, Article 9, with acceptance criteria per ASME Section III, ~~NG-5361~~*NF-5360* and ~~NG-5362(b)(1)~~*NG-5360, as clarified on the design drawings.*
Welds are liquid penetrant ~~or magnetic particle~~ examined in accordance with the requirements of ASME Section V, Article 6 ~~or Article 7, respectively~~. Acceptance criteria ~~for liquid penetrant~~ per ASME Section III, ~~NG-5300 (1992)~~*NB-5350 and NG-5350, as clarified on the design drawings.*
Welds to be radiographed examined in accordance with the requirements of ASME Section V, Article 2 with acceptance criteria from ASME Section III, ~~NG-5300~~*NB-5320*.
Personnel performing examinations qualified in accordance with the quality assurance program, and SNT-TC-1A (~~1984~~ *1992* Edition).
Surfaces cleaned to surface classification C or better as defined in ANSI N45.2.1, Section 2.
Hydrostatic Testing to ASME Section III, ~~NG-6221~~*NB-6000*.
Helium Leak Testing ~~per ANSI N14.5, "American National Standard for Radioactive Materials-Leakage Tests for Packages for Shipment"~~*in accordance with ANSI N14.5.*

PACKAGING AND SHIPPING

Packaging and shipping are in accordance with ANSI N45.2.2.

QUALITY ASSURANCE

The ~~PWR Basket~~*MPC* is fabricated under a quality assurance program that meets the applicable requirements of 10 CFR 72 Subpart G

[1]Deviations from specified code and justification are provided in Table 4.2-1a.

[2]Requirements are specified in ASME Section III

Table 4.2-1a
ASME Code Deviations

Section	Requirement	Exception
Subsection NCA *NB-1100* *NB-2000*	Miscellaneous administrative requirements.	No Design Specification or Design Report will be required. Manufacturer will not be required to have a Certificate of Authorization or an NCA-4000 Quality Assurance Program. Material Organizations will not be required to have an NCA-3800 Quality Assurance Program. Authorized Inspection will not be required. Code Data Reports and Code Symbol/Stamps will not be required. *Materials will be supplied by Holtec-approved suppliers with Certified Material Test Reports (CMTRs) in accordance with NB-2000 requirements.*
~~NC-3211.1~~ ~~NC-3254~~ ~~NC-4267~~	~~Welding configuration requirements allowed in vessels designed per the requirements of NC-3200.~~	~~Structural attachment welds are permitted to be attached by welds that are not continuous on all sides. These attachments do not serve a pressure retaining function, and, when fuel is loaded, are subject only to accident loads. Cyclic loading, stress ratchet, and fatigue are not credible events. Detailed drop analysis includes actual weld configuration and potential load transfer to the pressure retaining boundary.~~
~~NC-3252~~ ~~NC-5253~~	~~Category C welded joints for vessels designed to NC-3200~~	~~Subsection NC requires Category C full-penetration corner welded joints to be examined by the radiographic or ultrasonic method. Because of the difficulty of performing a meaningful examination (due to the attenuation of UT signals by austenic stainless steel weld metal and a joint geometry that complicates UT interpretation), and the inherent cracking resistance of these materials, the Category C structural lid closure weld will not be nondestructively examined in accordance with NC-2553. This weld will be examined by the liquid penetrant method (multi-layer procedure that includes the root and final layers and sufficient intermediate layers to detect critical flaws). In addition, the partial penetration weld between the shield lid and the shell will be examined by the liquid penetrant method (as required by NC-5260) and will be helium leak tested, ensuring a leak-tight boundary.~~
~~NC-3258~~	~~Design of head attachments using corner joints~~	~~When the head-to-shell weld is a corner joint, NC-3258.3 requires the through-thickness dimension of the weld to exceed the thinner of the head or shell thickness by an amount that varies with the specific joint design. Due to the geometry of the internals and due to lack of access to the inside surface of the structural lid closure weld, the shell-to-bottom-plate weld and the structural-lid-to-shell closure weld do not have the required ¼ in. fillet weld or other weld reinforcement on the ID surface.~~

Table 4.2-1a
ASME Code Deviations

Section	Requirement	Exception
NB-4243	*Full penetration welds required for Category C Joints (flat head to main shell per NB-3352.3)*	*The MPC lid-to-shell weld and the welds joining the MPC closure ring to the MPC lid (I.D.) and the MPC shell (O.D.) are not full penetration welds due to their configuration. These joints are welded independently to provided a redundant seal. Additionally, a weld efficiency factor of 0.45 has been applied to the analyses of these welds.*
NB-5230 (RT) *NB-5331 (UT)*	*Radiographic (RT) or Ultrasonic (UT) examination required.*	*1. The MPC closure ring welds and the MPC vent and drain port cover plate welds are not RT or UT examined due to their configuration. Root and final weld passes are liquid penetrant (PT) examined in accordance with NB-5245. The MPC lid weld and the vent and drain port cover plate welds are leak tested. The closure ring provides independent, redundant closure for the vent and drain port cover plates.* *2. The MPC lid-to-shell weld is not RT examined due to its configuration. Examination must be by the UT or PT method. PT examination will be used, and at a minimum it shall include the root and final weld layers and each approximately 3/8 inch of weld depth.*
~~NC-6000~~ *NB-6000*	Hydrostatic pressure test	The vessel shell will not be hydrostatically tested in accordance with the code since vessel side walls and bottom are not accessible for inspection. Structural welds will be volumetrically examined, except the ~~structural~~ *MPC* lid-*to-shell* weld. *The MPC lid-to-shell weld, the MPC closure ring welds, and the MPC vent and drain port cover plate welds*~~, which~~ will be examined ~~by the liquid penetrant method~~*as described on the design drawings and other Code exceptions.* The ~~partial penetration shield lid weld will~~*MPC vessel is seal welded in the field following fuel assembly loading and shall* be hydrostatically tested~~, helium leak tested and liquid penetrant tested~~ *after the MPC lid-to-shell weld is complete.*
NB-7000	*Vessels are required to have overpressure protection*	*No overpressure protection is provided for the MPC. The function of the MPC is to confine the radioactive contents under all normal, off-normal, and accident conditions of storage. The MPC vessel is designed to withstand the maximum internal pressure considering 100 percent fuel rod failure and maximum accident temperatures.*

Table 4.2-1a
ASME Code Deviations

Section	Requirement	Exception
NB-8000 *NG-8000*	*States requirements for nameplates, stamping, and reports per NCA-8000*	*The Trojan Cask System is to be marked and identified in accordance with 10 CFR 71 and 10 CFR 72 requirements, as applicable. Code stamping is not required. QA data package to be in accordance with Holtec QA program.*
~~NG-2121~~ *NG-2000*	Material utilized in fabrication shall conform to the requirements of the specification for material given in Tables 2A, 2B, and 4 of Section II, Part D, Subpart 1 and all special requirements of NG.	Not all ~~PWR Basket~~*MPC* materials will be selected from materials permitted for use in Section III core support structures. Appropriate material properties will be determined from available technical literature. The primary function is structural, and appropriate structural materials will be selected. *Materials will be supplied by a Holtec-approved supplier with CMTRs in accordance with NG-2000 requirements.*
NG-4427(a)	*A fillet weld in any single continuous weld may be less than the specified fillet weld dimension by not more than 1/16 inch, provided that the total undersize portion of the weld does not exceed 10 percent of the length of the weld. Individual undersize weld portions shall not exceed 2 inches in length.*	*Replace the Code requirement with the following: For the longitudinal MPC basket fillet welds, the following criteria apply: 1) The minimum throat dimension must be maintained over at least 92 percent of the total weld length. All regions of sub-sized weld must be less than 3 inches long and separated from each other by at least 9 inches. 2) Areas of undercuts and porosity beyond that allowed by the applicable ASME Code shall not exceed 1/2 inch in weld length, except that cracks shall be evaluated in accordance with the applicable ASME Code. The total length of imperfections over any 1-foot length shall not exceed 2 inches. 3) The weld length in which items (1) and (2) apply shall not exceed a total of 10 percent of the overall weld length. The subject welds are located over the full length of the MPC basket. The Code criteria are intended for the construction of operating reactor core support structures. The MPC basket is subject to much less severe service than a reactor core support structure. The location of the MPC basket welds makes it impractical to measure the depth of weld defects. Considering the large structural margins in the MPC basket design, these alternate inspection criteria are adequate to ensure the as-built welds are adequate.*

Table 4.2-2
Concrete Cask Fabrication Summary[1]

MATERIALS

- Concrete mix in accordance with requirements of ACI 318.
- Type II Portland Cement, ASTM C150.
- Fine aggregate ASTM C33.
  - Thermal expansion coefficient of 6.0×10^{-6} in/in-°F or less
  - Composed of sand of the following minerals:
    - limestone, dolomite, marble, basalt, granite, gabbro, and/or rhyolite.
- Coarse aggregate ASTM C33.
  - Thermal expansion coefficient of 6.0×10^{-6} in/in-°F or less
  - Composed of the following minerals:
    - limestone, dolomite, marble, basalt, granite, gabbro, and/or rhyolite.
- Minimum bulk specific gravity of 2.60
- Shall not exceed 1.5 in. nominal size and the amount of flat and elongated particles shall be less than 15% by weight

Admixtures:

- Water Reducing ASTM C494.
- Pozzolanic Admixture ASTM C618.
- Air Entraining ASTM C260

Compressive Strength 4000 psi.
Air Entrainment: 3% - 6%
Steel components are ASTM A-36
Reinforcement are ASTM A-615

WELDING

- Visual inspection of girth and longitudinal welds is performed as specified in ASME, Section III, Subsection NF (1992 including Addendum through 1994)
- Visual inspection of other welds to assure no concrete leakage during pouring.

CONSTRUCTION

Strength tests are performed for each truckload of concrete

- Test specimens are cured per ASTM C31 and tested in accordance with ASTM C39.
- Formwork in accordance with ACI 318.
- Grade, type, and details of reinforcing steel in accordance with the referenced drawings.
- Embedded items conform with ACI 301 and the referenced drawings.
- The placement of concrete in accordance with ACI 318 and ACI-301
- Surface finish in accordance with ACI 301.

QUALITY ASSURANCE

Construction shall be under a quality assurance program that meets the applicable requirements of 10 CFR 72 Subpart G.

---

[1] Deviations are from ACI-349. Justification is provided in Table 4.2-2a.

Table 4.2-2a

Concrete Cask Code Deviations[1]

Code Section No.	Requirement	Exception/Justification
1.2	Specifies how drawings and calculations must be handled.	The loads used in the design are covered in the calculations rather than the drawings and specifications.
4.1.4	*Design drawings shall show specified compressive strength of concrete*	*Design drawings refer to design specification SP-001 for compressive strength. Justification is that design compressive strength is 4000 psi for all concrete used in Concrete Cask fabrication.*
4.5.1 and ACI-318, 4.2.1	*Air content for frost resistant concrete, for moderate exposure and 1-1/2-inch aggregate, is 4.5±1.5 percent (Reference Chart 4.5.1).*	*Two concrete batches had actual air content below 3.0 percent (2.6 and 2.9 percent). Justification is based on compressive strength exhibited in 28-day break. Specifically, the batch with 2.6 percent air (Batch No. 493526) had break test results of 7,880 and 7,830 psi. The batch with 2.9 percent air (Batch No. 492942) had break test results of 7,130 and 7,170 psi. These test results are consistent with high strength concrete (i.e., greater than 5,000 psi), for which the Code allows a 1 percent reduction in air content.*
A.4	The limits for bulk, (150°F) & local area (200°) concrete temperature.	A long term temperature limitation of 225°F is used. This increased limit is based on test data from several research efforts which show that concrete of similar composition to that used in the casks does not suffer loss of strength when exposed to temperatures up to 350°F.

[1] Deviations are from ACI-349 *except where indicated otherwise.*

Table 4.2-3

Conformity to Requirements

Requirement	Requirement Summary	Basis for Conformance
10 CFR 72.122(a) Quality Standards	Structures , systems, and components important to safety must be designed tested and fabricated to quality standards commensurate with their function	Quality assurance program in accordance with 10 CFR 72.104(d) implemented for ISFSI activities. Refer to SAR Chapter 11.
10 CFR 72.122(b) Protection Against Environmental Conditions and Natural Phenomena	Structures , systems, and components important to safety must be designed to accommodate the effects of and be compatible with site characteristics and to withstand postulated accidents	SAR Chapter 2 describes the site characteristics and defines credible environmental conditions. SAR Chapter 8 provides analysis to demonstrate design conformance.
OAR 345-26-390(4)(b)	The ISFSI shall be designed such that in the event of a Seismic Margin Earthquake, anticipated damage to spent nuclear fuel or containers will not preclude acceptance at federally licensed disposal facility.	SAR Section 8.2.5.2 demonstrates that Seismic Margin Earthquake does not result in damage to storage system
10 CFR 72.122(c) Protection Against Fire and Explosions	Structures , systems, and components important to safety must be designed and located so that they can continue to perform their safety function under credible fires and explosion exposure conditions	SAR Section 8.2.9 discusses impact of fire on the ISFSI, Section 8.2.14 discusses explosions
10 CFR 72.122(d) Sharing of Structures and Components	Structures , systems, and components important to safety must not be shared between the ISFSI or other facilities unless it is shown that such sharing will not impair the capability of either facility to perform its safety function.	The ISFSI is designed for stand alone operations and does not rely on other facilities to support performance of its safety function. The ISFSI does not share its facilities with any other facility.

Table 4.2-3

Conformity to Requirements

Requirement	Requirement Summary	Basis for Conformance
10 CFR 72.122(e) Proximity of Sites	An ISFSI located near other nuclear facilities must be designed and operated to ensure that the cumulative effects of their combined operations will not constitute an unreasonable risk to health and safety of the public.	The Environmental Report, Chapter 5 discusses the impact of ISFSI operation on the environment. The Environmental Report concluded that ISFSI operations have no significant impact on the environment.
10 CFR 72.122(f) Testing and Maintenance of Systems and Components	Systems, and components important to safety must be designed to permit inspection, maintenance, and testing.	ISFSI structures-, systems, and components important to safety are designed to minimize the need for testing. System performance monitoring is provided by temperature monitoring of the air outlet. Surveillances to ensure proper operations are provided in the Technical Specifications.
10 CFR 72.122(g) Emergency Capability	Structures, systems, and components important to safety must be designed for emergencies. The design must provide for accessibility to the equipment of on-site and available offsite emergency facilities and services.	Access to off-site emergency facilities and services such as hospitals, fire and police departments, ambulance services, and other emergency agencies is discussed in the Emergency Plan.
10 CFR 72.122(h) Confinement Barriers and Systems	The spent fuel cladding must be protected during storage against degradation that leads to gross ruptures or the fuel must be otherwise confined.	Section 4.2.3 discusses the confinement boundaries. The ~~PWR Basket~~*MPC* shell provides the confinement barrier even in the event of gross rupture of fuel clad. For the range of design basis accidents presented in Chapter 8 there is no loss of confinement boundary.
10 CFR 72.122(i) Instrumentation and Control Systems	Instrumentation and controls systems must be provided to monitor systems that are important to safety over anticipated ranges for normal and off-normal operation	The Trojan ISFSI is passive by design and requires no controls for operation. Storage system monitoring will be performed using measuring and test equipment calibrated in accordance with the Quality Assurance program.

Table 4.2-3

Conformity to Requirements

Requirement	Requirement Summary	Basis for Conformance
10 CFR 72.122(j) Control Room or Control Area	A control room or control area, if appropriate for the ISFSI design, must be designed to permit occupancy and actions to be taken to monitor the ISFSI safely under normal conditions, and to provide safe control under off-normal or accident conditions.	Chapter 5 provides a discussion of ISFSI normal and emergency operations. These operations are monitored and performed at the Storage Pad. There is no requirement for remote monitoring, therefore there is no requirement for a control room or control area.
10 CFR 72.122(k) Utility or Other Services	Requires utility services that are important to safety be provided with redundant capabilities and adequate capacities.	The design of systems, structures and components important to safety does not rely on utility services. Section 4.1.2.3 provides additional discussion.
10 CFR 72.122(l) Retrievability	Storage systems must be designed to allow ready retrieval of spent fuel for further processing or disposal.	Spent nuclear fuel is stored within seal welded closure ~~PWR Baskets~~*MPCs*. The ISFSI is designed to allow retrieval of the ~~PWR Baskets~~*MPCs* and placement into a ~~transportation~~ *Transport* ~~c~~*C*ask. Chapter 5 discusses operations associated with retrieval and shipment of spent nuclear fuel.
10 CFR 72.124 Criteria for Nuclear Criticality Safety	The spent fuel handling, packaging, transfer, and storage systems must be designed to be maintained subcritical and to ensure that, before a nuclear criticality accident is possible, at least two unlikely independent, and concurrent or sequential changes have occurred. When practical the design must be based on favorable geometry or permanently fixed neutron absorbing material, or both.	The ~~PWR Basket~~*MPC* is designed to maintain subcritical conditions for credible accidents. The K_{eff} for the ~~PWR Basket~~*MPC* is based on design geometry and ~~does not~~ credit *for* the neutron absorbing material for *both* the *wet loading and* dry storage conditions. ~~In order to invalidate criticality assumptions, the PWR Basket volume would have to be filled with water. In order for this condition to occur, the ISFSI location would require a flood in excess of the design basis flood scenario coincident with confinement barrier failure. Neither of these conditions are considered credible based on the accident analysis presented in Chapter 8.~~

Table 4.2-3

Conformity to Requirements

Requirement	Requirement Summary	Basis for Conformance
10 CFR 72.126 (a) Exposure Control	Structures, systems and components for which operation, maintenance, and required inspections may involve occupational exposure, must be designed, fabricated, located, shielded, controlled, and tested so as to control internal and external exposure to personnel.	Radioactive materials are confined within a welded steel enclosure. As a result, it is not anticipated that personnel will be exposed to airborne radioactivity. Radiation exposure control is implemented by limiting access to the ISFSI. Access control will be implemented in accordance with radiation control and security procedures. Chapter 7 discusses the potential sources for radiation exposure and the design, procedures and programs utilized to implement ALARA concepts.
10 CFR 72.126(b) Radiological Alarm Systems	Radiological alarm systems must be provided in accessible work areas as appropriate to warn operating personnel of radiation and airborne radioactive concentrations above a setpoint.	Section 7.3.1 of the SAR describes the design features of the installation and equipment that ensures that personnel exposure to radiation is ALARA. Section 7.3.4 describes the radioactive monitoring instrumentation.
10 CFR 72.126(c) Effluent and Direct Radiation Monitoring	As appropriate, effluent systems must be provided with means for measuring the amount of radionuclides in effluents. Areas containing radioactive materials must be provided with systems for measuring direct radiation.	The confinement features of the Trojan ISFSI storage system are such that radioactive releases are not expected, thus, effluent radiation monitoring systems are not required. Direct radiation monitoring consists of thermoluminescent detectors (TLDs) posted at the perimeter of and in the Controlled Area near the Concrete Casks. Radiation protection equipment, instrumentation, and facilities are discussed in Section 7.5.2 of the ISFSI SAR.
10 CFR 72.126(d) Effluent Control	The ISFSI must be designed to provide a means to limit to levels as low as reasonably achievable.	The ISFSI is designed to ensure confinement of stored radioactive materials. The confinement design features are discussed in Section 4.2.3 of the SAR. There is no anticipated release of radioactive material during normal operations. The potential effects of postulated ~~PWR Basket~~*MPC* leakage are evaluated in Sections 8.1.4 *and 8.2.1.*

Table 4.2-3

Conformity to Requirements

Requirement	Requirement Summary	Basis for Conformance
10 CFR 72.128(a) Spent Fuel Storage and Handling Systems	Spent fuel storage and other systems that might contain or handle radioactive materials must be designed to ensure adequate safety under normal and accident conditions.	The ISFSI is designed to provide confinement of spent nuclear fuel and related radioactive material for the spectrum of operating conditions and accidents.
10 CFR 72.128(b) Waste Treatment	Radioactive waste treatment facilities must be provided. Provisions must be made for the packing of site-generated low-level wastes in a form suitable for storage onsite awaiting transfer to disposal sites.	Generation of radioactive waste is not anticipated at the ISFSI. Radioactive material stored at the facility is contained within welded enclosures. Site-generated waste confinement is discussed in Chapter 6 of the SAR. Since there is no anticipated generation of radioactive waste, a waste treatment facility has not been included in the design.
10 CFR 72.130 Criteria for Decommissioning	The ISFSI must be designed for decommissioning.	Decommissioning activities consist primarily of transferring the ~~PWR Baskets~~*MPCs* for permanent off-site disposal or storage. The storage system has been designed to minimize contamination of the Concrete Cask exterior during loading and unloading operations. No contamination is expected on the Concrete Cask and because of low neutron flux levels activation of the concrete and steel is considered insignificant.
OAR 345-26-0390(4)(j) Design Life	The ISFSI must have a minimum design life of 40 years.	The ISFSI is designed for 40 year life.

Table 4.2-4

Nominal Weights and Centers of Gravity[1]

Item/Configuration	Nominal Weight	Center of Gravity
~~PWR Basket~~*MPC*		
Empty (without lid~~s~~)	~~26,400~~*30,400*	~~80.9~~*80.0*
Loaded Wet~~-~~ (Fuel, Inserts, water, and ~~shield~~ lid)	~~86,000~~ *93,400*	~~91.8~~*93.4*
Loaded Dry (Fuel, Inserts, ~~shield and structural~~ lid, *and lid closure ring*)	~~75,300~~ *78,700*	~~96.1~~*94.0*
~~Structural~~ Lid	~~2,700~~ *9,790*	--
~~Shield Lid~~	~~7,400~~	--
~~Basket Overpack~~		
~~Empty (without lid)~~	~~6,600~~	~~77.8~~
~~Structural Lid~~	~~1,000~~	--
Transfer Cask		
Empty (no lid)	~~120,000~~ *109,000*	~~85.1~~*85.9*
Empty (with lid)	~~121,000~~ *111,500*	~~85.6~~*88.2*
Empty (with lid and water jacket filled)	*119,100*	*88.5*
Lid	~~400~~*2,500*	--
With ~~PWR Basket~~*MPC* (empty without lid~~s~~)	~~147,000~~ *139,400*	~~86.6~~*86.5*
With ~~PWR Basket~~*MPC* (loaded wet with ~~shield~~ lid, *water jacket empty*)	~~207,000~~ *204,900*	~~92.6~~*94.6*

~~[1] Table reflects nominal weights and centers of gravity based on current design calculations. Some earlier design calculations used slightly different values. The differences are small and do not impact the conclusions reached.~~

Table 4.2-4

Nominal Weights and Centers of Gravity[1]

Item/Configuration	Nominal Weight	Center of Gravity
With ~~PWR Basket~~*MPC* (loaded dry with lid~~s~~, *water jacket filled*)	~~196,000~~ *197,800*	~~93.7~~*94.3*
Concrete Cask		
Empty (without lid and shield ring)	212,000	103.8
Empty (with lid and shield ring)	214,000	105.0
With ~~PWR Basket~~*MPC* (loaded dry)	~~290,000~~ *292,700*	~~108.4~~*107.8*
~~With PWR Basket and Basket Overpack~~	~~297,000~~	~~108.8~~
Lid	1,200	--
Shield Ring	1,200	--

~~[1] Table reflects nominal weights and centers of gravity based on current design calculations. Some earlier design calculations used slightly different values. The differences are small and do not impact the conclusions reached.~~

Table 4.2-5

Mechanical Properties of Steels Used in the Storage System

Material Specification	Type or Grade	Temp (°F)	Yield S_y (ksi)	Ultimate S_u (ksi)	Allowable S_m (ksi)	Elastic Modulus[1] (10^6 psi)	Coefficient of Thermal Expansion[2] (10^{-6}in/in°F)
ASME SA-516	70	70	38.0[3]	70.0[4]	23.3[5]	29.5	---
		100	38.0[3]	70.0[4]	23.3[5]	---	5.53
		200	34.6[3]	70.0[4]	23.1[5]	28.8	5.89
		300	33.7[3]	70.0[4]	22.5[5]	28.3	6.26
		400	32.6[3]	70.0[4]	21.7[5]	27.7	6.61
		500	30.7[3]	70.0[4]	20.5[5]	27.3	6.91
		600	28.1[3]	70.0[4]	18.7[5]	26.7	7.17
		700	27.4[3]	70.0[4]	18.3[5]	25.5	7.41
ASME A-350	LF2	70	36[3]	70.0[4]	23.3[5]	29.5	--
		200	32.9[3]	70.0[4]	21.9[5]	28.8	5.89
		300	31.9[3]	70.0[4]	21.3[5]	28.3	6.26
		400	30.9[3]	70.0[4]	20.6[5]	27.7	6.61
		~~400~~	~~30.9[3]~~	~~70.0[4]~~	~~20.6[5]~~	~~27.7~~	~~6.61~~

[1] ASME, Sec. II, Part D, Subpart 2, Table TM-1

[2] ASME, Sec. II, Part D, Subpart 2, Table TE-1

[3] ASME, Sec. II, Part D, Subpart 1 Table Y-1

[4] ASME, Sec. II, Part D, Subpart 1, Table U

[5] ASME, Sec. II, Part D, Subpart 1, Table 2A

Table 4.2-5 (continued)

Mechanical Properties of Steels Used in the Storage System

Material Specification	Type Or Grade	Temp (°F)	Yield[1] S_y (ksi)	Ultimate[2] S_u (ksi)	Allowable[3] S_m (ksi)	Elastic Modulus[4] (10^6 psi)	Coefficient of Thermal Expansion[5] (10^{-6}in/in°F)
ASME SA-240	304	70	30.0	75.0	20.0	28.3	---
		100	30.0	75.0	20.0	---	8.55
		200	25.0	71.0	20.0	27.6	8.79
		300	22.5	66.0	20.0	27.0	9.00
		400	20.7	64.4	18.7	26.5	9.19
		500	19.4	63.5	17.5	25.8	9.37
		600	18.2	63.5	16.4	25.3	9.53
		700	17.7	63.5	16.0	24.8	9.69
ASME-SA-240	304L	70	25.0	70.0	16.7	Use SA-240 Type 304 data	
		100	25.0	70.0	16.7		
		200	21.3	66.2	16.7		
		300	19.1	60.9	16.7		
		400	17.5	58.5	15.8		
		500	16.3	57.8	14.8		
		600	15.5	57.0	14.0		
		700	14.9	56.2	13.5		

[1] ASME, Sec. II, Part D, Subpart 1, Table Y-1

[2] ASME, Sec. II, Part D, Subpart 1, Table U

[3] ASME, Sec. II, Part D, Subpart 1, Table 2A

[4] ASME, Sec. II, Part D, Subpart 2, Table TM-1

[5] ASME, Sec. II, Part D, Subpart 2, Table TE-1

Table 4.2-5 (continued)

Mechanical Properties of Steels Used in the Storage System

Material Specification	Type or Grade	Temp. (°F)	Yield S_y (ksi)	Ultimate S_u (ksi)	Allowable S_m (ksi)	Elastic Modulus (10^6 psi)	Coefficient of Thermal Expansion (10^{-6}in/in°F)
~~ASTM A-588~~		~~100~~	~~50[1]~~	~~70.0[2]~~	~~23.3[3]~~	~~Use SA-516 Grade 70 data~~	
		~~200~~	~~47.5[1]~~	~~70.0[2]~~	~~23.3[3]~~		
		~~300~~	~~45.6[1]~~	~~70.0[2]~~	~~23.3[3]~~		
		~~400~~	~~43.0[1]~~	~~70.0[2]~~	~~23.3[3]~~		
ASTM A-36		70	36.0[4]1	58.0[5]2	19.3[6]3	Use SA-516 Grade 70 data	
		100	36.0[4]1	58.0[5]2	19.3[6]3		
		200	32.8[4]1	58.0[5]2	19.3[6]3		
		300	31.9[4]1	58.0[5]2	19.3[6]3		
		400	30.8[4]1	58.0[5]2	19.3[6]3		
		500	29.1[4]1	---	19.3[6]3		

~~[1] ASME, Code Case, N-71-15, Table 3~~

~~[2] ASME, Code Case, N-71-15, Table 5~~

~~[3] ASME, Code Case, N-71-15, Table 1~~

[4]1 ASME, Code Case N-71-16, Table 4

[5]2 ASME, Code Case N-71-16, Table 5

[6]3 ASME, Sec. II, Part D. App. 2

Table 4.2-5 (continued)

Mechanical Properties of Steels Used in the Storage System

Material Specification	Type Or Grade	Temp (°F)	Yield[1] S_y (ksi)	Ultimate[2] S_u (ksi)	Allowable[3] S_m (ksi)	Elastic Modulus[4] (10^6 psi)	Coefficient of Thermal Expansion[5] (10^{-6} in/in°F)
ASME SA350	LF3	-120	37.5	70.0	23.3	28.5	6.20
		100	37.5	70.0	23.3	27.6	6.27
		200	34.2	68.5	22.8	27.1	6.54
		300	33.2	66.7	22.2	26.7	6.78
		400	32.2	64.6	21.5	26.1	6.98
		500	30.3	60.7	20.2	25.7	7.16
		600	---	---	18.5	---	---
		700	---	---	16.8	---	---

[1] ASME, Sec. II, Part D, Subpart 1, Table Y-1

[2] Based on ratioing S_m values

[3] ASME, Sec. II, Part D, Subpart 1, Table 2A

[4] ASME, Sec. II, Part D, Subpart 2, Table TM-1

[5] ASME, Sec. II, Part D, Subpart 2, Table TE-1

Table 4.2-5 (continued)

Mechanical Properties of Steels Used in the Storage System

Material Specification	Type Or Grade	Temp (°F)	Yield[1] S_y (ksi)	Ultimate[1,2] S_u (ksi)	Allowable[3] S_m (ksi)	Elastic Modulus[4] (10^6 psi)	Coefficient of Thermal Expansion[5] (10^{-6} in/in°F)
ASME SB637	N07718	-100	150.0	185.0	50.0	29.9	---
		-20	150.0	185.0	50.0	---	---
		70	150.0	185.0	50.0	29.0	7.05
		100	150.0	185.0	50.0	---	7.08
		200	144.0	177.6	48.0	28.3	7.22
		300	140.7	173.5	46.9	27.8	7.33
		400	138.3	170.6	46.1	27.6	7.45
		500	136.8	168.7	45.6	27.1	7.57
		600	135.3	166.9	45.1	26.8	7.67
ASME SA193	B7	<200	105.0	125.0	---	---	---
		200	98.0	116.4	---	---	6.09
		300	94.1	112.1	---	---	6.43
		400	91.5	108.9	---	---	6.74

[1] SA193 B7 Values from ASME, Sec. II, Part D, Subpart 1, Table Y-1. SB637 values based on ratioing S_m values

[2] A193 B7 S_u based on ratioing S_y values

[3] ASME, Sec. II, Part D, Subpart 1, Table 4

[4] ASME, Sec. II, Part D, Subpart 2, Table TM-4

[5] ASME, Sec. II, Part D, Subpart 2, Tables TE-1 and TE-4

Table 4.2-6

Mechanical Properties of Concrete Used in Concrete Cask

Temp. °F	Density (lb/ft^3)	Thermal Conductivity (BTU/hrft°F)	Compressive Strength (psi)	Thermal Expansion (in/in/°F)	Modulus of Elasticity (psi) 40 years
32-400	141	0.719	4,000	6.5×10^{-6}	3.1×10^{6}

Table 4.2-7

Summary of Maximum ~~PWR Basket~~*MPC*
Thermal Stresses (ksi)

Component	Maximum Thermal Stress Q (ksi)
Fuel Basket	*5.61*
Shell	~~14.0~~*39.9*†
~~Bottom Plate~~*Baseplate*	~~15.9~~*21.9*†
~~Structural~~ Lid	~~4.1~~*3.52*†
~~Top Weld~~	~~11.3~~
~~Shield Lid Weld~~	~~17.9~~
~~Sleeve~~	~~15.4~~

† *Maximum stress ($P_L + P_b + Q$) due to combined effect of normal operating internal pressure plus thermal loading.*

Table 4.2-8

Maximum Stress Evaluation
~~PWR Basket and Basket Overpack~~*MPC*

		~~Calculated Value, ksi[a]~~					
~~Component Location~~	~~Stresses~~	~~Dead Weight~~	~~Design Pressure~~	~~Max Thermal~~	~~Normal Handling~~	~~Total~~	~~ASME Service Level A Limit~~
~~Basket Shell~~	~~P_m~~	~~0.1~~	~~0.5~~	~~-~~	~~0.9~~	~~1.5~~	~~15.2~~
	~~$P_L + P_b$~~	~~0.2~~	~~6.9~~	~~-~~	~~1.7~~	~~8.8~~	~~22.7~~
	~~$P + Q$~~	~~0.2~~	~~6.9~~	~~11.0~~	~~1.7~~	~~22.8~~	~~45.5~~
~~Basket Bottom Plate~~	~~P_m~~	~~0.0~~	~~0.2~~	~~-~~	~~1.1~~	~~1.3~~	~~15.2~~
	~~$P_L + P_b$~~	~~0.2~~	~~1.6~~	~~-~~	~~1.2~~	~~6.0~~	~~22.7~~
	~~$P + Q$~~	~~0.2~~	~~1.6~~	~~15.9~~	~~1.2~~	~~21.9~~	~~45.5~~
~~Basket Structural Lid~~	~~P_m~~	~~0.0~~	~~0.0~~	~~-~~	~~0.5~~	~~0.5~~	~~15.2~~
	~~$P_L + P_b$~~	~~0.1~~	~~1.1~~	~~-~~	~~0.6~~	~~2.1~~	~~22.7~~
	~~$P + Q$~~	~~0.1~~	~~1.4~~	~~1.1~~	~~0.6~~	~~6.2~~	~~45.5~~
~~Basket Top Weld[b]~~	~~P_m~~	~~0.1~~	~~0.9~~	~~-~~	~~0.1~~	~~1.1~~	~~12.2~~
	~~$P_L + P_b$~~	~~0.2~~	~~1.2~~	~~-~~	~~1.1~~	~~2.5~~	~~18.2~~
	~~$P + Q$~~	~~0.2~~	~~1.2~~	~~11.3~~	~~1.1~~	~~13.8~~	~~36.4~~
~~Basket Sleeve~~	~~P_m~~	~~0.1~~	~~0.0~~	~~-~~	~~1.3~~	~~1.4~~	~~18.3~~
	~~$P_L + P_b$~~	~~0.1~~	~~0.0~~	~~-~~	~~2.0~~	~~2.1~~	~~27.4~~
	~~$P + Q$~~	~~0.1~~	~~0.0~~	~~15.4~~	~~2.0~~	~~17.5~~	~~51.9~~
~~Basket Shield Lid Support Ring Weld~~	~~P_m~~	~~0.1~~	~~0.0~~	~~-~~	~~0.1~~	~~0.2~~	~~11.4~~
	~~$P_L + P_b$~~	~~0.2~~	~~0.0~~	~~-~~	~~0.2~~	~~0.4~~	~~17.0~~
	~~$P + Q$~~	~~0.2~~	~~0.0~~	~~0.0~~	~~0.2~~	~~0.4~~	~~34.1~~
~~Basket Shield Lid Weld~~	~~P_m~~	~~0.1~~	~~0.7~~	~~-~~	~~0.1~~	~~0.9~~	~~15.2~~
	~~$P_L + P_b$~~	~~0.2~~	~~0.9~~	~~-~~	~~0.2~~	~~1.3~~	~~22.7~~
	~~$P + Q$~~	~~0.2~~	~~0.9~~	~~17.9~~	~~0.2~~	~~19.2~~	~~45.5~~
~~Overpack Shell~~	~~P_m~~	~~0.1~~	~~0.6~~	~~-~~	~~N/A~~	~~0.7~~	~~18.0~~
	~~$P_L + P_b$~~	~~0.2~~	~~1.7~~	~~-~~		~~1.9~~	~~27.0~~
	~~$P + Q$~~	~~0.2~~	~~21.2~~	~~11.0~~		~~35.1~~	~~51~~
~~Overpack Bottom Plate~~	~~P_m~~	~~0.0~~	~~0.3~~	~~-~~	~~N/A~~	~~0.3~~	~~18.0~~
	~~$P_L + P_b$~~	~~0.2~~	~~9.0~~	~~-~~		~~9.2~~	~~27.0~~
	~~$P + Q$~~	~~0.2~~	~~9.0~~	~~15.9~~		~~25.1~~	~~51~~
~~Overpack Structural Lid~~	~~P_m~~	~~0.0~~	~~0.3~~	~~-~~	~~N/A~~	~~0.3~~	~~18.0~~
	~~$P_L + P_b$~~	~~0.1~~	~~9.0~~	~~-~~		~~9.1~~	~~27.0~~
	~~$P + Q$~~	~~0.1~~	~~9.0~~	~~1.1~~		~~13.2~~	~~51~~
~~Overpack Top[b] Weld~~	~~P_m~~	~~0.1~~	~~-~~	~~-~~	~~N/A~~	~~0.1~~	~~11.1~~
	~~$P_L + P_b$~~	~~0.2~~	~~0.3~~	~~-~~		~~0.5~~	~~21.6~~
	~~$P + Q$~~	~~0.2~~	~~9.0~~	~~11.3~~		~~20.5~~	~~43.2~~

		Calculated Value, ksi[a]		
Component Location	*Stress Category*	*Design Internal Pressure*	*Normal Handling*	*ASME Service Level A Limit*[b]
Fuel Basket	P_m	-	0.5	15.4
	$P_L + P_b$	-	8.3	23.1
Shell	P_m	6.9	6.9	18.1
	$P_L + P_b$	10.6	8.7	27.2
	$P_L + P_b + Q$	39.9	-	54.3
Baseplate	P_m	2.3	-	18.7
	$P_L + P_b$	20.5	25.8	28.1
	$P_L + P_b + Q$	21.9	-	56.1
Lid	P_m	0.7	-	16.9
	$P_L + P_b$	3.0	3.9	25.4
	$P_L + P_b + Q$	3.5	-	50.8
Lid Weld	*Total Shear*	2.7	3.5	8.0

a Values shown are maximums irrespective of location

b ~~Weld allowables reduced by 20 percent consistent with calculation of critical flaw size for NDE examinations~~*Stress limits are conservatively taken at the following reference temperatures:*

Fuel Basket	*725 °F*
Shell	*450 °F*
Baseplate	*400 °F*
Lid	*550 °F*
Lid Weld	*550 °F*

Table 4.2-9

Summary of ~~Basket~~ *MPC* Pressure Analysis

Condition	~~**Maximum**~~ ***Calculated*** **Pressure,** ***psia (psig)***	~~**Minimum**~~ ***Design Basis*** **Pressure** ***Limit, psig***
~~PWR Basket~~*MPC* Normal Storage Conditions~~, psia (psig)~~	~~23.2 (8.5)~~	~~6.8 (-7.9)~~
Minimum Internal Pressure	*36.4 (21.7)*	*0*
Maximum Internal Pressure	*72.4 (57.7)*	*100*
~~PWR Basket~~*MPC* Accident Storage Conditions~~, psia (psig)~~	~~67.6 (52.9)~~	~~N/A~~
Minimum Internal Pressure	*N/A*	*0*
Maximum Internal Pressure	*109.5 (94.8)*	*125*
~~Basket Overpack Normal Storage Conditions, psia (psig)~~	~~23.4 (8.7)~~	~~6.9 (-7.8)~~
~~Basket Overpack Accident Storage Conditions, psia (psig)~~	~~64.5 (49.8)~~	~~N/A~~

Table 4.2-10

Concrete Cask Structural Load Combination Summary

Load Combination		Stress/Load	Maximum[1] Stress/Load	Allowable[1] Stress/Capacity
1	1.4D + 1.7L	Shear Normal	0 0.50	- 2.8
2	1.4D + 1.7L + 1.7H	Same as Combination No. 1 (H = 0)		
3	$0.75(1.4D+1.7L+1.7H+1.7T_o+1.7W)$	Shear Normal	0 1.8	0.11 2.8
4	$0.75(1.4D + 1.7L + 1.7H + 1.7T_o)$	Bounded by Load Combination No. 3		
5	$D + L + H + T_o + E_{ss}$	Shear Normal	0.05 1.5	0.11 2.8
6	$D + L + H + T_o + A$	See Section 8.2.3		
7	$D + L + H + T_a$	Bounded by Combination No. 3 because $T_o = T_a$		
8	$D + L + H + T_a + W_t$	Shear Capacity Moment Capacity	457.52[2] 87,820[2]	1,106[2] 94,170[2]

1 Units are ksi unless otherwise noted.

2 Capacities calculated per ACI-349 are used for these load combinations instead of stresses. Capacities are in kips (force) or kips-in (moment).

Table 4.2-11

Summary of ~~Maximum~~ *Bounding* Concrete Cask Thermal Stresses
75°F Ambient Air, Normal Operation

Component	Q (ksi)
Concrete	1.1
Rebar	
Vertical	39.4
Hoop	47.9
Liner	1.4
Cover Plate	2.0
Bottom Plate	4.0

Table 4.2-12
Summary of Cask Thermal Evaluation

	Temperatures (°F)							
	Ambient	Solar	Air Outlet	Outer Concrete	Inner Concrete	~~PWR Basket~~ *MPC* Shell	Max Clad	Transfer Cask Neutron Shielding Material
Normal Operation								
Limits	-	-	-	**225**	**225**	*450*~~-~~	~~705~~*647*	-
~~(without Basket Overpack, 26 kWt)~~								
Steady State Normal	75	no	~~176~~*157*	85	~~189~~*170*	~~282~~*280*	~~637~~*543*	-
~~10% Fuel Pin Failure[2]~~	~~75~~	~~no~~	~~176~~	~~85~~	~~189~~	~~282~~	~~618~~	-
~~(with Basket Overpack, 24 kWt)~~								
~~Steady State Normal~~	~~75~~	~~no~~	~~173~~	~~85~~	~~181~~	~~349~~	~~672~~	-
~~10% Fuel Pin Failure[2]~~	~~75~~	~~no~~	~~173~~	~~85~~	~~181~~	~~349~~	~~681~~	-
Off-normal and Infrequent Events								
~~(without Basket Overpack, 26 kWt)~~								
Limits	-	-	-	**300**	**300**	-	**1058**	~~350~~*307*
Steady State Severe Cold	-40	no	~~39~~*31*	~~-32~~ *-29*	~~50~~*28*	~~174~~*153*	~~540~~*437*	-
Steady State Severe Hot	100	yes	~~206~~*197*	~~137~~*127*	~~223~~*214*	~~307~~*314*	~~659~~*580*	-
½ of Inlets Blocked	75	no	~~195~~*187*	87	203	~~292~~*318*	~~646~~*572*	-
~~Basket~~ *MPC* in Transfer Cask with He	75	no	-	-	-	~~381~~*331*	~~729~~*579*	-
with He	100	yes	-	-	-	~~404~~*365*	~~750~~*619*	~~259~~*248*
with vacuum	75	no	-	-	-	~~381~~*339*	~~888~~*659*	-
~~Off-normal and Infrequent Events~~								
~~(with Basket Overpack, 24 kWt)~~								
~~Limits~~	~~-~~	~~-~~	~~-~~	~~300~~	~~300~~	~~-~~	~~1058~~	~~-~~
~~Steady State Severe Cold~~	~~-40~~	~~no~~	~~37~~	~~-32~~	~~55~~	~~258~~	~~588~~	~~-~~
~~Steady State Severe Hot~~	~~100~~	~~yes~~	~~203~~	~~136~~	~~215~~	~~371~~	~~692~~	~~-~~
~~½ of Inlets Blocked~~	~~75~~	~~no~~	~~190~~	~~86~~	~~194~~	~~357~~	~~679~~	~~-~~
Hypothetical Events/Accidents								
Limits	-	-	-	**350**	**350**	*775*~~-~~	**1058**	-
12 hour Max Thermal	125	yes	~~235~~*224*	~~192~~*152*	~~258~~*243*	~~333~~*340*	~~683~~*608*	-
~~(without Basket Overpack, 26 kWt~~								
~~12 hour Max Thermal~~	~~125~~	~~yes~~	~~232~~	~~189~~	~~250~~	~~393~~	~~712~~	~~-~~
~~(with Basket Overpack, 24 kWt)~~								
All Inlets ~~and Outlets~~ Blocked[1]	~~75~~*100*	~~no~~*yes*	n/a	~~89~~*127*	350	~~171~~[2]	~~826~~[2]	-
(transient values at ~~31.5~~*57.1* hours)								

[1] Concrete temperature limit (350 °F) is reached in approximately ~~31.5~~*57.1* hours, and all calculated temperatures will continue to increase with time until steady state conditions are reached.

[2] *Concrete temperature reaches the maximum allowable limit before the cladding or the MPC shell temperatures reach their respective limits.* ~~10% fuel pin failure is an off-normal event. However, the long-term fuel clad temperature limit is applicable since the failures would not be readily detected and corrected.~~

Table 4.2-13

Thermal Properties

~~Material~~	~~Temperature (°F)~~	~~Specific Heat (BTU/lbm °F)~~	~~Thermal Conductivity (BTU/hr-ft-°F)~~	~~Density (lbm/ft³)~~	~~Emissivity~~
~~Carbon Steel~~	~~-10~~ ~~0~~ ~~200~~ ~~550~~ ~~900~~	~~0.095~~ ~~0.097~~ ~~0.118~~ ~~0.135~~ ~~0.156~~	~~22.7~~ ~~22.8~~ ~~24.4~~ ~~23.4~~ ~~20.9~~	~~490~~	~~0.8~~ ~~(coated)~~
~~Stainless Steel~~	~~-58~~ ~~200~~ ~~400~~ ~~550~~ ~~750~~	~~0.111~~ ~~0.122~~ ~~0.129~~ ~~0.132~~ ~~0.136~~	~~7.9~~ ~~9.3~~ ~~10.4~~ ~~11.1~~ ~~12.0~~	~~488~~	~~.48~~ ~~(bare)~~ ~~0.9~~ ~~(coated)~~
~~Lead~~	~~-148~~ ~~32~~ ~~212~~ ~~392~~ ~~572~~	~~0.03~~	~~21.32~~ ~~20.28~~ ~~19.3~~ ~~18.2~~ ~~17.22~~	~~710~~	—
~~Concrete~~	~~32-400~~	~~0.21~~	~~0.719~~	~~141~~	~~0.87~~
~~Air~~	~~-50~~ ~~0~~ ~~32~~ ~~100~~ ~~200~~ ~~300~~ ~~500~~ ~~700~~	~~0.238~~ ~~0.239~~ ~~0.240~~ ~~0.240~~ ~~0.241~~ ~~0.243~~ ~~0.247~~ ~~0.253~~	~~0.0114~~ ~~0.0130~~ ~~0.0140~~ ~~0.0154~~ ~~0.0174~~ ~~0.0193~~ ~~0.0231~~ ~~0.0268~~	~~0.094~~ ~~0.086~~ ~~0.081~~ ~~0.071~~ ~~0.060~~ ~~0.052~~ ~~0.041~~ ~~0.037~~	—
~~Helium~~	~~0~~ ~~200~~ ~~400~~ ~~600~~ ~~800~~	~~1.24~~	~~0.078~~ ~~0.097~~ ~~0.115~~ ~~0.129~~ ~~0.138~~	—	—

Material	Temperature (°F)	Specific Heat (BTU/lbm °F)	Thermal Conductivity (BTU/hr-ft-°F)			Density (lbm/ft^3)	Emissivity
Carbon Steel	-10 0 200 550 900	0.095 0.097 0.118 0.135 0.156	22.7 22.8 24.4 23.4 20.9			490	0.8 (coated)
Concrete	32-400	0.21	0.719			141	0.87
			@ 200°F (BTU/hr-ft-°F)	@ 450°F (BTU/hr-ft-°F)	@ 700°F (BTU/hr-ft-°F)		
Type 304 Stainless Steel [Reference 13]		0.12	8.4[1]	9.8[1]	11.0[1]	501	0.36[2]
Lead [Reference 12]		0.031	19.4	17.9	16.9	710	---
Water [Reference 14]		0.99	0.392	0.368	Not Applicable	62.4	-
Air [Reference 12]		0.24	0.0173	0.0225	0.0272	Ideal Gas Law	---
Helium [Reference 12]		1.24	0.0976	0.1289	0.1575	Ideal Gas Law	---

[1] Bounding values for a class of stainless steels defined as Alloy X in the HI-STAR 100 FSAR [Reference 17].
[2] From Reference 15.

Table 4.2-14

Summary of Storage System Cooling Air Flow Analysis
For Normal Storage Conditions

Location	Temperature at 75°F Ambient (°F)	Temperature at 100°F Ambient (°F)	Temperature at -40°F Ambient (°F)
Air Inlet	75	100	-40
~~Air Elevation[1] (inches)~~			
~~0 – 16~~	~~84~~	~~109~~	~~-33~~
~~16 – 32~~	~~96~~	~~122~~	~~-24~~
~~32 – 48~~	~~108~~	~~135~~	~~-14~~
~~48 – 64~~	~~121~~	~~148~~	~~-4~~
~~64 – 80~~	~~133~~	~~160~~	~~5~~
~~80 – 96~~	~~145~~	~~173~~	~~15~~
~~96 – 112~~	~~157~~	~~186~~	~~24~~
~~112 – 128~~	~~168~~	~~197~~	~~33~~
~~128 – 144~~	~~176~~	~~206~~	~~39~~ ~~36~~
Air Outlet	~~176~~*157*	~~206~~*197*	~~39~~*31*
Air Flow Rate (lbm/sec)	~~0.792~~*0.638*	~~0.757~~*0.631*	~~1.009~~*0.825*

~~[1] Elevation is based on height above beginning of heated fuel length.~~

~~Table 4.2-15~~

~~PWR BASKET & OVERPACK COATINGS CRITERIA[1]~~

~~Criteria~~	~~PWR Basket Interior and Failed Fuel Cans~~	~~PWR Basket Exterior and Basket Overpack~~
~~Boric acid immersion at ambient temperature[2]~~	~~4000 ppm for 120 hours~~	~~4000 ppm for 120 hours~~
~~Boric acid immersion at elevated temperature[2]~~	~~4000 ppm at a heat-up rate of ~3°F/hr to 211°F~~	~~N/A~~
~~High Temperature Exposure~~	~~850°F +/- 15°F for 72 hours~~	~~475°F +/-10°F for 72 hours~~
~~Radiation Exposure[2]~~	~~1.2×10^{10} Rad total Gamma~~	~~2.0×10^{8} Rad total Gamma~~
~~Emissivity~~	~~≥0.8~~	~~≥0.9~~
~~Adhesion~~	~~>200 psi~~	~~>200 psi~~
~~Decontamination Ability~~	~~N/A~~	~~Readily~~
~~Chemical resistance~~	~~N/A~~	~~Chemically resistant to general service reagents and decontamination solutions~~
~~Precipitates or corrosion products~~	~~No adverse effects on the fuel or related storage components~~	~~No adverse effects on the fuel or related storage components (PWR Basket Exterior)~~

~~Note: 1. All coatings are to be tested per SNC-213-03-27, "TranStor Coatings Qualification Program Report."~~
~~2. No generation of volatile organic compounds or flammable gases are allowed.~~

Table 4.7-1

Transfer Station Fabrication Specification Summary

MATERIALS

Steel components shall be of material as specified on the referenced drawings.

WELDING

Welds shall be in accordance with the referenced drawings.
Filler metals shall be appropriate AWS D1.1 material.
Welders and welding operators shall be qualified in accordance with AWS D1.1.
Welding procedures shall be written and qualified in accordance with AWS D1.1.
Visual inspection of structural welds shall be performed to the requirements of AWS D1.1.

CONSTRUCTION

Cutting and forming shall be in accordance with AISC Manual of Steel Construction.
Attachment bolts shall be installed and torqued in accordance with referenced drawings.

Quality Assurance

The Transfer Station shall be constructed under a quality assurance program that meets the applicable requirements of 10 CFR 72 Subpart G.

Table 4.7-2

Transfer Cask Lift Components[1]

Component		Safety Factor	ANSI N14.6	
			Non-Critical	Critical
Trunnion	yield	~~11.8~~*8.2*	3	6
	ultimate	~~25.9~~*10.2*	5	10
~~Shell~~	~~yield~~	~~6.8~~	~~3~~	~~6~~
	~~ultimate~~	~~10.5~~	~~5~~	~~10~~
Shield *Door* Rail Bottom Plates	yield	~~7.5~~*7.7*	3	6
	ultimate	~~13.2~~*15.5*	5	10
Shield Door Rail Lower Welds	yield	~~14.3~~*10.9*	3	6
	ultimate	~~25.2~~*22.0*	5	10
*Shield Door*Rail/ *Transfer Cask* Shell Weld	yield	~~8.2~~*6.4*	3	6
	ultimate	~~14.8~~*13.0*	5	10

Component		Stress/Force	AISC Allowable
~~Cover Plate~~*Top Lid*	bending	~~13.2~~*8.77* ksi	~~24.6~~*26.0* ksi
Bolts	tension	~~29.0~~*10.3* kips	~~34.6~~*25.0* kips

1 For lifts in the Fuel Building. The Transfer Cask is not used for lifting at the ISFSI.

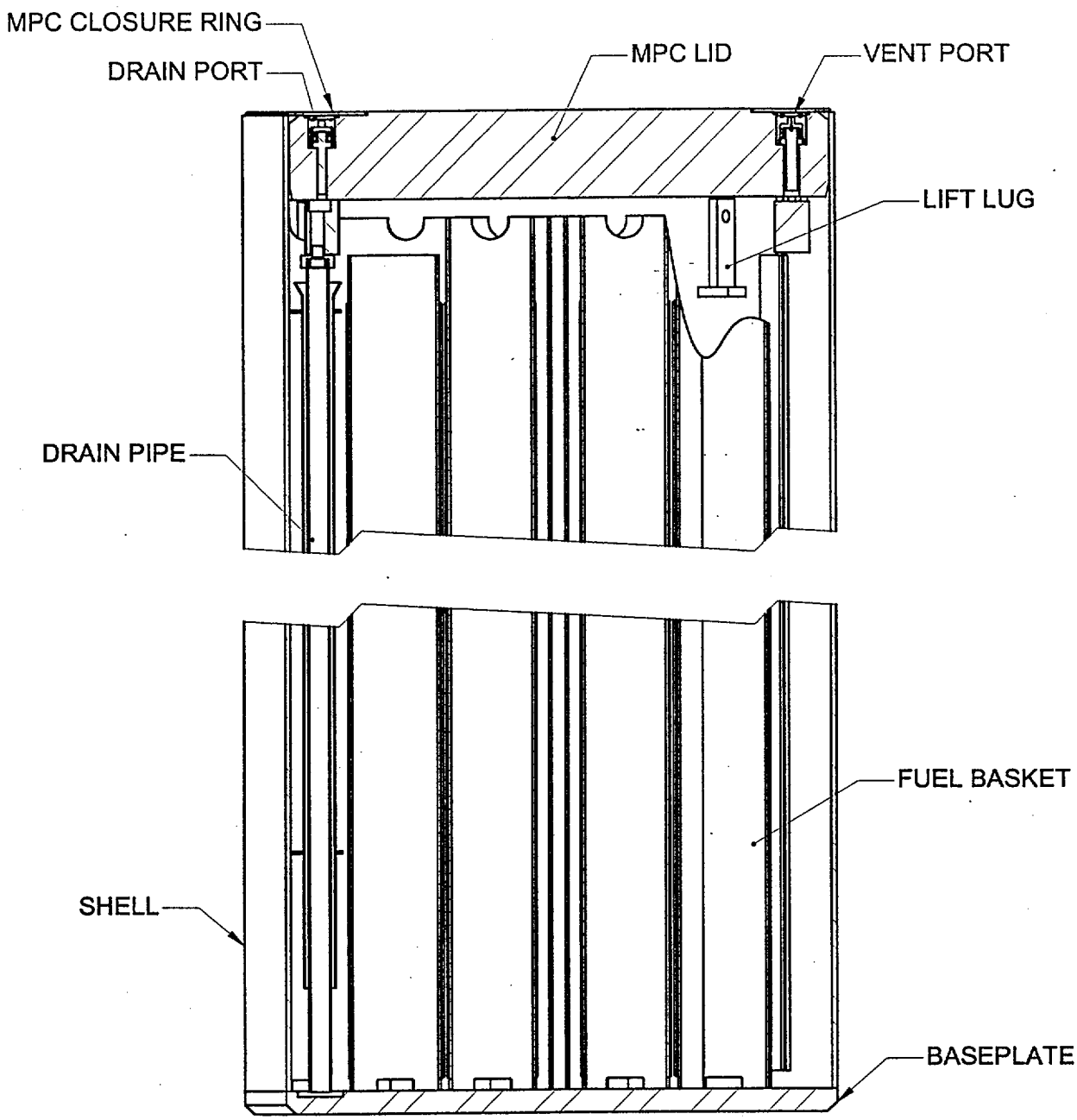

TOJAN ISFSI
SAFETY ANALYSIS REPORT

FIGURE 4.2-1a
MULTI-PURPOSE CANISTER
ELEVATION VIEW

Revision 2

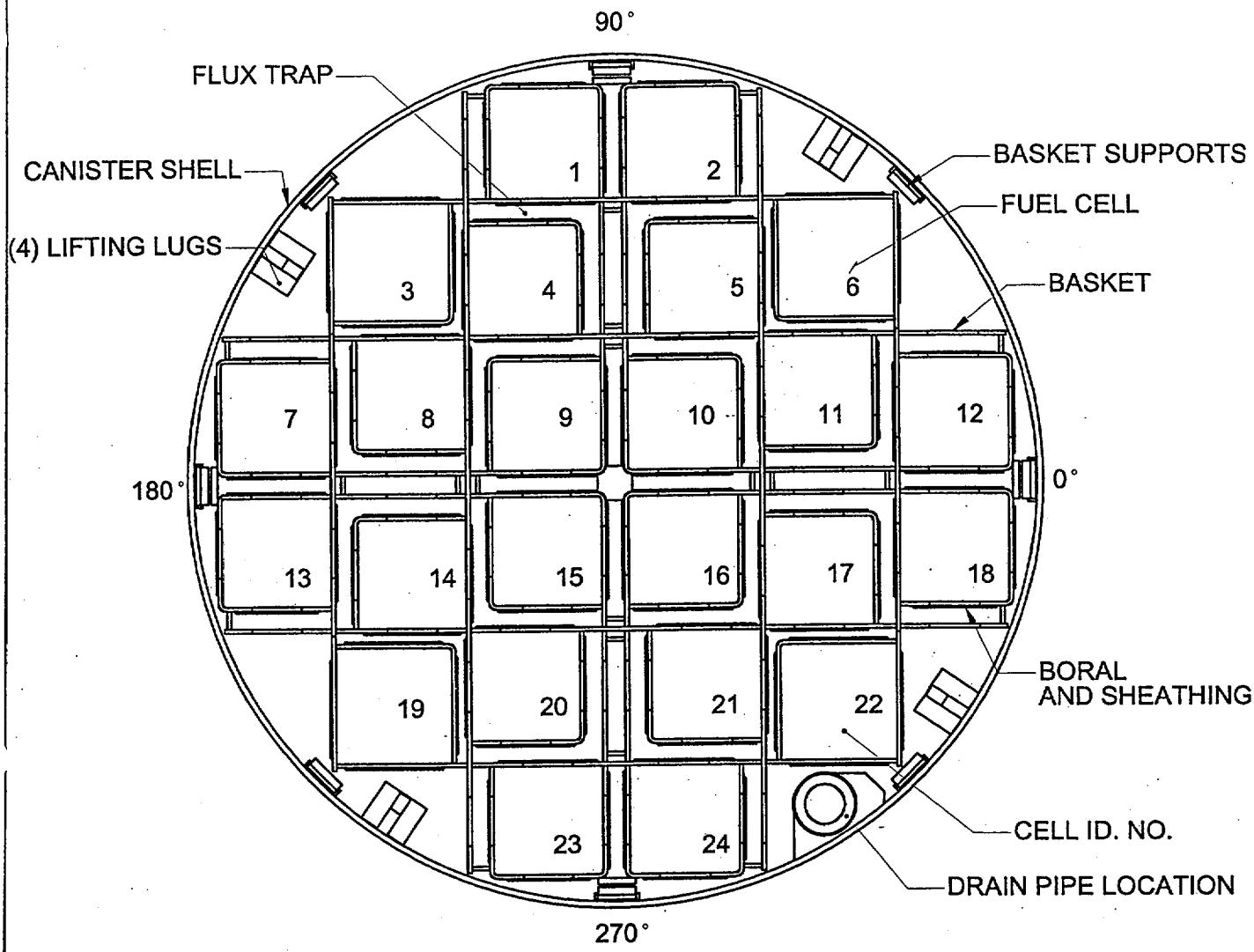

TOJAN ISFSI
SAFETY ANALYSIS REPORT

FIGURE 4.2-1b
MPC-24E/EF
CROSS SECTION

Revision 2

Figure 4.2-2 Deleted

This page intentionally blank.

Figure 4.2-3 Deleted

This page intentionally blank.

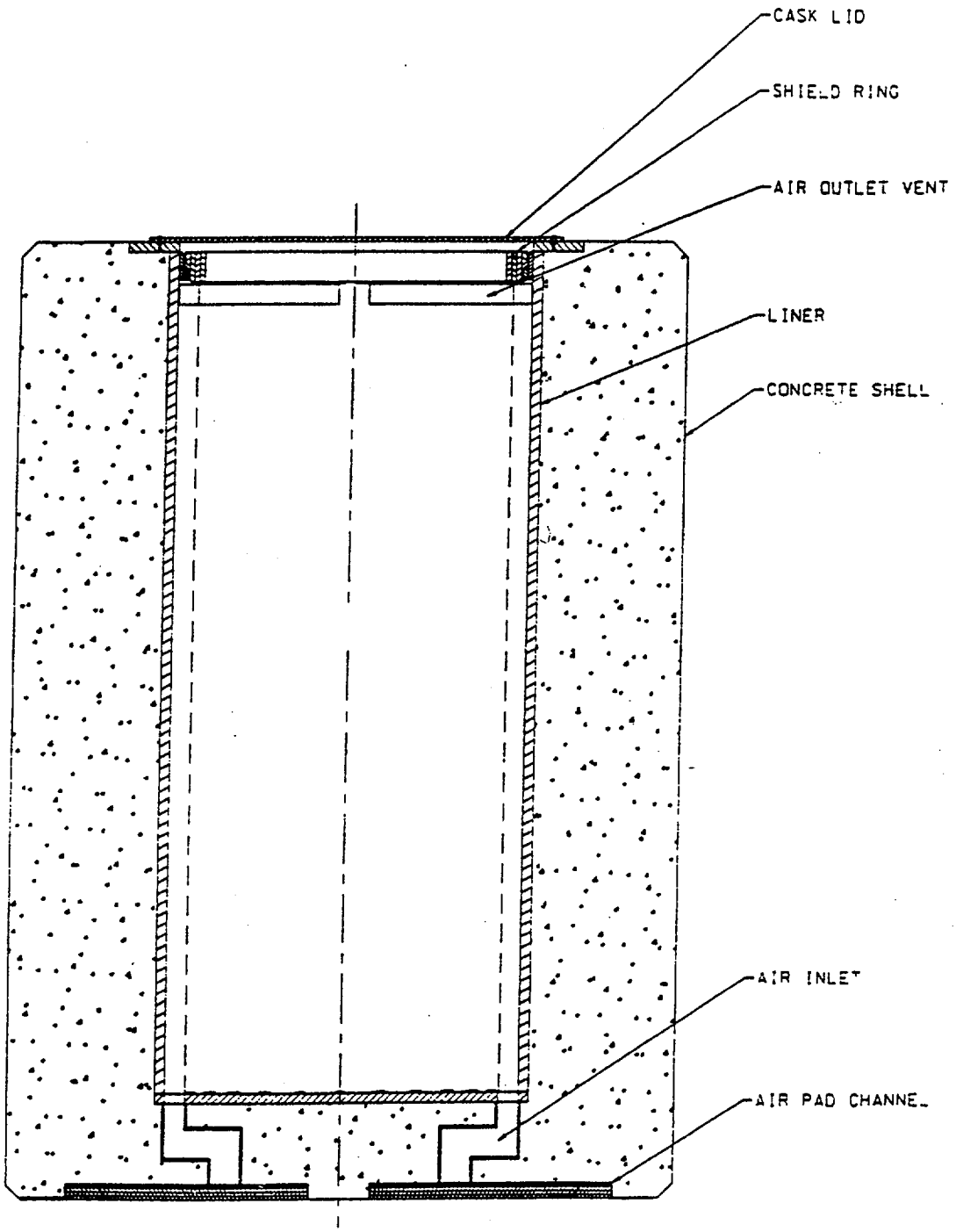

TROJAN ISFSI
SAFETY ANALYSIS REPORT

FIGURE 4.2-4
CONCRETE CASK

Security-Related Information Figure Withheld Under 10 CFR 2.390.

TROJAN ISFSI
SAFETY ANALYSIS REPORT

FIGURE 4.2-5
FAILED FUEL CAN

Security-Related Information Figure Withheld Under 10 CFR 2.390.

TROJAN ISFSI SAFETY ANALYSIS REPORT
FIGURE 4.2-6a FUEL DEBRIS PROCESS CAN

Security-Related Information Figure Withheld Under 10 CFR 2.390.

TROJAN ISFSI
SAFETY ANALYSIS REPORT

FIGURE 4.2-6b
FUEL DEBRIS PROCESS CAN CAPSULE

Figure 4.2-7 Deleted

This page intentionally blank.

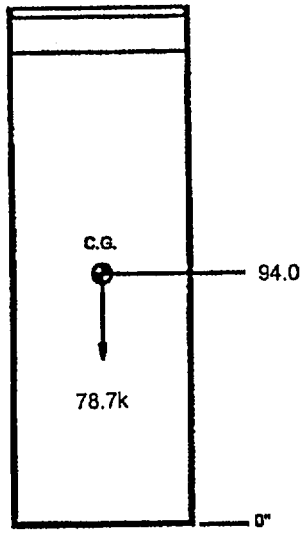

MTC FULLY LOADED WITH LID

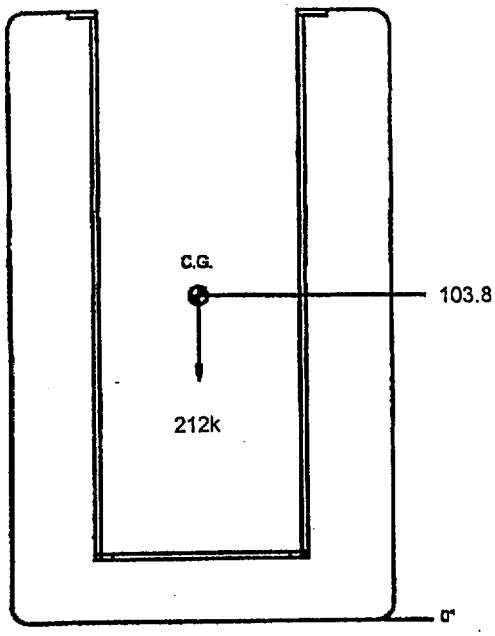

CONCRETE CASK EMPTY WITHOUT COVER PLATE

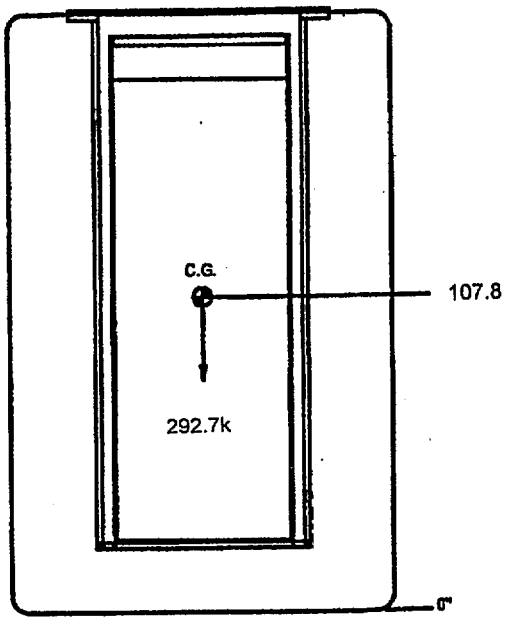

CONCRETE CASK WITH MPC FULLY LOADED

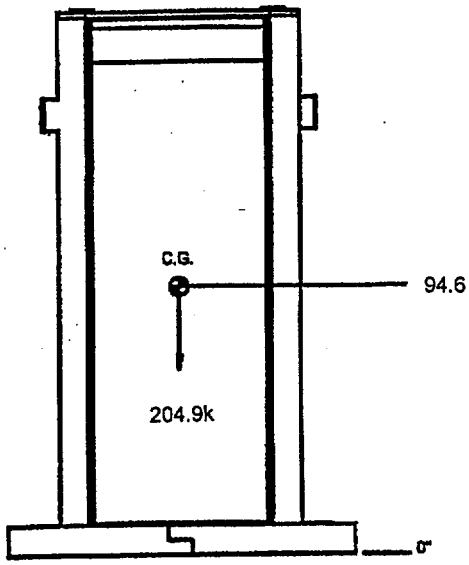

TRANSFER CASK WITH MPC (WET)

TOJAN ISFSI
SAFETY ANALYSIS REPORT

FIGURE 4.2-8
NOMINAL WEIGHTS AND CENTERS OF GRAVITY

Revision 2

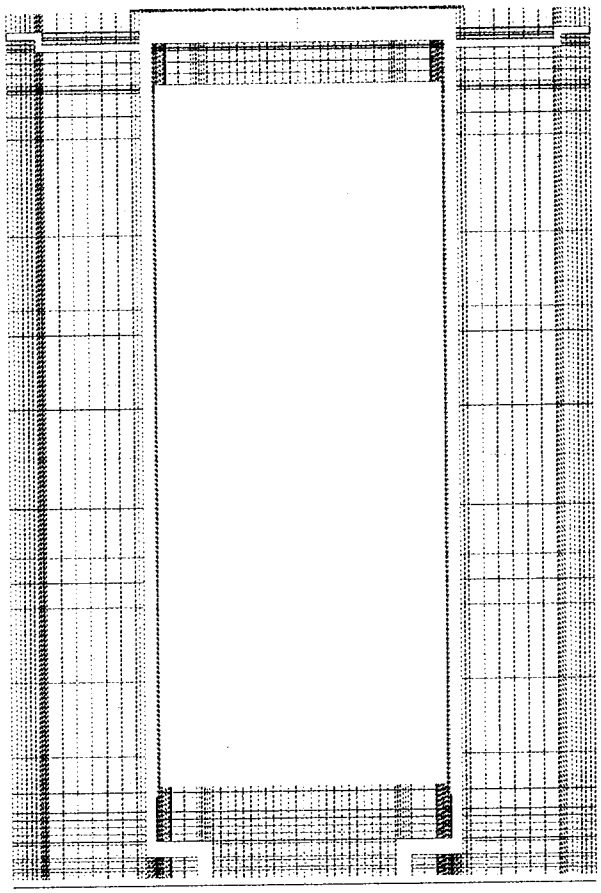

TROJAN ISFSI
SAFETY ANALYSIS REPORT

FIGURE 4.2-9
CONCRETE CASK
THERMAL MODEL

Revision 2

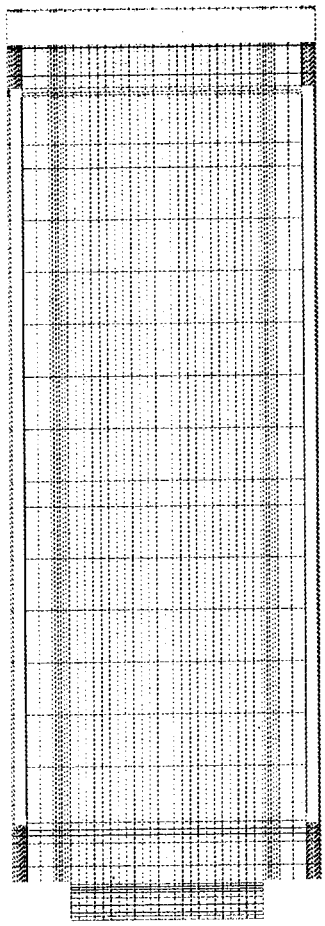

TROJAN ISFSI
SAFETY ANALYSIS REPORT

FIGURE 4.2-10
MPC HEAT TRANSFER MODEL

Revison 2

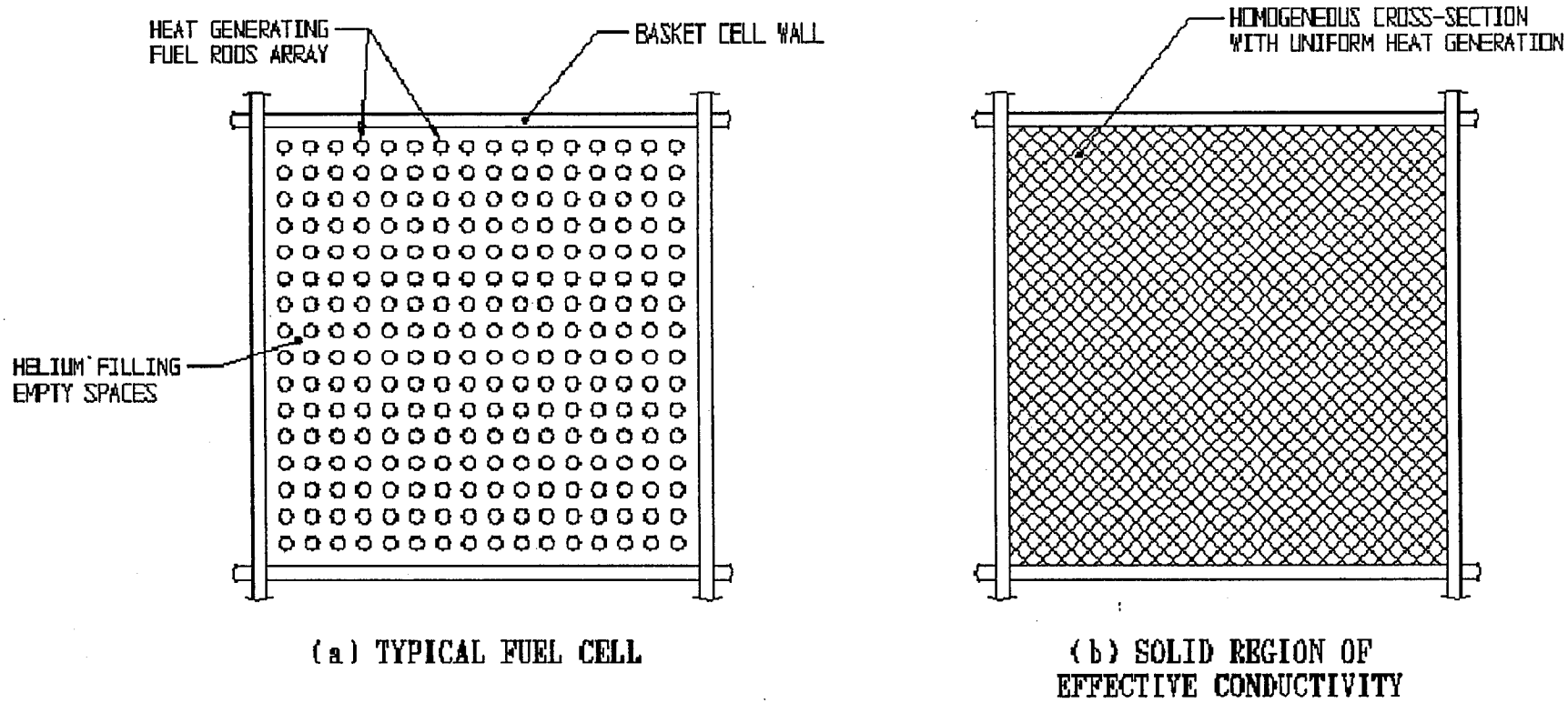

(a) TYPICAL FUEL CELL

(b) SOLID REGION OF EFFECTIVE CONDUCTIVITY

TROJAN ISFSI
SAFETY ANALYSIS REPORT

FIGURE 4.2-11
HOMOGENIZATION OF THE STORAGE CROSS SECTION

Revision 2

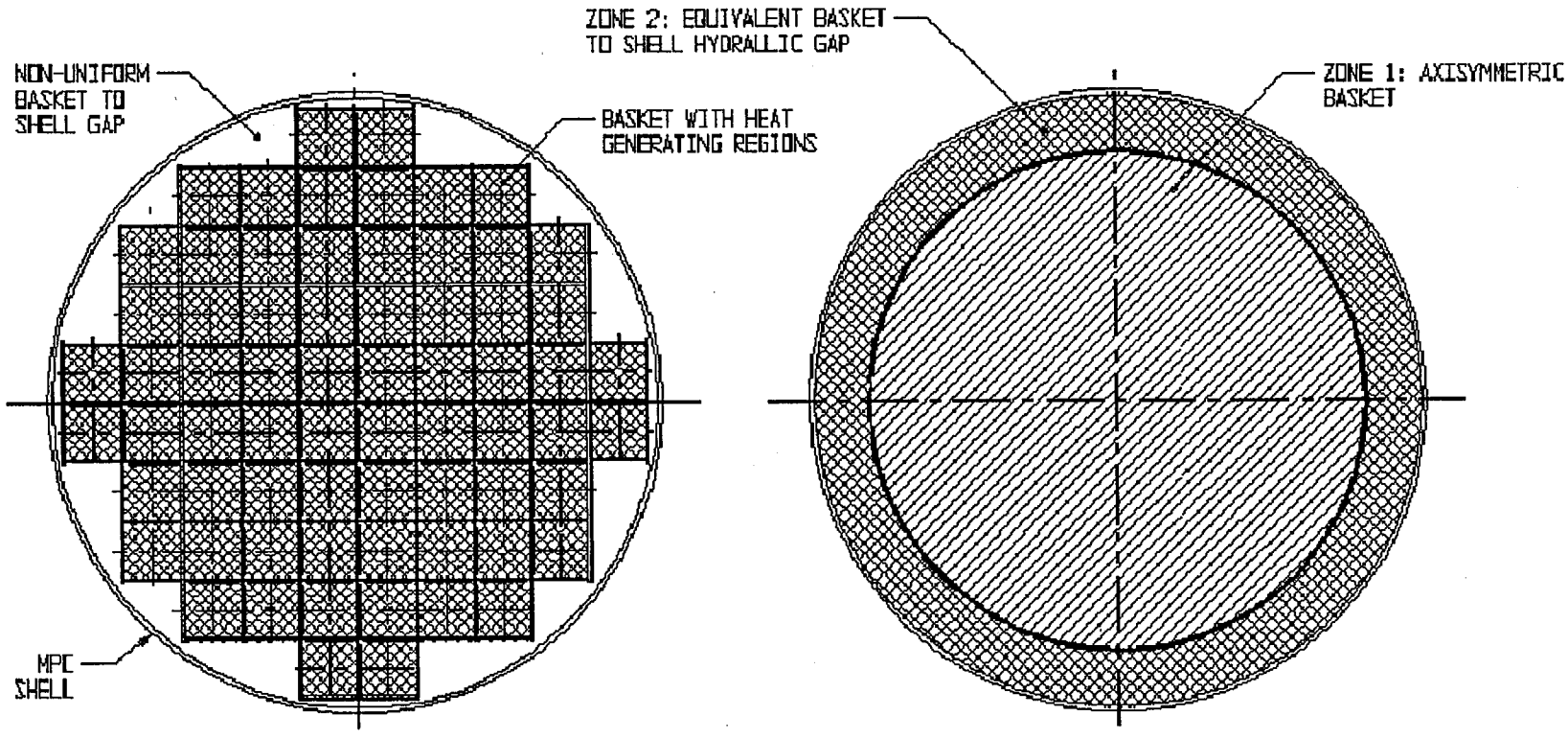

(a) TYPICAL MPC CROSS-SECTION

(b) EQUIVALENT TWO ZONE MODEL

TROJAN ISFSI
SAFETY ANALYSIS REPORT

FIGURE 4.2-12
MPC CROSS-SECTION REPLACED WITH AN EQUIVALENT TWO ZONE AXISYMMETRIC BODY

Revision 2

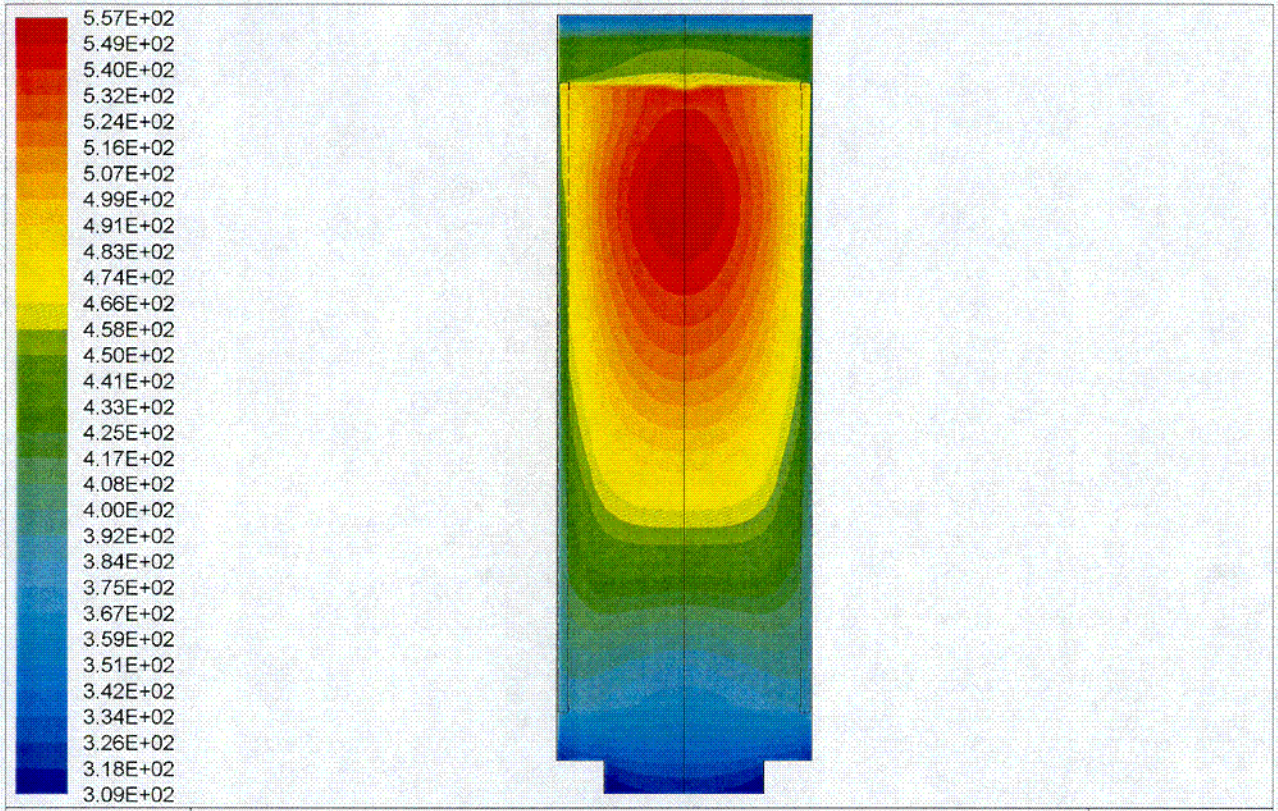

TROJAN ISFSI
SAFETY ANALYSIS REPORT

FIGURE 4.2-13
MPC TEMPERATURE DISTRIBUTION
(75 Degrees F Ambient Air)

Revision 2

C01

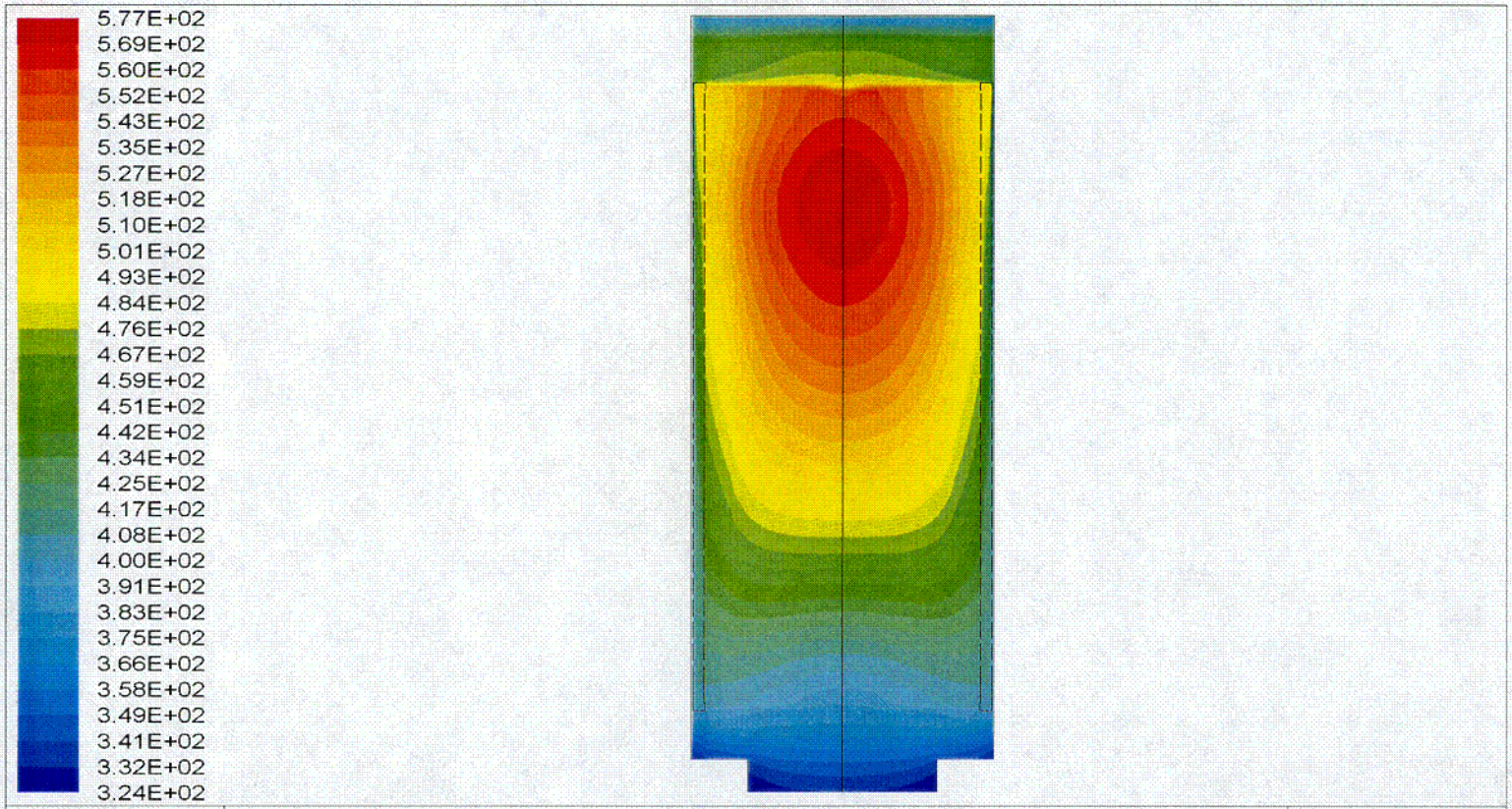

Trojan Cask 17.4 kW Hot Ambient Helium Circulation Model
Temperature (K)
Max = 5.772E+02 Min = 3.239E+02

May 17 2001
Fluent 4.48
Fluent Inc.

TROJAN ISFSI
SAFETY ANALYSIS REPORT

FIGURE 4.2-14
MPC TEMPERATURE DISTRIBUTION
(100 Degrees F Ambient Air)

Revision 2

C02

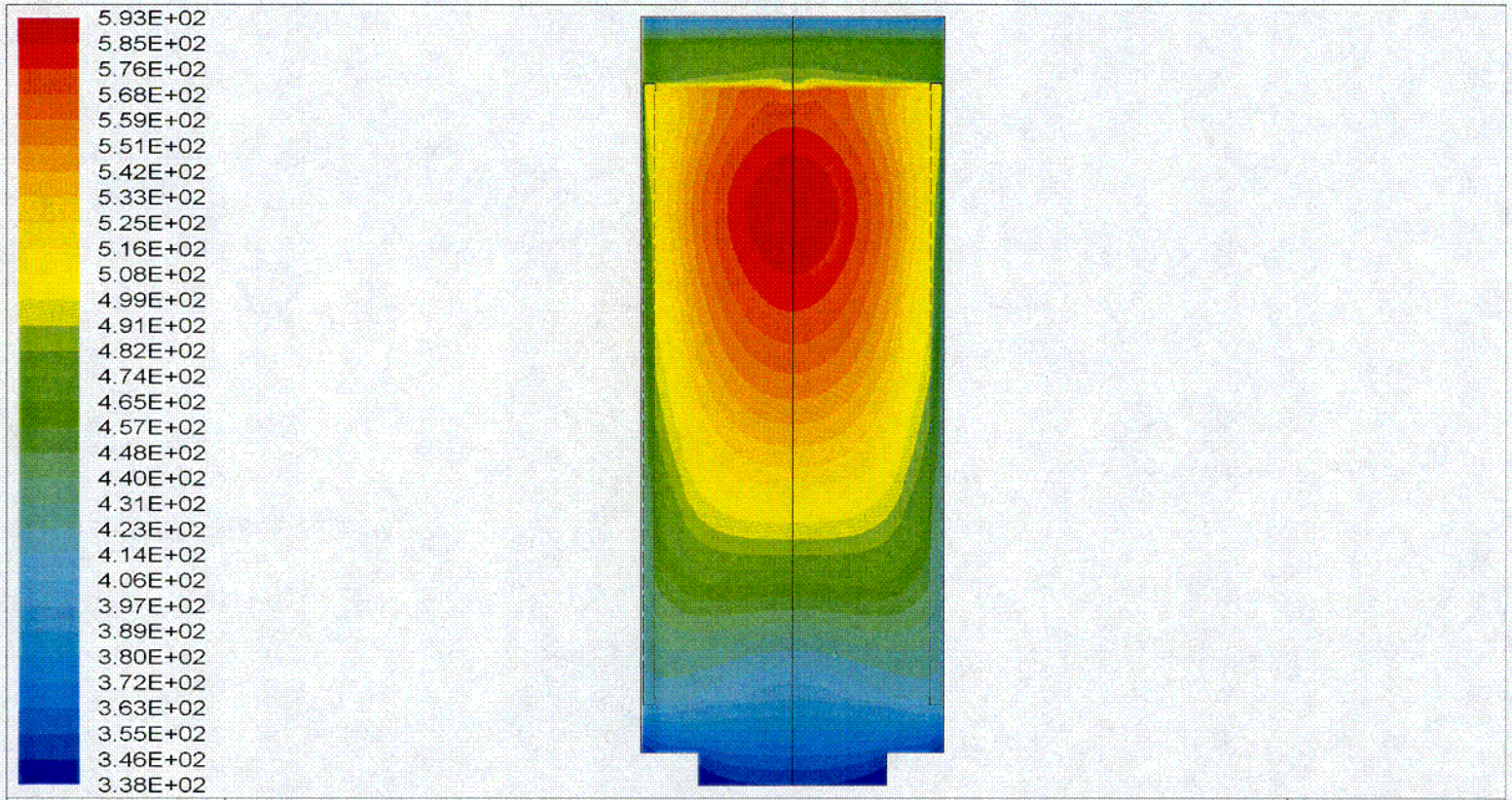

Trojan Cask 17.4 kW Extreme Hot Helium Circulation Model
Temperature (K)
Max = 5.931E+02 Min = 3.378E+02

May 17 2001
Fluent 4.48
Fluent Inc.

TROJAN ISFSI
SAFETY ANALYSIS REPORT

FIGURE 4.2-15
MPC TEMPERATURE DISTRIBUTION
(125 Degrees F Ambient Air)

Revision 2

C03

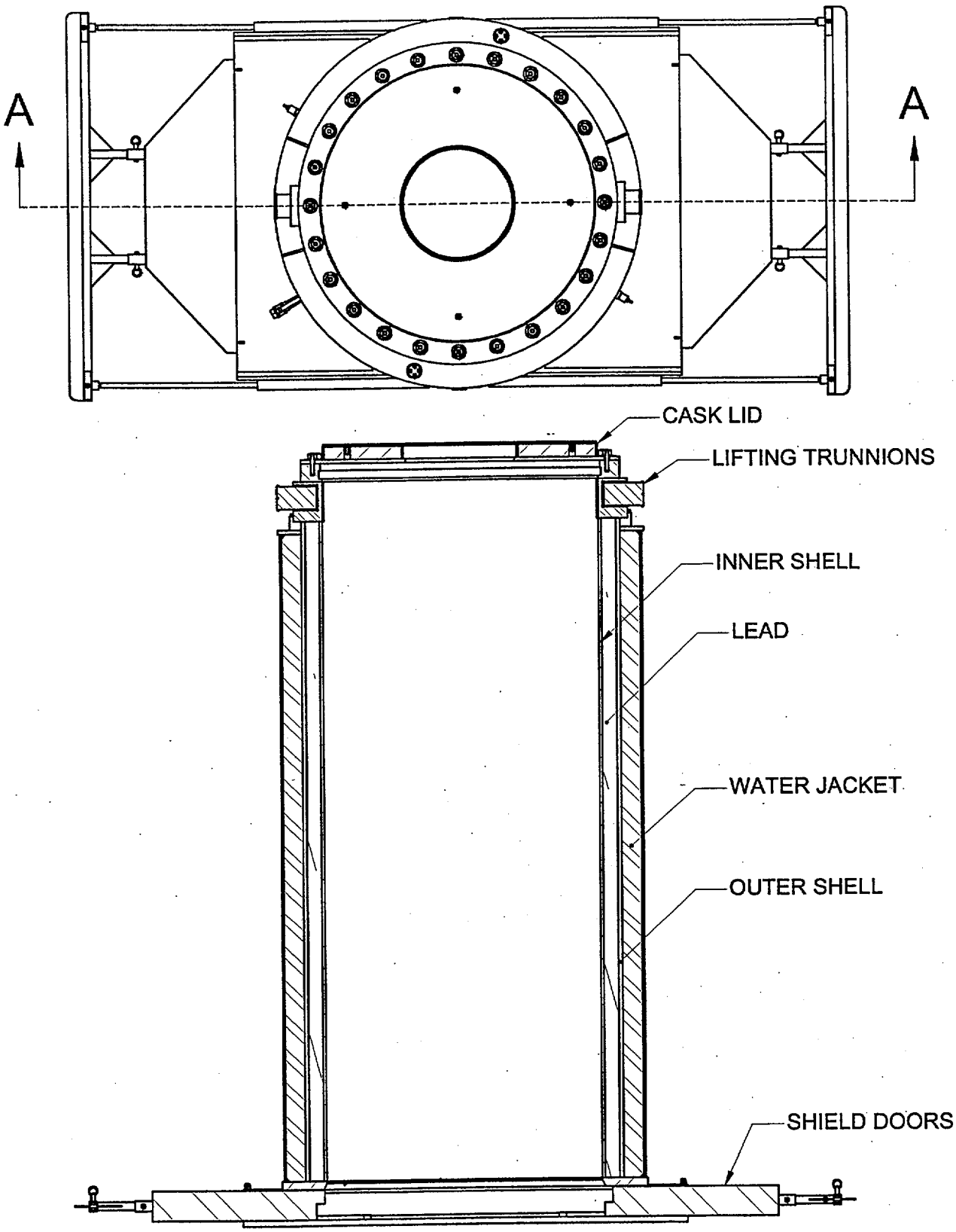

SECTION A-A

TOJAN ISFSI
SAFETY ANALYSIS REPORT

FIGURE 4.7-1
TRANSFER CASK

Revision 2

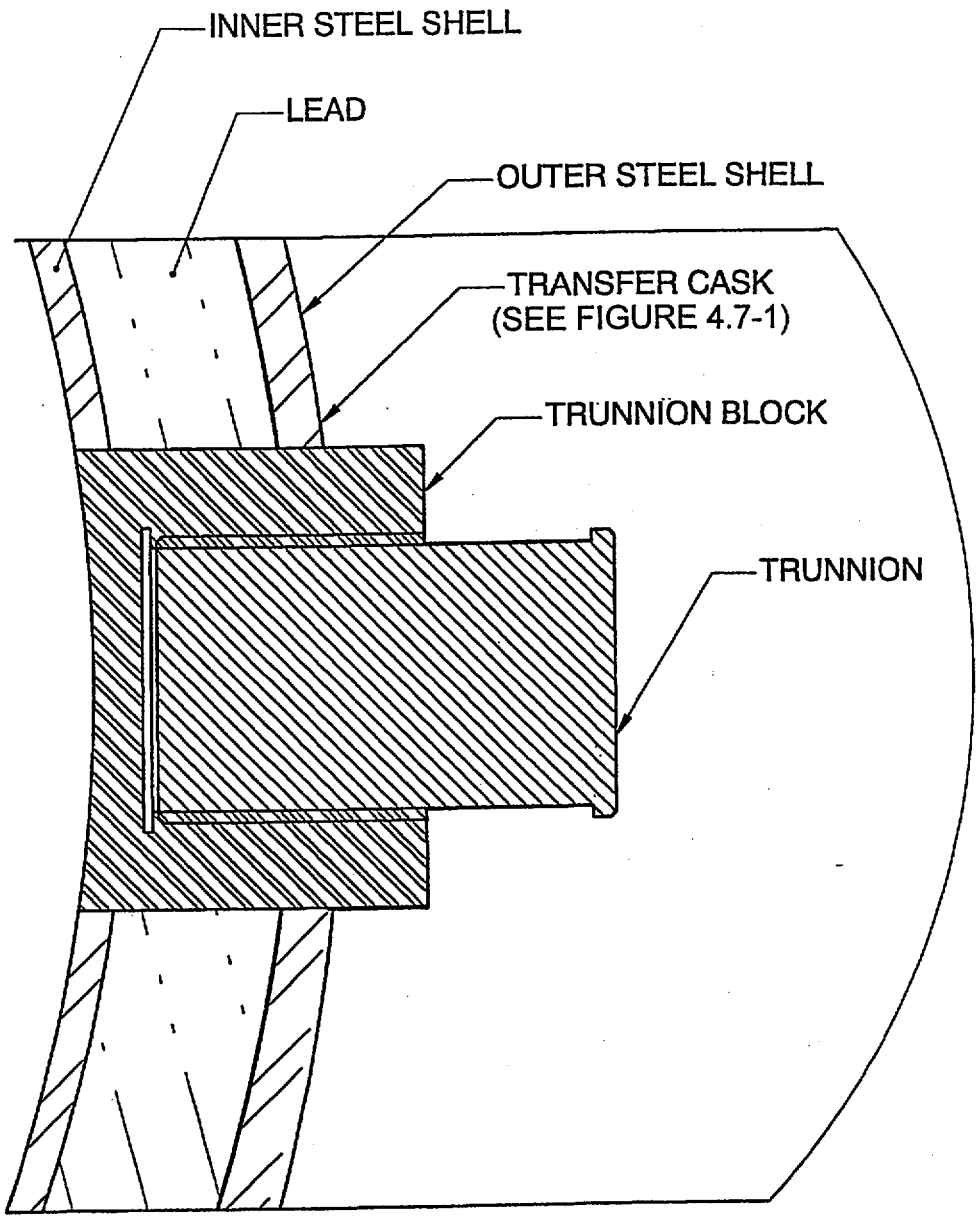

TOJAN ISFSI
SAFETY ANALYSIS REPORT

FIGURE 4.7-2
TRANSFER CASK LIFTING
TRUNNION DESIGN

Revision 2

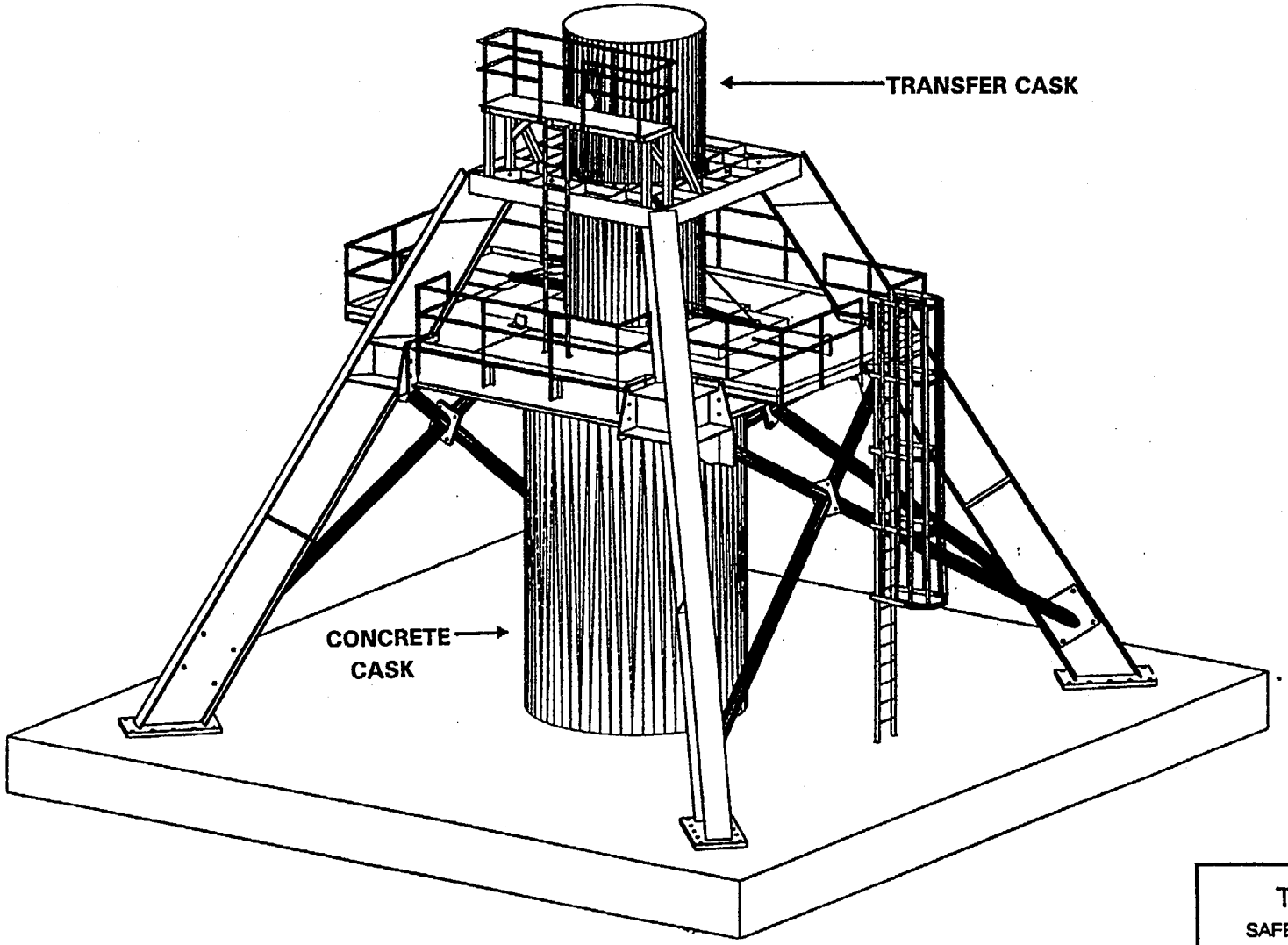

TROJAN ISFSI
SAFETY ANALYSIS REPORT

FIGURE 4.7–3
TRANSFER STATION

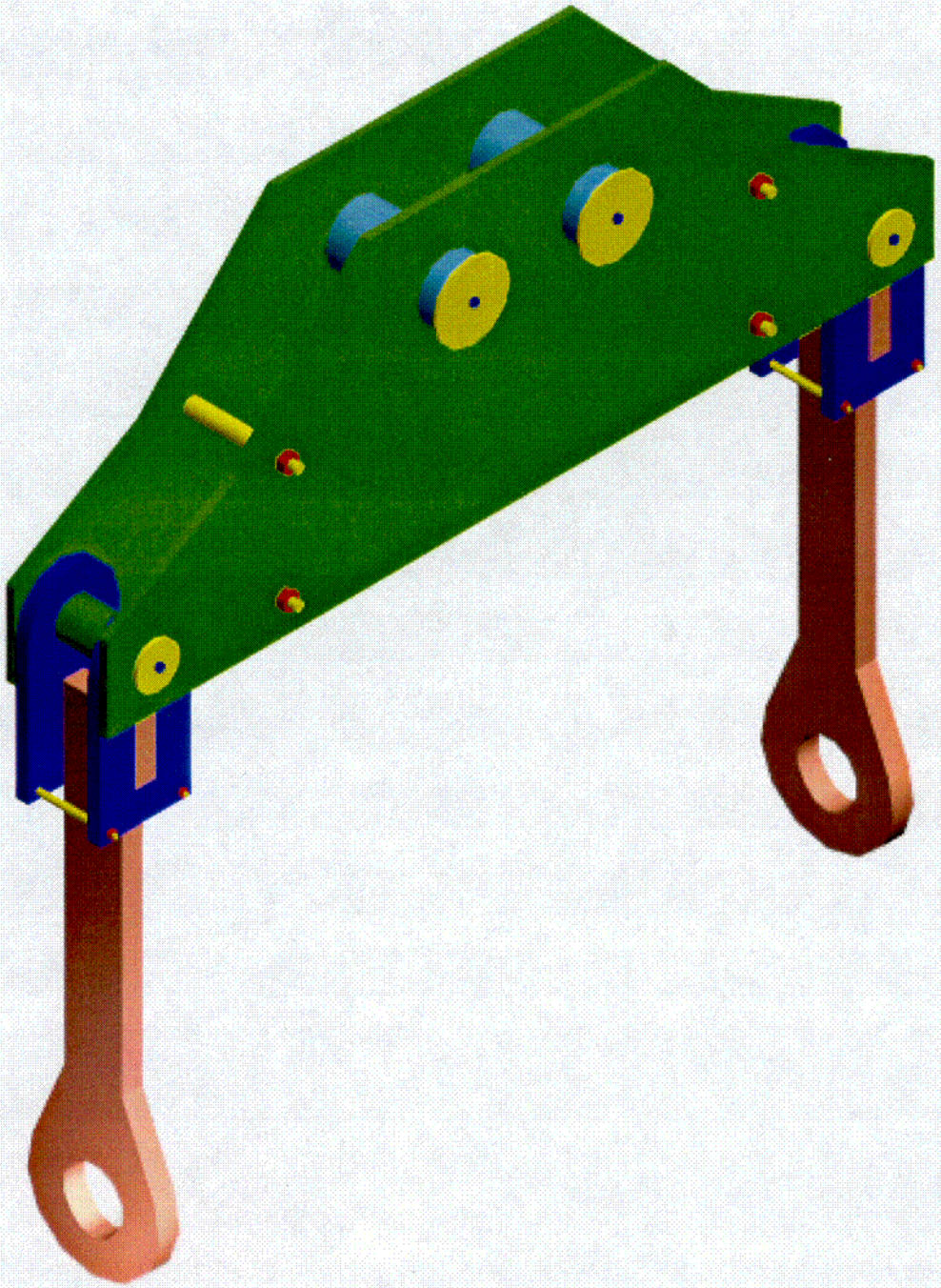

TROJAN ISFSI
SAFETY ANALYSIS REPORT

FIGURE 4.7-4
LIFTING YOKE

Revision 2

C04

Figure 4.7-5

This page intentionally blank.

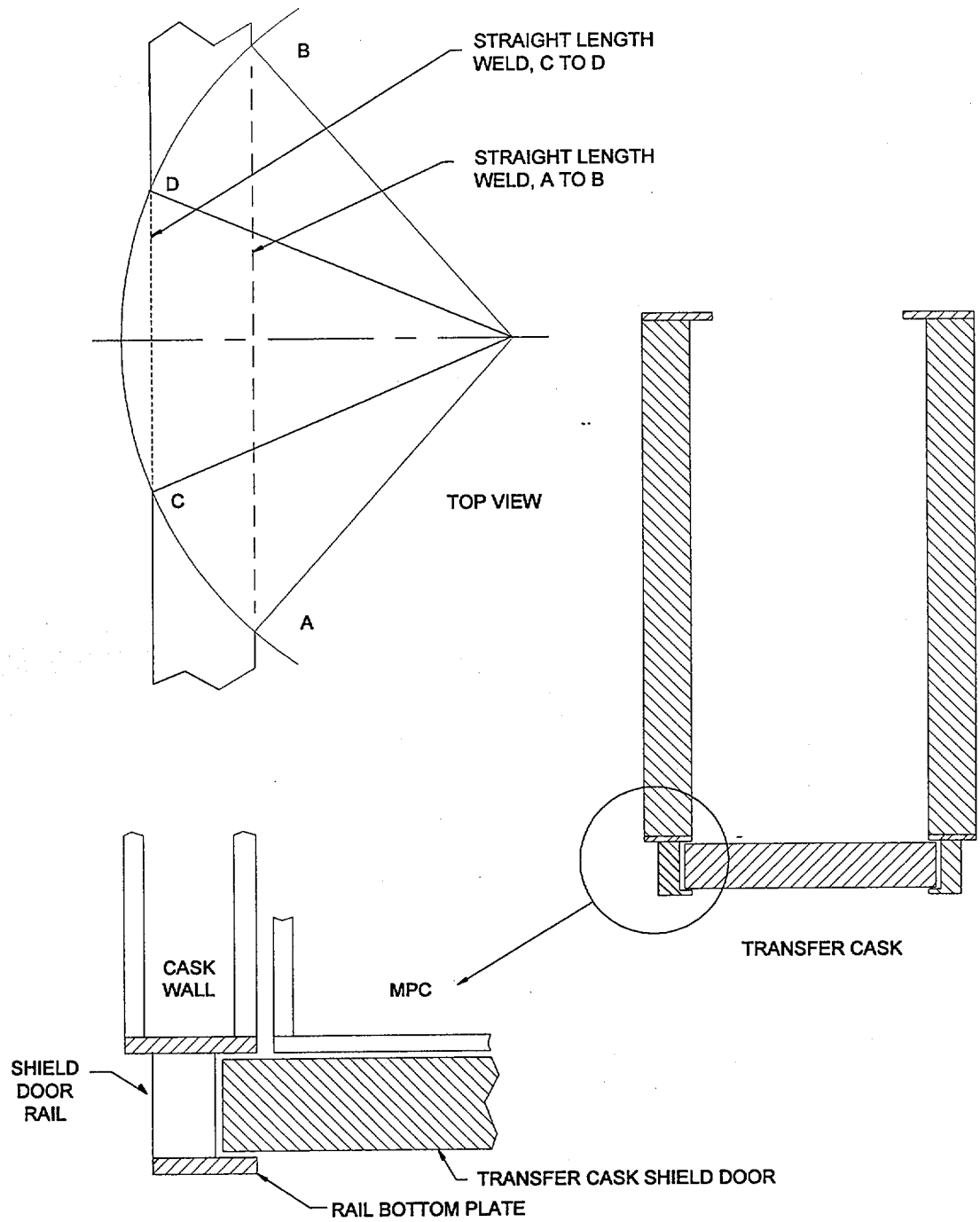

TROJAN ISFSI
SAFETY ANALYSIS REPORT

FIGURE 4.7-6
TRANSFER CASK
SHIELD DOOR RAIL DESIGN

Revision 2

Figure 4.7-7 Deleted

This page intentionally blank.

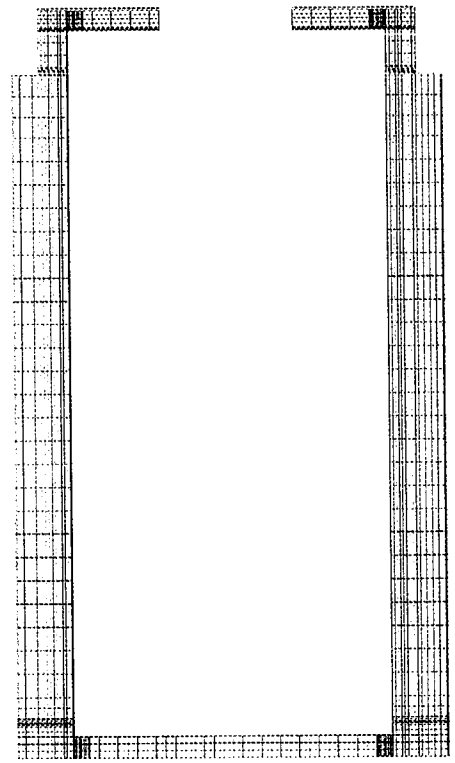

HI-TRAC TRANSFER CASK

May 17 2001
Fluent 4.48
Fluent Inc.

TROJAN ISFSI
SAFETY ANALYSIS REPORT

FIGURE 4.7-8
HI-TRAC TRANSFER CASK FLUENT MODEL
Revision 2

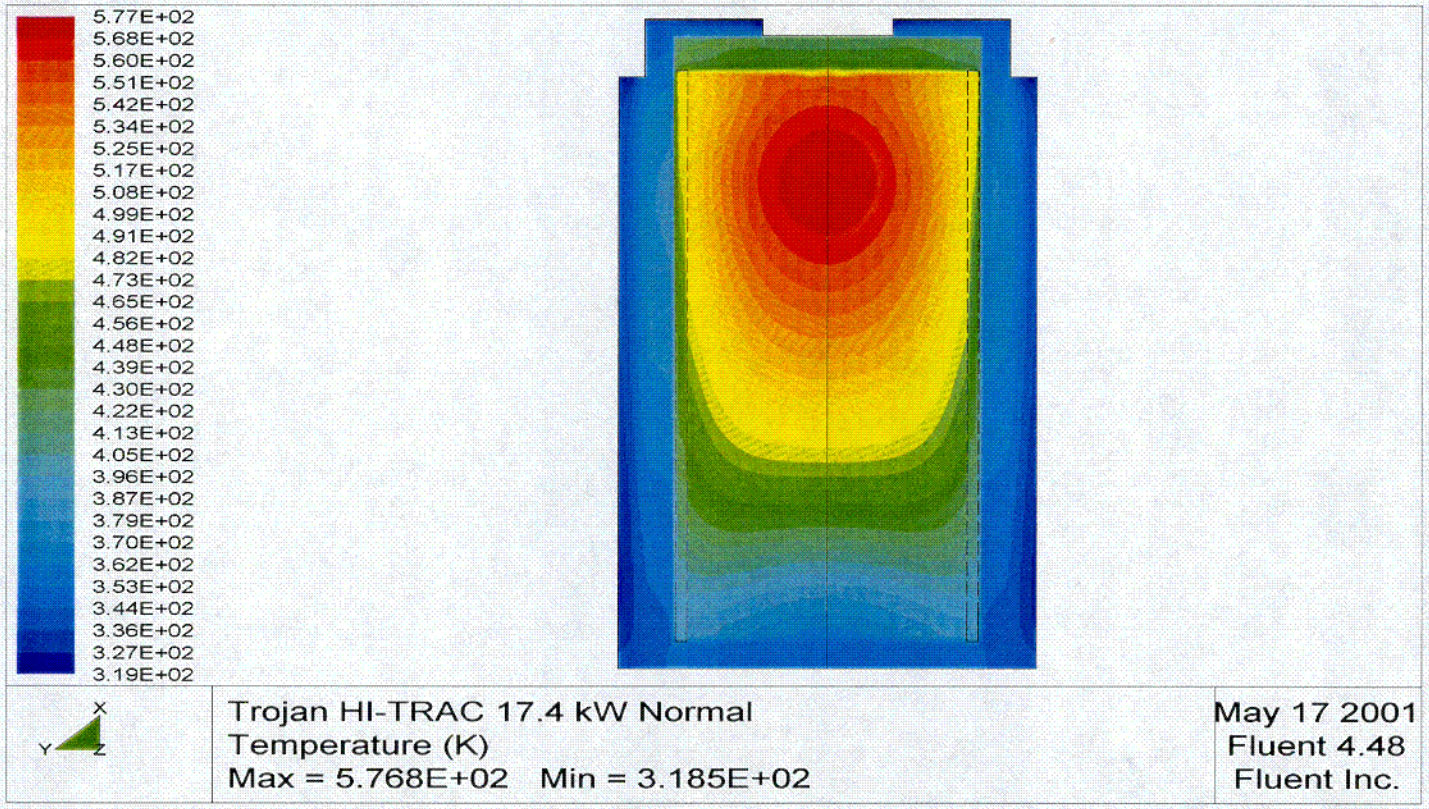

TROJAN ISFSI
SAFETY ANALYSIS REPORT

FIGURE 4.7-9
MPC TEMPERATURE DISTRIBUTION IN TRANSFER CASK
(75 Degrees F Ambient Air)
Revision 2

C05

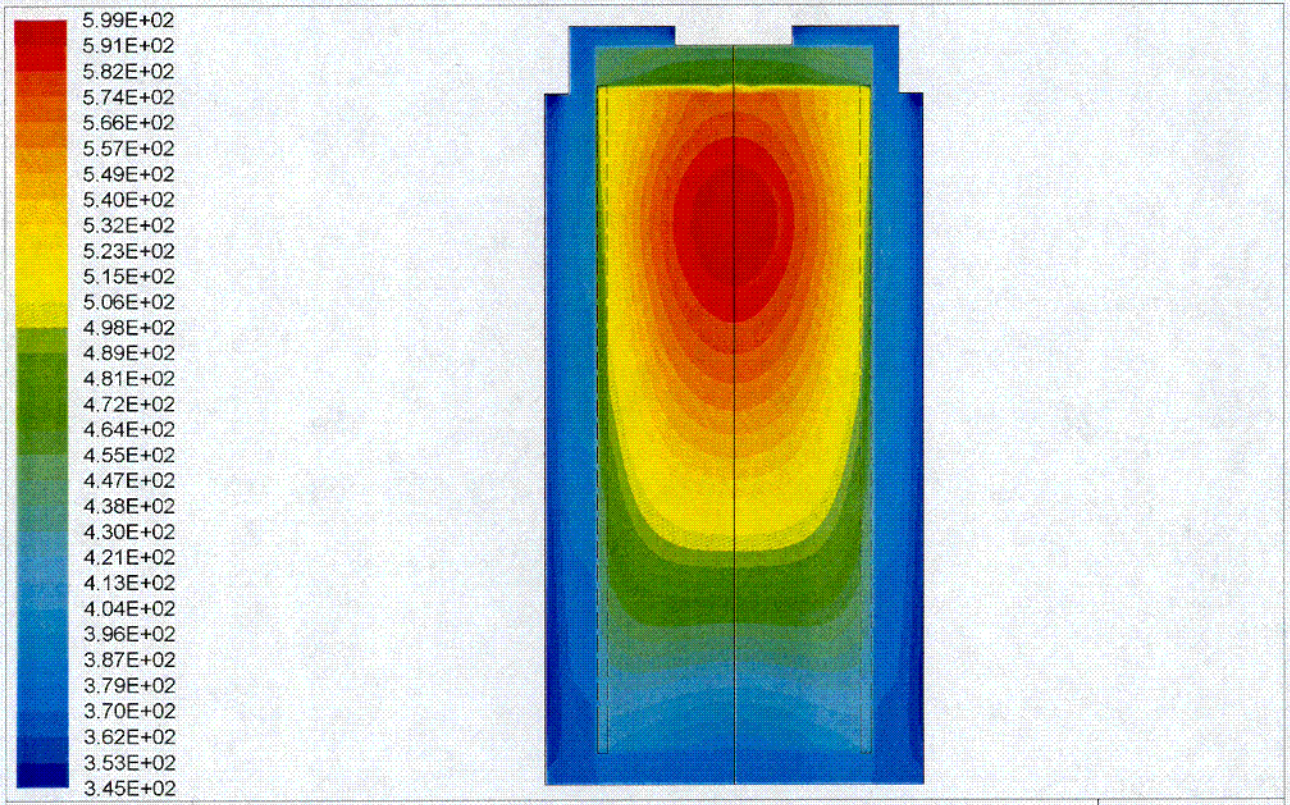

TROJAN ISFSI
SAFETY ANALYSIS REPORT

FIGURE 4.7-10
MPC TEMPERATURE DISTRIBUTION IN TRANSFER CASK
(100 Degrees F Ambient Air)
Revision 2

C06

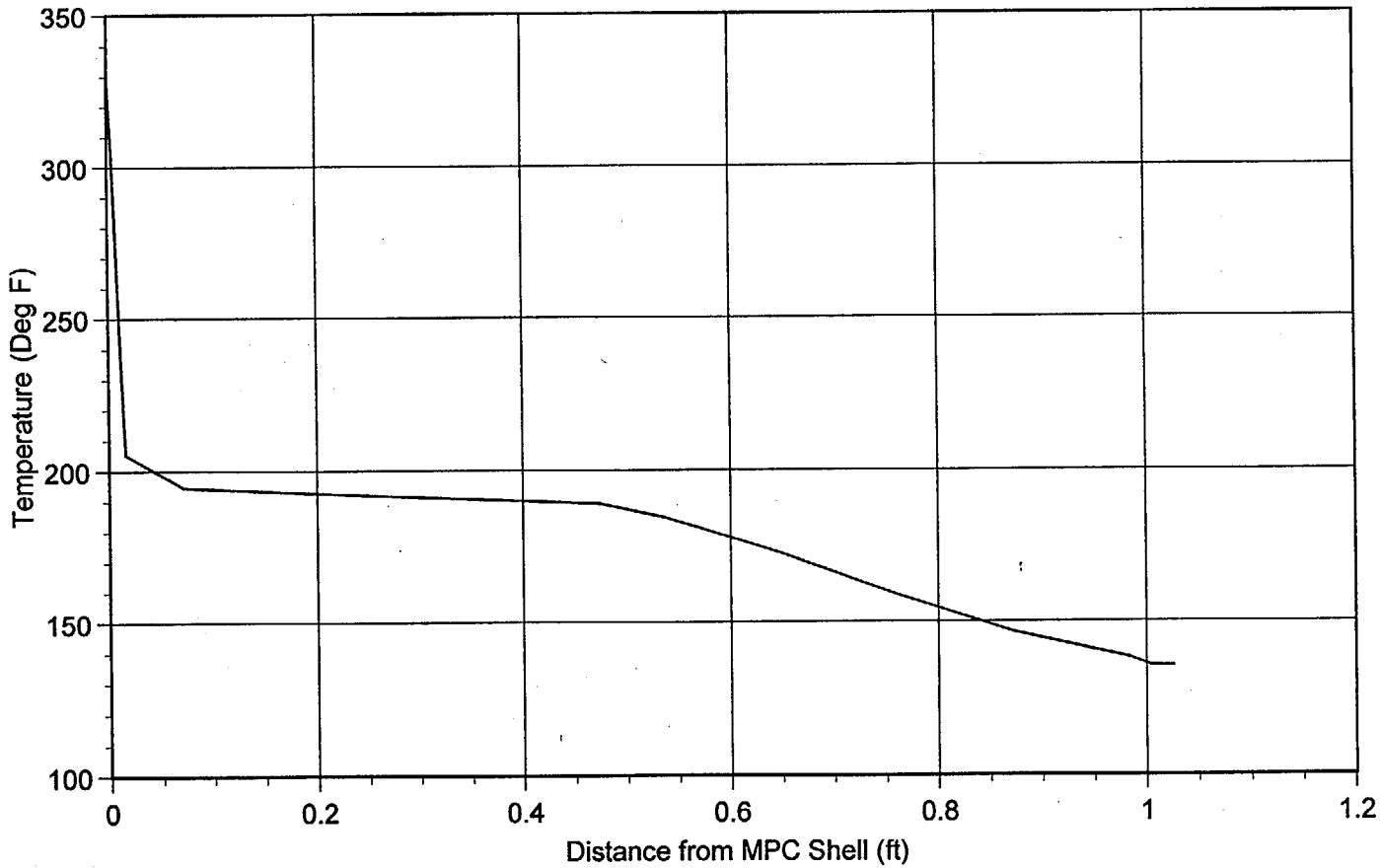

TROJAN ISFSI
SAFETY ANALYSIS REPORT

FIGURE 4.7-11
TRANSFER CASK THROUGH WALL
TEMPERATURE DISTRIBUTION
(75 Degrees F Ambient Air Temperature)
Revision 2

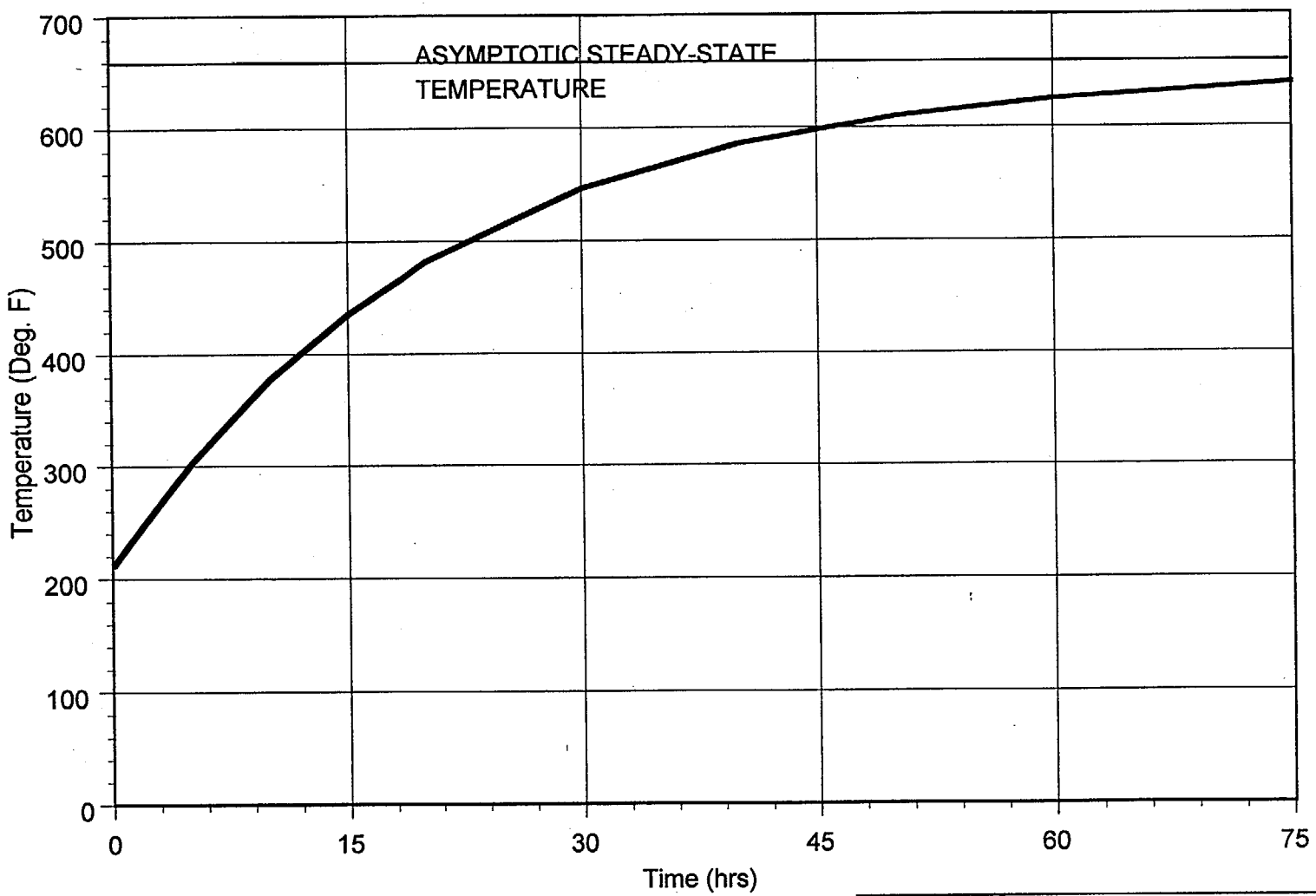

TROJAN ISFSI
SAFETY ANALYSIS REPORT

FIGURE 4.7-12
VACUUM TRANSIENT PEAK CLADDING TEMPERATURE
(Design Maximum Heat Load Q = 17.4kW)
Revision 2

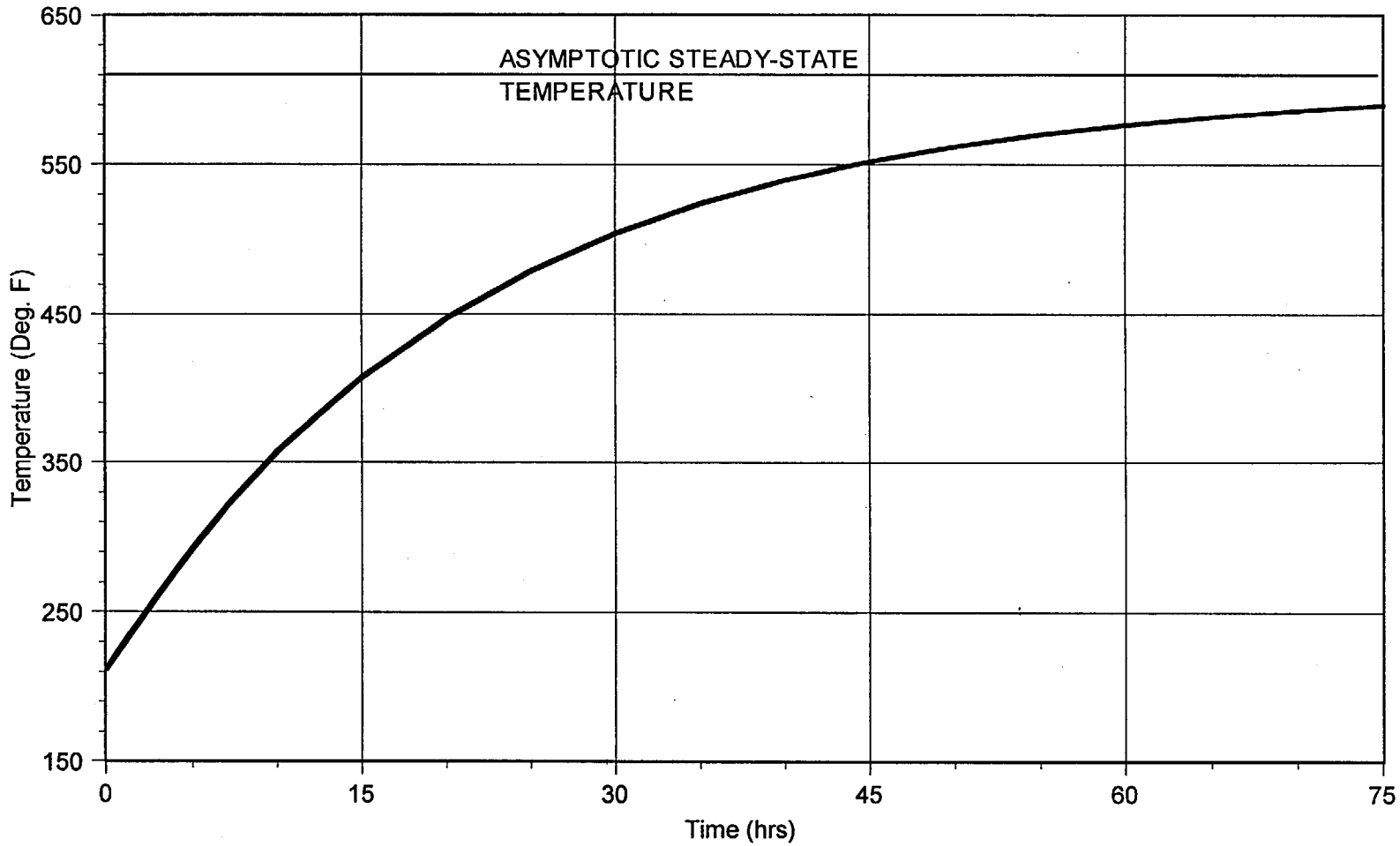

TROJAN ISFSI
SAFETY ANALYSIS REPORT

FIGURE 4.7-13
VACUUM TRANSIENT PEAK CLADDING TEMPERATURE
(Bounding Heat Load Analysis Q = 15kW)

Revision 2