MRP-2017-004

ELECTRIC POWER RESEARCH INSTITUTE

January 18, 2017

TO: Recipients of EPRI Technical Report 3002005349, October 2015

FROM: EPRI Publishing

SUBJECT: Transmittal of Corrections to EPRI Report 3002005349, *Materials Reliability Program: Pressurized Water Reactor Internals Inspection and Evaluation Guidelines (MRP-227, Revision 1)*

Our records indicate that you downloaded the subject EPRI report prior to January 17, 2017. Errors were found in the originally published report released October 2015. Pages 3-8, 3-9, 3-29, 4-19, 4-20, 4-28, 4-29, and 4-47 through 4-68 need to be updated in your version of the subject report.

The two tables listed below detail the original figure callouts and the corrected figure callouts for Table 4.2 (pages 4-19 and 4-20) and Table 4.5 (pages 4-28 and 4-29).

MRP-227 Revision 1 Figure call-out errors identified in Table 4.2			
Entry	**Page Number**	**Erroneous call-out**	**Corrected call-out**
C8.	4-19	4-31	4-36
C9.	4-19	4-31	4-28
C10.	4-20	4-32	4-31
C11.	4-20	4-33	4-32
C12.	4-20	4-34	4-33

MRP-227 Revision 1 Figure call-out errors identified in Table 4.5			
Entry	**Page Number**	**Erroneous call-out**	**Corrected call-out**
C1.2	4-28	4-35	4-34
C5.1	4-28	4-29	4-29 and 4-30
C5.4	4-28	4-36	4-35
C1.1	4-29	4-37	4-36
C2.1	4-29	4-38	4-26
C3.1/3.2	4-29	4-38	4-37
C11.1	4-29	4-33	4-32

On page 3-29, Table 3-3 (continued) the text refers to "Core Barrel Assembly." The proper heading should be "Alignment and Interfacing Components." Also, the component titled "Clevis Insert Bolts" which was present for previous revisions of MRP-227 is missing and should be added along with its disposition results.

On pages 3-8 (Figure 3-3), 3-9 (Figure 3-4) and 4-47 through 4-68 (Figures 4-11 through Figure 4-37), the figure captions have been modified to improve clarity. These are general representations of the internals components, and the word 'typical' has been added to the beginning of each figure caption.

To support this improvement in clarity, the following text has also been added to pages 4-47 through 4-68 to describe the intent of the figures.

> "Note: Figure intended to represent the component features and relative position to other portions of the structure and system. Figure does not contain or transmit design information and is not meant to be used for performing engineering assessments, evaluations, or examinations."

Modified pages 3-8, 3-9, 3-29, 4-19, 4-20, 4-28, 4-29, and 4-47 through 4-68 have been replaced in the downloadable file on EPRI.com that now includes this erratum. The file is available at:

http://www.epri.com/abstracts/Pages/ProductAbstract.aspx?ProductId=000000003002005349

We apologize for any inconvenience these errors may have caused.

Sincerely,

EPRI Publishing

PALO ALTO OFFICE
3420 Hillview Avenue, Palo Alto, CA 94304-1338 USA • 650.855.2000 • Customer Service 800.313.3774 • www.epri.com

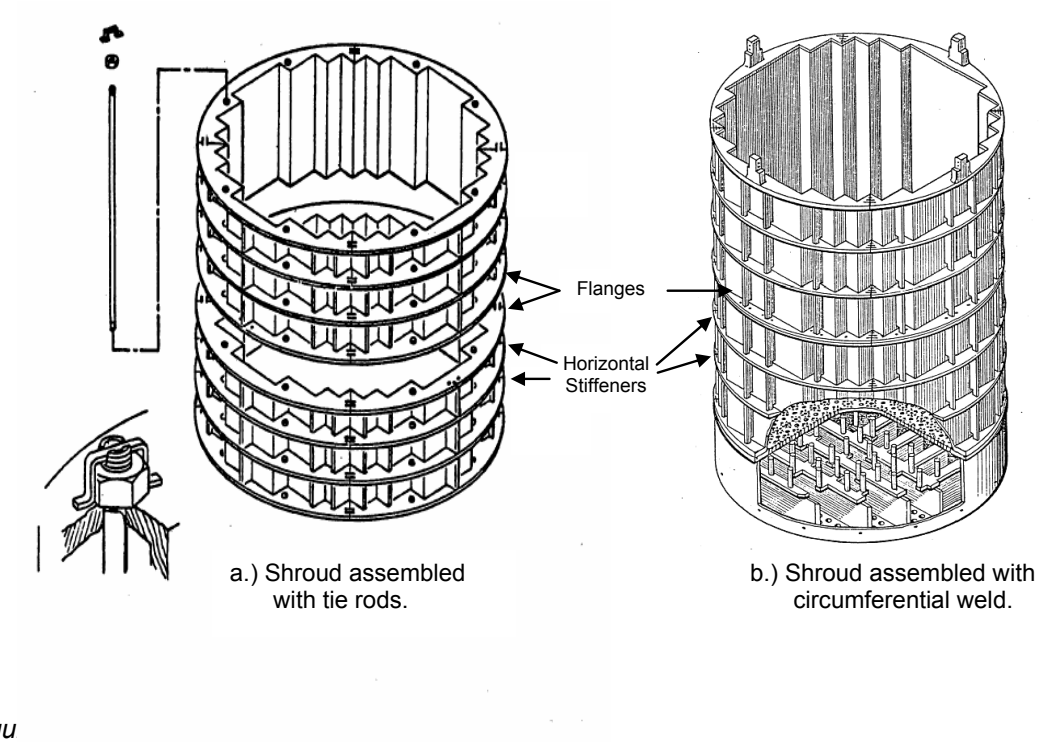

Figu
Typical CE Welded Core Shroud Designs Assembled in Two Vertical Sections (with Top-Mounted ICI)

In-Core Instrumentation Support System

The in-core instrumentation support system consists of in-core instrumentation guide tubes and components which provide support to the in-core instrumentation.

For plants with top-entry in-core instrumentation assemblies, the in-core instrumentation is inserted through the reactor vessel head through a nozzle into a guide tube. The guide tubes interface with the thimble support plate, which is perforated to fit over the control element assembly extension shaft guides, with a connection to the upper guide structure support plate. ICI thimble tube assemblies extend downward from a flanged connection at the thimble support plate (in the original design) through the fuel alignment plate and into the reactor core. The upper portion of the ICI thimble tube exists between the thimble support plate and fuel alignment plate, while the lower ICI thimble tube is the zirconium alloy portion that extends into the fuel assemblies.

For plants with bottom-entry in-core instrumentation, the guide tubes are connected to and supported by the lower internals assembly, from which the in-core instrumentation enters the core.

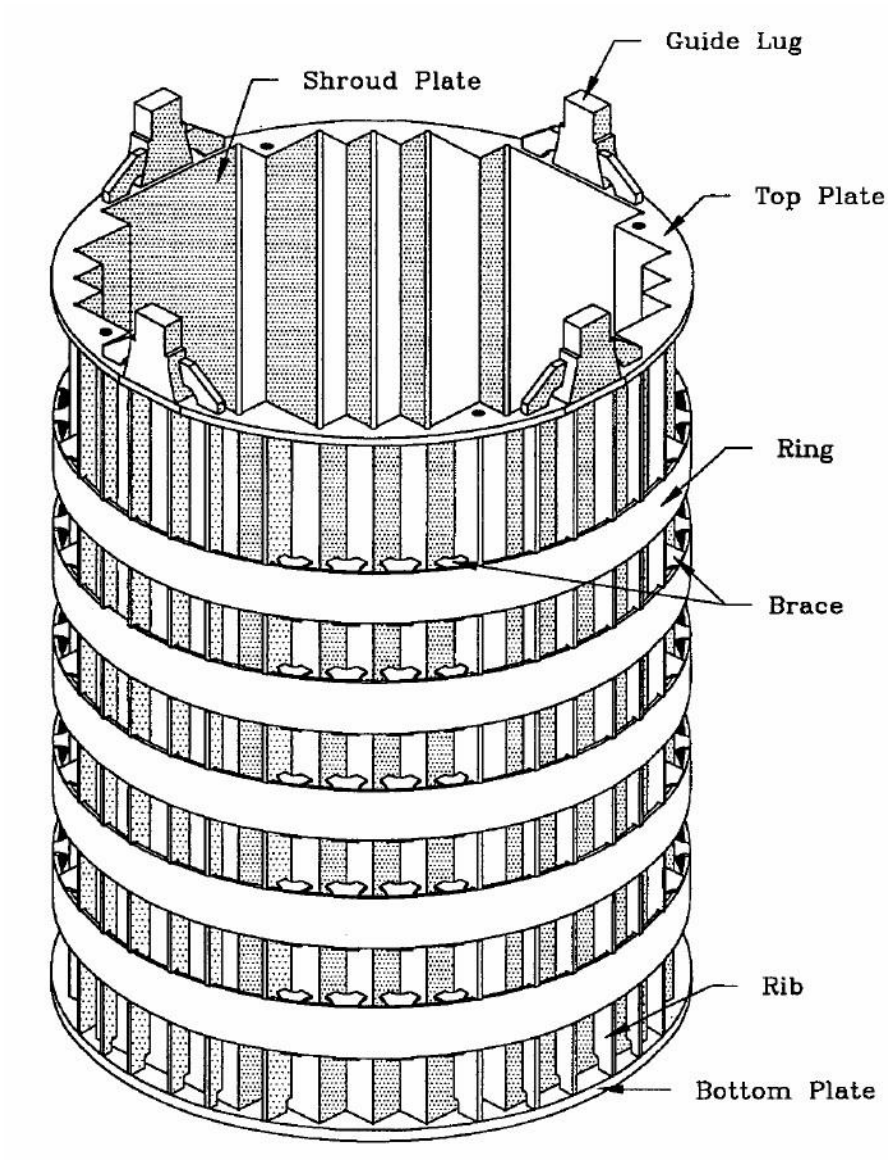

Figure 3-4
Typical CE Welded Core Shroud with Full Height Panels (with Bottom-Mounted ICI)

3.1.3 Westinghouse Internals Design Characteristics

A schematic view of a typical set of Westinghouse-designed PWR internals is shown in Figure 3-5. However, because of the significant variation in design characteristics, the operating Westinghouse PWRs in the U.S. are sub-divided into various groups, starting with the number of reactor coolant system (RCS) loops – two-loop, three-loop, and four-loop configurations. Other significant variations include the original thermal output, the baffle-barrel region flow design (downflow, upflow, and converted upflow), and upper support plate configuration. A complete set of these groups is provided in Section 4 of Reference 10.

Table 3-3 (cont.)
Final Disposition of Westinghouse Internals

Component	Material	Initial Category	SCC	IASCC	Wear	Fatigue	TE (Note 1)	IE (Note 1)	VS	ISR and IC	Final Group
Alignment and Interfacing Components											
Internals Hold Down Spring (Note 4)	304 SS	B	A	A	P	A	A	A	A	A	P
Upper Core Plate Alignment Pins	304 SS	B	X	A	X	A	A	A	A	A	X
Clevis Insert Bolts	Alloy X-750	B	A	A	X	A	A	A	A	A	X

Notes to Table 3-3:

1. The significance of thermal and irradiation embrittlement is directly related to the probability of a flaw existing in the component. There are no recommendations for inspection to determine embrittlement level because these mechanisms cannot be directly observed. However, potential embrittlement must be considered in flaw tolerance evaluations.
2. Some of the items in the control rod guide tube (CRGT) assembly, namely the C-tubes and sheaths, have been placed in the No Additional Measures group, because decisions on remediation of wear and degradation in the CRGT assembly will be based only on the conditions detected in the Primary CRGT item, the guide tubes (cards).
3. The concern is a result of the collective interaction of all components that comprise the assembly and not strictly focused on the plates.
4. The hold-down spring does not directly degrade by wear. It first degrades by loss in preload, which leads to wear when an inadequate preload remains.
5. Upgraded to "Expansion" from "No Additional Measures" in accordance with the NRC SER [29].
6. Upgraded to "Primary" from "Expansion" in accordance with the NRC SER [29].

Table 4-2 (cont.)
CE Plants Primary Components

Primary Item	Applicability	Effect (Mechanism)	Expansion Link (Note 1)	Examination Method/Frequency (Note 1)	Examination Coverage
C7.Core Support Barrel Assembly CSB Flexure Weld (CSBFW)	All plants with welded core shrouds	Cracking (Fatigue, SCC)	None	If screening for fatigue cannot be satisfied by plant-specific evaluation, perform enhanced visual (EVT-1) examination, no later than 2 refueling outages from the beginning of the license renewal period. Subsequent examination on a ten-year interval.	Examination coverage to be defined by evaluation to determine the potential location and extent of fatigue cracking. See Figure 4-30.
C8.Lower Support Structure Core support columns	Plants with full-height bolted or half-height welded core shroud plates	Cracking (SCC, IASCC, Fatigue including damaged or fractured material) Aging Management (IE, TE)	None	Visual (VT-3) examination no later than 2 refueling outages from the beginning of the license renewal period. Subsequent examinations on a ten-year interval.	Plants with full height bolted core shroud plates: 25% of column assemblies as visible using a VT-3 examination from above the lower core plate. Plants with core shrouds assembled in two vertical sections: 100% of the accessible surfaces of the core support column welds, from the top side of the core support plate (Note 3). See Figure 4-36.
C9.Lower Support Structure Core support plate	All plants with a core support plate	Cracking (Fatigue) Aging Management (IE)	None	If screening for fatigue cannot be satisfied by plant-specific evaluation, enhanced visual (EVT-1) examination, no later than 2 refueling outages from the beginning of the license renewal period. Subsequent examination on a ten-year interval.	Examination coverage to be defined by evaluation to determine the potential location and extent of fatigue cracking. See Figure 4-28

Table 4-2 (cont.)
CE Plants Primary Components

Primary Item	Applicability	Effect (Mechanism)	Expansion Link (Note 1)	Examination Method/Frequency (Note 1)	Examination Coverage
C10.Upper Internals Assembly Fuel alignment plate	Only plants with welded core shrouds assembled with full-height shroud plates	Cracking (Fatigue), Aging management (IE)	None	If screening for fatigue cannot be satisfied by plant-specific evaluation, enhanced visual (EVT-1) examination, no later than 2 refueling outages from the beginning of the license renewal period. Subsequent examination on a ten-year interval.	Examination coverage to be defined by evaluation to determine the potential location and extent of fatigue cracking. See Figure 4-31.
C11.Control Element Assembly Instrument guide tubes	All plants with instrument guide tubes attached to the CEA shroud assemblies	Cracking (SCC, Fatigue) that results in missing supports or separation at the welded joint between the tubes and supports	Remaining instrument guide tubes within the CEA shroud assemblies	Visual (VT-3) examination, no later than 2 refueling outages from the beginning of the license renewal period. Subsequent examination on a ten-year interval.	100% of instrument guide tubes in peripheral CEA shroud assemblies (i.e., those adjacent to the perimeter of the fuel alignment plate), focusing on the supports and the connecting welds between the supports and the guide tube and CEA shroud. See Figure 4-32.
C12.Lower Support Structure Deep beams	Only plants with welded core shrouds assembled with full-height shroud plates	Cracking (Fatigue) that results in a detectable surface-breaking indication in the welds or beams. Aging Management (IE)	None	Enhanced visual (EVT-1) examination, no later than 2 refueling outages from the beginning of the license renewal period. Subsequent examination on a ten-year interval, if adequacy of remaining fatigue life cannot be demonstrated.	Examine 25% of the total number of beam-to-beam welds. Coverage on each weld includes the top four inches of the weld in the vertical orientation. See Figure 4-33.

Notes to Table 4-2:

1. Examination acceptance criteria and expansion criteria for the CE components are in Table 5-2.
2. A minimum of 75% of the total core shroud bolts population (examined + unexamined), including coverage consistent with the Expansion criteria in Table 5-2, must be examined for inspection credit.
3. A minimum of 25% of the total population of core support column welds
4. If evidence of distortion is detected by visual exam, consideration should be given to making supplementary measurements (minimum of 3 to 5, depending on extent of observed condition) of gap opening between the upper and lower core shroud segments.
5. Examination coverage requires a minimum of 25% of the circumference of either the ID or the OD of the weld.
6. The stated coverage requirement is the minimum if no significant indications are found. However the Examination Acceptance criteria in Section 5 require that additional coverage must be achieved in the same outage if significant flaws are found. This contingency should be considered for inspection planning purposes.

Table 4-5
CE Plants Expansion Components

Expansion Item	Applicability	Effect (Mechanism)	Primary Link (Note 1)	Examination Method/Frequency (Note 1)	Examination Coverage
Core Shroud Assembly (Bolted) C1.2.Barrel-shroud bolts	Bolted plant designs	Cracking (IASCC, Fatigue) Aging Management (IE and ISR)	C1.Core shroud bolts	Volumetric (UT) examination. Re-inspection every 10 years following initial inspection.	100% of accessible barrel-shroud bolts or as supported by plant-specific justification. See Figure 4-34.
Core Support Barrel Assembly C5.1.Lower Girth Weld (LGW)	All plants	Cracking (SCC, Fatigue)	C5.Upper Flange Weld (UFW)	Enhanced visual (EVT-1) examination. Re-inspection every 10 years following initial inspection.	A minimum of 75% of the OD circumferential of the LGW and adjacent base metal shall be examined. See Figures 4-29 and 4-30.
Core Support Barrel Assembly C5.2.Upper Girth Weld (UGW) and C5.3.Upper Axial Weld (UAW)	All plants	Cracking (SCC) Aging Management (IE)	C5.Upper Flange Weld (UFW)	Enhanced visual (EVT-1) examination. Re-inspection every 10 years following initial inspection.	A minimum of 75% of the OD circumference of the UGW and UAW and adjacent base metal shall be examined. See Figure 4-29.
Lower Support Structure C5.4.Lower core support beams	All plants except those with welded core shrouds assembled with full-height shroud plates	Cracking (SCC, Fatigue) including damaged or fractured material	C5.Upper Flange Weld (UFW)	Enhanced visual (EVT-1) examination. Re-inspection every 10 years following initial inspection.	25% of welds and adjacent base metal or locations as justified by plant-specific evaluation. See Figure 4-35.
Core Support Barrel Assembly C6.1.Middle Axial Weld (MAW), C6.2.Lower Axial Weld (LAW)	All plants	Cracking (SCC, IASCC) Aging Management (IE)	C6.Middle Girth Weld (MGW)	Enhanced visual (EVT-1) examination Re-inspection every 10 years following initial inspection.	A minimum of 75% of the OD circumference of the MAW and LAW and adjacent base metal shall be examined. See Figure 4-29.

Table 4-5 (cont.)
CE Plants Expansion Components

Expansion Item	Applicability	Effect (Mechanism)	Primary Link (Note 1)	Examination Method/Frequency (Note 1)	Examination Coverage
Core Shroud Assembly (Bolted) C1.1.Core support column bolts	Bolted plant designs	Cracking (IASCC, Fatigue) Aging Management (IE)	C1.Core shroud bolts	Ultrasonic (UT) examination. Re-inspection every 10 years following initial inspection.	100% (or as supported by plant-specific analysis) of core support column bolts (Minimum of 75% of the total population). See Figure 4-36.
Core Shroud Assembly (Welded) C2.1.Remaining axial welds	Plant designs with core shrouds assembled in two vertical sections	Cracking (IASCC), Aging Management (IE)	C2.Core shroud plate-former plate weld	Enhanced visual (EVT-1) examination. Re-inspection every 10 years following initial inspection.	75% of the remaining axial weld length and adjacent base metal as visible from the core side of the shroud other than that already inspected under the primary link. See Figure 4-26.
Core Shroud Assembly (Welded) C3.1.Remaining axial welds, C3.2.Ribs and rings	Only plants with welded core shrouds assembled with full-height shroud plates	Cracking (IASCC), Aging Management (IE)	C3.Shroud plates of welded core shroud assemblies	Enhanced visual (EVT-1) examination. Re-inspection every 10 years following initial inspection.	75% of the remaining axial weld length and adjacent base metal as visible from the core side of the shroud other than that already inspected under the primary link. 25% of the ribs and rings. See Figure 4-37.
Control Element Assembly C11.1.Remaining instrument guide tubes	All plants with instrument guide tubes in the CEA shroud assembly	Cracking (SCC, Fatigue) that results in missing supports or separation at the welded joint between the tubes and supports.	C11.Peripheral instrument guide tubes within the CEA shroud assemblies	Visual (VT-3) examination. Re-inspection every 10 years following initial inspection.	100% of tubes in CEA shroud assemblies (minimum of 75% of the total population of remaining instrument guide tubes) focusing on the supports and the connecting welds between the supports and the guide tube and CEA shroud. See Figure 4-32.

Notes to Table 4-5:
1. Examination acceptance criteria and expansion criteria for the CE components are in Table 5-2.
2. Examination coverage requires examination of either the ID or the OD of the weld.

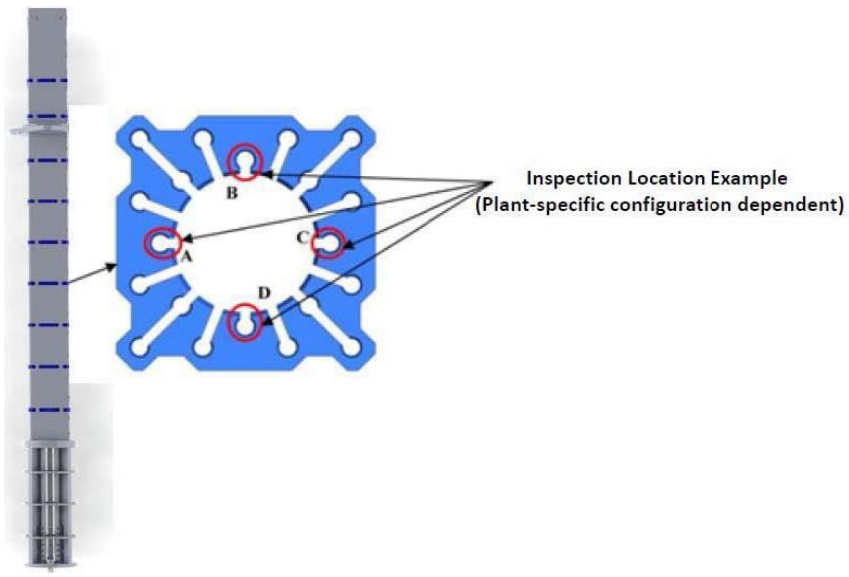

*Figure 4-11**
Typical Westinghouse-Design Control Rod Guide Tube Assembly Guide Plates (Cards)

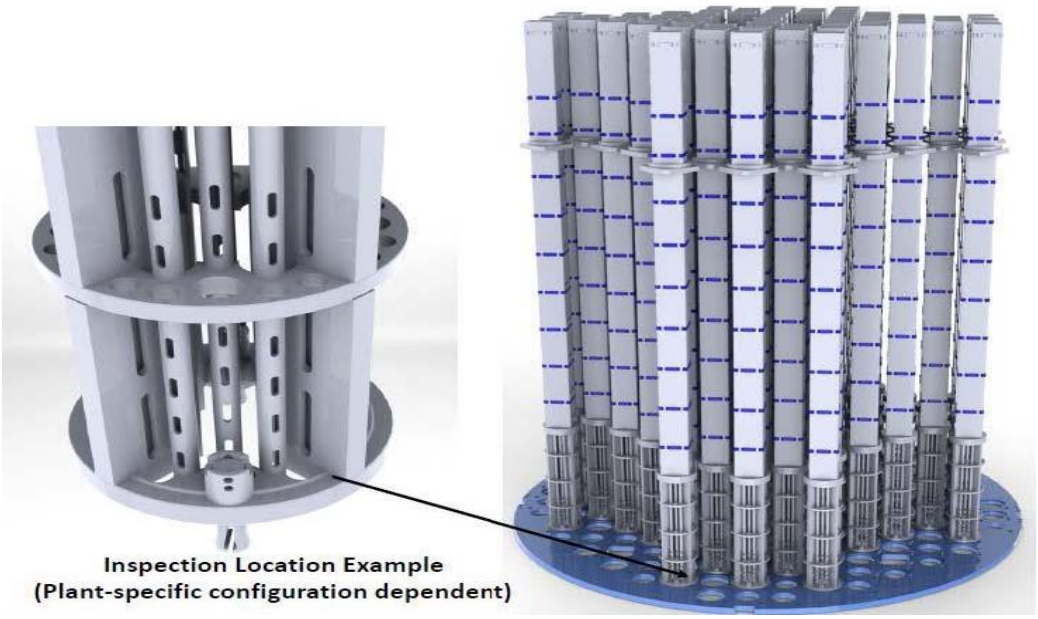

*Figure 4-12**
Typical Westinghouse-Design Control Rod Guide Tube Assembly Lower Flange Welds

* Note: Figure intended to represent the component features and relative position to other portions of the structure and system. The figures do not contain or transmit design information and are not meant to be used for performing engineering assessments, evaluations, or examinations.

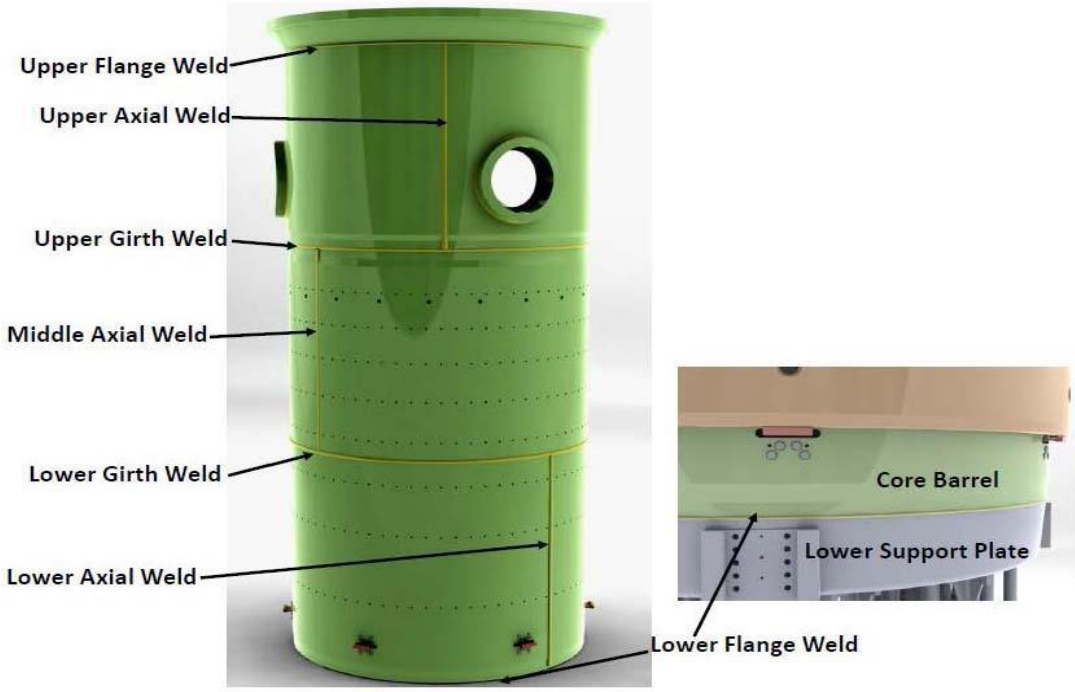

*Figure 4-13**
Typical Westinghouse-Design Core Barrel Assembly Core Barrel Welds

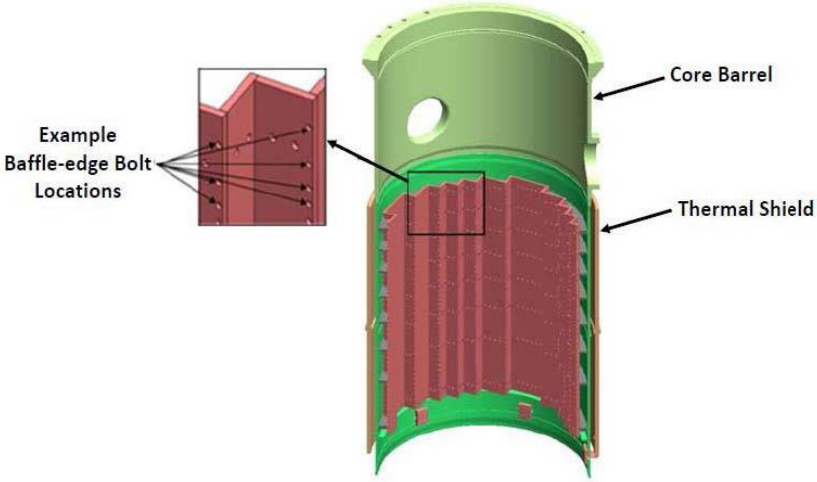

*Figure 4-14**
Typical Westinghouse-Design Baffle-Former Assembly Baffle-Edge Bolts

* Note: Figure intended to represent the component features and relative position to other portions of the structure and system. Figure does not contain or transmit design information and is not meant to be used for performing engineering assessments, evaluations, or examinations.

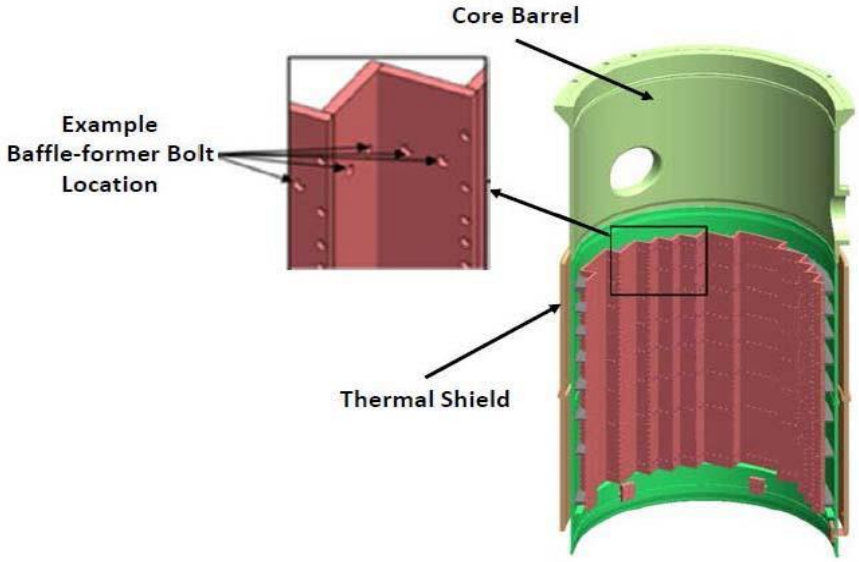

*Figure 4-15**
Typical Westinghouse-Design Baffle-Former Assembly Baffle-Former Bolts

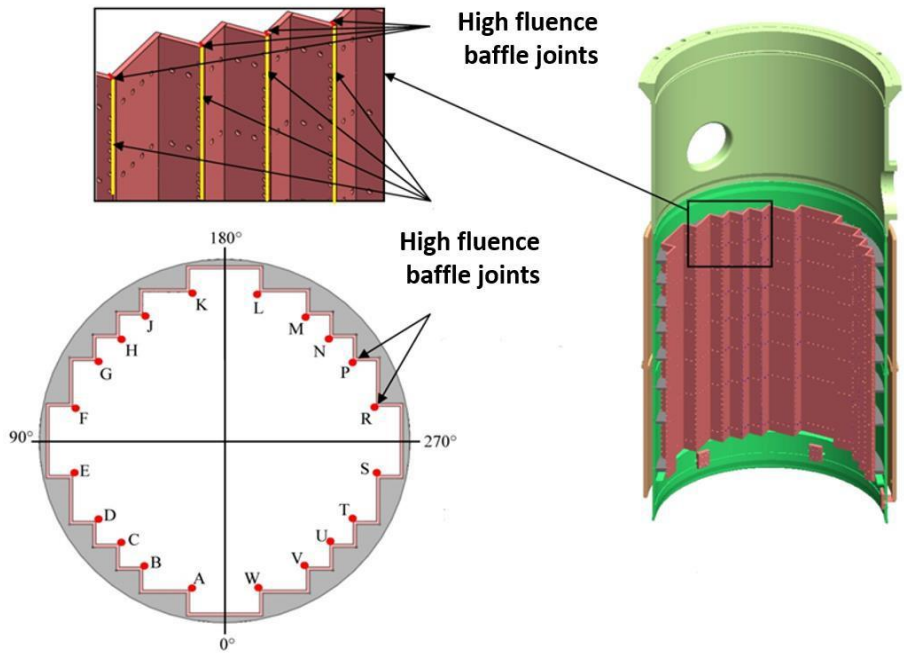

*Figure 4-16**
Typical Westinghouse-Design Baffle-Former Assembly

* Note: Figure intended to represent the component features and relative position to other portions of the structure and system. Figure does not contain or transmit design information and is not meant to be used for performing engineering assessments, evaluations, or examinations.

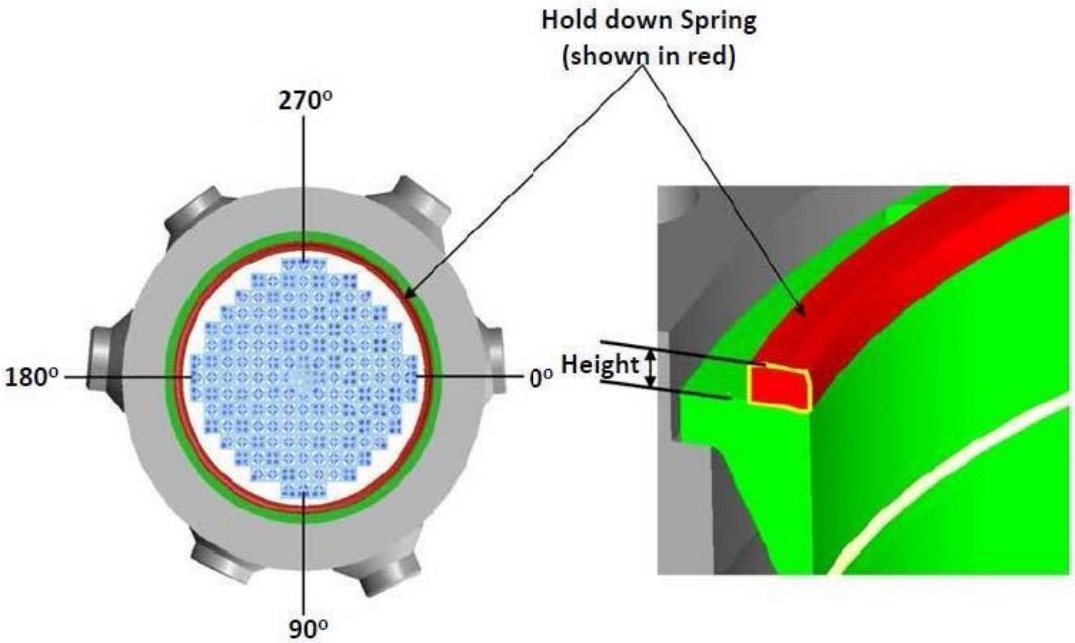

Figure 4-17
Typical Westinghouse-Design Alignment and Interfacing Components Internals Hold Down Spring

Note: Figure intended to represent the component features and relative position to other portions of the structure and system. Figure does not contain or transmit design information and is not meant to be used for performing engineering assessments, evaluations, or examinations.

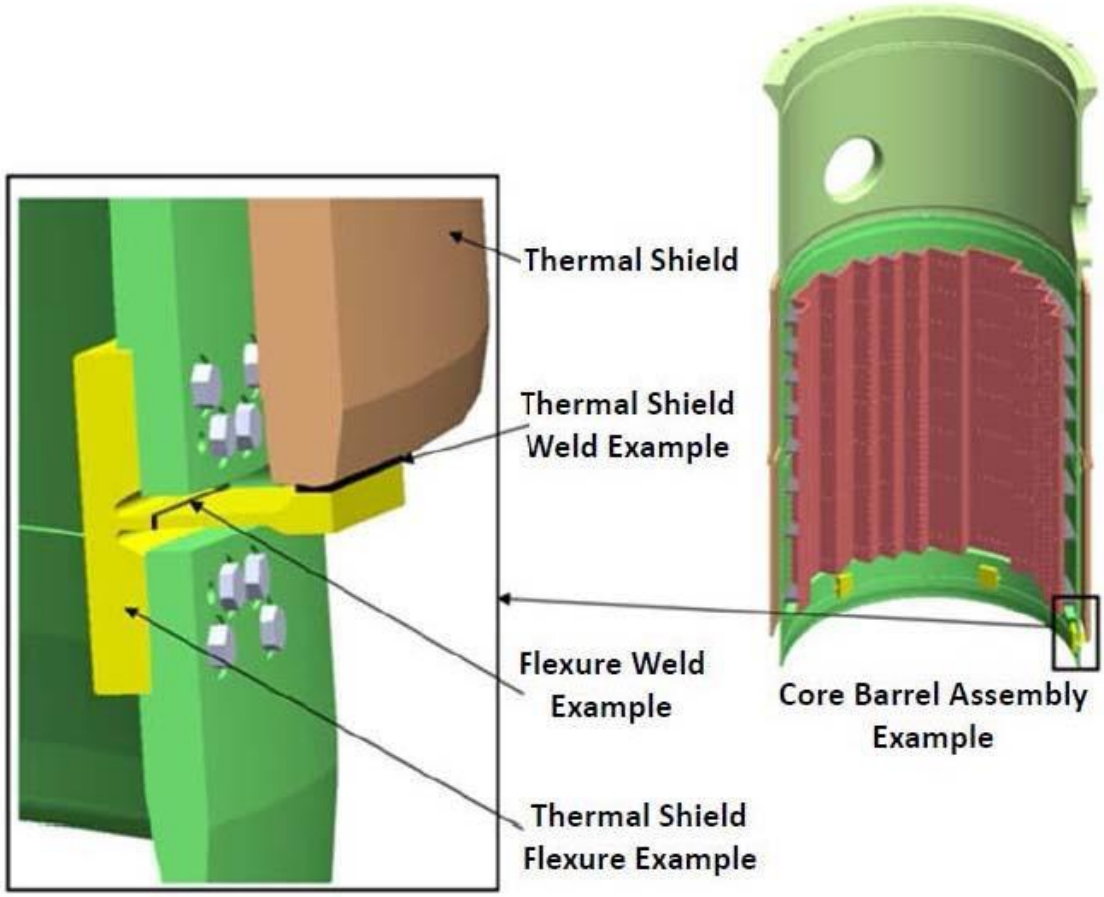

Figure 4-18
Typical Westinghouse-Design Thermal Shield Assembly Thermal Shield Flexures

Note: Figure intended to represent the component features and relative position to other portions of the structure and system. Figure does not contain or transmit design information and is not meant to be used for performing engineering assessments, evaluations, or examinations.

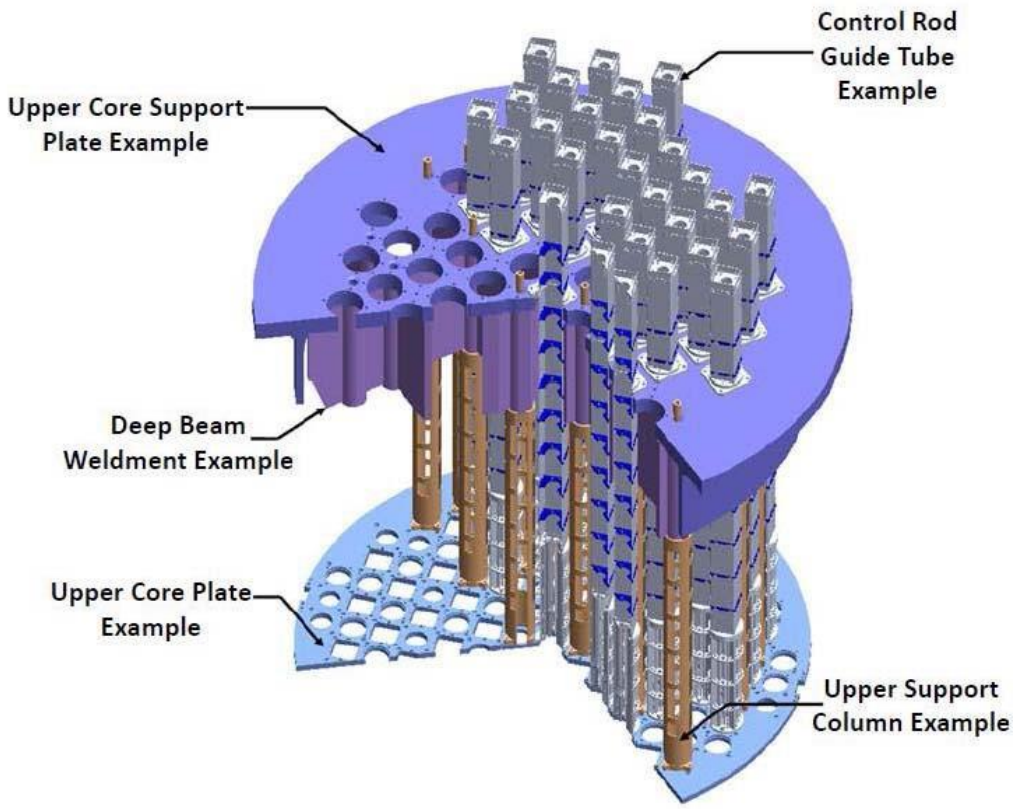

Figure 4-19
Typical Westinghouse-Design Upper Internals Assembly Upper Core Plate

Note: Figure intended to represent the component features and relative position to other portions of the structure and system. Figure does not contain or transmit design information and is not meant to be used for performing engineering assessments, evaluations, or examinations.

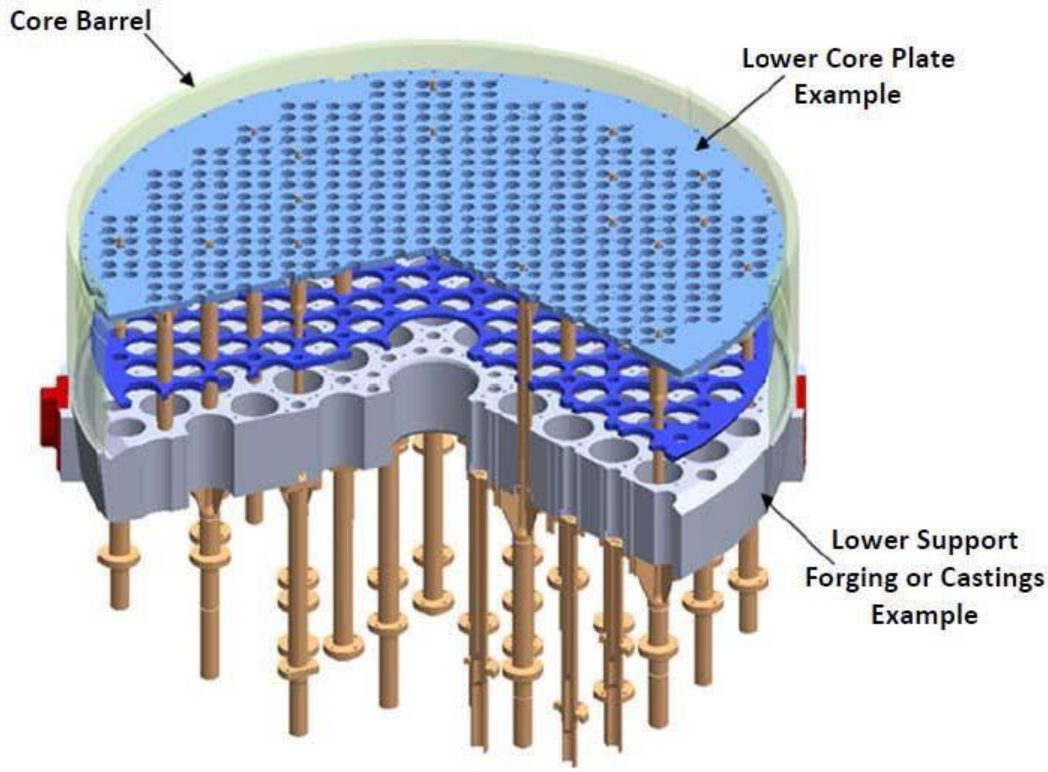

Figure 4-20
Typical Westinghouse-Design Lower Internals Assembly Lower Support Forging or Castings

Note: Figure intended to represent the component features and relative position to other portions of the structure and system. Figure does not contain or transmit design information and is not meant to be used for performing engineering assessments, evaluations, or examinations.

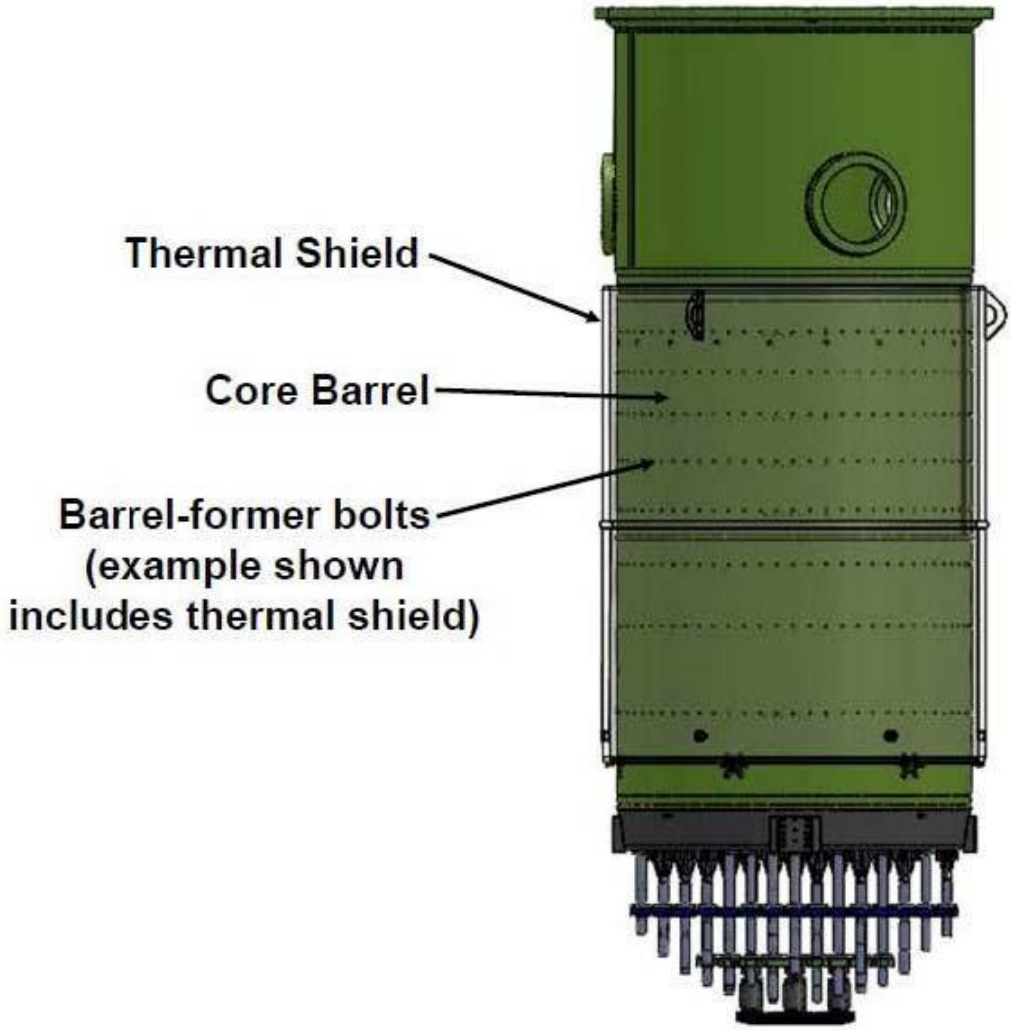

Figure 4-21
Typical Westinghouse-Design Core Barrel Assembly Barrel-former Bolts

Note: Figure intended to represent the component features and relative position to other portions of the structure and system. Figure does not contain or transmit design information and is not meant to be used for performing engineering assessments, evaluations, or examinations.

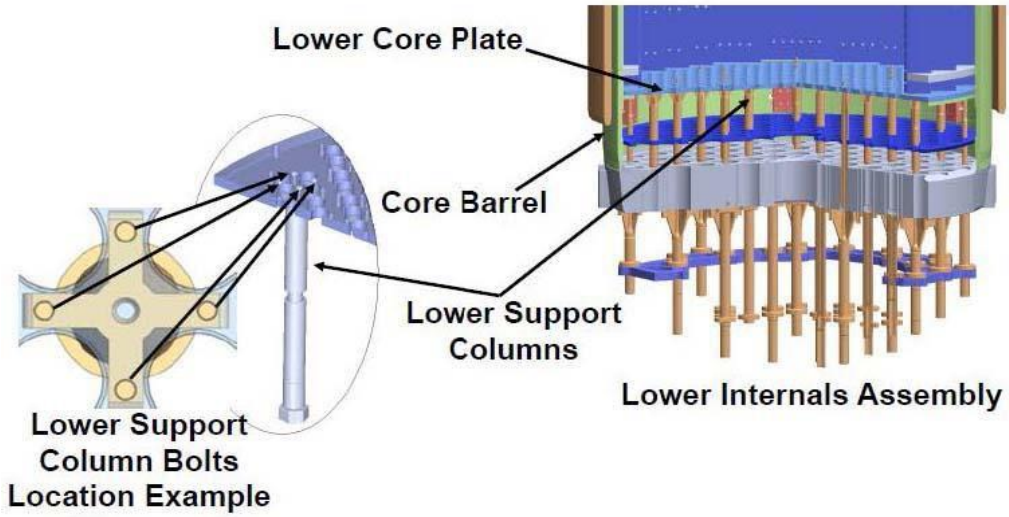

*Figure 4-22**
Typical Westinghouse-Design Lower Support Assembly Lower Support Column Bolts

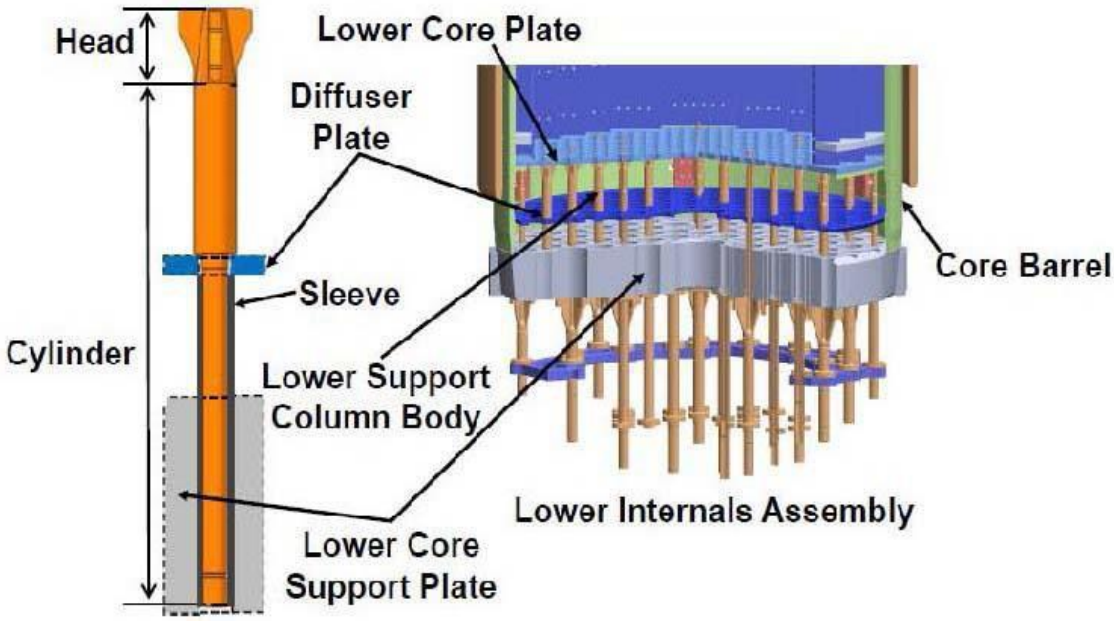

*Figure 4-23**
Typical Westinghouse-Design Lower Support Assembly Lower Support Column Bodies (Cast and Non-Cast)

* Note: Figure intended to represent the component features and relative position to other portions of the structure and system. Figure does not contain or transmit design information and is not meant to be used for performing engineering assessments, evaluations, or examinations.

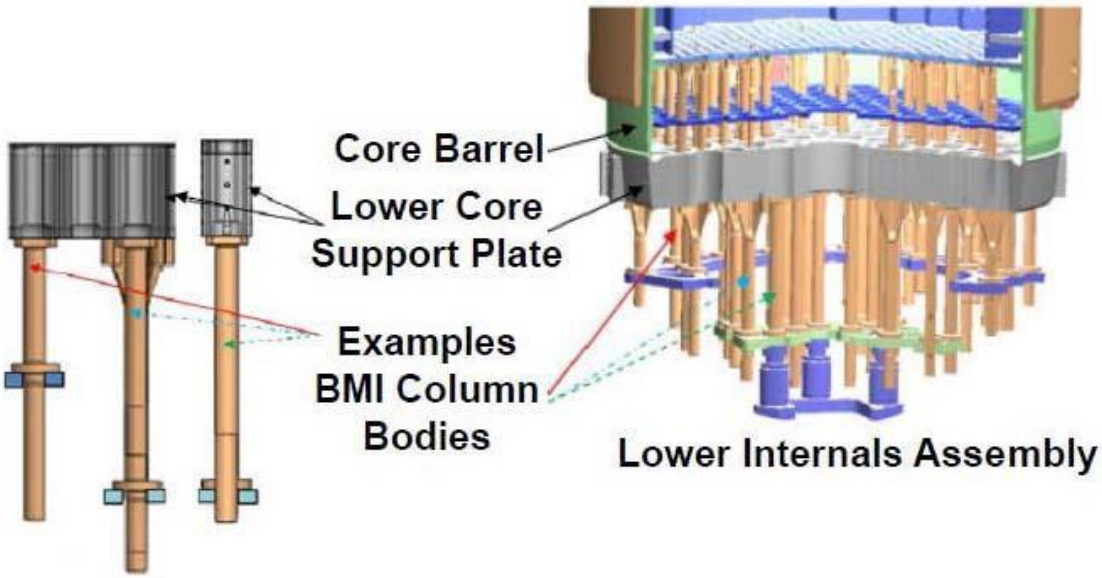

Figure 4-24
Typical Westinghouse-Design Lower Support Assembly Bottom-mounted Instrumentation (BMI) Column Bodies

Note: Figure intended to represent the component features and relative position to other portions of the structure and system. Figure does not contain or transmit design information and is not meant to be used for performing engineering assessments, evaluations, or examinations.

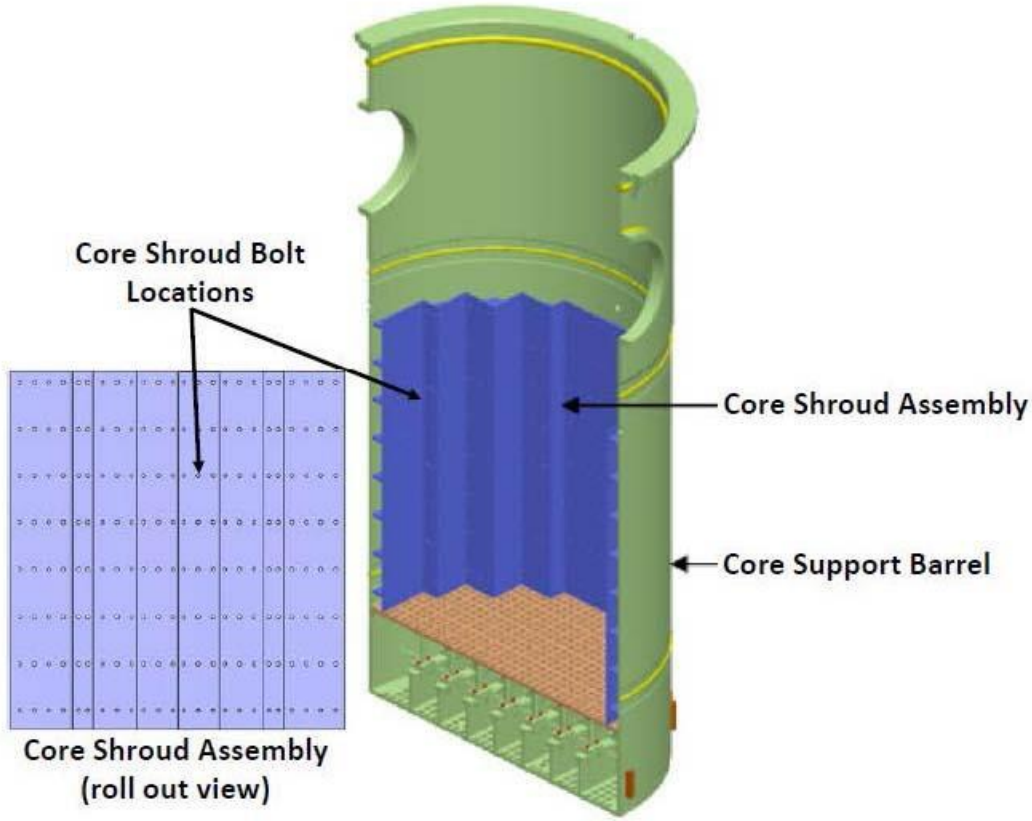

Figure 4-25
Typical CE-Design Core Shroud Assembly (Bolted) Core Shroud Bolts

Note: Figure intended to represent the component features and relative position to other portions of the structure and system. Figure does not contain or transmit design information and is not meant to be used for performing engineering assessments, evaluations, or examinations.

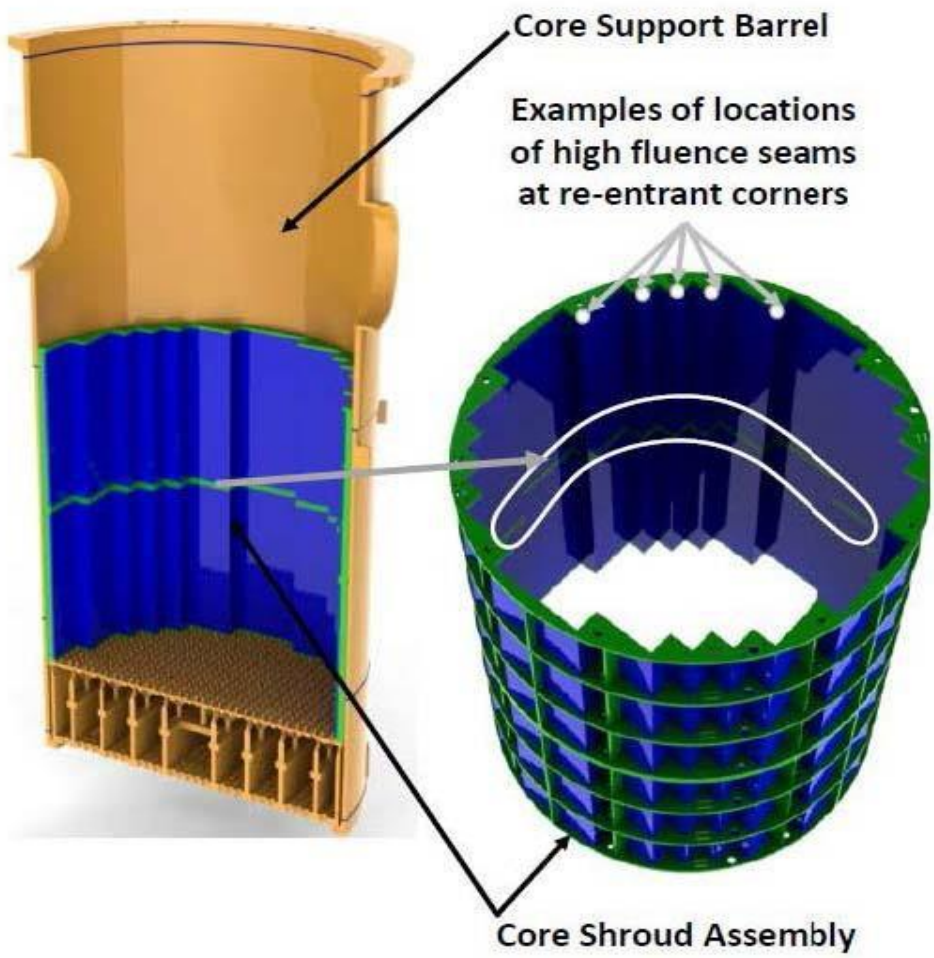

Figure 4-26
Typical CE-Design Core Shroud Assembly (Welded) Assembly and Core Shroud Plate-Former Plate Weld

Note: Figure intended to represent the component features and relative position to other portions of the structure and system. Figure does not contain or transmit design information and is not meant to be used for performing engineering assessments, evaluations, or examinations.

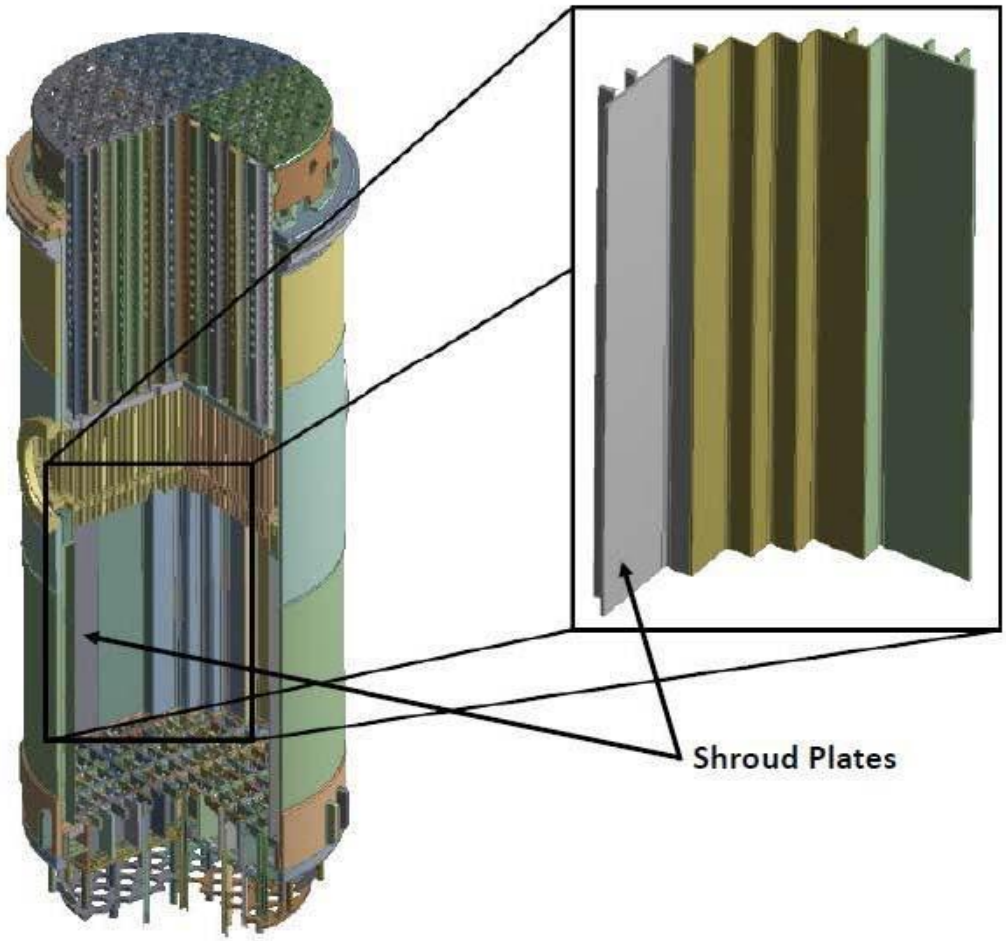

Figure 4-27
Typical CE-Design Core Shroud Assembly (Welded) Shroud Plates

Note: Figure intended to represent the component features and relative position to other portions of the structure and system. Figure does not contain or transmit design information and is not meant to be used for performing engineering assessments, evaluations, or examinations.

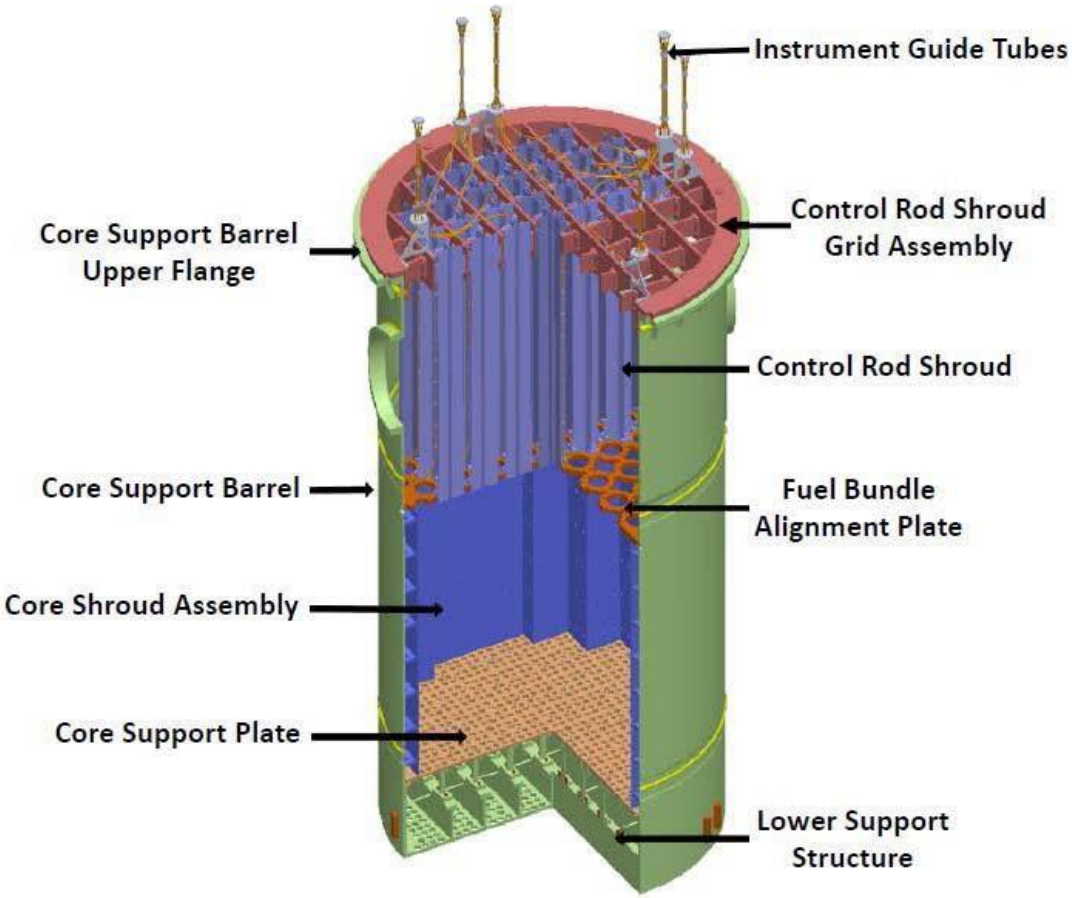

Figure 4-28
Typical CE-Design Core Shroud Assembly (Bolted) Assembly

Note: Figure intended to represent the component features and relative position to other portions of the structure and system. Figure does not contain or transmit design information and is not meant to be used for performing engineering assessments, evaluations, or examinations.

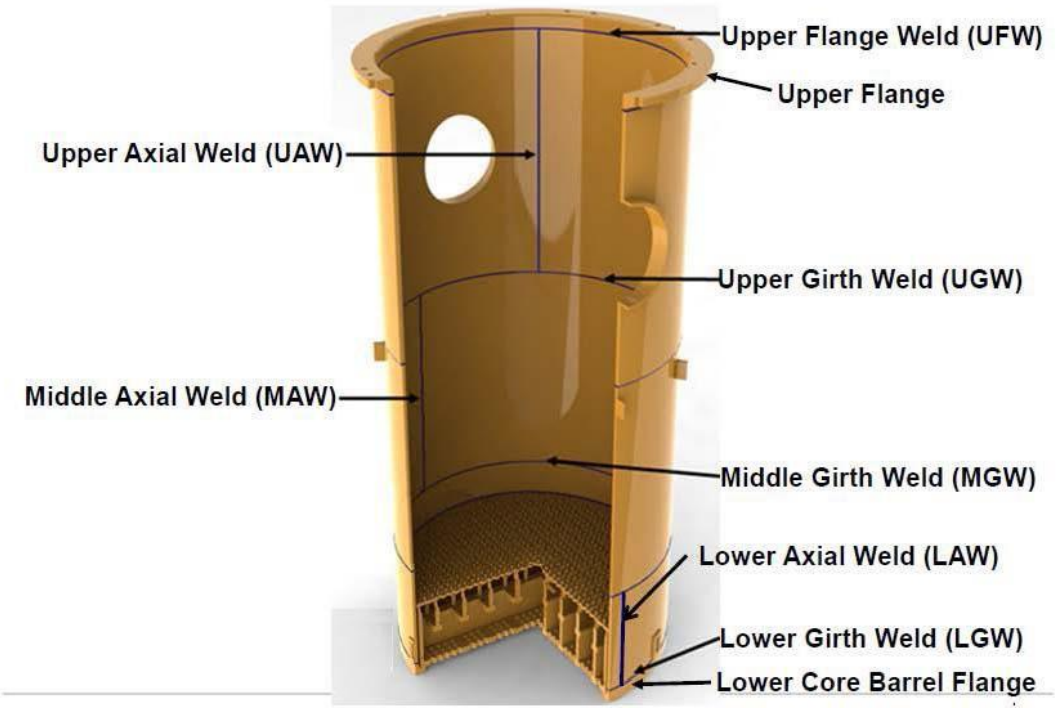

Figure 4-29
Typical CE-Design Core Support Barrel Assembly - Welds, Upper Cylinder (Including Welds), Upper Core Barrel Flange, Core Barrel Assembly Axial Welds, Lower Core Barrel Flange

Note: Figure intended to represent the component features and relative position to other portions of the structure and system. Figure does not contain or transmit design information and is not meant to be used for performing engineering assessments, evaluations, or examinations.

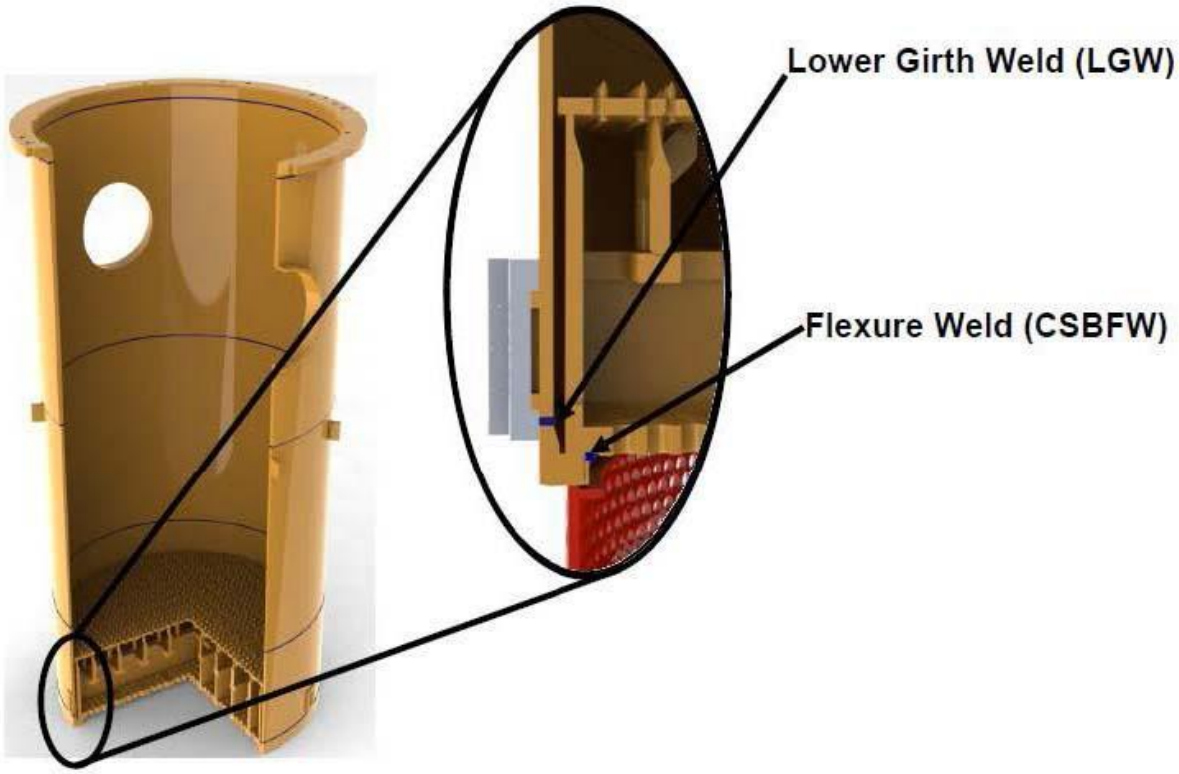

Figure 4-30
Typical CE-Design Core Support Barrel Assembly CSB Flexure Weld (CSBFW)

Note: Figure intended to represent the component features and relative position to other portions of the structure and system. Figure does not contain or transmit design information and is not meant to be used for performing engineering assessments, evaluations, or examinations.

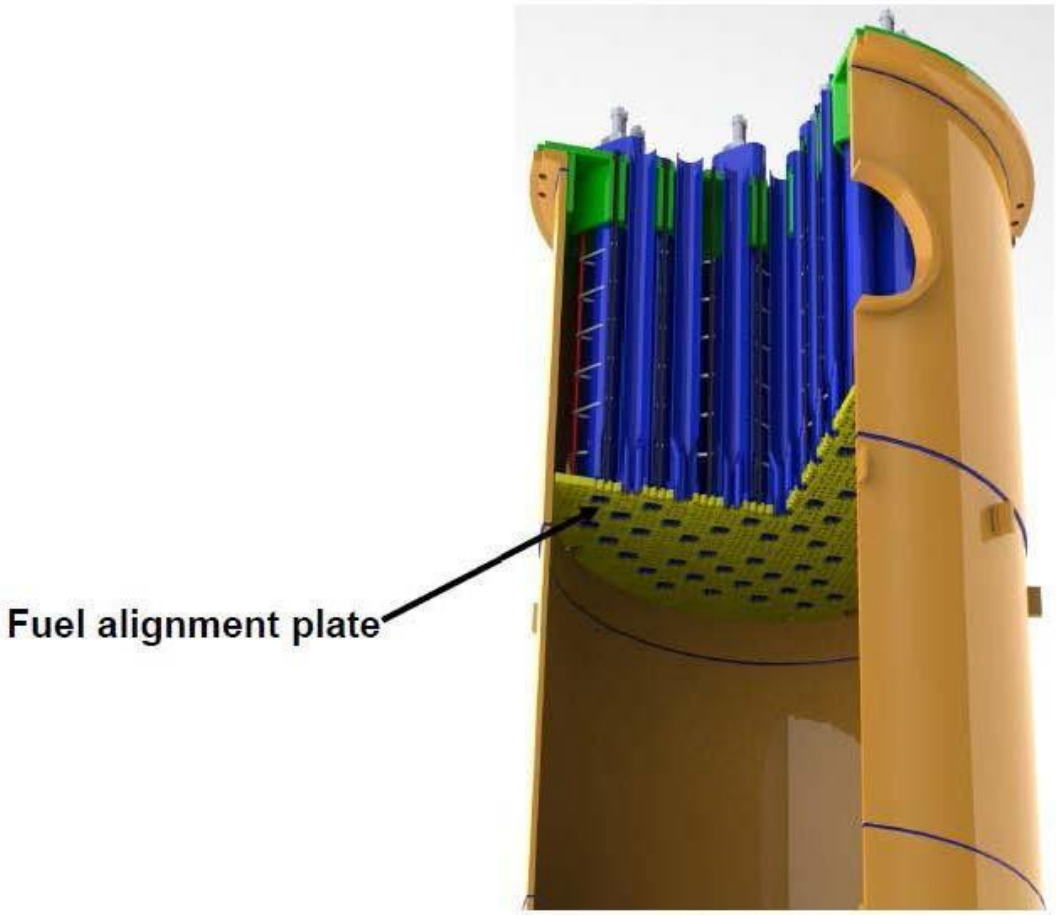

Figure 4-31
Typical CE-Design Upper Internals Assembly Fuel Alignment Plate

Note: Figure intended to represent the component features and relative position to other portions of the structure and system. Figure does not contain or transmit design information and is not meant to be used for performing engineering assessments, evaluations, or examinations.

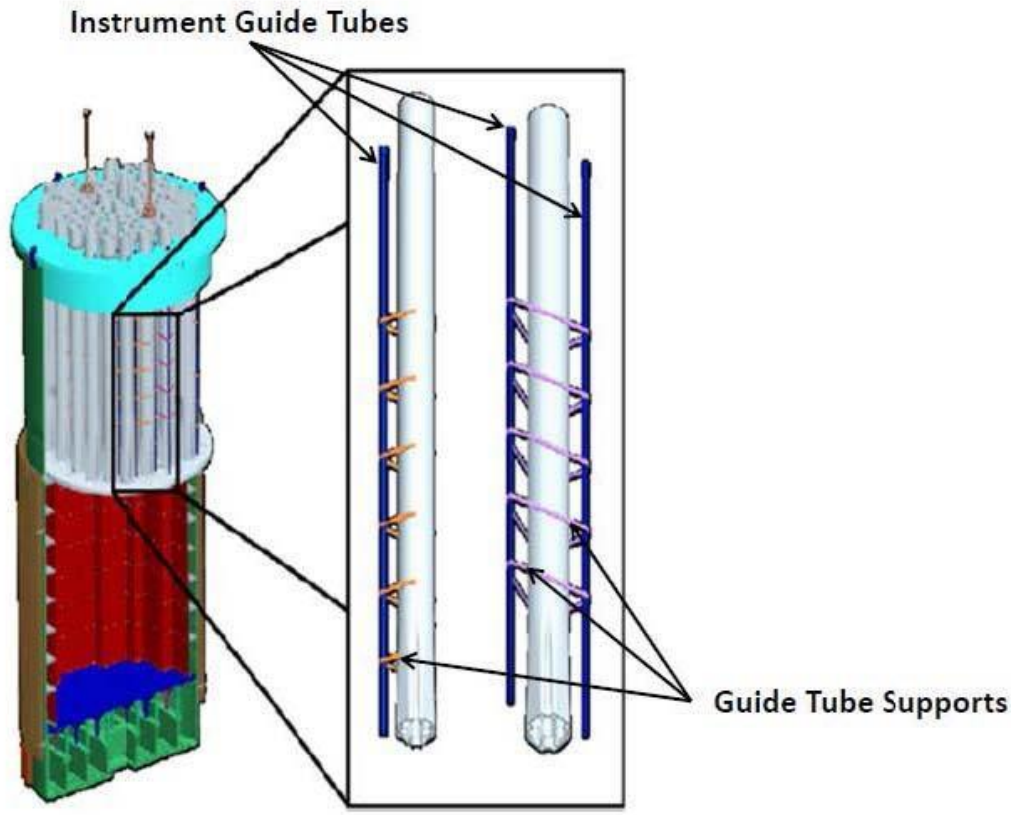

Figure 4-32
Typical CE-Design Control Element Assembly Instrument Guide Tubes

Note: Figure intended to represent the component features and relative position to other portions of the structure and system. Figure does not contain or transmit design information and is not meant to be used for performing engineering assessments, evaluations, or examinations.

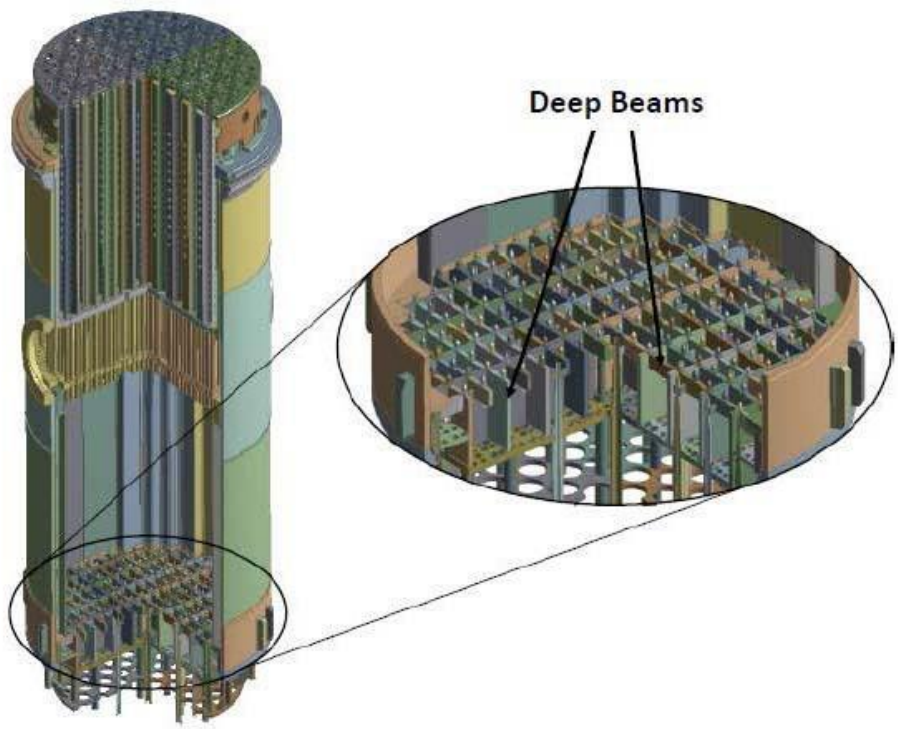

Figure 4-33
Typical CE-Design Lower Support Structure Deep Beams

Note: Figure intended to represent the component features and relative position to other portions of the structure and system. Figure does not contain or transmit design information and is not meant to be used for performing engineering assessments, evaluations, or examinations.

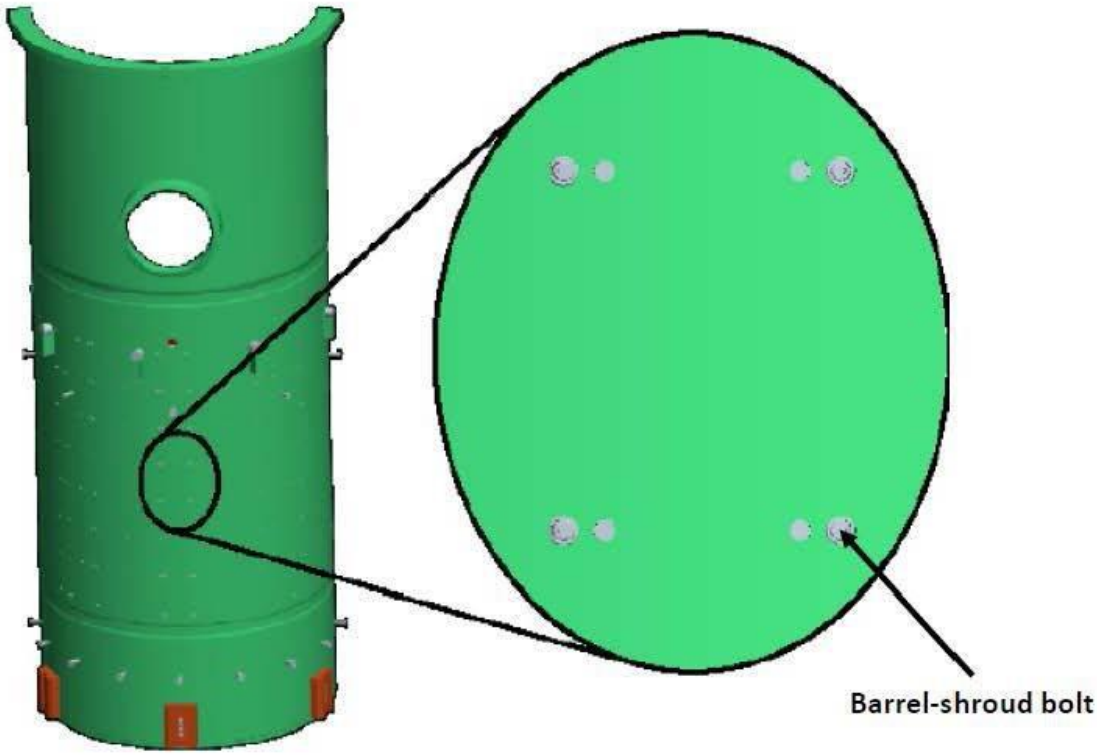

Figure 4-34
Typical CE-Design Core Shroud Assembly (Bolted) Barrel Shroud Bolts

Note: Figure intended to represent the component features and relative position to other portions of the structure and system. Figure does not contain or transmit design information and is not meant to be used for performing engineering assessments, evaluations, or examinations.

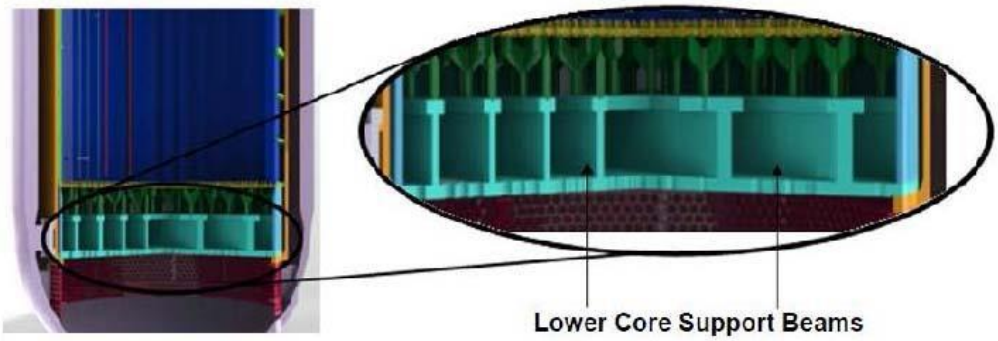

*Figure 4-35**
Typical CE-Design Lower Support Structure Lower Core Support Beams

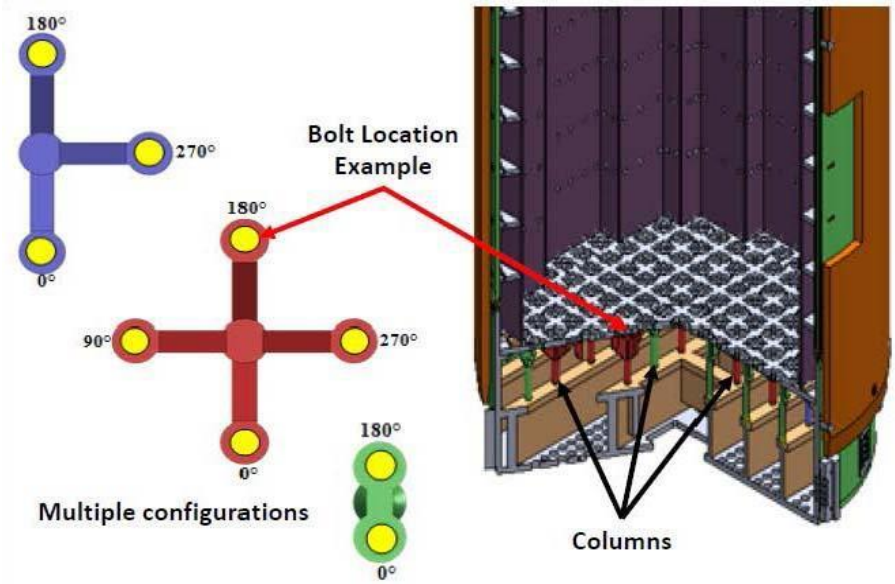

*Figure 4-36**
Typical CE-Design Core Shroud Assembly (Bolted) Core Support Column Bolts

* Note: Figure intended to represent the component features and relative position to other portions of the structure and system. Figure does not contain or transmit design information and is not meant to be used for performing engineering assessments, evaluations, or examinations.

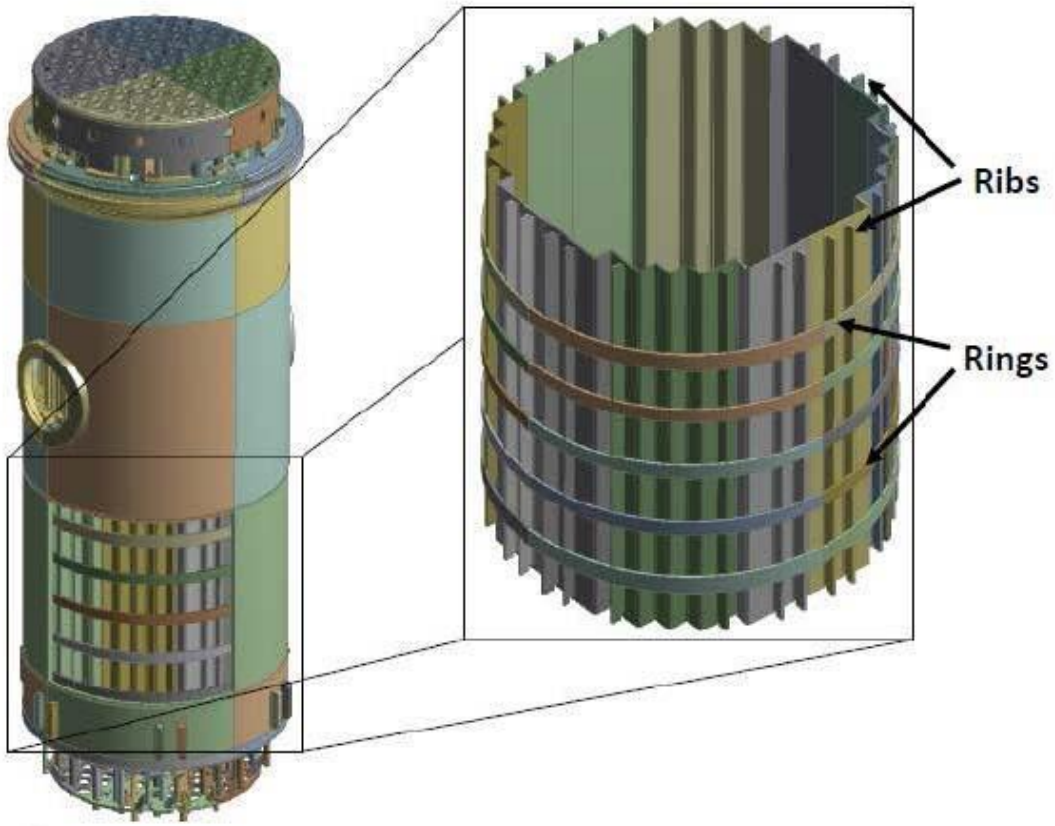

Figure 4-37
Typical CE-Design Core Shroud Assembly (Welded) Remaining Axial Welds, Ribs and Rings

Note: Figure intended to represent the component features and relative position to other portions of the structure and system. Figure does not contain or transmit design information and is not meant to be used for performing engineering assessments, evaluations, or examinations.

Westinghouse

To: Matthew P. Paden
cc:

Date: January 2, 2017

From: Reactor Internals Aging Management
Ext: 412-374-4688

Your ref: N/A
Our ref: LTR-RIAM-16-106

Subject: **Transmittal of Corrections to EPRI Report 3002005349, Materials Reliability Program: Pressurized Water Reactor Internals Inspection and Evaluation Guidelines (MRP-227, Revision 1)**

Attachment: **Corrections to EPRI Report 3002005349, Materials Reliability Program: Pressurized Water Reactor Internals Inspection and Evaluation Guidelines (MRP-227, Revision 1)**

References:

1. *Materials Reliability Program: Pressurized Water Reactor Internals Inspection and Evaluation Guidelines (MRP-227, Revision 1)*. EPRI, Palo Alto, CA: 2015. 3002005349.

The purpose of this letter is to transmit an errata notice for MRP-227, Revision 1 [1]. MRP-227, Revision 1 was published in October 2015. Since publication some inconsistencies were identified within the document. These errata are editorial in nature and are documented in the attachment to this letter.

In addition to the corrections made, clarifying text was added to the captions of the figures containing Combustion Engineering and Westinghouse reactor internals representations. The intent of these figures is only to represent the component features and position relative to other portions of the structure and system. The figures do not contain or transmit design information and are not meant to be used for performing engineering assessments, evaluation, or examinations. These changes are also documented in the attachment to this letter.

Replacement pages for MRP-227, Revision 1 [1], incorporating these corrections and clarifications are included in the attachment to this letter.

If you have additional questions or require further information, please contact the undersigned.

Authored by: Electronically Approved*
Gaurav B. Tilva
Reactor Internals Aging Management

Verified by: Electronically Approved*
Joshua K. McKinley
Reactor Internals Aging Management

Approved by: Electronically Approved*
Patricia C. Paesano, Manager
Reactor Internals Aging Management

***Electronically approved records are authenticated in the Electronic Document Management System.**