10 CFR 50.90

MARIA L. LACAL
Senior Vice President, Nuclear
Regulatory & Oversight

Palo Verde
Nuclear Generating Station
P.O. Box 52034
Phoenix, AZ 85072
Mail Station 7605
Tel 623.393.6491

102-07411-MLL/TNW
December 30, 2016

U. S. Nuclear Regulatory Commission
ATTN: Document Control Desk
Washington, DC 20555-0001

Dear Sirs:

Subject: **Palo Verde Nuclear Generating Station (PVNGS)**
Unit 3
Docket No. STN 50-530
Renewed Operating License No. NPF-74
Emergency License Amendment Request to Extend Diesel Generator 3B Completion Time

By letter number 102-07406, dated December 21, 2016 [Agency Documents Access and Management System (ADAMS) Accession Number ML16356A689], and supplemented by letter number 102-07410 (ADAMS Accession Number ML16356A715), dated December 23, 2016, Arizona Public Service Company (APS) submitted a deterministic license amendment request (LAR) to extend the Technical Specification (TS) required action 3.8.1.B.4 completion time from 10-days to 21-days for the purpose of collecting and analyzing data associated with the diesel generator engine failure and continue repair of the Unit 3 train 'B' emergency diesel generator (3B DG). The NRC staff issued license amendment number 199 for Unit 3 by letter dated December 23, 2016 (ADAMS Accession Number ML16358A676). As part of the LAR, APS indicated that after analysis of causal information and if there was a determination that there is no common mode failure potential for the Unit 3 train 'A' DG, a risk-informed LAR would be submitted for the duration of the repair and testing of the 3B DG.

Disassembly and inspection of the damaged 3B DG has been aggressively and continuously pursued since initial failure on December 15, 2016. APS established an Outage Control Center (OCC) to schedule, manage and oversee the work activities needed for the repairs. Multi-discipline teams were formed to assess the extent of damage, inspect and recover parts, and determine the cause of failure. APS has determined that the cause of failure of the 3B DG is attributed to high cycle fatigue and that the mode of failure is not common to the 'A' train DG in Unit 3 or the DGs in Units 1 and 2.

Therefore, in accordance with the provisions of Section 50.90 of Title 10 of the *Code of Federal Regulations* (10 CFR), APS is submitting an emergency risk-informed LAR for an extension of the completion time described in TS 3.8.1.B.4 for the Palo Verde Nuclear Generating Station (PVNGS) 3B DG. Specifically, the emergency risk-informed LAR would extend, on a one-time basis, the TS required action 3.8.1.B.4 completion time from 21-days to 62-days for the purpose of completing repairs and testing to re-establish operability of the 3B DG.

The enclosure to this letter provides a description and assessment of the proposed change including a summary of the technical evaluation, a regulatory evaluation, a no significant hazards consideration, and an environmental consideration. The enclosure also contains eighteen attachments. Attachment 1 provides the marked-up existing TS page. Attachment 2 provides the revised (clean) TS page. No TS Bases changes are proposed for this LAR. Attachment 3 provides the compensatory measures and commitments associated with the LAR and Attachment 4 provides a summary of the causal evaluation. Attachments 5 through 15 provide information to demonstrate that the quality and level of detail of the PRA model used for this risk-informed LAR meet the NRC requirements in Regulatory Guide 1.200, *An Approach for Determining the Technical Adequacy of Probabilistic Risk Assessment Results for Risk-Informed Activities,* Revision 2. Attachments 16 and 17 address specific risk-based technical concerns that were brought up during the pre-submittal conference call held on December 29, 2016. Attachment 18 is a summary description of the 3B DG Repair and Testing Schedule.

In accordance with the PVNGS Quality Assurance Program, the Plant Review Board and the Offsite Safety Review Committee have reviewed and approved this emergency LAR. By copy of this letter, this LAR is being forwarded to the Arizona Radiation Regulatory Agency in accordance with 10 CFR 50.91(b)(1).

APS requests approval of the LAR on an emergency basis prior to the expiration of the current 21-day completion time, which expires at 3:56 am on January 5, 2017. APS will implement the TS amendment immediately following NRC approval. Absent approval, PVNGS Unit 3 would be required to begin shutdown, pursuant to TS 3.8.1, Condition H.

Should you have any questions concerning the content of this letter, please contact Thomas Weber, Department Leader, Nuclear Regulatory Affairs, at (623) 393-5764.

I declare under penalty of perjury that the foregoing is true and correct.

Executed on : December 30, 2016
(Date)

Sincerely,

Andrews, George W(Z99748)

Digitally signed by Andrews, George W(Z99748)
DN: cn=Andrews, George W(Z99748)
Reason: I am approving this document for Maria Lacal
Date: 2016.12.30 17:41:35 -07'00'

MLL/TNW/CJS/af

Enclosure: Description and Assessment of Proposed License Amendment

cc:	K. M. Kennedy	NRC Region IV Regional Administrator
	S. P. Lingam	NRC NRR Project Manager for PVNGS
	M. M. Watford	NRC NRR Project Manager
	C. A. Peabody	NRC Senior Resident Inspector for PVNGS
	T. Morales	Arizona Radiation Regulatory Agency (ARRA)

Enclosure

Description and Assessment of Proposed License Amendment

TABLE OF CONTENTS

8. Internal Events PRA Peer Review A and B Level Findings
9. Internal Events PRA Self-Assessment of ASME SRs Not Met to Capability Category II
10. Internal Flood PRA Peer Review ASME SRs Not Met to Capability Category II
11. Seismic PRA Peer Review ASME SRs Not Met to Capability Category II
12. Internal Fire PRA Peer Review ASME SRs Not Met to Capability Category II
13. External Hazards Screening
14. Progressive Screening Approach for Addressing External Hazards
15. Disposition of Key Assumptions/Sources of Uncertainty
16. PRA Responses to NRC Technical Concerns from Pre-Submittal Conference Call of December 29, 2016
17. Responses to NRC Technical Concerns Regarding Portable Diesel Generators (DGs) from Pre-Submittal Conference Call of December 29, 2016
18. 3B DG Repair and Testing Schedule

LIST OF ACRONYMS

ac or AC	Alternating Current
AFAS	Auxiliary Feedwater Actuation Signal
AFP	Auxiliary Feedwater Pump
APS	Arizona Public Service Company
BOP-ESFAS	Balance of Plant Engineered Safety Features Actuation System
BTP	Branch Technical Position
CDF	Core Damage Frequency
CFR	Code of Federal Regulations
DC	Direct Current
DG	Diesel Generator
ESF	Engineered Safety Feature
ESFAS	Engineered Safety Features Actuation System
GDC	General Design Criterion
GSI	Generic Safety Issue
hp	Horsepower
HPSI	High Pressure Safety Injection
ICCDP	Incremental Conditional Core Damage Probability
ICLERP	Incremental Conditional Large Early Release Probability
kV	kilovolts (1,000 volts)
LAR	License Amendment Request
LCO	Limiting Condition for Operation
LERF	Large Early Release Frequency
LOCA	Loss of Coolant Accident
LOOP	Loss of Offsite Power
LPSI	Low Pressure Safety Injection
MCC	Motor Control Center
PVNGS	Palo Verde Nuclear Generating Station
RCP	Reactor Coolant Pump
SBO	Station Blackout
SBOG	Station Blackout Generators
SIAS	Safety Injection Actuation Signal
SR	Surveillance Requirement
TS	Technical Specification
UFSAR	Updated Final Safety Analysis Report

1.0 SUMMARY DESCRIPTION

By letter number 102-07406, dated December 21, 2016 [Agency Documents Access and Management System (ADAMS) Accession Number ML16356A689], and supplemented by letter number 102-07410 (ADAMS Accession Number ML16356A715), dated December 23, 2016, Arizona Public Service Company (APS) submitted a deterministic license amendment request (LAR) to extend the Technical Specification (TS) required action 3.8.1.B.4 completion time from 10-days to 21-days for the purpose of collecting and analyzing data associated with the diesel generator engine failure and continue repair of the Unit 3 train 'B' emergency diesel generator (3B DG). The NRC staff issued license amendment number 199 for Unit 3 by letter dated December 23, 2016 (ADAMS Accession Number ML16358A676). As part of the LAR, APS indicated that after analysis of causal information and if there was a determination that there is no common mode failure potential for the Unit 3 train 'A' DG, a risk-informed LAR would be submitted for the duration of the repair and testing of the 3B DG.

Disassembly and inspection of the damaged 3B DG has been aggressively and continuously pursued since initial failure on December 15, 2016. APS established an Outage Control Center (OCC) to schedule, manage and oversee the work activities needed for the repairs. Multi-discipline teams were formed to assess the extent of damage, inspect and recover parts, and determine the cause of failure. APS has determined that the cause of failure of the 3B DG is attributed to high cycle fatigue and that the mode of failure is not common to the 'A' train DG in Unit 3 or the DGs in Units 1 and 2.

Therefore, in accordance with the provisions of Section 50.90 of Title 10 of the *Code of Federal Regulations* (10 CFR), APS is submitting an emergency risk-informed LAR for an extension of the completion time described in TS 3.8.1.B.4 for the Palo Verde Nuclear Generating Station (PVNGS) 3B DG. Specifically, the emergency risk-informed LAR would extend, on a one-time basis, the TS required action 3.8.1.B.4 completion time from 21-days to 62-days for the purpose of completing repairs and testing to re-establish operability of the 3B DG.

This enclosure provides a description and assessment of the proposed changes including a summary of the technical evaluation, a regulatory evaluation, a no significant hazards consideration, and an environmental consideration. The enclosure also contains fifteen attachments. Attachment 1 provides the marked-up existing TS page. Attachment 2 provides the revised (clean) TS page. No TS Bases changes are proposed for this one-time LAR. Attachment 3 provides the compensatory measures and commitments associated with the LAR and Attachment 4 provides a summary of the causal evaluation. Attachments 5 through 15 provide information to demonstrate that the quality and level of detail of the PRA model used for the risk-informed LAR meet the NRC requirements in Regulatory Guide 1.200, *An Approach for Determining the Technical Adequacy of Probabilistic Risk Assessment Results for Risk-Informed Activities,* Revision 2. Attachments 16 and 17 address specific risk-based technical concerns that were brought up during the pre-submittal conference call held on December 29, 2016. Attachment 18 is a summary description of the 3B DG Repair and Testing Schedule.

2.0 DETAILED DESCRIPTION

2.1 Proposed Change to the Technical Specifications

The following specific TS changes are proposed to extend the completion time on a one-time basis for the PVNGS 3B DG.

- TS 3.8.1, *Electrical Power Systems*, *AC Sources - Operating*
  - Modify NOTE in the Completion Time column, associated with Required Action B.4 of the TS 3.8.1 Action Table, to read as follows:

    NOTE
    -
    For the 3B DG failure on December 15, 2016, restore the inoperable DG to OPERABLE status within 62 days.
    -

A marked-up TS page is provided in Attachment 1 and a revised TS page (clean copy) is provided in Attachment 2.

2.2 Need for Proposed Change

During routine scheduled surveillance testing on December 15, 2016, the PVNGS Unit 3 'B' train DG was operating partially loaded when the load suddenly decreased and a low lube oil pressure trip occurred. The physical damage was readily apparent to plant operators when responding to the event. Oil and metal debris were observed on the engine room floor and the number nine right cylinder crankcase cover was deformed. Physical damage was extensive, including but not limited to the number nine master and articulating rod separated and impacted internal areas of the engine base and block. Both the 9R and 9L pistons, sleeves and associated components were damaged and will require replacement. The counterbalance was also fractured and the crankshaft was damaged at this number nine location. There was damage to the number eight master and articulating rod, including the physical fracture of two studs on the cap. A counterbalance at the number eight location was also fractured and damaged. The number three bearing seating surface was discovered to be cracked.

Current plans to repair the DG will exceed the TS required action completion time of 21 days approved by license amendment 199. Attachment 18 of this enclosure provides a high level schedule of activities planned to restore the 3B DG and perform startup and surveillance testing. APS has determined the cause of the 3B DG failure does not represent a common mode failure potential for the Unit 3 train 'A' DG, and has evaluated the operational risk and is requesting an emergency LAR to extend the completion time to allow completion of repair and testing.

APS requests approval of the LAR on an emergency basis prior to the expiration of the current 21-day completion time, which expires at 3:56 am on January 5, 2017. APS will implement the TS amendment immediately following NRC approval. Absent approval, PVNGS Unit 3 would be required to begin shutdown, pursuant to TS 3.8.1, Condition H.

2.3 Basis for Duration of Completion Time Extension

The 3B DG sustained extensive damage as a result of the recent failure. The repairs will require substantial disassembly, investigation, repair and/or replacement of damaged components, reassembly and retests. The requested completion time extension will allow for completion of repairs and testing of the 3B DG. Completed activities include

initial visual inspection, damage assessment, parts recovery, removal of the generator, flywheel, and crankshaft, precision alignment checks of the DG internals, removal of pistons, liners and connecting rods, line bore measurements, and block inspection. Continued repair activities include block repairs and machining, foundation inspection and repairs, installation of a new crankshaft followed by engine, generator, and flywheel re-assemblies, system flushes, startup checks, and retests.

Retest of the 3B DG diesel will begin with several short maintenance runs which include integral monitoring and inspection activities. Then, an over-speed test will be performed followed by a 24-hour loaded run with a 100 percent load reject and a hot restart. Finally, isochronous load testing will be performed to verify appropriate voltage and frequency response to sequenced loads. The retest activities are scheduled to take approximately 4.5 days.

These activities are described in Attachment 18, which reflects a 56 day duration. The requested required action completion time extension reflects 6 additional days for contingency to address unknowns. APS will restore the 3B DG to operable status as soon as possible.

3.0 BACKGROUND

3.1 System Description

<u>Off-Site Power Grid Reliability</u>

The off-site power source reliability is described to establish a context of the PVNGS operations. Salt River Project (SRP) operates and maintains the PVNGS 525 kV switchyard, and is the grid operator in the PVNGS area. SRP performs a load flow and dynamic stability (frequency and voltage) study of the grid periodically (typically on a three year frequency). The stability study examines the following conditions per the PVNGS UFSAR section 8.2.2, *Analysis*:

- A permanent three-phase fault on the 525 kV switchyard bus with subsequent loss of the critical 525 kV line.
- A sudden loss of one of three PVNGS units with no under frequency load shedding measures in effect.
- The sudden loss of the largest single load in Arizona, New Mexico, Southern California, or Southern Nevada.

The stability study also complies with North American Electric Reliability Corporation (NERC) standards, and is one of the Nuclear Plant Interface Requirements (NPIRs). The study shows the grid remains stable in frequency, phase angle, and voltage.

Seven physically independent 525 kilovolt (kV) transmission lines of the Western Interconnection are connected to the Palo Verde Nuclear Generating Station (PVNGS) 525 kV switchyard, as shown in Figure 1. Three 525 kV tie lines supply power from the switchyard to three startup transformers, which supply power to six 13.8 kV intermediate buses (two per unit). Two physically independent circuits supply offsite (preferred) power to the onsite power system of each PVNGS unit.

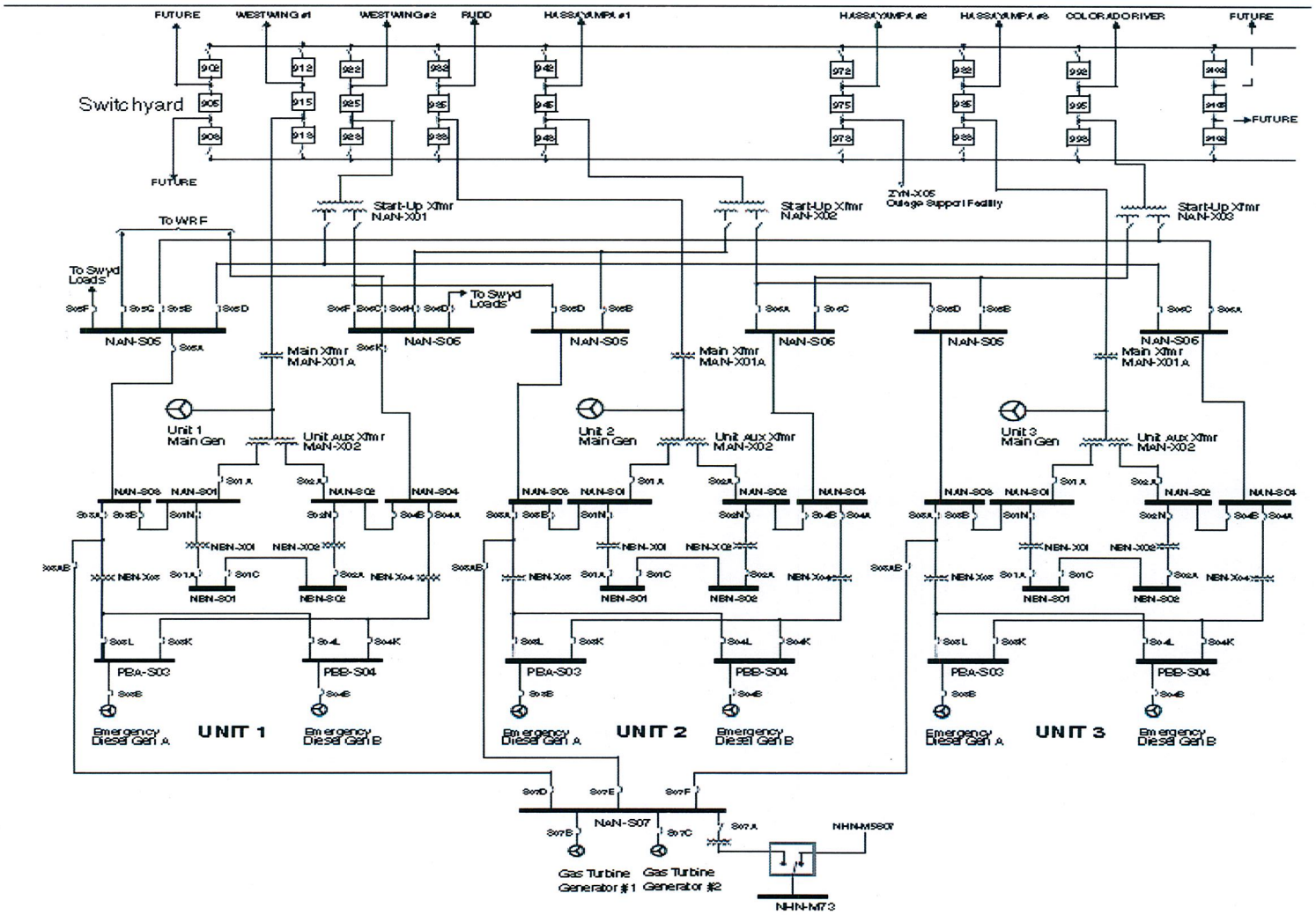

Figure 1: PVNGS Electrical Distribution System

The SRP 525 kV switchyard utilizes a breaker-and-a-half design in which three breakers are provided for every two terminations, either line or transformers. Each turbine-generator connects to the PVNGS 525 kV switchyard through a main transformer, a 525 kV tie line, and two 525 kV switchyard breakers.

The three startup transformers connect to the PVNGS 525 kV switchyard through two 525 kV switchyard breakers each, and feed six 13.8 kV intermediate buses (two per unit). These buses are arranged in three pairs, each pair feeding only one unit. The intermediate buses for PVNGS Units 1, 2, and 3 are interconnected to the startup transformers so that each unit's buses can access a primary and backup startup transformer winding when all startup transformers are connected to the switchyard. The intermediate buses are connected to the onsite power system by one 13.8 kV transmission line per bus (two per unit).

The safety-related equipment is divided into two load groups per unit, see Figure 2 below. For each unit, either of the associated load groups is capable of providing power for safely shutting down the unit. Each ac load group consists of one 4.16 kV bus, three 480 V load centers, and four 480 V motor control centers (MCCs). Two non-Class 1E MCCs are connected to each load group and are tripped on a safety injection actuation signal (SIAS).

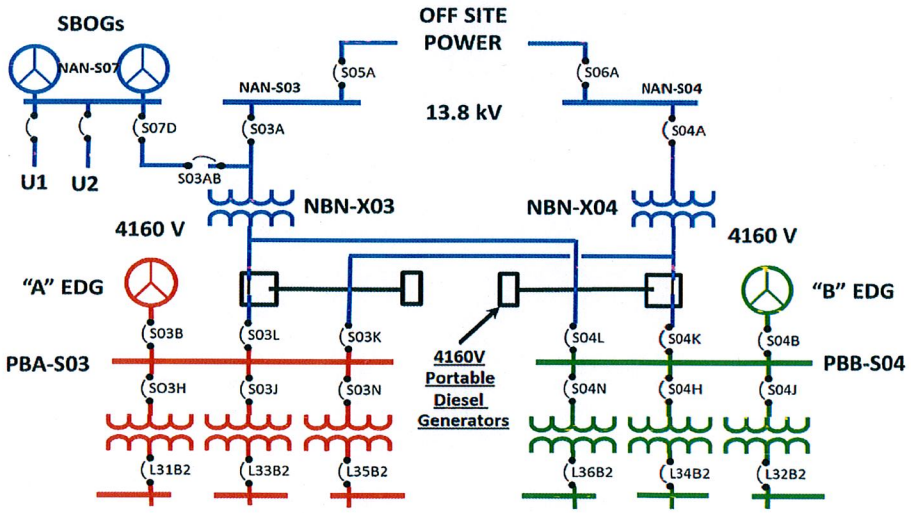

Figure 2: PVNGS Unit 3 AC Power System

PVNGS UFSAR Section 8.3.1.1.4, *Standby Power Supply,* provides a more detailed description of the on-site power system. The standby power supply for each safety-related load group consists of one diesel generator complete with its accessories, fuel storage and transfer systems. The standby power supply functions as a source of ac power for safe plant shutdown in the event of loss of preferred power and for post-accident operation of engineered safety feature (ESF) loads. Each diesel generator is rated at 5500 kiloWatt (kW) for continuous operation and 6050 kW for two hours out of 24 hours. Each generator is driven by a turbocharged, four-cycle, 20-cylinder diesel engine. There are no provisions for automatically paralleling the two diesel generators within a unit. Interlocks are provided to prevent manual paralleling of the diesel generators. There are no direct interconnections between the standby power supplies of the individual units.

Each diesel generator is normally connected to a single 4.16 kV safety features bus of a load group. However, there are provisions for connecting both ESF buses to a single diesel generator during emergency conditions. Each load group is independently capable of safely shutting down the unit or mitigating the consequences of a design basis accident.

The diesel generators are physically and electrically isolated from each other. Physical separation for fire and missile protection is provided by installing the diesel generators in separate rooms in a Seismic Category I structure. Power and control cables for the diesel generators and associated switchgear are routed in separate raceways.

The components of the standby power supply system, including related controls, required to supply power to ESF and cold shutdown loads conform to the requirements of General Design Criterion 17, IEEE 308, and IEEE 279 (References 15, 16, and 17).

Station Blackout

10 CFR Part 50.63 requires that each light water-cooled nuclear power plant be able to withstand and recover from a station blackout (SBO) of a specified duration. The PVNGS SBO 16-hour coping evaluation was submitted to the NRC in APS letter 102-05370 (Reference 18), dated October 28, 2005. Supplemental information was provided in APS letter 102-05465 (Reference 19), dated April 19, 2006. The NRC approved the 16-hour SBO coping evaluation in a Safety Evaluation dated October 31, 2006.

The 16-hour coping strategy analysis assumes that one of the two Station Blackout Generators (SBOG), which serves as the Alternate AC (AAC) for PVNGS, is started and connected to the AC distribution system to supply loads in the respective unit during the first hour to allow the analyzed SBO loads to be powered in accordance with administrative or emergency procedures.

Should a SBO occur in any one unit, i.e., a loss of offsite power coincident with the unavailability of both emergency diesel generators in that unit, an AAC power source is available to provide the power necessary to cope with a SBO for a minimum of 16 hours. The PVNGS response to a SBO has been developed in accordance with RG 1.155, *Station Blackout*, and NUMARC 87-00, *Guidelines and Technical Bases for NUMARC Initiatives Addressing Station Blackout at Light Water Reactors*.

The non-safety related AAC power source consists of two 100 percent capacity SBOGs that can be connected to each unit at switchgear NAN-S03 via the primary winding of the ESF transformer that is normally aligned to the train 'A' 4.16 kV bus. One SBOG is analyzed to supply all required SBO loads, which are located on the 'A' train. The AAC starting system and diesel fuel oil supply is independent from the black-out unit's power systems and fuel oil supply systems, however, switchgear NAN-S03 at each unit is dependent upon the unit's non-safety related 125 V direct current (dc) power system. This dc system is energized from the AAC power source to maintain its operability during the SBO event. The fuel oil storage tank associated with the SBOGs is maintained with sufficient fuel to support full load operation of the two SBOGs for 16 hours.

The AAC power system is not normally connected to the onsite power distribution system. Therefore failure of the AAC components cannot adversely affect the Class 1E power systems.

The AAC power system is physically located and physically protected so that an event initiating a SBO will not also affect the AAC system. Connections from the SBOGs to the units are made via cables routed through underground duct banks. Each SBOG has a minimum continuous output rating of 3400 kW at 13.8 kV under worst case anticipated site environmental conditions. This rating is sufficient to provide power to the loads identified as being important for coping with the SBO. Starting and loading of the AAC power system is performed manually; no autostart or automatic loading capability is provided.

The AAC power system is able to be aligned to provide power to Unit 3, however, from a defense-in-depth perspective for this LAR the PVNGS SBOGs are not credited to provide power to the 3B Class 1E 4160 VAC bus. APS has deployed three portable diesel generators at Unit 3 connected to the 4.16 kV AC FLEX connection box that can supply the train 'B' 4.16 kV AC class bus to maintain the same level of defense-in-depth for safe shutdown of the plant.

3.2 Cause Summary

This section is a summary of the causal evaluation that supports the risk-informed LAR. Attachment 4 provides a more detailed technical causal and common mode failure evaluation. The causal analysis for the 3B diesel engine has concluded that this engine had a misaligned crankshaft bore that resulted from the 1986 failure. The misalignment of the crankshaft bore resulted in sufficient cyclic stresses at the master rod ligament to initiate and propagate a fatigue crack. It is likely the misalignment also contributed to fretting between the master rod crank pin bore and bearing, contributing to the crack initiation. This crack would then propagate based on the elevated alternating stresses in the engine, which were increased at the crack location because of the misalignment. This eventually led to the cyclic fatigue failure.

Evidence indicates that the DG 3B misalignment was due to the previous connecting rod failures and subsequent in situ repair. The remaining five diesels at PVNGS (DG 1A, DG 1B, DG 2A, DG 2B and DG 3A) have never had a connecting rod failure or any other mechanical event that could have introduced misalignment. Additionally available performance data from the 3A DG does not contain the same variability as the 3B DG. Therefore, the failure mechanism that caused either of the 1986 or 2016 3B DG failure is not present in the 3A DG or any other PVNGS Emergency Diesel Generator.

As documented throughout this evaluation there is no susceptibility to the DG 3A related to either the flaw and/or stress initiators that contributed to the previous Cooper-Bessemer KSV-20-cyclinder diesel engines in nuclear service. As such, there is no common mode failure to DG 3A.

4.0 TECHNICAL ANALYSIS

4.1 Deterministic Evaluation (Defense-in-Depth)

APS provided a deterministic evaluation to extend the TS required action 3.8.1.B.4 completion time from 10-days to 21-days. This evaluation was provided in APS letter number 102-07406, dated December 21, 2016 (ADAMS Accession Number ML16356A689). NRC approval of the change in license amendment number 199 for

PVNGS Unit 3 was provided by letter dated December 23, 2016 (ADAMS Accession Number ML16358A676).

During the extended unavailability period of the 3B DG requested by this letter, APS will continue to deploy portable diesel generators connected to the 4.16 kV AC FLEX connection box that can supply the 'B' train 4.16 kV AC Class 1E bus as described in APS letter number 102-07406, dated December 21, 2016 (ADAMS Accession Number ML16356A689) and approved by NRC license amendment number 199 for PVNGS Unit 3, dated December 23, 2016. The commitments are restated in Attachment 3 of this enclosure.

Figure 4 is a simplified diagram of the FLEX portable generator connections to the 'B' train Class 1E bus.

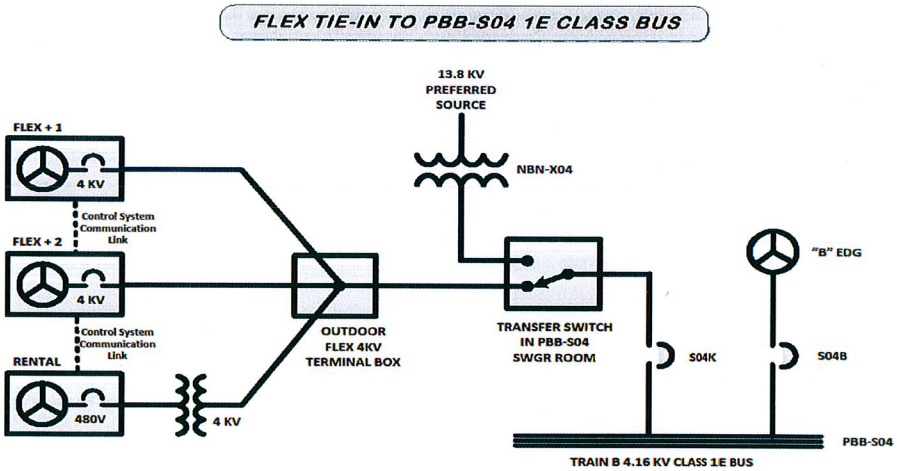

Figure 4: FLEX Tie-In to PBB-S04 Class 1E Bus

4.2 Safety Margin Evaluation

The proposed one-time extension of the 3B DG completion time remains consistent with the codes and standards applicable to the PVNGS onsite AC sources and electrical distribution system. A loss of all AC power event would require a loss of all offsite power sources, failure of the train 'A' DG, failure of both SBOGs, and failure of the portable DGs. In addition, with deployment of the diesel-driven FLEX SG Makeup Pump at Unit 3, another backup supply of SG makeup independent of offsite power or the 4.16 kV AC buses is provided to mitigate the most likely scenarios associated with a loss of offsite power event. Also, PVNGS has installed a cross-connection which allows make-up to the SGs from the station fire protection system which provides additional defense-in-depth for the heat removal safety function. Based on realistic thermal hydraulic analysis, PVNGS design now includes six 100 percent capacity steam generator (SG) makeup pumps each supplied by onsite power sources. Only one of these sources is powered by the 3B DG if offsite power is lost. Therefore, there is no significant reduction in the margin of safety.

4.3 Evaluation of Risk Impacts

The risk associated with extending the PVNGS Unit 3 one-time Technical Specification 3.8.1 Condition B.4 completion time for the 3B DG from the current 21-days to 62-days has been evaluated with a PRA model that meets all scope and quality requirements in RG 1.200, Revision 2 (Reference 1) to Capability Category II. This plant-specific risk assessment followed the guidance in RG 1.177, Revision 1 (Reference 11).

4.3.1 Tier 1: Probabilistic Risk Assessment Capability and Insights

The baseline Core Damage Frequency (CDF) and Large Early Release Frequency (LERF) contributions from the PRA models are provided in Attachment 6. The total CDF and LERF meet the NRC RG 1.174, Revision 2 (Reference 10) acceptance criteria for risk-informed licensing changes (i.e., CDF less than 1E-4 per year and LERF less than 1E-5 per year). The risk impact associated with a one-time extension is provided in Attachment 7 and meets the acceptance criteria in RG 1.177, Revision 1 (Reference 11) where effective compensatory measures are implemented to reduce the sources of increased risk.

The PRA models used for demonstrating compliance with RG 1.177, Revision 1 (Reference 11) acceptance criteria, did not include quantitative credit for any portable equipment including:

- Three portable diesel generators that are deployed at Unit 3 and connected to the 4.16 kV AC FLEX connection box that can supply the train 'B' 4.16 kV AC class bus
- A diesel-driven FLEX steam generator (SG) makeup pump that is deployed at Unit 3

The portable equipment was not credited in the risk assessment due to concerns that insufficient reliability data exists for this equipment, and thus RG 1.200 data requirements could not be met until that data became available. However, the portable diesel generators were considered quantitatively in sensitivity analyses requested by the NRC in Attachment 16 to demonstrate actual margin in the risk results from the acceptance criteria in RG 1.177. When doing so, a greater than 50 percent reduction in ICCDP and ICLERP is achieved.

Note that any two of the three portable diesel generators have sufficient capacity to supply train 'B' loads necessary to prevent core damage in any event modeled in the PRA assuming failure of all train 'A' safety systems, with the exception of a loss of coolant accident. Any two of the three portable diesel generators are capable of supplying the same loads as a single SBOG, including a motor-driven auxiliary feedwater pump, based on best-estimate analysis. In the previous LAR, each of the three portable DGs were required to satisfy BTP 8-8 to achieve design basis cold shutdown. The loads were described in Attachment 4 of the the previous LAR. The loads for cold shutdown exceed the required loads for station blackout and FLEX.

In the first pre-submittal meeting with the NRC on the proposed one-time emergency technical specification change request associated with the 3B DG (which ultimately became license amendment 199), a request was made to identify the major differences between the NRC Standardized Plant Analysis Risk (SPAR) model for Palo

Verde and the current APS RG 1.200 PRA model for Palo Verde Unit 3. Those major differences are summarized below:

- The Palo Verde PRA model credits the proceduralized manual operation of the train 'A' turbine-driven auxiliary feedwater pump after a loss of DC control power due to train 'A' battery depletion following a loss of all AC power event. The credit takes into account the longer battery depletion times for the lightly loaded train 'C' and 'D' batteries (less than 24 hours) that ensure operators have sufficient Control Room instrumentation available to support this action. An NRC Region IV Senior Reactor Analyst observed the manual operation of this pump without DC control power during a reactor startup in April 2013 in support of a significance determination process (SDP) evaluation of a diesel generator finding. The SDP evaluation ultimately credited this capability and documented observation of this demonstration in an NRC Inspection Report dated August 9, 2013 (Adams Accession Number ML13221A202) (Reference 20).

- Palo Verde Unit 3 implemented a significant risk-reducing modification during the fall 2016 refueling outage to cross-tie the site firewater loop to the discharge of the train 'N' auxiliary feedwater pump. Use of this cross-connect is proceduralized in the emergency operating procedures and is further described in a Unit 3 Operations Night Order to emphasize the importance of timely use of this success path if necessary to prevent core damage. This modification enables any one of three 100 percent capacity firewater pumps (one electric-driven and two diesel-driven) to provide sufficient low pressure steam generator makeup to prevent core damage within 75 minutes of a loss of all feedwater event based on best-estimate thermal-hydraulic analysis. A hydraulic analysis of the flow path from the firewater pumps to the steam generators was performed to determine the flow rate assumed in the thermal-hydraulic analysis. Utilization of this success path requires opening of three easily accessible manual valves in the Turbine Building adjacent to the train 'N' auxiliary feedwater pump and depressurization of the steam generators in the same manner as for using a condensate pump for steam generator makeup. Palo Verde has four atmospheric dump valves (two per steam generator) and any one valve is sufficient to depressurize the steam generator below the shutoff head of the firewater system. The firewater pumps start automatically on low firewater header pressure, thus no operator action is required to start the pumps. Note that this modification is not currently credited in the internal events or internal flood models, and will not be credited in the seismic PRA due to the susceptibility of the firewater system to fail in seismic events. This modification is credited in the fire PRA model. A fire in Unit 3 does not have the potential to impact these pumps since they are located at the physically separate Water Reclamation Facility and the power sources and controls for these pumps are not fed through Unit 3. A simulator exercise was performed to evaluate changes to emergency operating procedures involving this cross-connect and confirm timing assumptions for the PRA human reliability analysis (see Attachment 16).

4.3.2 Tier 2: Avoidance of Risk Significant Plant Configurations

PVNGS plant risk associated with the proposed extended 3B DG completion time is determined from RG 1.200, Revision 2 (Reference 1) Capability Category II

compliant PRA models for internal events, internal flooding, seismic, and internal fires. Associated actions to avoid or respond to these events through function of onsite emergency backup power supplies, and inclusion of additional onsite emergency power are discussed in Tier 3 information below.

The dominant risk scenarios associated with unavailability of train 'B' DG include:

- Loss of offsite power (i.e., grid, switchyard, or transformer failure)
- Long term seismic induced loss of offsite power
- Fires in the Unit 3 Non-Class Switchgear, Engineered Safety Features (ESF) Switchgear, DC equipment and DC Battery Rooms, Main Control Room, and Auxiliary Building West and East Corridors and Electrical Chases

The dominant contributors to the fire and seismic risk with train 'B' DG out of service were reviewed to ensure they were minimal and correct as documented in Engineering Evaluation 16-15545-023 (Reference 14).

The dominant impact of all the above scenarios on critical safety functions is the loss of heat removal from the Steam Generators due to failure of all the auxiliary feedwater pumps or loss of power to those pumps. Random or induced loss of coolant accidents are not a dominant contributor to risk at PVNGS due to use of low leakage reactor coolant pump seals (Reference 12).

The PRA analysis assumes that other risk significant plant equipment outage configurations will not occur during the extended completion time period by prohibiting elective maintenance on other PRA risk significant plant equipment (i.e., prohibiting voluntary entry into yellow risk management action level configurations) and avoiding other activities that could challenge unit operation or cause fires in risk significant areas as described in the compensatory measures. A yellow risk management action level is entered when core damage frequency doubles or large early radioactive release fraction increases by factor of 4 above the nominal level with all risk significant plant equipment available. The use of the average test and maintenance model is considered very conservative based on the controls being taken to eliminate unavailability of equipment for planned maintenance, and the low likelihood of corrective maintenance occurring during the 62 day repair period. A sensitivity study was performed in Attachment 16 to address the impact of using the average test and maintenance PRA model. When crediting the portable DGs this study indicates a greater than 28 percent reduction in ICCDP and ICLERP.

The PRA analysis also assumes that the increased potential for a common cause failure of the train 'A' diesel generator during the 62 day repair period for the train 'B' diesel generator is minimal based on the cause evaluation described herein. However, a sensitivity analysis was performed in Attachment 16 to evaluate the impact of increasing the common cause failure probability for the train 'A' diesel generator to the alpha factor in the NRC common cause database. When crediting the portable DGs this study indicates a greater than 50 percent reduction in ICCDP and ICLERP.

In addition, the PRA analysis credits the following actions to further reduce fire PRA risk as documented in Engineering Evaluation 16-15545-023 (Reference 14). These additional actions have been added as commitments in the list of compensatory

measures being taken during this extended LAR period (See Attachment 3 to this enclosure):

- Additional dedicated auxiliary operator added to each shift to implement the modification that cross-ties fire water to the train 'N' auxiliary feedwater system
- Posting a continuous fire watch with a fire extinguisher and training to utilize the extinguisher in fire zone FCCOR2 (120' Corridor Building). This action improves detection and response timing assumed in the fire PRA for this area since it contains no detectors or suppression systems. This area contains numerous power and control cables including offsite power supply, reactor coolant pump control, and nuclear cooling water control.
- Establish transient combustible and hot work exclusion zones by procedure and using barriers/signage in the following compartments, and conducting shiftly walkdowns of these zones by the Fire Marshal or his designee. These areas were selected based on their high contribution to core damage frequency from transient combustible fires.

    - Fire zones FCCOR2 (120' Corridor Building) and FCCOR2A (120' Corridor Riser Shaft)
    - Fire zones FCTB04 (upper level only, non-class DC Equipment, [FCTB04-TRAN1])
    - Fire zone FC86A (train 'A' Seismic Gap, make part of train 'A' Electrical Protected Equipment)
    - Fire zone FCTB100 zone ZT1G (SW corner, south half of 100' Turbine between columns TA and TC)

In addition, adverse weather such as extreme heat, extreme thunderstorms, icing or tornadoes are not assumed likely based on historical evidence during the period of this one-time extended completion time due to Palo Verde's location in the southwestern Sonoran Desert. The Tier 3 compensatory actions mitigate additional plant risk due to events beyond that associated with 3B DG unavailability represented in the ICCDP and ICLERP values furnished in the Tier 1 discussion above.

4.3.3 Tier 3: Risk Informed Configuration Management

Risk would also be managed during the extended completion time via the Maintenance Rule 10 CFR 50.65(a)(4) *Configuration Risk Management Program*, which has been reviewed in prior risk-informed Technical Specification change requests (Reference 7).

<u>Technical Adequacy of the PRA</u>

The following sections demonstrate that the quality and level of detail of the PRA model used in the requested change meet NRC requirements in NRC RG 1.200, Revision 2 (Reference 1). Attachment 5 provides the status of plant modifications and evaluations credited in the PRA models, which all have been completed for Unit 3. All the PRA models described below have been peer reviewed and there are no PRA upgrades that have not been peer reviewed. The findings and dispositions from the peer reviews impacting PRA technical quality are described in Attachments 8 through 12. Included in these Attachments are the Facts and Observations (F&Os)

from the indicated peer reviews impacting PRA quality, and do not include F&Os describing optional suggestions or industry best practices. The peer review finding dispositions show all peer review findings to be closed by APS, which indicates they have been resolved by APS and meet the associated ASME PRA Standard RA-Sa-2009 (Reference 9) supporting requirements to Capability Category II. Thus, all the PRA models described herein comply with all scope and quality Capability Category II supporting requirements per RG 1.200, Revision 2 (Reference 1).

The PRA models credited in this request are the same PRA models credited in the Risk-Informed Completion Time application dated July 31, 2015 (Reference 3) with plant modifications described herein and documented in Engineering Evaluation 16-15545-023 (Reference 14). No new methods were utilized in the PRA model changes implemented for this request. The only significant changes were revision of human reliability analyses to reflect the final design of the additional steam generator makeup capability and associated normal and emergency operating procedure changes. Excerpts from those human reliability analyses are provided in Attachment 16. All the plant modifications and evaluations referenced in that application (Reference 3) have been completed in Unit 3. The field routed cable routing differences between the three PVNGS units impacting the fire PRA model were resolved by creating one bounding fire PRA model that reflects the most limiting cable routing from each of the three units for each fire area. The breaker coordination issues associated with fire events described in the Risk-Informed Completion Time application were resolved by analysis with no plant modifications or procedure changes required at any of the three units.

A PRA model update is in process for these models and insights are available from updated inputs to the model (e.g., updated reliability, availability and initiating event data) to support the conclusion that the PRA model used for this application reflects the as-built, as-operated plant. All pending changes to these PRA models (e.g., design changes, procedure changes, corrective actions) have been reviewed for individual and aggregate impact on this evaluation and determined not to impact the conclusions of the evaluation (i.e., RG 1.174 and RG 1.177 acceptance criteria remain met) per Engineering Evaluation 16-15545-023 (Reference 14).

Internal Events and Internal Flooding Hazards

This one-time Technical Specification change evaluation for the internal events and internal flooding hazards uses peer reviewed plant-specific Internal Events and Internal Flooding PRA models in accordance with RG 1.200, Revision 2 (Reference 1). The APS risk management process ensures that the PRA model used in this application reflects the as-built and as-operated plant for each of the PVNGS units.

The Internal Events PRA model was peer reviewed in 1999 by the Combustion Engineering Owners Group (CEOG) prior to the issuance of Regulatory Guide 1.200. As a result, a self-assessment was conducted by APS of the Internal Events PRA model in accordance with Appendix B of RG 1.200, Revision 2 (Reference 1) to address the PRA quality requirements not considered in the CEOG peer review. The Internal Events PRA quality (including the CEOG peer review and self-assessment results) has previously been reviewed by the NRC in requests to extend the Inverter Technical Specification Completion Time (Reference 7) and to implement TSTF-425 Risk-Informed Surveillance Frequency Control Program (Reference 8). No PRA upgrades as defined by the ASME PRA Standard RA-Sa-2009 (Reference 9) have

occurred to the Internal Events PRA model since conduct of the CEOG peer review in 1999.

Attachment 6 of this enclosure identifies the baseline Core Damage Frequency (CDF) and Large Early Release Frequency (LERF) for the Internal Events and Internal Flooding PRA models. Attachment 8 provides the status of A and B level findings from the CEOG peer review of the Internal Events PRA model conducted in accordance with NEI 00-02 (Reference 2). Attachment 9 provides the status of supporting requirements not met to Capability Category II from the APS self-assessment of the Internal Events PRA model conducted in accordance with Appendix B of RG 1.200, Revision 2 (Reference 1). Attachment 10 provides the status of findings associated with supporting requirements determined not met to Capability Category II from a peer review of the Internal Flooding PRA conducted in accordance with RG 1.200, Revision 2 (Reference 1). All these findings have been closed by APS dispositions.

Fire Hazards

The one-time Technical Specification change evaluation of fire hazards will use a peer reviewed plant-specific Fire PRA model in accordance with RG 1.200, Revision 2 (Reference 1). The Fire PRA model is consistent with NUREG/CR-6850 (Reference 4) methodology with no exceptions. The APS risk management process ensures that the PRA model used in this application reflects the as-built and as-operated plant for each of the PVNGS units. Attachment 6 of this enclosure identifies the baseline CDF and LERF for the Fire PRA model. Attachment 12 of this enclosure provides the status of findings associated with supporting requirements for the internal fire PRA determined not met to Capability Category II from peer reviews conducted in accordance with RG 1.200, Revision 2 (Reference 1). Note that APS conducted its first fire PRA model peer review in accordance with RG 1.200, Revision 2 (Reference 1) in December 2012. APS conducted a second focused scope peer review of the internal fire PRA in December 2014 to address ASME PRA Standard (Reference 21) supporting requirements determined not met to Capability Category II in the first peer review. The second peer review did not just address F&Os from the first peer review on these supporting requirements, but included a complete re-review of the affected supporting requirements not met to Capability Category II in the first peer review. Therefore, the findings from the first peer review do not need to be included in Attachment 12. All of these findings have been closed by APS dispositions. At the request of the NRC, APS has provided in Attachment 16 all the F&Os from the focused scope fire PRA peer review, regardless of whether they impacted meeting an ASME PRA Standard (Reference 21) supporting requirement to Capability Category II.

Seismic Hazards

The one-time Technical Specification change evaluation for seismic hazards will use a peer reviewed plant-specific seismic PRA model in accordance with RG 1.200, Revision 2 (Reference 1). The APS risk management process ensures that the PRA model used in this application reflects the as-built and as-operated plant for each of the PVNGS units. Attachment 6 of this enclosure identifies the baseline CDF and LERF for the Seismic PRA model. Attachment 11 of this enclosure provides the status of findings associated with SRs for the seismic PRA determined not met to Capability

Category II from a peer review conducted in accordance with RG 1.200, Revision 2 (Reference 1). All these findings have been closed by APS dispositions.

Other External Hazards

All other external Hazards were screened for applicability to PVNGS per a peer reviewed plant-specific evaluation in accordance with RG 1.200, Revision 2 (Reference 1). There were no findings from the peer review. Attachment 13 of this enclosure provides a summary of the other external hazards screening results. Attachment 14 of this enclosure provides a summary of the progressive screening approach for external hazards.

PRA Uncertainty Evaluations

Sources of model uncertainty and related assumptions have been identified for the PVNGS PRA models using the guidance of NUREG-1855, Section 5.3 (Reference 5) and EPRI TR-1016737, *Treatment of Parameter and Model Uncertainty for Probabilistic Risk Assessment,* Section 3.1.1 (Reference 6). The process in these references was mostly developed to evaluate the uncertainties associated with the internal events PRA model; however, the approach can be applied to other types of hazard groups.

The list of assumptions and sources of uncertainty were reviewed to identify those which would be significant for the evaluation of this application. If the PVNGS PRA model used a non-conservative treatment, or methods which are not commonly accepted, the underlying assumption or source of uncertainty was reviewed to determine its impact on this application. Only those assumptions or sources of uncertainty that could significantly impact the configuration risk calculations were considered key for this application.

The PVNGS PRA models do not contain any recovery action or recovery factor for failed emergency DGs. The PRA models used for this application contain numerous conservatisms. The following are the major conservatisms which address potential uncertainties associated with the risk of the proposed one-time DG completion time extension request:

- The firewater to auxiliary feedwater cross-connect capability is not yet credited in the Unit 3 internal events or internal flood PRA model. This modification is only credited in the Unit 3 fire PRA model.
- Temporary equipment such as the three portable diesel generators and FLEX SG makeup pump are not credited in the PRA models. Use of this portable equipment is proceduralized and its importance to risk mitigation is emphasized in a Unit 3 Operations Night Order specifically developed for the current plant condition with DG B out of service.
- It is assumed that any fire will minimally result in a loss of main feedwater and subsequent reactor trip.
- Simplified relay fragility analyses were performed that result in higher failure probabilities than if detailed fragility analyses had been performed. This over-estimates the failure probability of an emergency diesel generator during seismic events.
- Hot shorts are conservatively assumed to occur with enough electrical contact to impose full voltage on the "target conductor."

- For automatic suppression system failure probability, the highest failure probability for fixed suppression systems was used from Appendix P of NUREG/CR-6850 (Reference 4).
- Non-rated fire barriers are always assumed to fail.
- The main control room ventilation system is assumed unavailable or isolated during a fire. This assumption is conservative since the use of the smoke purge system would remove heat and smoke from the room, improving habitability.
- It is assumed that containment isolation fails during all fire scenarios that necessitate main control room abandonment.

Key PVNGS PRA model specific assumptions and sources of uncertainty for this application are identified and dispositioned in Attachment 15. The conclusion of this review is that no additional sensitivity analyses are required to address PVNGS PRA model specific assumptions or sources of uncertainty for this application.

4.4 Review of Surveillance Tests

A review of planned surveillance testing was conducted for the proposed 62-day extended duration being requested in this LAR. There were no surveillance test requirements that required deferral or an extension beyond their required surveillance interval. There are, however, several surveillance tests that will be required to be performed on the 'A' train, while the 'B' train DG is out of service. A number of these surveillance tests do not affect the operability of the equipment during the performance of the testing. Other scheduled surveillance tests do require declaring the tested SSC inoperable during performance of the tests. Several tests will use the provisions of TS SR 3.0.2 to schedule testing outside the 62-day extended duration, when needed.

For surveillance tests coming due that do require declaring the tested SSC inoperable, APS plans to enter TS 3.8.1.B.2 and the relevant TS LCOs to perform these required tests. The equipment in test will be maintained functional during the performance of the surveillance testing. It is expected that these tests can be performed within the specified 4 hour completion time of required action 3.8.1.B.2. Specifically, the following surveillance tests have due dates during the 62-day extended completion time:

1. 73ST-9SP01 – *Essential Spray Pond Pumps – Inservice Test*
2. 73ST-9SI11 – *Low Pressure Safety Injection Pumps Miniflow – Inservice Test*
3. 73ST-9SI06 – *Containment Spray Pumps and Check Valves - Inservice Test*
4. 73ST-9XI13 - *Train A HPSI Injection And Miscellaneous SI Valves - Quarterly – Inservice Test*

The testing elements that require SSCs to be declared inoperable during testing, relate to use of temporary testing instruments or valve alignments that can be quickly restored, if needed.

4.5 Operator Training

Operators are trained on the strategies and hierarchy of procedures for LOOP that specify use of alternate power sources, including the portable DGs.

Training, briefings, and walkdowns are provided to the Operators responsible for operating the portable DGs as part of the preparation for use of the generators. Operating crews are briefed on the implementing procedure. Designated operators are familiar with instructions for starting and operating the portable DGs. Operations staff has received classroom training for FLEX strategies, which included the use of the portable DGs. Similar training is provided for the fire water to auxiliary feed water cross-tie.

5.0 REGULATORY EVALUATION

5.1 Applicable Regulatory Requirements

Relevant elements of NRC requirements, as well as a brief overview of PVNGS design features related to those requirements, are described below, with the NRC requirement identified first, followed by the related PVNGS design features in italics.

The regulations in 10 CFR 50.36(c)(2)(ii)(C), *Limiting conditions for operation*, state:

> Criterion 3. A structure, system, or component that is part of the primary success path and which functions or actuates to mitigate a design basis accident or transient that either assumes the failure of or presents a challenge to the integrity of a fission product barrier.
>
> *Technical Specification (TS) 3.8.1 currently meets this requirement and will continue to meet this requirement after the proposed one-time change is approved and implemented. The DGs act to mitigate the consequences of design basis accidents that assume a loss of offsite power. For that purpose, redundant DGs are provided to protect against a single-failure. During the current TS 21-day required action completion time for 3B DG, an operating unit is allowed by the TS to remove one of the DGs from service, thereby losing this single-failure protection. This operating condition is considered acceptable for a limited period of time and is in conformance with 10 CFR 50.36(c)(2)(i), which authorizes licensees to "follow any remedial action permitted by the technical specifications until the [limiting conditions for operation (LCO)] condition can be met."*

General Design Criterion (GDC) 17 of Appendix A of 10CFR50 for *Electric Power Systems* defines design requirements. It does not specify operating requirements or stipulate operational restrictions regarding the loss of offsite power sources. With the implementation of the proposed change, PVNGS Unit 3 will continue to meet the applicable design criteria. The proposed change is a one-time extension to the TS required action completion time. It does not affect the design basis of the plant. In addition, PVNGS Unit 3 will remain within the scope of the TS LCO 3.8.1 and is still subject to the requirements of the action statements as governed by 10 CFR 50.36. PVNGS Unit 3 meets the requirements of GDC 17 (Reference 15). The design of the on-site power source is not changed by the extension of the required action completion time and compliance with the GDC is not affected.

The proposed change to extend the completion time does not alter the design basis for loss of all alternating current power governed by 10CFR50.63, *Loss of all alternating current power* (Station Blackout Rule). In addition, although the normal

design of PVNGS Unit 3 is an alternate AC plant, the plant meets the requirements for a 16-hour coping plant, which is unchanged by this LAR.

The proposed change to extend the TS required action completion time is consistent with the criteria of RG 1.160, *Monitoring the Effectiveness of Maintenance at Nuclear Power Plants,* Revision 3, dated May 2012, and 10 CFR 50.65, *Requirements for Monitoring the Effectiveness of Maintenance at Nuclear Power Plants* (Maintenance Rule).

The regulations in 10 CFR 50.91(a)(5), provide the following allowances for issuance of an emergency license amendment:

> *"(5) Where the Commission finds that an emergency situation exists, in that failure to act in a timely way would result in derating or shutdown of a nuclear power plant, or in prevention of either resumption of operation or of increase in power output up to the plant's licensed power level, it may issue a license amendment involving no significant hazards consideration without prior notice and opportunity for a hearing or for public comment…"*

The proposed change is required due to an emergent equipment failure and is necessary to prevent shutdown of PVNGS Unit 3. The change is needed sooner than can be issued under normal or exigent circumstances and this license amendment request is timely considering the unplanned nature of the DG failure. See also Section 5.3 below.

5.2 Precedent

The proposed license amendment was developed using relevant information from an approved change (Reference 13) at another nuclear station.

5.3 <u>Emergency Circumstances</u>

During a surveillance test on December 15, 2016, the 3B DG experienced a failure and APS will not be able to complete the repair and restore operability within the current 21-day completion time. The 21-day completion time was approved in Amendment 199 to enable APS to collect and analyze data and continue the repair in order to perform the causal evaluation needed for a subsequent risk-informed license amendment. Disassembly and inspection of the damaged 3B DG has been aggressively and continuously pursued since the December 15, 2016 event.

After the 3B DG failure, APS promptly established a fully staffed Outage Control Center to schedule, manage and oversee the work activities for the repair. Several cross organizational teams were formed and maintenance is being worked on the 3B DG on a 24-hour per day schedule until completed. The causal evaluation needed to support that the failure of the 3B DG was not a common mode failure potential for the 3A DG was completed on December 30, 2016.

APS could not have reasonably anticipated or foreseen the failure of the 3B DG and could not have determined the causal evaluation without the needed disassembly and inspection. APS has made a good faith effort to submit the license amendment request in a timely manner and requests that the amendment be processed under emergency circumstances pursuant to 10 CFR 50.91(a)(5) to avoid a shutdown in accordance with

TS 3.8.1 required action B.4 at the expiration of its completion time of 21 days (approved in Amendment 199).

At the expiration of the completion time of TS 3.8.1 required action B.4, a shutdown is required to be in mode 3 in six hours and to mode 5 is 36 hours in accordance with TS 3.8.1, condition H.

5.4 No Significant Hazards Consideration

As required by 10 CFR 50.91(a), *Notice for Public Comment*, an analysis of the issue of no significant hazards consideration using the standards in 10 CFR 50.92, *Issuance of Amendment*, is presented below:

1. Does the proposed amendment involve a significant increase in the probability or consequences of an accident previously evaluated?

   Response: No.

   The proposed change is a risk-informed extension of the Unit 3 'B' train emergency diesel generator (3B DG) Technical Specification (TS) completion time from 21-days to 62-days. The Palo Verde Nuclear Generating Station (PVNGS) 3B DG provides onsite electrical power to vital systems should offsite electrical power be interrupted. It is not an initiator to any accident previously evaluated. Therefore, this extended period of operation with the 'B' train DG out-of-service will not increase the probability of an accident previously evaluated.

   The DGs act to mitigate the consequences of design basis accidents that assume a loss of offsite power. For that purpose, redundant DGs are provided to protect against a single-failure and the consequences of a loss of offsite power have already been evaluated. During the current TS 21-day required action completion time for the 3B DG, an operating unit is allowed by the TS to remove one of the DGs from service, thereby losing this single-failure protection. This operating condition is considered acceptable. The consequences of a design basis accident coincident with a failure of the redundant DG during the proposed extended completion time are the same as those during the existing 21-day TS completion time. Therefore, during the period of the proposed extended required action completion time, there is no significant increase in the consequences of an accident previously evaluated.

   Therefore, the proposed change will not involve a significant increase in the probability or consequences of an accident previously evaluated.

2. Does the proposed amendment create the possibility of a new or different kind of accident from any accident previously evaluated?

   Response: No.

   The proposed change is a risk-informed extension of the 3B DG TS completion time from 21-days to 62-days. The PVNGS 3B DG provides onsite electrical power to vital systems should offsite electrical power be interrupted. There are no new failure modes or mechanisms created due to plant operation for

the extended period to complete repair and to perform testing of the PVNGS 3B DG. Extended operation with an inoperable DG does not involve any modification in the operational limits or physical design of existing plant systems. There are no new accident precursors generated due to the extended required action completion time.

Therefore, the proposed change does not create the possibility of a new or different kind of accident from any accident previously evaluated.

3. Does the proposed amendment involve a significant reduction in a margin of safety?

   Response: No.

   The proposed change is a risk-informed extension of the 3B DG TS completion time from 21-days to 62-days. The PVNGS 3B DG provides onsite electrical power to vital systems should offsite electrical power be interrupted. During the extended completion time, sufficient compensatory measures including supplemental power sources have been established to maintain the defense-in-depth design philosophy to ensure the electrical power system meets its design safety function. The supplemental source has the capacity to bring the unit to cold shutdown in case of a loss of offsite power concurrent with a single failure during plant operation.

Therefore, the proposed change does not involve a significant reduction in a margin of safety as defined in the basis for any TS.

5.5 Conclusion

APS concludes that operation of the facility in accordance with the proposed amendment does not involve a significant hazards consideration under the standards set forth in 10 CFR 50.92(c), and, accordingly, a finding of "no significant hazards consideration" is justified. Based on the considerations discussed above, (1) there is reasonable assurance that the health and safety of the public will not be endangered by operation in the proposed manner, (2) such activities will be conducted in compliance with the Commission's regulations, and (3) the issuance of the amendment will not be inimical to the common defense and security or the health and safety of the public.

6.0 Environmental Consideration

A review has determined that the proposed amendment would change a requirement with respect to installation or use of a facility component located within the restricted area, as defined in 10 CFR 20, *Standards for Protection Against Radiation*. However, the proposed amendment does not involve (i) a significant hazards consideration, (ii) a significant change in the types or a significant increase in the amounts of any effluents that may be released offsite, or (iii) a significant increase in individual or cumulative occupational radiation exposure. Accordingly, the proposed amendment meets the eligibility criterion for categorical exclusion set forth in 10 CFR 51.22(c)(9). Therefore, pursuant to 10 CFR 51.22(b), no environmental impact statement or environmental assessment need be prepared in connection with the proposed amendment.

7.0 References

1. Regulatory Guide 1.200, *An Approach for Determining the Technical Adequacy of Probabilistic Risk Assessment Results for Risk-Informed Activities*, Revision 2, dated March 2009
2. NEI 00-02, *Probabilistic Risk Assessment (PRA) Peer Review Process Guidance*, Nuclear Energy Institute, dated 2000
3. License Amendment Request to Revise Technical Specifications to implement Risk Informed Completion Time (ADAMS Accession Number ML15218A300) dated July 31, 2015
4. NUREG/CR-6850, EPRI/NRC-RES Fire PRA Methodology for Nuclear Power Facilities, dated September 2005
5. NUREG-1855, *Guidance on the Treatment of Uncertainties Associated with PRAs in Risk-Informed Decision Making*, dated March 2009
6. EPRI TR-1016737, *Treatment of Parameter and Model Uncertainty for Probabilistic Risk Assessments*, dated December 2008
7. Palo Verde Nuclear Generating Station, Units 1, 2, and 3, Issuance of Amendments Re: *Changes To Technical Specification 3.8.7, "Inverters-Operating"* (ADAMS Accession Number ML102670352) dated September 29, 2010
8. Palo Verde Nuclear Generating Station, Units 1, 2, and 3, Issuance Of Amendments Re: *Adoption of TSTF-425, Revision 3, "Relocate Surveillance Frequencies To Licensee Control RITSTF Initiative 5b"* (ADAMS Accession Number ML112620293) dated December 15, 2011
9. ASME/ANS RA-Sa-2009, *Standard for Level l/Large Early Release Frequency Probabilistic Risk Assessment for Nuclear Power Plant Applications*, Addendum A to RA-S-2008, ASME, New York, NY, American Nuclear Society, La Grange Park, Illinois, dated February 2009
10. Regulatory Guide 1.174, *An Approach for Using Probabilistic Risk Assessment in Risk-Informed Decisions on Plant-Specific Changes to the Licensing Basis*, Revision 2, dated April 2015.
11. Regulatory Guide 1.177, *An Approach for Plant-Specific, Risk-Informed Decisionmaking: Technical Specifications*, Revision 1, dated May 2011.
12. WCAP-16175-P-A, *Model for Failure of RCP Seals Given Loss of Seal Cooling in CE NSSS Plants*, Revision 0, March 2007
13. NRC Letter dated December 30, 2003, *South Texas Project, Unit 2 – Issuance of Amendment Concerning One-Time Allowed Outage Time Extension for No. 22 Standby Diesel Generator* (ADAMS Accession Number ML033640434)
14. Engineering Evaluation 16-15545-023, *PRA Input to second One Time Unit 3 Emergency Diesel Generator Train B License Amendment Request*, dated December 27, 2016
15. 10 CFR 50, Appendix A, General Design Criterion 17, *Electric Power Systems*
16. IEEE 308, *Institute of Electric and Electronic Engineers, Standard Criteria for Class 1E Electric Systems for Nuclear Power Generating Stations*, 1971

17. IEEE 279, *Institute of Electric and Electronic Engineers, Criteria for Protection Systems for Nuclear Power Generating Stations*, 1971

18. APS letter 102-05370, *Revised Station Blackout (SBO) Evaluation*, dated October 28, 2005, (ADAMS Accession Number ML061720037)

19. APS letter 102-05465, *Response to NRC Request for Additional Information (RAI) Regarding Revised Station Blackout Evaluation*, dated April 19, 2006, (ADAMS Accession Number ML061160289)

20. NRC letter – *Palo Verde Nuclear Generating Station – NRC Integrated Inspection Report 05000528/2013003, 05000529/2013003, AND 05000530/2013003*, dated August 09, 2013 (ADAMS Accession Number ML13221A202)

21. ASME *Standard For Probabilistic Risk Assessment for Nuclear Power Plant Applications*, dated May 30, 2000

ATTACHMENT 1

Marked-up Technical Specifications Page

3.8.1-3

ACTIONS

CONDITION	REQUIRED ACTION		COMPLETION TIME
B. (continued)	B.4	Restore DG to OPERABLE status.	---------NOTE--------- For the Unit 3 Train B DG failure on December 15, 2016, restore the inoperable DG to OPERABLE status within 21 days. 62 days ---------- 10 days
C. Two required offsite circuits inoperable.	C.1	Declare required feature(s) inoperable when its redundant required feature(s) is inoperable.	12 hours from discovery of Condition C concurrent with inoperability of redundant required feature(s)
	AND		
	C.2	Restore one required offsite circuit to OPERABLE status.	24 hours

(continued)

ATTACHMENT 2

Revised Technical Specifications Page (Clean Copy)

3.8.1-3

ACTIONS

CONDITION	REQUIRED ACTION	COMPLETION TIME
B. (continued)	B.4 Restore DG to OPERABLE status.	---------NOTE--------- For the Unit 3 Train B DG failure on December 15, 2016, restore the inoperable DG to OPERABLE status within 62 days. ---------- 10 days
C. Two required offsite circuits inoperable.	C.1 Declare required feature(s) inoperable when its redundant required feature(s) is inoperable.	12 hours from discovery of Condition C concurrent with inoperability of redundant required feature(s)
	AND	
	C.2 Restore one required offsite circuit to OPERABLE status.	24 hours

(continued)

ATTACHMENT 3

Compensatory Measures and Commitments

By letter number 102-07410 (ADAMS Accession Number ML16356A715), dated December 23, 2016, Arizona Public Service Company (APS) indicated that the following compensatory measures (1 -13, 19-31) are formal regulatory commitments. Commitments 16 through 18 are new and support this risk-informed LAR. Each of these measures will remain commitments as part of this risk-informed license amendment request (LAR).

1. The redundant train 'A' DG (along with all of its required systems, subsystems, trains, components, and devices) will be verified OPERABLE (as required by Technical Specification) and no discretionary maintenance activities will be scheduled on the redundant (OPERABLE) DG.
2. No discretionary maintenance activities will be scheduled on the SBOGs.
3. No discretionary maintenance activities will be scheduled on the startup transformers.
4. No discretionary maintenance activities will be scheduled in the Salt River Project (SRP) switchyard or the unit's 13.8 kV power supply lines and transformers which could cause a line outage or challenge off site power availability to the unit utilizing the extended DG completion time.
5. All activity, including access, in the SRP switchyard shall be closely monitored and controlled.
6. The SBOGs will not be used for non-safety functions (i.e., power peaking to the grid).
7. All maintenance activities associated with Unit 3 will be assessed and managed per 10 CFR 50.65(a)(4) (Maintenance Rule). Planned work will be controlled during the extended completion time so that Unit 3 does not voluntarily enter a YELLOW Risk Management Action Level.
8. The OPERABILITY of the steam driven auxiliary feedwater pump will be verified before entering the extended DG completion time.
9. The system dispatcher will be contacted once per day and informed of the DG status, along with the power needs of the facility.
10. Should a severe weather warning be issued for the local area that could affect the SRP switchyard or the offsite power supply during the extended DG completion time, an operator will be available locally at the SBOG should local operation of the SBOG be required as a result of on-site weather related damage.
11. No discretionary maintenance will be allowed on the main and unit auxiliary transformers associated with the unit.
12. APS has provided three portable diesel generators to ensure the ability to bring Unit 3 to cold shutdown in the event of a LOOP during the extended time period that the Unit 3 train 'B' DG is inoperable. The three portable diesel generators operate in parallel as a set. The result is that the three portable diesel generators are sufficient to enable a cold shutdown of Unit 3 in the event of a LOOP with a single failure during the extended time period while the Unit 3 train 'B' DG is inoperable. The three portable diesel generators are deployed and physically connected to the Unit 3 train 'B' 4.16 kV AC FLEX connection box for the duration of the extended DG completion time.
13. The portable DGs have been verified available and functional by the completion of a test run prior to the initial period of extended allowable outage time.
14. A diesel-driven FLEX SG Makeup Pump is deployed to its FLEX pad at Unit 3 for the duration of the extended DG completion time.
15. The following equipment will be protected by signage/chains for the duration of the extended completion time to prevent inadvertent impact from walkdowns, inspections, maintenance and potential for transient combustible fires:

ATTACHMENT 3

Compensatory Measures and Commitments

   a. Both SBOGs
   b. Unit 3 train 'A' DG
   c. Unit 3 train 'A' Engineered Safety Features (ESF) Switchgear, DC equipment and DC Battery Rooms
   d. Three AC portable diesel generators deployed at Unit 3 and their connections to the train 'B' FLEX 4.16 kV AC connection box
   e. Diesel-driven FLEX SG Makeup Pump deployed at Unit 3
   f. Turbine driven auxiliary feedwater pump
   g. Fire pumps, diesel and electric

16. Establish transient combustible and hot work exclusion zones by procedure and using barriers/signage in the following compartments, and conducting shiftly walkdowns of these zones by the Fire Marshal or his designee:
    a. Fire zones FCCOR2 (120' Corridor Building) and FCCOR2A (120' Corridor Riser Shaft)
    b. Fire zones FCTB04 (upper level only, non-class DC Equipment, [FCTB04-TRAN1])
    c. Fire zone FC86A (train 'A' Seismic Gap, make part of train 'A' Electrical Protected Equipment)
    d. Fire zone FCTB100 zone ZT1G (SW corner, south half of 100' Turbine between columns TA and TC)
17. An additional dedicated auxiliary operator will be added to each shift to implement the auxiliary feedwater cross-tie.
18. A continuous fire watch with a fire extinguisher and training to utilize the extinguisher will be posted in fire zone FCCOR2 (120' Corridor Building).
19. The system load dispatcher will be contacted once per day to ensure no significant grid perturbations (high grid loading unable to withstand a single contingency of line or generation outage) are expected during the extended allowed outage time.
20. Component testing or maintenance of safety systems and important nonsafety equipment in the off-site power systems that can increase the likelihood of a plant transient (unit trip) or LOOP will be avoided.
21. Discretionary work will be prohibited in the SRP switchyard during the extended Unit 3 train 'B' DG TS 3.8.1 Condition B required action completion time.
22. TS required systems, subsystems, trains, components, and devices that depend on the remaining power sources will be verified to be operable and positive measures will be provided to preclude discretionary testing or maintenance activities on these systems, subsystems, trains, components, and devices.
23. Steam-driven emergency feed water pump will be controlled as protected equipment.
24. Within 24 hours following unavailability of a portable DG, Unit 3 will enter TS condition 3.8.1.H to place the unit in Mode 3 within 6 hours.
25. Availability of the portable DGs will be verified once per shift.
26. Approval of transient combustibles and hot work in Unit 3 will be controlled by the outage control center (OCC).
27. There will be an OCC position responsible for oversight and monitoring of the compensatory measures and the actions described in this attachment.
28. In case APS determines prior to expiration of the extended completion time, a common failure mode does exist, then APS will shut down the plant.
29. An auxiliary operator (AO) on each shift will be dedicated to perform pre-start checks of the portable generators each shift. This dedicated AO will perform the emergency start

ATTACHMENT 3

Compensatory Measures and Commitments

of the portable generators when directed and monitor their operation. The dedicated AO will have no other assigned duties during the extended completion time.

30. In the event of a reactor trip with a loss of off-site power, the Area 4 (Control Building) AO, will perform the required electrical system alignments, as directed by the control room, to restore power to the 'B' train Class 1 E 4.16 kV bus using the portable generators, in accordance with station procedures.
31. In the event of a reactor trip with a loss of off-site power, one of the on-shift reactor operators will be assigned to perform and direct actions to restore power to the 'B' train Class 1 E 4.16 kV bus using the portable generators. During the event, this reactor operator will not be assigned other duties until completion of power restoration.

ATTACHMENT 4

Causal Evaluation of Unit 3 DG Failure

Palo Verde
Nuclear Generating Station

Engineering Evaluation

ENG WO # 16-19864-37

Page 1 of 14

No Restriction ☒
Proprietary ☐
Safeguards ☐

Related CR: 16-19864

Problem Summary

On December 15th, 2016 the Unit 3B Emergency Diesel Generator experienced a failure during a monthly surveillance test. An engineering evaluation is needed to document investigation findings and evaluate common mode failure to the Unit 3A Emergency Diesel Generator.

Pre-Job Brief completion date: 12/29/2016

Peer Review Checklist completion date: 12/30/2016

50.59/72.48 Applicability, Screening, Evaluation:

Per 93DP-0LC07-01, Revision 3, 10 CFR 50.59 and 72.48 Administrative Guideline, section 5.2.6.2.g, engineering evaluations to explain a plant observation and has a clear statement that there is no change to plant operation or design resulting from this analysis do not require further 50.59 screening. In this case engineering evaluation 16-19864-37 is evaluating whether the failure of the unit 3, train B diesel generator has the potential for a further extent of cause (i.e., common mode failure potential) and is not evaluating any changes to plant operation or design. Therefore no further 50.59 review is required. Applicability Determination made by Ernest Bonkoski on 12/29/16.

Supports: (CMWO, OD, etc.)

Responsible Engineer: Schrock, Jordan N(Z08219) Digitally signed by Schrock, Jordan N(Z08219) DN: cn=Schrock, Jordan N(Z08219) Date: 2016.12.30 15:54:13 -07'00'	Reviewer: N/A
Reviewer: N/A	Second Party Verifier: Thibodaux, Neil A(Z75043) Digitally signed by Thibodaux, Neil A(Z75043) DN: cn=Thibodaux, Neil A(Z75043) Reason: I have reviewed this document Date: 2016.12.30 15:56:44 -07'00'
Reviewer: N/A	Section Leader: Graham, Kevin T(Z99987) Digitally signed by Graham, Kevin T(Z99987) DN: cn=Graham, Kevin T(Z99987) Reason: I am approving this document Date: 2016.12.30 16:00:43 -07'00'

Background and History:

On December 15, 2016 at 03:56 AM, Emergency Diesel Generator (EDG) 3B experienced a failure of running gear (e.g., pistons, cylinder liner, connecting rods) associated with the #8 and #9 crankshaft throws during the performance of a regularly scheduled monthly surveillance test (STWO 4698721). EDG 3B was operating at approximately 2.5 MW when EDG load suddenly decreased and a low lube oil pressure trip occurred. Physical damage to EDG 3B was identified by operators responding to alarms. Damage to the #9 running gear was readily apparent based on oil and metal debris on the engine room floor as shown in Figure 1.

Figure 1: Visible Damage to EDG 3B Cylinder 9-R

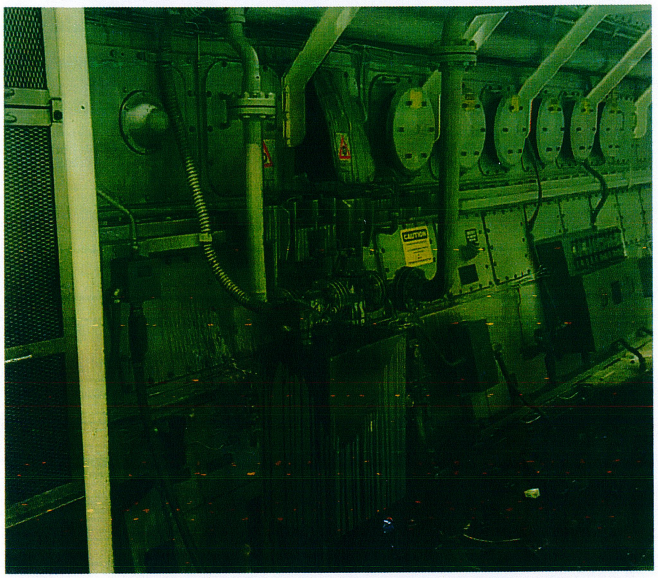

Evaluation:

Direct Cause Determination

Significant damage was observed on the #8 and #9 running gear. A systematic review of failure patterns was used to determine the initial failure started in the area of the #9 running gear based on the following:

- Both of the #9 connecting rods (master rod and articulated rod, see Figure 2) had been liberated from the crankshaft, whereas the #8 connecting rods were damaged but still attached to the crankshaft.
- The #9 pistons were fragmented and in pieces, whereas the #8 pistons were still intact.
- The #9 cylinder liners were broken by apparent impacts, whereas the #8 cylinder liners were still intact.

Figure 2: #9 Master Rod Fragments at Bottom of Crank Bay

Subsequent laboratory analysis of the #9 master rod indicated the rod had fractured at the ligament between the crank pin bore and the articulated rod pin bore (Figure 3 and Figure 4). Beach marks were visible on the facture surface which is indicative of a fatigue failure (Figure 5). The fatigue failure is in contrast to the overload failures visible in other components.

Figure 3: Crack Origination Diagram

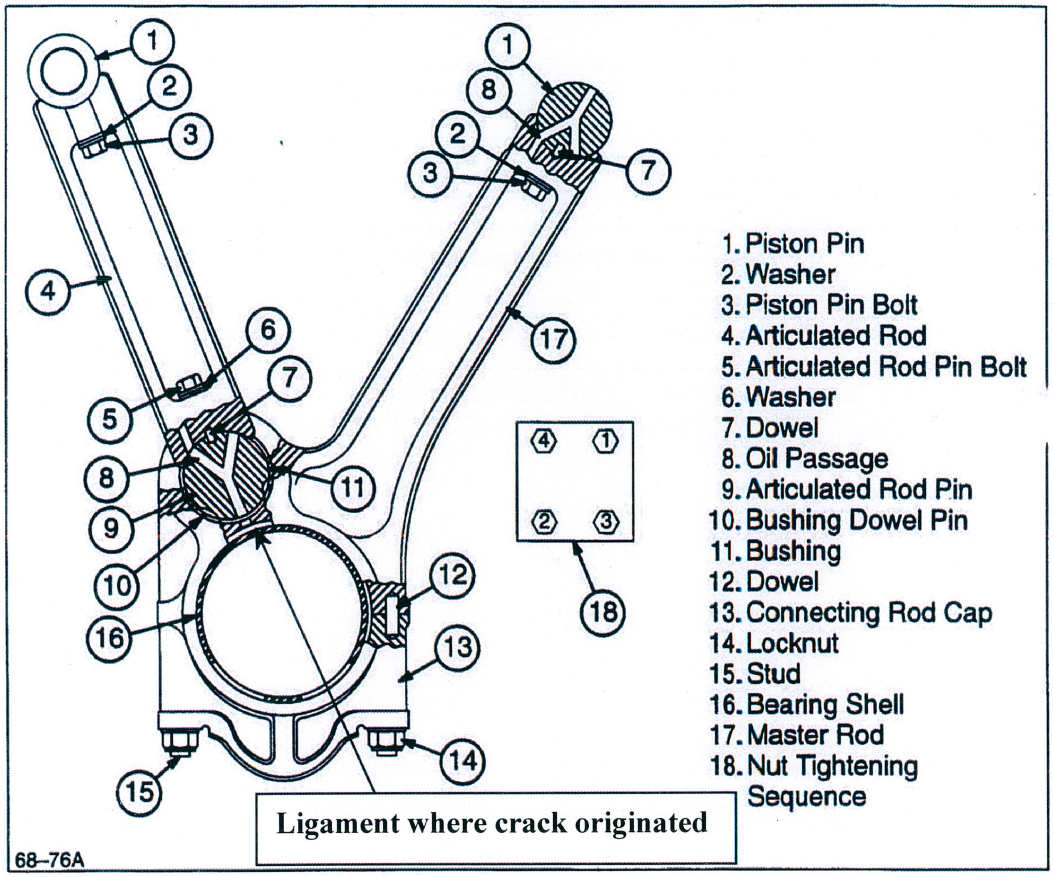

Figure 4: Connecting Rod Diagram

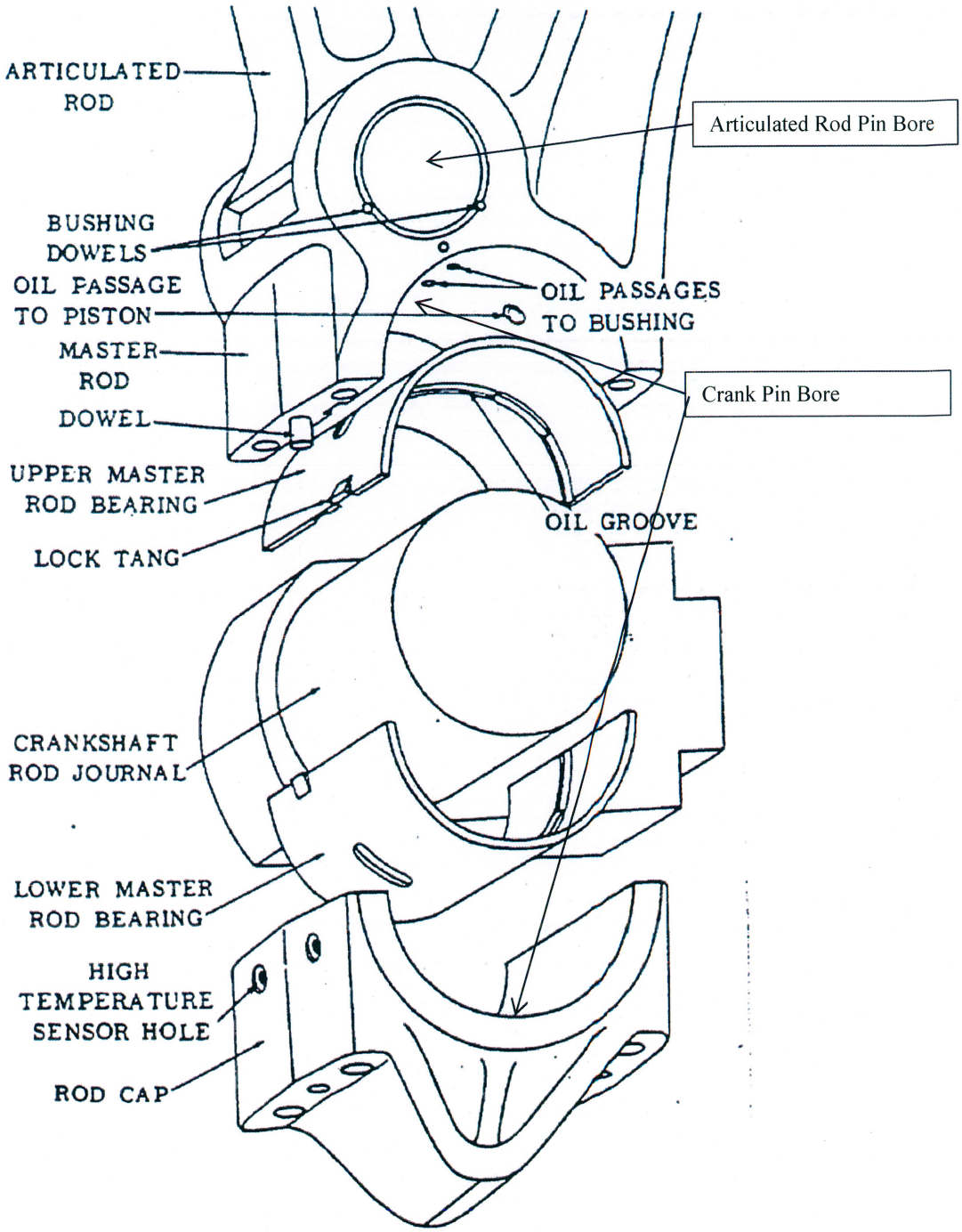

Figure 5: Fracture Beach Mark Magnification

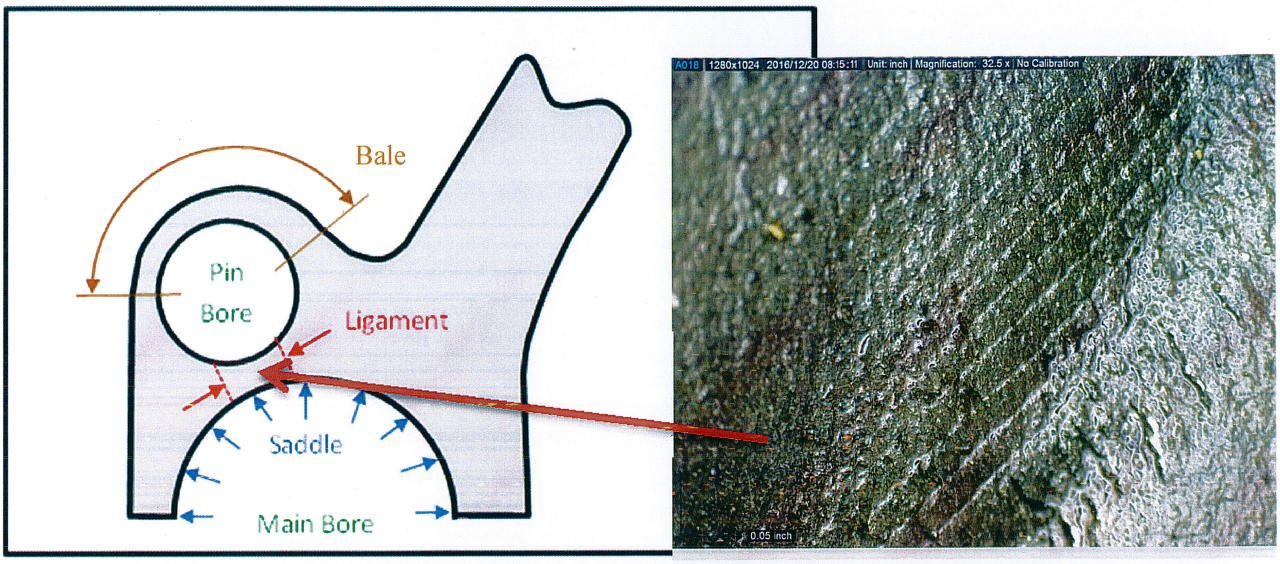

The fatigue failure of the master rod ligament liberated the articulated rod as an intact assembly. After the fracture, the free movement of the articulated rod resulted in significant consequential damage. This is supported by the following:

- The #9 running gear and crankshaft counterweights were demolished.
- The #9 articulated rod followed a tortuous path and was found in the #8 crank bay (the cavity between two main bearings within the crank case) beneath the #8 articulated rod.
- The #8 crankshaft counterweights appeared to have been damaged from striking the #9 articulated rod as it migrated to the #8 crank bay.
- Cracks in the crankcase center frame and running gear support structure.

Based on this review, it was determined that the direct cause of this failure was a fatigue fracture on the #9 master rod ligament, emanating from the crank pin bore and propagated towards the articulated pin bore.

Operating Experience Review

There have been four other master rod failures of Cooper-Bessemer engines in nuclear service due to high cycle fatigue:

Year	Plant	Engine	Master Rod	Hours Operated	Failure Mode
12/1986	Palo Verde	EDG 3B	#9 Master Rod	100	Iron Plating
11/1989	South Texas Project	EDG 22	#4 Master Rod	634	Machining
11/1994	Braidwood	EDG 2B	#1 Master Rod	1000	Iron Plating
12/2003	South Texas Project	EDG 22	#9 Master Rod	1484	Machining

Table 1: Master Rod Industry Operating Experience

Palo Verde EDG 3B 1986 Event

Manufacturing repair process was the root cause of the Palo Verde December 1986 master rod failure. The articulated rod pin bore was repaired during manufacturing with an iron-plating process, due to oversizing of the

bore during machining. The electroplated iron was more brittle than the base material and was found dis-bonded in some locations during the root cause investigation. A fatigue crack originated near the center oil hole of the articulated rod pin bore and propagated through the ligament into the crank pin bore of the master connecting rod leading to the master connecting rod failure. This high cycle fatigue failure occurred after approximately 100 hours of service time on the EDG and the master rod. There was significant engine damage, which was repaired in situ.

South Texas Project EDG 22 1989 Event
Manufacturing defect was the root cause of the South Texas Project November 1989 master rod failure. The initiation point for the fatigue crack was at a sharp edge left from a machining error during original manufacturing. An oil passage hole in the articulated rod pin bore was drilled too deep leaving an irregular flaw just under the surface of the crank pin bore. The fatigue crack originated in the crank pin bore and propagated through the ligament into the articulated rod pin bore. This high cycle fatigue failure occurred after 634 hours of service time on the EDG and the master rod. There was significant engine damage, which was repaired in situ.

Braidwood EDG 2B 1994 Event
Manufacturing defect was the root cause of the Braidwood November 1994 master rod failure. As with the Palo Verde 1986 master rod failure, the manufacturer had used an iron-plating process to build up the articulated rod pin bore, allowing it to be machined to the proper dimensions. The iron coating strongly adhered to the base material, but was more brittle than the base material. A fatigue induced crack occurred in the articulated rod pin bore "bales," and rapidly propagated. This master connecting rod had not been identified in an earlier Part 21 letter from Cooper-Bessemer. This high cycle fatigue failure occurred after approximately 1000 hours of service time on the EDG and the master rod. Unlike Palo Verde's 1986 failure or STP's 1989 failure, the failed master rod tripped the eutectic temperature sensors shutting down the diesel before extensive damage ensued. The master rod was replaced.

South Texas Project EDG 22 2003 Event
Manufacturing defect was the root cause of the South Texas Project December 2003 master rod failure. Laboratory analysis identified a number of micro-cracks in the vicinity of the crack initiation site. It was determined that two of these micro-cracks merged into the fatigue crack, which propagated causing the connecting rod to fail. The fatigue crack originated in the crank pin bore and propagated through the ligament into the articulated rod pin bore. The micro-cracks were most likely the result of a minor machining error (e.g., tool chatter due to a dull cutter). This high cycle fatigue failure occurred at 2,118 hours of operation. The STP EDG 22 was removed and transported to an alternate facility where it was completely rebuilt to original specifications.

<u>Palo Verde 2016 EDG 3B Event Findings</u>

Based on the known high cycle fatigue failure of the #9 master rod, the remaining 3B master rods were inspected. Visual inspection of the remaining rods identified what appears to be fretting marks (wear on contact surfaces in the presence of cyclic surface motion). Nearly all of the rods had some minor fretting on the outboard edge of the backside of the bearing and transfer of material between surfaces. Additional inspections with a high powered video camera (200x magnification) of the other 3B master rods was performed based on these visual indications of fretting and the known presence of micro-cracks on the STP and PVNGS #9 failed rods. These inspection results are as follows:

Master Rod Number	Visual Inspection	Magnification Inspection
1	Minor fretting near initiation location	No cracks identified
2	Minor fretting near initiation location	**Singular 0.020" crack length identified**
3	No fretting near initiation location	No cracks identified
4	Minor fretting near initiation location	**Singular 0.027"-0.040" crack length identified**
5	Minor fretting near initiation location	No cracks identified
6	No fretting near initiation location	No cracks identified
7	No fretting near initiation location	No cracks identified
8	Rolled bearings made conclusive visual inspection difficult	No cracks identified
10	Minor fretting near initiation location	No cracks identified

Table 2: 3B Master Rod Inspection Results

As noted by the results, shallow cracking was identified in the initiation location for the #2 and #4 master rods. However, the parallel micro-cracks similar to STP's 2003 event and PVNGS's 2016 #9 master rod were not found.

Subsequent internal damage was found during the disassembly of the 3B diesel engine. That data is visually summarized in Figure 6. As noted in this drawing, center frame cracks were discovered near the #8, #9 and #10 inspection windows and an indication on the #3 main bearing upper housing. Unusual wear was noted on the #2 and #10 main bearings (See Figure 7).

Figure 7: Main Bearing #10 Wear

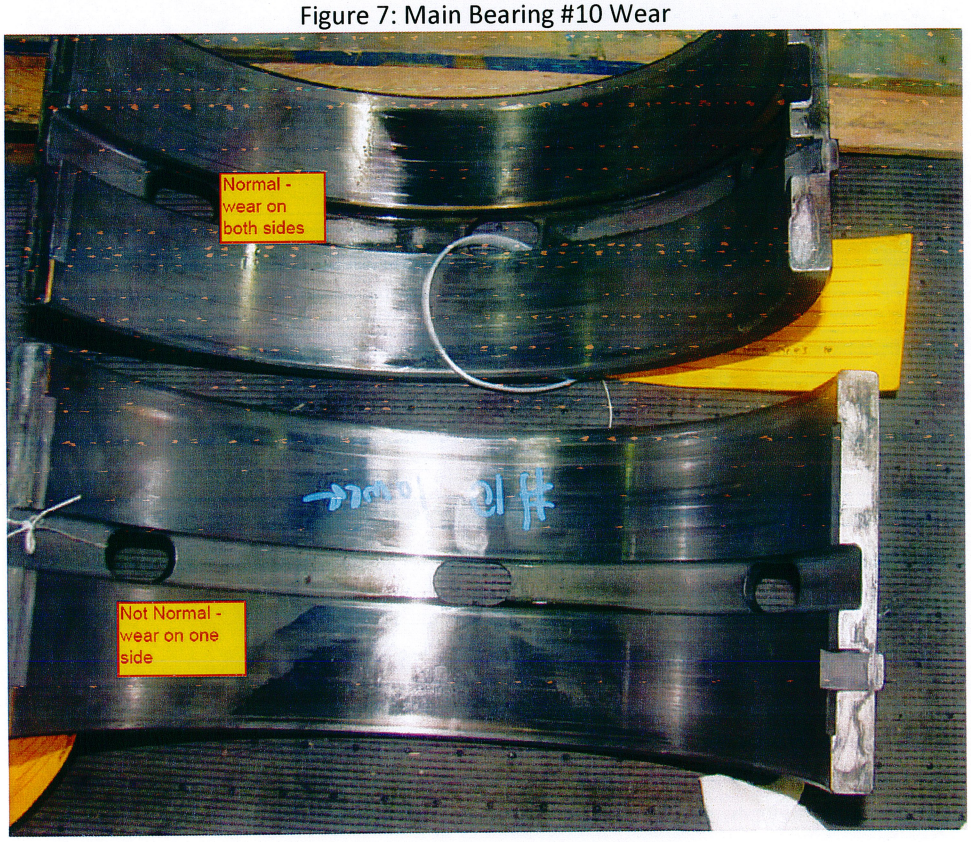

Figure 6:
Unit 3 DG 'B' Findings and History

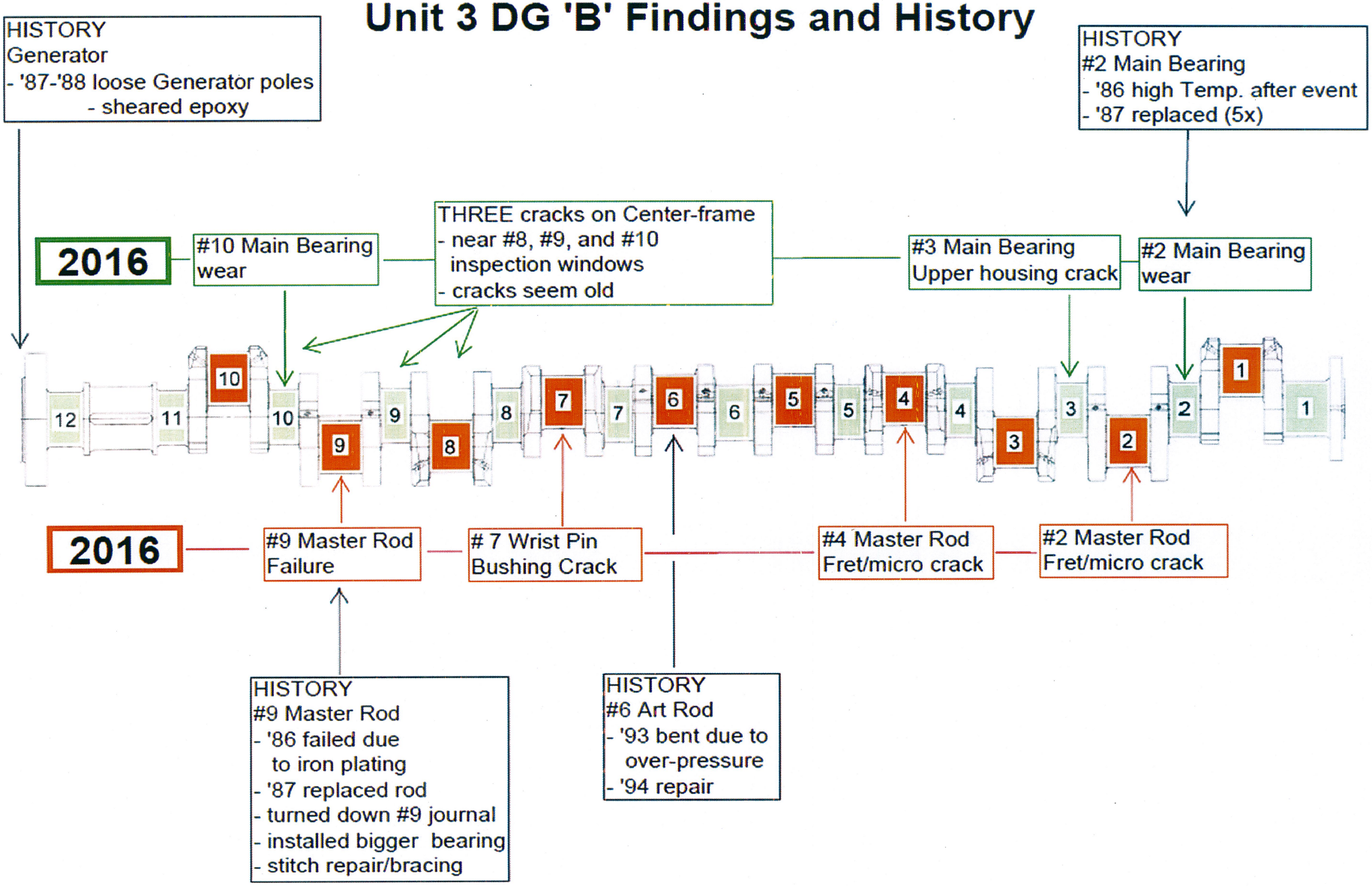

Corrective maintenance work orders (CMWOs) were reviewed for both the 3A and 3B diesel engines. A total of 470 CMWOs for the 3MDGAH01*02*ENGINE (3A) and 570 CMWOs for the 3MDGBH01*02*ENGINE (3B) were evaluated. Minor corrective maintenance was eliminated from the population. The corrective maintenance that was deemed significant was included on Figure 6.

Cause Analysis Evaluation

Conceptually, fatigue failures can be described by the following simplified equation:

Flaw + Stress = Failure

In the presence of low stress, mechanical components can tolerate a greater flaw without subsequent failure.

Cause Analysis Applicability - FLAW

Iron Plating Manufacturing Flaw:
Manufacturer's use of iron plating as a repair technique of machining errors directly caused two master connecting rods failures (i.e., Palo Verde EDG 3B in 1986 and Braidwood EDG 2B in 1994).

Both of these iron plate master rod failures were caused by high cycle fatigue and occurred with less than 1000 hours of engine operation. The iron plating was brittle and was more susceptible to crack initiation with normal engine operation. Once the fatigue crack was initiated in the iron plating, it readily propagated into the base material (i.e., forged rod).

The root cause evaluation for the 1986 PVNGS 3B engine failure identified two other iron plated rods installed in Palo Verde. As a corrective action, the #9 master rod in the Unit 2A diesel and the #2 and #9 (failed) master rod in the Unit 3B diesel were replaced.

Summary of Iron Plating Manufacturing Flaw:
EDG 3B and 2A had master rods replaced as a result of the 1987 Part 21 on iron plated rods

No iron plating was found on the 2016 failed master rod during metallurgical examination of fracture surfaces. There has been no industry recurrence of an iron plated master rod failure since the Braidwood event of 1994.

EDG 3A has never had an iron plated master rod installed, and is therefore not susceptible to an iron plated connecting rods failure mechanism. This is based on a rigorous review following the Part 21 which evaluated iron plating rods supplied/installed in the nuclear industry.

Machining Errors Manufacturing Flaw:
The manufacturer drilled an oil passage too deep, which caused a master rod failure at South Texas Project on EDG 22 in 1989. The machining error left a sharp edge on the master bore saddle which became a stress concentration location for a fatigue crack to initiate.

In addition, a manufacturing methodology change (circa 1986) left tensile stresses on some master connecting rods. The manufacturer changed from a manual machining operation to a Computer Numerical Control (CNC) machine process which initially resulted in aggressive machining on some master rods. Rods manufactured in this

manner may have had residual tensile stresses on the machined surface, which could become an initiation site for a fatigue crack. Metallurgical analysis was performed on the STP EDG 22 failed #9 master rod, which identified micro-cracks at the initiation point. These micro-cracks were attributed to residual stresses left on the machined surfaces with notable tooling marks (e.g., tool chatter). Subsequent to the STP root cause report, the rough machining was attributed to a change in their manufacturing process, (new CNC machine).

Summary of Machining Errors Manufacturing Flaw:
No over drilled passages were identified on the 2016 EDG 3B failed master rod. Palo Verde's EDG 3A is not susceptible to a master rod failure induced from an over drilled oil passage based on over 3,400 hours of engine service without a failure and the absence of any industry recurrence, including the recent EDG 3B failure.

A pattern of micro-cracking was identified on the 2016 EDG 3B failed master rod based on metallurgical examination of the fracture surfaces. The cause the of the micro-cracks is being further evaluated in the formal Palo Verde root cause investigation – the evaluation is currently considering a latent machining flaw (i.e. may have been produced by CNC) and fretting, which will be discussed below.

EDG 3B and 2A had master rods replaced as a result of the 1987 Part 21 on iron plated rods and may be susceptible to the machining induced residual stresses given the timeframe the rods were manufactured. However, EDG 2A is not susceptible to micro-cracking given new insights of the STP failure which point to the fact that misalignment introduced abnormal stresses at master rod ligament, which will be discussed later.

EDG 3A is not susceptible to machining induced residual stresses because all of its master connecting rods were produced prior to 1980.

Fretting Flaw:
The ASM (American Society of Metals) Handbook on Fatigue and Fracture defines fretting as, "A special wear process that occurs at the contact area between two materials under load and subject to minute relative motion by vibration or some other force." Fretting was identified in localized areas between the backside of the bearing and on the master rod saddle. Of specific interest to the root cause investigation team were small patches of fretting that had formed on some EDG 3B master rods (Table 2) near the initiation site of the STP 2003 and PV 2016 failures. These fretted surfaces on the master rod ligament were postulated as potential stress concentration zones, which developed during engine operation.

Fretting was supported as a possible cause based on the following observations:

- Fretting near the initiation zone was observed on several master rods.
- Fretting on the outer edges of the bearings was consistently observed.
- Fretting was asymmetrical about the crankpin bore (saddle) oil groove.
- A singular microscopic crack was identified on master rods #2 and #4 at the edge of the fretted zone. Note: These singular microscopic cracks are different than the patches of parallel micro-cracks seen in the 2003 STP and 2016 PV failures.

PVNGS and STP engines developed crankshaft misalignment (discussed below) following 1986 and 1989 catastrophic failures respectively. The misalignment concentrated asymmetric forces resulting in fretting.

Summary of Fretting Flaw:
EDG 3A susceptibility to fretting cannot be refuted by inspections; main crankshaft bearings are not normally removed from the engine for inspection. However, fretting was assessed by the EDG 3B causal factor, as per the following:

- Asymmetrical machining of the crank pin journals during the 1987 EDG 3B refurbishment
  - Tapered journal
  - Non-parallel journal (relative to the crankshaft centerline)
  - Non-cylindrical journal surface (i.e., concave, convex)
- Crankshaft misalignment induced by a prior failure, refurbishment or both

EDG 3A is not susceptible to asymmetrical machining of any crankshaft given that none of the crank pin journals have been re-machined as part of an in situ repair.

EDG 3B crankshaft bore was measured during the 2016 refurbishment and found to be misaligned, outside of manufacturing specification. The EDG 3A crankshaft alignment is not in question given that it has not incurred a master rod failure or refurbishment thereof as has occurred on EDG 3B.

<u>Cause Analysis Applicability- Stress</u>

Crank Bore Misalignment
In fatigue analysis, an “endurance limit” can be determined as a function of the material properties (strength, hardness, heat treatment, etc.). Endurance limit is the maximum stress that a material can withstand under an infinite number of stress cycles without failing from fatigue. Diesels are designed such that stresses seen in the rotating and reciprocating components are less than the endurance limit.

The Cooper-Bessemer KSV engines were designed to a specification and built to a 10CFR50 Appendix B Program. To ensure that center-frame to crankshaft stresses (impacting stresses experienced at the running gear) are below the endurance limit, the engineering specification for the KSV engine includes a main-bearing horizontal and vertical bore alignment requirement.

The as-found bore alignment was taken after the 2003 STP #9 and the 2016 PVNGS #9 master rod failures. That data is shown in Figure 8 and Figure 9.

Figure 8: PVNGS and STP As-Found Horizontal Alignment

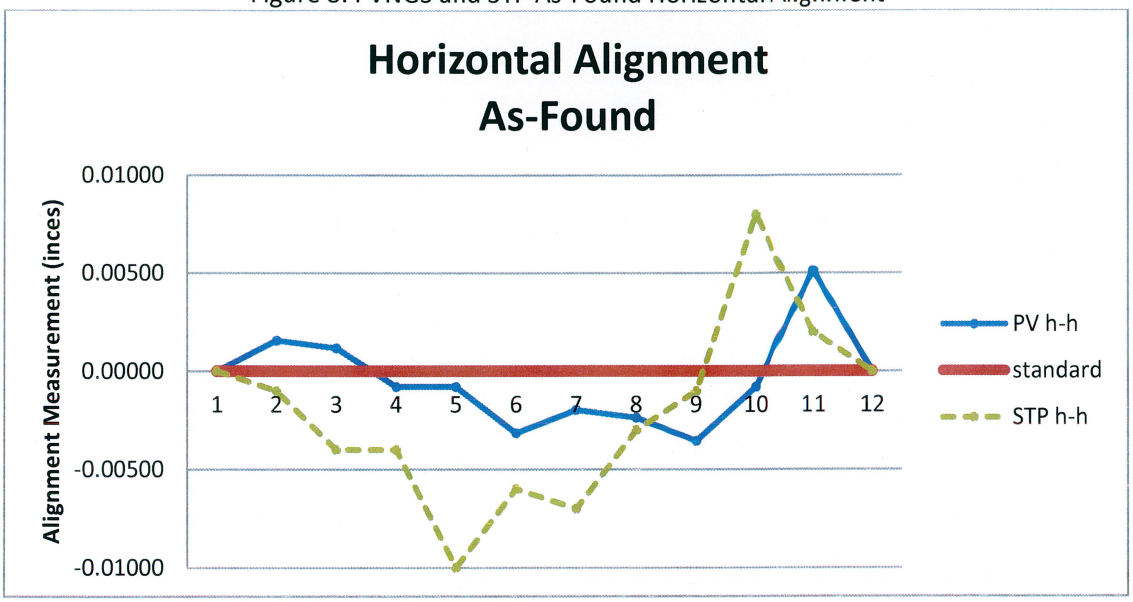

Figure 9: PVNGS and STP As-Found Vertical Alignment

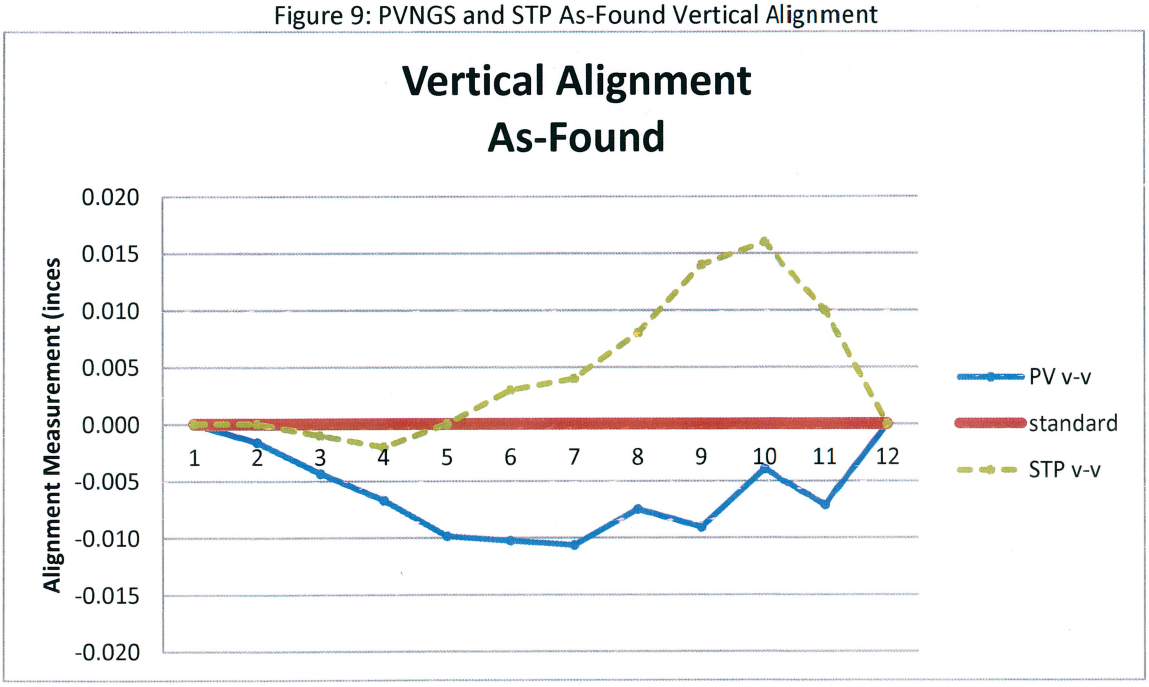

This manufacturing concentricity requirement specifies a maximum bore-to-bore deviation of 0.002" and an overall maximum deviation of 0.006." Upon inspection of the 2016 PVNGS EDG 3B main-bearing data, contrary to the specification, there are four occurrences in the horizontal alignment and six occurrences in the vertical alignment that exceed this maximum specified bore to bore deviation limit. Clustered in the last three main bearing bores

near the failure location of the engine, the deviations (both horizontally and vertically) were higher in magnitude and alternating in direction (exacerbating the stresses),

The root cause of the 1986 failure of the PVNGS EDG 3B was identified to be the latent flaw of the iron plating (described above). The repair was an in situ operation. The crankshaft was not removed to check main bore alignment. The repairs were focused at the #9 location, and included the following: the master rod was replaced and the crank-pin journal was turned down (with undersized bearing installed to achieve proper running clearances).

A chain of related events (when combined over time) led to the 2016 failure on the PVNGS EDG 3B. The initial or latent flaw (iron-plating) led to the early-life 1986 engine failure. This failure resulted in center-frame misalignment (deviations in main-bearing bore concentricity). The 1987 in situ repair did not correct the misalignment. The misalignment led to higher than design stresses.

In summary, both the STP DG 22 (see Operating Experience Review) and the PVNGS EDG 3B suffered previous failures of master rods resulting in significant consequential engine damage of the running gear and crankcase. Both of these engines were repaired in situ after their first failure. Unknowingly, in each case, this left the engine with crankshaft misalignment, which increased the stress profile of the engine, and eventually resulted in subsequent failures. As noted above, STP crankshaft misalignment was confirmed during the refurbishment of their EDG 22. The misalignment was greatest near the #9 failure location. Once confirmed, the misalignment was corrected (as part of its complete engine rebuild) and the STP DG 22 has not suffered another like failure.

The Palo Verde EDG 3A is different from the PVNGS EDG 3B and STP DG 22 in that it has not experienced any consequential mechanical events and therefore has not experienced any crankshaft misalignment. Therefore, EDG 3A alignment remains compliant to the original alignment design specification. With the proper crankshaft alignment the engine stresses remain below the endurance limit which precludes fatigue failure.

Given the uniqueness of EDG 3B, as described above, there is no common mode failure applicable to the EDG 3A engine.

<u>Comparison of 3B and 3A Vibrations</u>

EDG vibration data was collected by predictive maintenance, on a quarterly basis. Vibration data from 1st quarter 2013 until 3rd quarter 2016 was evaluated. It was observed that the vibration data for the EDG 3B has been more erratic than EDG 3A. Raw data, standard deviation and variance supports that EDG 3B has a crankshaft misalignment and EDG 3A does not.

Results and Conclusions:

Independent Assessment

An independent assessment that compares the 3A to 3B diesel engine was provided to PVNGS by MPR. The report stated the PVNGS mechanical maintenance and operating records provide no similar major events with EDG 3A as contrasted with the EDG 3B service life or the five connecting rod assembly failures within the nuclear industry. There have been no major mechanical failures in EDG 3A after a comparable number of operating hours as EDG 3B. This assessment concluded that it is extremely unlikely that the 3A engine would experience a major failure. This assessment is provided in Attachment A.

Palo Verde Assessment

The causal analysis for the 3B diesel engine has concluded that this engine had a misaligned crankshaft bore that resulted from the 1986 failure. The misalignment of the crankshaft bore resulted in sufficient cyclic stresses at the master rod ligament to initiate and propagate a fatigue crack. It is likely the misalignment also contributed to fretting between the master rod crank pin bore and bearing, contributing to the crack initiation. This crack would then propagate based on the elevated alternating stresses in the engine, which were increased at the crack location because of the misalignment. This eventually led to the cyclic fatigue failure.

Evidence indicates that the EDG 3B misalignment was due to the previous connecting rod failures and subsequent in situ repair. The remaining five diesels at PVNGS (EDG 1A, EDG 1B, EDG 2A, EDG 2B and EDG 3A) have never had a connecting rod failure or any other mechanical event that could have introduced misalignment. Additionally available performance data from the 3A EDG does not contain the same variability as the 3B EDG. Therefore, the failure mechanism that caused either of the 1986 or 2016 3B EDG failure is not present in the 3A EDG or any other PVNGS Emergency Diesel Generator.

As documented throughout this evaluation there is no susceptibility to the EDG 3A related to either the flaw and/or stress initiators that contributed to the previous Cooper-Bessemer KSV-20-cyclinder diesel engines in nuclear service. As such, there is no common mode failure to EDG 3A.

References:

STWO 4698721
Cooper-Bessemer Original Drawing: KSV-6-1A
CR-03-18103-4
PVNGS 3B 1986 Root Cause

Attachments:

Attachment A- MPR's Independent Assessment of PVNGS Unit 3 EDGs

MPR

December 29, 2016
LTR-0115-1005-1

Mr. Bruce Rash
Vice President of Engineering
Arizona Public Service Company (APS)
P.O. Box 53940
Phoenix, Arizona 85072-3940

Subject: Independent Technical Assessment of EDG 3B as Compared to EDG 3A at Palo Verde Nuclear Generating Station

Dear Mr. Rash:

The purpose of this letter is to provide you with MPR Associates' experience-based technical assessment of the past and present material condition and performance of EDG 3B as compared to EDG 3A at the Palo Verde Nuclear Generating Station (PVNGS). The following assessment is developed based on MPR's experience as the Technical Project Manager for the Cooper-Bessemer Owners Group (CBOG) since it was formed in June 1990. MPR has worked closely with Cooper-Bessemer (C-B); (now GE Oil & Gas) engineering, quality assurance and manufacturing personnel since that time. MPR has been involved in assisting with the root causes of a number of other C-B Model KSV engine failures during the past 26 years.

Background

The following provides some perspective about the 20-cylinder C-B Model KSV diesel engines. A total of twenty one (21) Model KSV 20-cylinder diesel engines were ordered and manufactured between 1975 and 1983. The 21 engines are installed as prime movers for 5 – 5.5 MWe EDGs at five U.S. nuclear power plants as follows:

- Braidwood Nuclear Station Units 1 & 2 – Four (4) engines
- Byron Nuclear Station Units 1 & 2 – Four (4) engines
- Palo Verde Nuclear Generating Station Units 1, 2 & 3 – Six (6) engines
- South Texas Project Nuclear Station Units 1 & 2 – Six (6) engines
- Susquehanna Steam Electric Station – One (1) engine

All 21 EDGs remain in service today.

EDG 3B Experience

MPR was contacted by Arizona Public Service Company (APS) to participate in the gathering and provision of technical information and details related to the failure of EDG 3B on December 15, 2016. A number of significant conditions and experiences/events serve to

differentiate EDG 3B from EDG 3A at PVNGS and the other nineteen (19) 20-cylinder EDGs in the industry. These differences include:

- In December 1986, EDG 3B failed after approximately 100 hours of operation.

- The engine continued to run at reduced speed for 40 minutes before it was finally shutdown. The failure occurred at the engine's #9 crankpin. It was determined that the master rod had been manufactured and installed after iron plating had been applied to the master rod bore surface to achieve the design inner diameter. That iron plated surface was the initiation point the crack that led to a fatigue failure of the master rod.

- The engine was repaired in situ by grinding the crankpin surface to be fit with an undersized bearing and performing metal stitching repairs to the areas around the #9L and #9R access door openings as well as the internal ridge/spine of the center frame. EDG 3B had operated for approximately 3,300 hours since those repairs and prior to the recent failure.

- In July 1994, EDG 3B had a very high combustion firing pressure event due to a broken rocker arm and an excessive charge of both air and fuel that resulted in the #6L articulating rod being bent. Bending of the forged steel articulating rod applied a major overload condition to the EDG 3B crankshaft.

- Over the past 25 years, EDG 3B has had consistent problems with maintaining the correct fuel injection timing, which may have produced higher than normal and unbalanced loading on the crankshaft.

- The failure on December 15, 2016, occurred on the same #9 crankpin location as happened in December 1986. While the root cause is still being investigated, there are indications for potential root cause that include: (1) several large cracks in the base of the engine's center frame may have contributed to crankshaft mis-alignment and abnormal stresses on the master rod bore; (2) the master rod bore surface has micro cracks that may have developed during manufacture; or (3) fretting between the bearing shell and the master rod bore that may lead to pitting and a crack initiation site.

Other 20-Cylinder Engine Events in the Nuclear Industry

- In November 1994, a C-B Model KSV 20-cylinder engine suffered a major connecting rod failure in EDG 2B at Braidwood Nuclear Station. This failure was also determined to be the result of iron plating applied to the master rod inner diameter surface. This is virtually identical to the first failure of EDG 3B at PVNGS. The broken piece of the master rod impacted an internal trip device, and the engine stopped before further damage.

- SDG 22 at South Texas Project (STP) has suffered two master connecting rod failures; the first in 1989 and the second in December 2003. The first failure occurred after approximately 200 hours of operation in the #4 crankpin area due to a mis-drilled oil hole and the second failure occurred in the #9 crankpin area. The root cause was determined to be micro cracks in the master rod big end bore that served as crack initiation site. Following the second failure, the 20-cylinder engine was removed from the STP site, totally disassembled, machined and line bored to correct main bearing mis-alignment, and completely rebuilt with a replacement crankshaft in a large machine facility in Houston, Texas. Since then, the engine has operated successfully for more than 1,000 hours.

- Each of the other eighteen (18) C-B Model KSV engines in standby service have operated for 3,000 hours or more with no connecting rod or crankshaft failures.

EDG 3A Experience

The PVNGS mechanical maintenance and operating records provide no similar major events with EDG 3A as contrasted with the EDG 3B service life or the five connecting rod assembly failures within the nuclear industry. There have been no major mechanical failures in EDG 3A after a comparable number of operating hours as EDG 3B.

Conclusion

The Model KSV diesel engine operating experience is described in detail in a recent report prepared for the CBOG, MPR-2287, Rev 2. It is important to note that all the master rods that had been iron plated, which were the source of two earlier connecting rod assembly failures, have been removed from service from all KSV 20-cylinder engines. In addition the two early failures are STP (SDG 22) and PVNGS (EDG 3B) were in effect repaired in situ without removal of their crankshafts and a complete center frame line bore to restore the engine's crankshaft alignment which likely contributed to their repeat failures.

Based on this summary of facts and details associated with the EDG 3B and EDG 3A engines and other 20-cylinder Model KSV engines, MPR has not identified a comparable extent of condition concern as relates to the continued operation of EDG 3A. MPR concludes it is extremely unlikely that EDG 3A would experience a major engine failure in the future.

The CBOG members are following very closely the events and findings associated with the most recent failure of EDG 3B and are most interested in the results. Please do not hesitate to contact me if you have any comments or questions concerning this letter.

Sincerely,

Arthur G. Killinger

Arthur G. Killinger
CBOG Project Manager

ATTACHMENT 5

Status of Plant Modifications and Evaluations Credited in the PRA

The PRA model used for determining the risk associated with the one-time extension of the Diesel Generator completion time due to the failure of the 3B DG on December 15, 2016, credits the following modifications to achieve an overall CDF and LERF consistent with NRC Regulatory Guide 1.174 risk limits. The following table provides an updated status for Unit 3 as compared to the table provided in the License Amendment Request to allow risk informed completion times (ADAMS Accession Number ML15218A300).

Plant Modification/Evaluation	**Status**
Install fuses in Control Room DC ammeter circuits to prevent secondary fires due to multiple fire induced faults.	Complete
Install fuses in non-class DC motor circuits to prevent secondary fires due to multiple fire induced faults.	Complete
Replace RCP control cables with one-hour fire rated cables.	Complete
Install an additional Steam Generator makeup capability to reduce Internal Fire PRA risk.	Complete
Implement recovery procedures for breaker coordination on class and non-class motor control centers/distribution panels that impact risk significant functions in the Internal Fire PRA.	Not required. No plant modifications or procedure changes were required to resolve breaker coordination issues.
Supporting requirements of ASME/ANS RA-Sa-2009 SY-C1 and SY-C2 shall be fully met at Capability Category II prior to use of the RICT Program.	Complete
Validate that the Unit 1 Internal Fire PRA model is bounding for Units 2 and 3 to reflect field-routed cabling or create unit-specific internal fire models for Units 2 and 3 prior to use of the RICT Program at Units 2 and 3.	Complete. The Unit 1 internal fire PRA model was adjusted to reflect a bounding evaluation of field-routed cabling for all three units.

ATTACHMENT 6

Unit 3 Baseline Average Annual CDF/LERF

Hazard	**CDF (per reactor-year)**	**LERF (per reactor-year)**
Internal events	1.3E-6	4.3E-8
Internal flooding	4.6E-7	2.1E-8
Seismic	3.1E-5	5.7E-6
Internal Fire	2.9E-5	2.4E-6
Total	**6.2E-5**[1]	**8.2E-6**[2]

Notes:
1. Total CDF meets the RG 1.174 acceptance criteria of < 1E-4 per year
2. Total LERF meets the RG 1.174 acceptance criteria of < 1E-5 per year

References:

1. Regulatory Guide 1.174, *An Approach for Using Probabilistic Risk Assessment in Risk-Informed Decisions on Plant-Specific Changes to the Licensing Basis*, Revision 2, dated April 2015.
2. 13-NS-B067, At-Power Level 1 PRA Quantification, Revision 6
3. 13-NS-C042, At-Power Level 2 PRA LERF Quantification, Revision 1
4. 13-NS-C099, Internal Flooding PRA Modeling and Quantification, Revision 2
5. Westinghouse Calculation CN-RAM-12-022, Palo Verde Seismic PRA Quantification, Revision 1

ATTACHMENT 7

ICCDP and ICLERP for One-Time Technical Specification Change

Hazard	**ICCDF (per reactor-year)**	**ICCDP (62 days)**	**ICLERF (per reactor-year)**	**ICLERP (62 days)**
Internal events	1.2E-6	2.0E-7	5.5E-8	9.3E-9
Internal flooding	<1.0E-7	<1E-8	<1.0E-8	<1.0E-9
Seismic	4.1E-6	6.9E-7	3.2E-7	5.4E-8
Internal Fire	5.3E-5	8.9E-6	1.3E-6	2.2E-7
Total	5.8E-5	**9.8E-6**[1]	1.6E-6	**2.8E-7**[2]

Notes:

1. Total ICCDP meets the RG 1.177 acceptance criteria of < 1E-5 with effective compensatory measures not credited in the quantitative risk evaluation
2. Total ICLERP meets the RG 1.177 acceptance criteria of < 1E-6 with effective compensatory measures not credited in the quantitative risk evaluation

References:

1. Regulatory Guide 1.177, *An Approach for Plant-Specific, Risk-Informed Decisionmaking: Technical Specifications*, Revision 1, dated May 2011.

ATTACHMENT 8

Internal Events PRA Peer Review A and B Level Findings

Attachment 8: Internal Events PRA Peer Review A and B Level Findings					
Observation ID	**Sub-Element(s)**	**Level**	**Status**	**Finding(s)**	**Disposition**
SY-10	SY-20	A	Closed	Demand failures of batteries are not considered (i.e., if there is a demand for direct current (DC), battery failure is more likely). Only charger failures, bus faults, circuit breaker failures, battery faults, maintenance and failure to restore after maintenance are modeled.	The finding has been resolved and closed by an update of the PRA model. Demand failure of batteries has been added to the model.
DA-04	DA-8	A	Closed	The following common cause factors are significantly lower than Idaho National Engineering Environmental Laboratory (INEEL) recommended values: pumps gamma and delta factors, emergency diesel generator failure to start beta, and auxiliary feedwater (AFW) pumps failure to run beta generic pumps – beta. Note: these are based on generic sources, therefore there is a concern that the values are significantly different from INEEL generic data. A sensitivity evaluation was performed which put these values to those similar to INEEL recommended values caused a CDF increase of approximately 7%.	The finding has been resolved and closed by an update of the PRA model. The PRA model common cause factors have been revised consistent with the NRC common cause database.
DE-07	DE-7	A	Closed	In general, human actions across systems appear to treat dependency appropriately. There are some cases where dependencies across systems are not properly addressed. RE-AFA-LOCAL is used redundantly to 1ALFW-2HRS-HR in sequences 7634, 14966, etc. (per PRA Study, 13-NS-C29 Rev. 3, PRA Change Documentation) per C-29 Rev. 3	The finding has been resolved and closed by an update of the PRA model. The PRA model human action dependencies across systems have been addressed.

Attachment 8: Internal Events PRA Peer Review A and B Level Findings					
Observation ID	**Sub-Element(s)**	**Level**	**Status**	**Finding(s)**	**Disposition**
QU-03	QU-18, QU-19	A	Closed	Currently, RE-AFA-LOCAL is being used to recover 1AFAP01-TPAFS. This is a hardware failure basic event. An evaluation should be done to determine the fraction of the basic event that is recoverable. This appears in numerous sequences [e.g., 7830 & 14989 (per PRA Study 13-NS-C29 Rev.3, per C-29 Rev.3)].	The finding has been resolved and closed by an update of the PRA model. The PRA model recovery action for the AFA pump has been modified to appropriately consider the fraction of recoverable events.
QU-04	QU-18, QU-19	A	Closed	Currently, RE-AFA-LOCAL is inappropriately being used to recover some Stuck Open Safety Valve (SOSV) events. The initial failure of the AFW Pump A causes a primary safety lift. The recovery of AFW Pump A would not prevent a lift. Therefore, RE-AFA-LOCAL should not be used when the primary safety valves lift.	The finding has been resolved and closed by an update of the PRA model. The PRA model recovery has been removed from stuck open safety valve events.
HR-04	HR-9	A	Closed	It was stated in the opening presentations that the operators would take manual control of the AFW flow path globe valves. This action is not modeled. The current model appears not to include any action to control flow with the exception of local manual control.	The finding has been resolved and closed by an update of the PRA model. The PRA model now credits remote manual operation of the AFW flow path valves.
SY-12	SY-18	A	Closed	Batteries C and D appear to have at least a 24-hour mission time prior to depletion. This results in instrumentation being available to adequately control AFW. The bases for the 24-hour mission time are not documented.	The finding has been resolved and closed by an update of the PRA documentation. The basis for the 24 hour mission time is provided.

Attachment 8: Internal Events PRA Peer Review A and B Level Findings					
Observation ID	**Sub-Element(s)**	**Level**	**Status**	**Finding(s)**	**Disposition**
HR-06	HR-20	A	Closed	The cycling of the AFW flow path globe and gate valves to maintain AFW flow is not modeled.	The finding has been resolved and closed by an update of the PRA model. The PRA model now includes cycling of the AFW flow path valves.
IE-7	IE-12	B	Closed	The Interfacing Systems Loss of Coolant Accident (ISLOCA) treatment for the shutdown cooling suction line appears to have some questionable assumptions. First, it is assumed that the Low Temperature Over Pressure (LTOP) valve would always open. While this is the most likely scenario, the LTOP valve can fail to open. Qualitative arguments were made that should this happen, the resulting LOCA would be inside containment (primarily based on relative pipe lengths). This ignores the fact that the high stress points and stress concentration points are outside containment. Furthermore, the shutdown cooling warmup crossover piping was not considered.	The finding has been resolved and closed by an update of the PRA model which now includes failure of the LTOP valve to open and includes the shutdown cooling warm up crossover piping.
IE-8	IE-5	B	Closed	Loss of multiple vital 125 VDC and loss of multiple vital 120VAC buses are not considered as initiators.	The finding has been resolved and closed by an update of the PRA model which now includes loss of multiple vital 125 VDC and 120 VAC buses as initiators.

Attachment 8: Internal Events PRA Peer Review A and B Level Findings					
Observation ID	**Sub-Element(s)**	**Level**	**Status**	**Finding(s)**	**Disposition**
AS-02	AS-04	B	Closed	A discussion of Reactor Vessel Rupture was not found. A fire PRA was not performed so accident sequences were not generated to capture the impact of a fire. Also there does not appear to be coding of locations for basic events. (Fire-Induced Vulnerability Evaluation methodology was used to assess fire impact). Internal flooding is also not specifically included in the accident sequences and no spatial data appears to have been developed (same could be used for fire and flooding). Industry Degraded Core Rulemaking (IDCORE) methodology was used to perform flooding evaluation and this determined that there are no critical flooding areas.	The finding has been resolved and closed by an update of the PRA model which now includes reactor vessel rupture event. Separate internal fire and internal flood models have subsequently been created to address the remainder of the finding.
AS-5	AS-24	B	Closed	The Modular Accident Analysis Program (MAAP) analyses used to support timing for human actions look only at a selected set of parameters of interest and neglect to look at the status of other systems which may affect timing and/or success criteria. One particular example is that the Turbine Bypass System is assumed to *always work* when evaluating the time available for recovery of AFW.	The finding has been resolved and closed by an update of the PRA model. Additional MAAP analyses have been performed and associated human reliability actions added to the PRA model to address the status of other systems which impact event timing.
SY-02	SY-1	B	Closed	There is no document that specifies the content, requirements, and formatting for each system study. This would aid external observers and newcomers in understanding the intent of the system analysis documentation.	System studies have been updated to meet ASME SY-C1 and SY-C2 Capability Category II requirements.

Attachment 8: Internal Events PRA Peer Review A and B Level Findings					
Observation ID	**Sub-Element(s)**	**Level**	**Status**	**Finding(s)**	**Disposition**
SY-03	SY-3	B	Closed	Many of the assumptions contained in the AFW analysis address plant phenomena, but contain no plant references. For example, AF024, states no significant diversion paths were identified. But no detailed discussion is provided. There are several piping taps from the condensate storage tank (CST). From a walkdown some of these taps occur high in the tank, while others associated with the condensate transfer pumps are low in the tank. It is not clear that potential diversions through the condensate transfer pumps have been examined. The drawings that illustrate the flow destination for the pumps are not referenced in the AFW system study: DGP-001, ECP-001, and EWP-001. It also appears that the assumptions themselves are not independently reviewed. As a result, the independent reviews of the system studies are not complete. Each individual assumption should have plant documentation and an independent review. The system study independent review would then only need to ensure that the assumption is applicable to and reflects the model itself. This appears to be what is done now, but without an independent review of the assumptions.	The specific issue of AFW diversion flow paths has been addressed and documented. System studies have been updated to meet ASME SY-C1 and SY-C2 Capability Category II requirements.

Attachment 8: Internal Events PRA Peer Review A and B Level Findings					
Observation ID	**Sub-Element(s)**	**Level**	**Status**	**Finding(s)**	**Disposition**
SY-05	SY-4	B	Closed	It is difficult to verify that the systems are in agreement with the as-built conditions. The current software is only capable of displaying a two by three portion of the fault tree. When attempting to verify the AFW system, only a sample of the fault tree was examined. From the portion examined no discrepancies were identified. There were no direct references between the fault tree supports and the plant drawings. For example the power supplies to the motor driven pumps are contained in the fault tree, but a plant drawing reference is not directly linked to this dependency. The back of the system study does provide a list of references, but the specific references are not linked to dependencies. Not only does this make review by outside personnel difficult, it makes internal independent reviews difficult as well.	System studies have been updated to meet ASME SY-C1 and SY-C2 Capability Category II requirements.
DA-01	DA-4	B	Closed	In quantifying the failure rate of the turbine driven AFW pump to start and run, failures were not considered based on modifications to prevent turbine overspeed trips due to excessive condensation in steam lines. That is, failures that occurred prior to 1995 (that were determined to be due to excessive condensation), were removed from consideration. A reduction in the impact of these failures would be more appropriate than eliminating these failures from consideration.	The finding has been resolved and closed by an update of the PRA documentation. Sufficient plant operating experience has elapsed since this finding was provided to substantiate exclusion of condensate line overspeed events from the failure rate of the AFA pump. This evidence was documented as part of the data update.

Attachment 8: Internal Events PRA Peer Review A and B Level Findings					
Observation ID	**Sub-Element(s)**	**Level**	**Status**	**Finding(s)**	**Disposition**
DA-02	DA-06	B	Closed	Currently for demanded components, the failure likelihood is assumed directly related to the surveillance interval. The equation used is 1-exp(-lambda*(interval)/2). This assumption is predicted on the assumption that the likelihood of failure on demand is purely proportional to the hourly failure likelihood. This is not necessarily true. Analysis should be done to ensure that the demand failure likelihoods are appropriately calculated. There are components of the demand failure rate that are not proportional to time such as shock and human errors.	The finding has been resolved and closed by an update of the PRA documentation. This issue has been resolved by providing the requested evidence in the PRA documentation.
DA-9	DA-9	B	Closed	When grouping components together for data, are component specific data differences reviewed. (i.e. are a disproportionate number of failures attributed to one component but spread out over several)? Also are the numbers of demands/run hrs comparable?	The finding has been resolved and closed by an update of the PRA documentation. This issue has been resolved by considering component specific differences in the grouping of components.
DA-07	DA-13	B	Closed	The NSAC document referenced in evaluating the loss of offsite power (LOP) frequency and duration (NSAC-203, *Losses of Offsite Power at U.S. Nuclear Power Plants thru 1993* is not current. More recent NSAC and EPRI documents are available as a reference source. These documents have the potential to increase the likelihood of offsite power recovery since LOP events and their duration have trended downward.	The finding has been resolved and closed by an update of the PRA model and documentation. Subsequent updates of the PRA model have used the current EPRI loss of offsite power data.

Attachment 8: Internal Events PRA Peer Review A and B Level Findings					
Observation ID	**Sub-Element(s)**	**Level**	**Status**	**Finding(s)**	**Disposition**
DA-08	General	B	Closed	Plant specific data was derived from a limited number of years data (1994 thru 1996)	The finding has been resolved and closed by an update of the PRA model and documentation. Plant specific data has subsequently been updated up to 2014.
HR-01	HR-1, HR-14	B	Closed	Guidance effectively describes the quantification process. Two areas were identified for possible improvements: 1. The process and degree of operation input and review is not documented. Operation input as described appears to be marginal. It was stated that operator input was always obtained for knowledge based actions and was obtained as required for complete skill and rule-based actions. A better practice would be to have all actions developed with operator input. 2. The process for selecting Human Reliability Analyses (HRAs) was not described. A process is identified in Systematic Human Action Reliability Procedure (SHARP). It appears that the SHARP process was not used. However, an undocumented, iterate process between the system analyst and the human action analyst appears to be adequate.	The finding has been resolved and closed by an update of the PRA documentation. This issue has been addressed by upgrading the human reliability analysis documentation to address the issues. The HFEs have been placed into the EPRI HRA calculator, which provides a consistent and detailed documentation of the HRAs.

Attachment 8: Internal Events PRA Peer Review A and B Level Findings					
Observation ID	**Sub-Element(s)**	**Level**	**Status**	**Finding(s)**	**Disposition**
HR-08	HR-25	B	Closed	A sensitivity study to determine human action dependencies was not performed nor documented with the PRA results. This is considered to be a good practice to ensure dependent human actions are not inappropriately used. A sensitivity analysis was performed during this review. No issues were noted.	The finding has been resolved and closed by an update of the PRA documentation. The requested sensitivity analysis was performed and documented on human action dependencies.
HR-09	HR-20	B	Closed	Human Action (HA) 1AFN-MSIS----HR is failure of the operator to override main steam isolation signal (MSIS) and align the N pump. This action includes diagnosis error. The action 1AFN-MSIS-ND-HR, is a modification factor to remove the diagnosis component of 1AFN-MSIS----HR. In the quantification of these two elements (PRA Study 13-NS-B62, Human Reliability Analysis, p90 and p91) it is stated that 1AFN-MSIS-ND-HR is to be used with 1AFN-MSIS----HR when it occurs in conjunction with failure to align or utilize the code pumps, i.e., in conjunction with another HA that had an equivalent diagnosis element. This is considered appropriate. However, as seen in cutset 10 and others, these two HAs are being used together in cutsets which do not include another HA with the equivalent diagnosis element. This is inappropriate.	The finding has been resolved and closed. The human reliability analysis dependency process no longer applies recovery actions and HEP modifications through cutset post-processing. The HRA calculator dependency function is used to manage dependencies between human actions, and this process eliminates the concern raised by the finding.

Attachment 8: Internal Events PRA Peer Review A and B Level Findings					
Observation ID	**Sub-Element(s)**	**Level**	**Status**	**Finding(s)**	**Disposition**
HR-09 continued	HR-20	B	Closed	In cutset 10, the initiator is loss of 125 VDC PKB-M42 which results in loss of one AFW pump, an MSIS, failure of the downcomer valves, failure of the turbine-driven AFW pump and the 1AFN-MSIS----HR/1AFN-MSIS-ND-HR combination. This does not appear to be appropriate because there is no other HA which includes the requisite diagnosis error. This is contrary to the stated application conditions in 13-NS-B62. The above discussion also applies for the 1AFW-MFW-----HR/1AFW-MFW-ND-HR combination and any other equivalent combinations. After looking at models in more detail, found that there was another HA in the chain. Direct solution of the trees would yield a cutset with two Human Error Probabilities (HEPs). A recovery analysis pattern removed the two related HAs and replaced them with the pairings discussed above. The concept appears to be appropriate but the manner in which it is applied is confusing at least in this case.	

Attachment 8: Internal Events PRA Peer Review A and B Level Findings					
Observation ID	**Sub-Element(s)**	**Level**	**Status**	**Finding(s)**	**Disposition**
DE-02	DE-1, DE-3, DE-5	B	Closed	As mentioned earlier there is no guidance for the system analysis process. This applies to the dependency aspect of the process as well. Section 3.3 of a system study lists the dependencies associated with the system. In general, the attachment appears to completely describe the dependencies associated with the system. I did notice several cases in the high pressure safety injection (HPSI) system study where the component numbers were not identified: 1PHAM37-480-1PW/GHLIA1-2, 1PHBM38-480-1PW/GHI2-9, 1SAARAS-TRA--1AT/GRASA-K405 (MOV 674), etc. In some cases, it was possible to determine the component dependency. In other cases, it was not. Each component and its associated dependency should be explicitly identified. The dependencies associated with hot leg injection appear to be improperly identified. MOV-321 should be 4PKCM43-125--1PW and MOV-331 should be 4PKDM44-125--1PW. The plant references for the dependencies are not directly linked to unique component dependencies. Instead, the references are listed in a single large mass in Appendix D. It would probably save time and lead to better traceability if the references are directly associated with each dependency. There are no plant references associated with the heating, ventilation and air conditioning (HVAC) dependencies dedicated to the HPSI system. This applies to 1EWAECOOLWA--1OP, 1EWBECOOLWB--1OP, 1PHBM38-480-1PW, 1SPAESPA---1OP, etc. The plant references could be a simple as Updated Final Safety Analysis Report (UFSAR) text if direct failure is assumed to be as complicated as design heat-up calculations.	The finding has been resolved and closed by an update of the PRA documentation. References for dependencies and HVAC success criteria have been added to the PRA documentation.

Attachment 8: Internal Events PRA Peer Review A and B Level Findings					
Observation ID	**Sub-Element(s)**	**Level**	**Status**	**Finding(s)**	**Disposition**
DE-05	DE-4	B	Closed	Although dependencies are identified in the system analysis, there is no dependency matrix. A dependency matrix is a valuable tool for reviewers and newcomers to the group. I believe that our evaluation of Accident Sequences would have been much more comprehensive with a dependency matrix. There are no plant references associated with the HVAC dependencies dedicated to the HPSI system. This applies to 1EWAECOOLWA--1OP, 1EWBECOOLWB--1OP, 1PHBM38-480-1PW, 1SPAESPA---1OP, etc. The plant references could be a simple as UFSAR text if direct failure is assumed to as complicated as design heat-up calculations.	The finding has been resolved and closed by an update of the PRA documentation. A dependency matrix has been added to the PRA documentation.
DE-08	DE-7	B	Closed	Since the general rule is documented as one-recovery action per sequence 13-NS-B62 (B-062), exceptions should be noted and justified. For example, the Station Blackout Generator recovery and the AFW pump A recovery actions are credited redundantly. This is probably appropriate, but the paragraph in B-062 indicates this is not typically done. Therefore justifying the exceptions is probably appropriate.	The finding has been resolved and closed by an update of the PRA documentation. Exceptions to the recovery actions were justified.
DE-10	DE-12, DE-13, DE-14	B	Closed	The documentation is considered marginal largely based on the lack of traceability of the system studies to plant documentation for each component dependency.	This issue was closed by meeting ASME SR SY-C1 for system notebook documentation.
QU-01	QU-1	B	Closed	The quantification report describes the quantification, but the process is difficult to follow unless knowledgeable about the code used and the specific steps to follow. It is sometimes hard to determine the basis for the delete term logic and the recovery patterns.	The finding has been resolved and closed by an update of the PRA documentation.

Attachment 8: Internal Events PRA Peer Review A and B Level Findings					
Observation ID	**Sub-Element(s)**	**Level**	**Status**	**Finding(s)**	**Disposition**
QU-05	QU-18, QU-19	B	Closed	It would probably be a good idea to delete the front *s in the recover search equations. I did not find any instances where this caused a problem in the existing model, but it could be causing problems by accidentally selecting the middle of a basic event verses the beginning.	The finding has been resolved and closed by an update of the PRA model recovery instructions.
QU-07	QU-25, QU-26, QU-28	B	Closed	Even though the data bases contain error factors and their code has the capability to easily perform numerical uncertainty analyses, APS did not perform any uncertainty analyses for this update of the Probabilistic Safety Assessment (PSA) and they did not document any sensitivity studies on the impact of key assumptions as part of this PSA update.	This issue has been addressed by performing and documenting the quantitative uncertainty analysis.
MU-03	MU-4	B	Closed	The types of changes tracked by the PRA and how this information is obtained are not specified in enough detail within the procedure.	The finding has been resolved and closed by an update of the PRA model update procedure.
MU-08	MU-11, MU-12	B	Closed	There is limited guidance on what needs to be considered for reevaluation when a significant change to the PRA models takes place.	The finding has been resolved and closed by an update of the PRA model update procedure.
HR-03	HR-4, HR-5, HR-6, HR-7	B	Closed	In the HRA document (B62), Section 4.2, concludes that miscalibration and common cause miscalibration of critical sensors is negligible at PVNGS. This is not consistent with the results from other PRAs. Specifically, the first supporting paragraph of dedicated teams does not minimize exposure to common cause, it actually maximizes common cause. PVNGS's staff previously identified this item.	The finding has been resolved and closed by an update of the PRA model common cause modeling to match the NRC common cause database treatment.

Attachment 8: Internal Events PRA Peer Review A and B Level Findings					
Observation ID	**Sub-Element(s)**	**Level**	**Status**	**Finding(s)**	**Disposition**
AS-03	AS-6, AS-7, AS-8, AS-24	B.	Closed	There are some differences between treatment of a small LOCA associated with a pipe break and an induced small LOCA (pressurizer safety valve reclosure) in the transient event trees. For example: • In the small LOCA event tree, successful high pressure injection and recirculation lead to questioning whether containment heat removal is successful. In the Transient Type 2 and Transient Type 3 event trees, RCS integrity can be lost if pressurizer safety valves do not reset after lifting. In the sequences from these event trees where high pressure injection and recirculation are successful, the question relating to containment heat removal is not asked. • In the small LOCA event tree, RCS depressurization and use of low pressure injection and recirculation are considered if high pressure injection or recirculation fail. In the Transient Type 2 and Transient Type 3 event trees, consideration of RCS depressurization and use of low pressure systems is not included because the likelihood of high pressure injection or high pressure recirculation are small. It would seem that this assumption should apply to both cases, or not.	The finding has been resolved and closed by an update of the PRA model and documentation.

Attachment 8: Internal Events PRA Peer Review A and B Level Findings					
Observation ID	**Sub-Element(s)**	**Level**	**Status**	**Finding(s)**	**Disposition**
SY-13	SY-17, SY-20	B	Closed	The control system study states that only single failures that cause the failure mode of interest are considered. For the Auxiliary Feed Actuation System (AFAS) generated signals, which results (these result) in modeling common cause only. Although this approach may provide a good estimate of the failure rate of these safety signals, it does not necessarily provide the confidence that the signals are appropriately modeled. For AFAS, it appears that since the AFW flow path valves must cycle that control system dependencies may have been missed. That is, normally engineered safety features actuation system (ESFAS) relays appeared to be locked-out following actuation, but for the AFAS valves, the relays need to react to the process system steam generator (S/G) low and high level). It is likely that 120 VAC Vital Bus A and B are needed.	The finding has been resolved and closed by an update of the PRA model and documentation to add the indicated control system dependencies.

ATTACHMENT 9

Internal Events PRA Self-Assessment of ASME SRs Not Met to Capability Category II

Attachment 9: Internal Events PRA Self-Assessment of ASME SRs Not Met to Capability Category II			
SR	**Status**	**Self-Assessment Comments**	**Disposition**
SY-C1	Closed	System analysis documentation developed during the Individual Plant Examination (IPE) was abandoned prior to issuance of the ASME PRA. Key elements of the system analysis documentation have been subsequently captured in other PRA documentation that is not designated as system analysis documentation.	The System analysis documentation has been updated to reflect the documentation requirements of SY-C1.
SY-C2	Closed	The following subsections of SR SY-C2 are not met: c, e, j, o, p. The original system analysis documentation developed during the IPE PRA development was abandoned prior to the issuance of the ASME PRA Standard. Other subsections of SR SY-C2 (a, b, d, f, g, h, i, k, l, m, n, q, r, s) are met by alternate documentation generated when the system analysis documentation was abandoned.	The System analysis documentation has been updated to reflect the documentation requirements of SY-C2.

ATTACHMENT 10

Internal Flood PRA Peer Review ASME SRs Not Met to Capability Category II

Attachment 10: Internal Flood PRA Peer Review ASME SRs Not Met to Capability Category II			
SR	**Status**	**Finding(s)**	**Disposition**
IFSO-B2	Closed	As noted in SRs IFSO-A1, IFSO-A3, and IFSO-A5, some areas of the documentation do not provide sufficient detail about the process used. Specific items for which improved documentation is needed include: a. Documentation of sources in the Turbine Building. b. The basis for screening sources in the Fuel, Radwaste, and Turbine Buildings (i.e., the way in which the specified criteria are met for each source is not documented). For example, a walkdown during the peer review revealed that there is section of the wet pipe fire protection (FP) system running above the turbine cooling water (TC) pumps that could potentially spray both pumps. It is not clear based on 13-NS-C093 and 13-NS-C094 that this impact was considered and dispositioned. Likewise, feedline breaks in the turbine building are assumed to be bounded by the loss of main feedwater initiating event, but may have different impacts such as loss of instrument air due to humidity impacts. c. The temperature and pressure of flood sources.	This finding has been resolved by a documentation update. The following PRA studies have been revised to provide detail about the specific items needed for improvement: a. PRA Study 13-NS-C094 section 4.2.6 was revised to include the flooding sources in the Turbine Building. b. Revised PRA Study 13-NS-C094 sections 4.2.5 and 4.2.6 to include justification for screening sources in the Fuel, Radwaste, and Turbine Building. c. The temperatures and pressures of the plant fluid systems do not need to be defined as all flooding impacts are inherently considered due to the Assumption 2 in PRA Study 13-NS-C096 which identifies that all equipment in the flood area in which a flood initiates, is assumed failed. Therefore it is not necessary to describe systems in terms of pressure and temperature to determine potential flood induced failure modes.

Attachment 10: Internal Flood PRA Peer Review ASME SRs Not Met to Capability Category II			
SR	**Status**	**Finding(s)**	**Disposition**
IFEV-A7	Closed	Potential flooding mechanisms are primarily limited to failures of components. Human-induced flooding is screened based on plant maintenance practices (see 13 NS-C093, Section 3.2, Item 4 and 13-NS-C097, Section 3.5). This does not indicate that there was any search of plant operating experience and plant maintenance procedures to verify no potential for human-induced flood mechanisms.	This finding has been resolved by a documentation update. PRA Study 13-NS-C097 Section 4.1 was revised to document the review of human and maintenance induced flooding events. Spray events such as sprinkler head failures during maintenance were considered on an individual basis in the internal flood model. A review of PVNGS maintenance guidance documentation and procedures via plant personnel discussions did not identify any maintenance procedures which would lead to an internal flooding scenario.
IE-C5	Closed	Generic pipe failure frequencies from EPRI TR-1013141 were not converted to a per reactor-year basis as required by SR IE-C5.	This finding has been resolved by a documentation update. PVNGS has revised the quantification studies to clarify that the results are specifically in units of "per critical-reactor year" that is directly applicable to At-Power operating plant states. In addition, to support PRA applications that relate to risk in terms of annualized risk, the engineering studies documenting the quantification and results were revised to also provide converted core damage frequency (CDF) and large early release frequency (LERF) in units of per reactor-year (per calendar-year).

Attachment 10: Internal Flood PRA Peer Review ASME SRs Not Met to Capability Category II			
SR	**Status**	**Finding(s)**	**Disposition**
IFQU-A7	Closed	Sources of model uncertainty and related assumptions for the Internal Flooding (IF) quantification are documented in 13-NS-C099, Section 3.1.3. As noted in other SRs related to assumptions and sources of uncertainty, there is no characterization of the impact of these assumptions and sources of uncertainty on the IF model as would be required by backward reference to SRs QU-E4 and QU-F4 in SR IFQU-A7.	This finding has been resolved by a documentation update. PRA Study 13-NS-C099 Section 4.4 was revised to incorporate the characterization of model uncertainty sources. Each assumption and source of model uncertainty has been characterized according to WCAP-17507, "PRA Model Uncertainty Database Guidance and Documentation Template for Characterization of Uncertainties" from the Pressurized Water Reactor Owners Group (PWROG) PA-RMSC-0594.
IFSN-A16	Closed	Based on the decision trees in the Scenario document 13-NS-096 Revision 0, (example Figure 4.2.1.1-1, Sequence 040A1S02), many flood sources that can be isolated have been screened out based a simple assertion that the flood can be isolated without documenting any of the following: a. Whether flood indication is available in the control room, b. How and where the flood source can be isolated, and c. Whether procedures exist for isolation and how much time is available for isolation. Based on a discussion with the plant PRA personnel, the peer review team judged the screening to be reasonable, but documentation is not adequate. The review team judged this to be met at Category I, but even for this, proper documentation is needed as noted in the finding.	This finding has been resolved by a documentation update. PRA Study 13-NS-C096 section 3.1.1 was revised to describe the reason for screening out successfully isolated floods.

Attachment 10: Internal Flood PRA Peer Review ASME SRs Not Met to Capability Category II			
SR	**Status**	**Finding(s)**	**Disposition**
IFSN-A6	Closed	RG 1.200 Revision 2 documents a qualified acceptance of this SR. The NRC resolution states that to meet Capability Category II, the impacts of flood-induced mechanisms that are not formally addressed (e.g., using the mechanisms listed under Capability Category III of this requirement) must be qualitatively assessed using conservative assumptions.	This finding has been resolved by a documentation update. Assumption 2 in PRA study 13-NS-C096 was rewritten to clarify that all components within a flood area where the flood originates were assumed susceptible and failed as a result of the flood, spray, steam, jet impingement, pipe whip, humidity, condensation and temperature concerns except when component design (e.g., water-proofing), spatial effects, low pressure source potential or other reasonable judgment could be used for limiting the effect.
IFEV-A6	Closed	There is no evidence in 13-NS-C097 that a search was made for plant-specific operating experience, plant design features, and conditions that may impact flood likelihood and no Bayesian updating was performed. However, adjustments are made to some initiating event frequencies based on system run times to account for differences between impacts when the pumps are running or in standby.	This finding has been resolved by a documentation update. PRA Study13-NS-C097 Section 4.1 was revised to add evidence of the search for plant specific operating experience. The PVNGS Site Work Management System database and License Event Reports were searched for flood type events. Additionally, the PVNGS maintenance procedures were reviewed for flood prevention guidelines. It was determined that none of the flood events identified represented a credible internal flooding scenario which would require additional modeling efforts. Additionally, the lack of internal flooding events does not provide sufficient information to perform a Bayesian update to the initiating event data, and therefore, no update was performed.

ATTACHMENT 11

Seismic PRA Peer Review ASME SRs Not Met to Capability Category II

Attachment 11: Seismic PRA Peer Review ASME SRs Not Met to Capability Category II			
SR	**Status**	**Finding(s)**	**Disposition**
SHA-E1	Closed	Insufficient site-specific velocity profile documentation exists to review the base case profile and possible uncertainties in the site shear-wave velocity profile. Because the site fundamental soil resonance may be near 1 second, a period that may be near a critical structural resonance, documentation of the epistemic uncertainty and aleatory variability of the site velocity profile should be developed.	This issue was resolved and reflected in the PRA model and documentation. New site specific data was subsequently collected as part of the NTTF 2.1 analysis.
SHA-E2	Closed	The evaluation and incorporation of uncertainties in the site response velocity profile may not be properly incorporated because of insufficient or unreviewable site-specific data and/or its documentation. Also, the site response evaluation was completed using a Senior Seismic Hazard Analysis Committee (SSHAC) Level 1 (L1) process which does not meet the ASME general Capability Category II guidelines.	A SSHAC L3 analysis was performed subsequent to the seismic PRA development as part of the NTTF response to the NRC 50.54f letter on Fukushima. The SSHAC L3 analysis produced a site hazard curve which is bounded by the SSHAC L1 hazard curve developed and used in the Seismic PRA model. Therefore, the issue is resolved by the updated SSHAC L3 hazard analysis.

Attachment 11: Seismic PRA Peer Review ASME SRs Not Met to Capability Category II			
SR	**Status**	**Finding(s)**	**Disposition**
SFR-A1	Closed	Some of the dispositioning in the complete seismic equipment list (SEL) does not have adequate documentation to justify screening of selected components. For example, component 1ENANS01 (13.8 kV Non-Class 1E Switchgear 1ENANS01) is dispositioned (screened) by the statement "Seismically induced failure of NA system (non-seismic class) assumed addressed through seismic LOP." The median fragility of seismic LOP is 0.3 g. For this screening to be viable, APS should demonstrate that the median fragility of 1ENANS01 is significantly higher than 0.3 g. However, these are non-Class 1E electrical components. This type of screening argument is used many times within the complete SEL presented in Appendix B of CN-RAM-12-015.	This issue was resolved and reflected in the PRA model and documentation. Contractor performed walkdown and screening evaluation to compare the estimated seismic capacities of selected Non-Safety Related equipment to the capacity assigned to LOP. Re-quantification was performed to reflect updated hazard, updated fragility information and updated S-PRA modeling following the resolution of Findings and Observations from the industry peer review.
SFR-C6	Closed	The CDF is dominated by peak ground acceleration (PGA) in the range of about 0.3 g. Therefore, the effect of using input motion at the 0.3g PGA level should be examined. Contrary to the self-assessment, the soil data is not sufficient to justify a Cv =0.5. The effect of using Cv = 1.0 should be examined.	This issue was resolved and reflected in the PRA model and documentation. Contractor performed evaluation of increased uncertainty for soil properties. Re-quantification was performed to reflect updated hazard, updated fragility information and updated S-PRA modeling following the resolution of Findings and Observations from the industry peer review.

Attachment 11: Seismic PRA Peer Review ASME SRs Not Met to Capability Category II			
SR	**Status**	**Finding(s)**	**Disposition**
SFR-F2	Closed	The top seven cutsets involve seismic failure events (SF-TBBLD, SF-SOIL, and SF-MF) that are potentially conservative with respect to seismic fragility and may be resulting in a seismic CDF that is not accurately reflecting the true plant response to seismic events. More analysis is required to either justify the seismic fragilities presented or to refine those values. Event SF-TBBLD represents structural failure of the turbine building, resulting in collapse onto the underground pipe tunnel from the CST. The concrete cover over the pipe tunnel is postulated to fail, resulting in failure of the AFW piping from the CST to the AFW pumps. There is the potential that the turbine building failure might not fail the pipe tunnel. Event SF-MF involves seismic failure of main feedwater piping outside of containment (balance of plant). The fragility of this piping is based on a "generic" evaluation of SC-II components and is given a median acceleration of 0.21 g.	This issue was resolved and reflected in the PRA model and documentation. Contractor performed seismic fragility investigation for PVNGS Unit 1 Main Feedwater (FW) system. Re-quantification was performed to reflect updated hazard, updated fragility information and updated S-PRA modeling following the resolution of Findings and Observations from the industry peer review.
SFR-F3	Closed	The draft report LTR-RAM-II-12-074 indicates that the draft relay assessment uses the IPEEE relay assessment as the starting point but accounts for the updated seismic hazard curve at the site. However, the report includes the following statement in Section 2.3 (Unaddressed Relays): *This list (unaddressed relays) included 69 such relays. Of the relays that have been included in the SPRA, their seismic fragility events are found in many of the dominant CDF cutsets*.	This issue was resolved and reflected in the PRA model and documentation. LTR-RAM-II-12-074, Revision 2 incorporated the 69 previously unaddressed relays. Re-quantification was performed to reflect updated hazard, updated fragility information and updated S-PRA modeling following the resolution of Findings and Observations from the industry peer review.

Attachment 11: Seismic PRA Peer Review ASME SRs Not Met to Capability Category II			
SR	**Status**	**Finding(s)**	**Disposition**
SPR-B1	Closed	CN-RAM-12-015, Rev. 0, Palo Verde SPRA Model Development, identifies the following for the Self-Assessment for SPR-B1: "The S-PRA relies on an internal event model that is assumed to be compliant with CCII of the PRA Standard." It is understood that the PVNGS PRA model received an industry PRA peer review in 1995 per the CEOG guidelines when the PRA model existed in the Risk Spectrum software environment. The current PVNGS PRA model has since been converted to the CAFTA software environment. APS has since performed a self-assessment of the PVNGS Fire PRA and Internal Events (FPIE) PRA model against the ASME/ANS Standard, but a number of SRs do not meet Capability Category II. Furthermore, as discussed in Section 4.2 of CN-RAM-12-024, there are five (5) open items from the FPIE HRA. Open Item #5 addresses that many values of T1/2 were not provided in the HRA Calculator, which indicates that the time required to perform the actions may not be accurate (FPIE SR HR-G5). In addition, Section 4.3.1.4 identifies that PVNGS only uses the Cause-Based Decision Tree Method, which is known to underestimate the impact of time constrained HEPs and as a result, current expectation for meeting supporting requirement HR-G3 is to use a combination of CBDTM and HCR methods to ensure that timing is accurately reflected.	The first part of this finding is considered resolved based on conducting a RG 1.200 self-assessment of the internal events PRA model described elsewhere in this enclosure and subsequent peer reviews of the internal flood and internal fire PRA models which are based on the internal events PRA model. The second part of this finding is considered resolved by CN-RAM-12-024 Revision 1 that updated the seismic HEPs based on timing and closed all open items from Revision 0. Re-quantification was performed to reflect updated hazard, updated fragility information and updated S-PRA modeling following the resolution of Findings and Observations from the industry peer review.

Attachment 11: Seismic PRA Peer Review ASME SRs Not Met to Capability Category II			
SR	**Status**	**Finding(s)**	**Disposition**
SPR-B6	Closed	The review team could find no evidence that operator actions following relay chatter events were reviewed to ensure task does not change (e.g., additional execution steps to reset relay) if action is in response to relay chatter-induced failure.	This issue was resolved and reflected in the PRA model and documentation. LTR-RAM-II-12-074, Revision 2 performed a comprehensive relay assessment to address this finding. Re-quantification was performed to reflect updated hazard, updated fragility information and updated S-PRA modeling following the resolution of Findings and Observations from the industry peer review.
SPR-B7	Closed	Complementary success logic is added in the SPRA logic on a sequence basis for the SIET via the SHIP software, but not for each basic event that represents a seismically-induced failure. This is a limitation of the PRA technology and software which was also noted in the Surry report. As such, this SR is assessed as Not Met. However, SR SPR-B7 has been modified in the proposed revision of the PRA Standard (i.e., Addendum B). At the moment this calculation note's publication CCI/II of the equivalent SR in Addendum B (SPR-B5) reads as follows: *In the systems-analysis models, for each basic event that represents a significant seismically-caused failure, INCLUDE the complementary "success" state where applicable to a particular SSC, and DEFINE the criterion used for the term "significant" in this activity*. Based on the wording of the new version, success logic addressing significant seismically caused failures are included in the model. With reference to the new wording of SR SPR-B5, this SR could be assessed as met at CCI/II.	This finding is considered resolved based on meeting Addendum B of the ASME PRA Std, which changed the requirement for this supporting requirement.

Attachment 11: Seismic PRA Peer Review ASME SRs Not Met to Capability Category II			
SR	**Status**	**Finding(s)**	**Disposition**
SPR-B10	Closed	Row SPR-B10 in Attachment 4.5-2 of CN-RAM-12-015 (i.e., the summary attachment of the SPRA self-assessment) identifies the need to examine the effect of including a seismically-induced *small-small* LOCA. The self-assessment identifies that Section 5.1.3.9 discusses modeling a concurrent *small* LOCA. Section 5.1.3.9 identifies that a seismic-induced Small LOCA probabilistically models a seismic-induced LOP. It is assumed that this scenario would also address the scenario for a Seismic-induced LOP with a potential for a *small-small* LOCA.	CN-RAM-12-015 Revision 1 addressed this finding. Re-quantification was performed to reflect updated hazard, updated fragility information and updated S-PRA modeling following the resolution of Findings and Observations from the industry peer review.

ATTACHMENT 12

Internal Fire PRA Peer Review ASME SRs Not Met to Capability Category II

Attachment 12: Internal Fire PRA Peer Review ASME SRs Not Met to Capability Category II			
SR	**Status**	**Finding(s)**	**Disposition**
FSS-D2	Closed	Generic Hot Gas Layer (HGL) calculations were performed using Consolidated Model of Fire and Smoke Transport (CFAST) and documented in Hughes report 0001-0014-002-002, Rev 1. The CFAST HGL results have not been applied in a manner consistent with the limitations and assumptions described in the report.	This finding has been resolved by PRA model and documentation changes. Generic CFAST evaluations were revised to be specific to account for the limitations and assumptions of the area being modeled.
FQ-E1	Closed	Several Human Failure Events (HFEs) were discovered to have a failure probability set to zero during the quantification instead of the documented screening value of 1.0 developed during the HRA task. Having the HEPs set to zero potentially impacts the quantification results and the ability to identify significant contributors to CDF, such as initiating events, accident sequences, equipment failures, common cause failures, and operator errors. There is no documentation that shows that a review of the importance of components and basic events to determine that they make logical sense was performed. There is no documentation that a review of nonsignificant cutsets or sequences was performed.	This finding has been resolved by PRA model and documentation changes. HFEs documented to have a screening value of 1.0 have been revised in the model to use this screening value. All HFE tools were reviewed, updated to be consistent with the HRA Calculator source database, and validated. A review of component and basic event importance to ensure they make logical sense was subsequently conducted and documented. Conduct of cutset reviews was added to the PRA documentation.

Attachment 12: Internal Fire PRA Peer Review ASME SRs Not Met to Capability Category II			
SR	**Status**	**Finding(s)**	**Disposition**
UNC-A1	Closed	The following statement was made after several sensitivity results attachments: "Because of the way the cutsets were created, the numbers are not correct. The exercise here is to show the ratios." This negates any of the results reported in the results attachment. The uncertainty analysis, for the most part, does not include any review of the uncertainty results. Therefore, how the PRA model was affected and a check for the reasonableness was not documented. Therefore it is not clear that a check for reasonableness was performed. There is a statement in the Uncertainty Analysis notebook that this analysis was not performed for LERF. Upon review of the notebook it was found that for some uncertainty analyses were run for both CDF and LERF. A review of the uncertainty analysis should be performed and all uncertainty analysis should be performed for CDF and LERF. Many instances were found where assumptions were found in notebooks that were not documented in the assumption section. This could lead to missing an area that needs to be addressed in the uncertainty analysis. (Review documents and verify that where the word "assumes" is used that an actual assumption is being made.)	This finding has been resolved by PRA model and documentation changes. The sensitivity results were reviewed and documented to show ratios of results. Documentation has been updated to include how the PRA model is affected by model uncertainty and related assumptions. Sources of LERF uncertainty and assumptions have been identified and documented. All assumptions used in the development of the PRA model have been reviewed and documented. Instances of modeling simplification or conservatism were so noted versus declared as default assumptions. Assumptions with the potential to significantly impact results were addressed in the Uncertainty and Sensitivity analyses

ATTACHMENT 13

External Hazards Screening

Attachment 13 External Hazards Screening			
External Hazard	**Screening Result**		
	Screened? (Y/N)	**Screening Criterion (Note 1)**	**Comment**
Aircraft Impact	Y	PS2 PS4	Airport hazard meets 1975 Standard Review Plan (SRP) requirements. Additionally, airways hazard bounding analysis per NUREG-1855 is < 1E-6/y.
Avalanche	Y	C3	Not applicable to the site because of climate and topography.
Biological Event	Y	C3, C5	Sudden influxes not applicable to the plant design [closed loop systems for Essential Cooling Water System (ECWS) and Component Cooling Water System (CWS)]. Slowly developing growth can be detected and mitigated by surveillance.
Coastal Erosion	Y	C3	Not applicable to the site because of location.
Drought	Y	C5	Plant design eliminates drought as a concern and event is slowly developing.
External Flooding	Y	PS2	Plant design meets 1975 SRP requirements.
Extreme Wind or Tornado	Y	PS2 PS4	The plant design basis tornado has a frequency < 1E-7/y. The spray pond nozzles (not protected against missiles) have a bounding median risk < 1E-7/y.
Fog	Y	C1	Limited occurrence because of arid climate and negligible impact on the plant.
Forest or Range Fire	Y	C3	Not applicable to the site because of limited vegetation.
Frost	Y	C1	Limited occurrence because of arid climate.

Attachment 13 External Hazards Screening			
External Hazard	**Screening Result**		
	Screened? (Y/N)	**Screening Criterion (Note 1)**	**Comment**
Hail	Y	C1 C4	Limited occurrence and bounded by other events for which the plant is designed. Flooding impacts covered under Intense Precipitation.
High Summer Temperature	Y	C1	Plant is designed for this hazard. Associated plant trips have not occurred and are not expected.
High Tide, Lake Level, or River Stage	Y	C3	Not applicable to the site because of location.
Hurricane	Y	C4	Covered under Extreme Wind or Tornado and Intense Precipitation.
Ice Cover	Y	C3 C1	Ice blockage causing flooding is not applicable to the site because of location (no nearby rivers and climate conditions). Plant is designed for freezing temperatures, which are infrequent and short in duration.
Industrial or Military Facility Accident	Y	PS2	Explosive hazard impacts and control room habitability impacts meet the 1975 SRP requirements (RGs 1.91 and 1.78).
Internal Flooding	N	None	PRAs addressing internal flooding have indicated this hazard typically results in CDFs ≥ 1E-6/y. Also, the ASME/ANS PRA Standard requires a detailed PRA for this hazard which is addressed in the PVNGS Internal Flooding PRA.
Internal Fire	N	None	PRAs addressing internal fire have indicated this hazard typically results in CDFs ≥ 1E-6/y. Also, the ASME/ANS PRA Standard requires a detailed PRA for this hazard which is addressed in the PVNGS Internal Fire PRA.
Landslide	Y	C3	Not applicable to the site because of topography.

Attachment 13 External Hazards Screening			
External Hazard	**Screening Result**		
	Screened? (Y/N)	**Screening Criterion (Note 1)**	**Comment**
Lightning	Y	C1	Lightning strikes causing loss of offsite power or turbine trip are contributors to the initiating event frequencies for these events. However, other causes are also included. The impacts are no greater than already modeled in the internal events PRA.
Low Lake Level or River Stage	Y	C3	Not applicable to the site because of location.
Low Winter Temperature	Y	C1 C5	Extended freezing temperatures are rare, the plant is designed for such events, and their impacts are slow to develop.
Meteorite or Satellite Impact	Y	PS4	The frequency of meteorites greater than 100 lb striking the plant is around 1E-8/y and corresponding satellite impacts is around 2E-9/y.
Pipeline Accident	Y	C3	Pipelines are not close enough to significantly impact plant structures.
Release of Chemicals in Onsite Storage	Y	PS2	Plant storage of chemicals meets 1975 SRP requirements.
River Diversion	Y	C3	Not applicable to the site because of location.
Sand or Dust Storm	Y	C1 C5	The plant is designed for such events. Also, a procedure instructs operators to replace filters before they become inoperable.
Seiche	Y	C3 C1	Not applicable to the site because of location. Onsite reservoirs and spray ponds designed for seiches.
Seismic Activity	N	None	PRAs addressing seismic activity have indicated this hazard typically results in CDFs ≥ 1E-6/y. Also, the ASME/ANS PRA Standard requires a detailed PRA or Seismic Margins Assessment (SMA) for this hazard which is addressed in the PVNGS Seismic PRA.

Attachment 13 External Hazards Screening			
External Hazard	**Screening Result**		
	Screened? (Y/N)	**Screening Criterion (Note 1)**	**Comment**
Snow	Y	C1 C4	The event damage potential is less than other events for which the plant is designed. Potential flooding impacts covered under external flooding.
Soil Shrink-Swell Consolidation	Y	C1 C5	The potential for this hazard is low at the site, the plant design considers this hazard, and the hazard is slowly developing and can be mitigated.
Storm Surge	Y	C3	Not applicable to the site because of location.
Toxic Gas	Y	C4	Toxic gas covered under release of chemicals in onsite storage, industrial or military facility accident, and transportation accident.
Transportation Accident	Y	PS2 PS4 C3 C4	Potential accidents meet the 1975 SRP requirements. Bounding analyses used for offsite rail shipment of chlorine gas and onsite truck shipment of ammonium hydroxide. Marine accident not applicable to the site because of location. Aviation and pipeline accidents covered under those specific categories.
Tsunami	Y	C3	Not applicable to the site because of location.
Turbine-Generated Missiles	Y	PS2	Potential accidents meet the 1975 SRP requirements.
Volcanic Activity	Y	C3	Not applicable to the site because of location.
Waves	Y	C3 C4	Waves associated with adjacent large bodies of water are not applicable to the site. Waves associated with external flooding are covered under that hazard.
Note 1 – See Attachment 14 for descriptions of the screening criteria.			

ATTACHMENT 14

Progressive Screening Approach for Addressing External Hazards

Attachment 14 Progressive Screening Approach for Addressing External Hazards			
Event Analysis	**Criterion**	**Source**	**Comments**
Initial Preliminary Screening	C1. Event damage potential is < events for which plant is designed.	NUREG/CR-2300 and ASME/ANS Standard RA-Sa-2009	
	C2. Event has lower mean frequency and no worse consequences than other events analyzed.	NUREG/CR-2300 and ASME/ANS Standard RA-Sa-2009	
	C3. Event cannot occur close enough to the plant to affect it.	NUREG/CR-2300 and ASME/ANS Standard RA-Sa-2009	
	C4. Event is included in the definition of another event.	NUREG/CR-2300 and ASME/ANS Standard RA-Sa-2009	Not used to screen. Used only to include within another event.
	C5. Event develops slowly, allowing adequate time to eliminate or mitigate the threat.	ASME/ANS Standard	
Progressive Screening	PS1. Design basis hazard cannot cause a core damage accident.	ASME/ANS Standard RA-Sa-2009	
	PS2. Design basis for the event meets the criteria in the NRC 1975 Standard Review Plan (SRP).	NUREG-1407 and ASME/ANS Standard RA-Sa-2009	
	PS3. Design basis event mean frequency is < 1E-5/y and the mean conditional core damage probability is < 0.1.	NUREG-1407 as modified in ASME/ANS Standard RA-Sa-2009	
	PS4. Bounding mean CDF is < 1E-6/y.	NUREG-1407 and ASME/ANS Standard RA-Sa-2009	

Attachment 14 Progressive Screening Approach for Addressing External Hazards			
Event Analysis	**Criterion**	**Source**	**Comments**
Detailed PRA	Screening not successful. PRA needs to meet requirements in the ASME/ANS PRA Standard.	NUREG-1407 and ASME/ANS Standard RA-Sa-2009	

ATTACHMENT 15

Disposition of Key Assumptions/Sources of Uncertainty

Attachment 15 Disposition of Key Assumptions/Sources of Uncertainty		
Assumption / Uncertainty	**Discussion**	**Disposition**
The only plant system modeled in the PRA that is shared between the three units is the station blackout generators (SBOGs). Simultaneous multiple unit station blackout conditions are screened out based on low probability. SBOGs are assumed aligned to one unit only during an event.	SBOGs can be aligned to multiple units to supply limited loads.	The existing PRA model conservatively does not credit SBOGs in more than one unit. Therefore, no sensitivity analysis is required for this application.

Attachment 15 Disposition of Key Assumptions/Sources of Uncertainty		
Assumption / Uncertainty	**Discussion**	**Disposition**
Reactor Coolant Pump (RCP) Seal Leak or Rupture	RCP Seal Leak or Rupture is not modeled as a loss of RCS Inventory safety function. Based on Westinghouse WCAP-15749 (Reference 1) and pump seal vendor information, it was concluded that because of the very tight clearances, leakage into the seal package from the RCS is limited to about 17 gpm per pump. Each of the four RCPs has a seal package which consists of three seals. As a result, even if the seal package on all four RCPs failed, the total leak rate would be within the capacity of two charging pumps and does not qualify as a LOCA. An analysis showed that continuing to model RCP seal leakage and requiring charging pumps to mitigate the leakage represented an insignificant contribution to CDF or LERF, even assuming one of the three seals on each pump failed. The analysis also showed that modeling catastrophic failure due to operator failure to secure the pumps upon loss of cooling and seal injection was an insignificant contributor to CDF or LERF.	No sensitivity analysis is required for this application.

Attachment 15 Disposition of Key Assumptions/Sources of Uncertainty		
Assumption / Uncertainty	**Discussion**	**Disposition**
Loss of Coolant Accident (LOCA) Frequencies	NUREG/CR-6928 (Reference 2) restated the results from NUREG-1829 (Reference 3). The LOCA frequencies are based upon expert elicitations. The LOCA sizes identified by the NRC are different from those estimated for PVNGS.	The slight variance in the range of break sizes for different LOCAs is not significant and is judged to have minimal impact on LOCA frequencies, within the uncertainties associated with the expert elicitation values, and of insignificant impact. Therefore, no sensitivity analysis is required for this application.
Loss of Off-site Power (LOP) Frequency	The national LOP data presented in the latest EPRI events reports referenced in PRA Study 13-NS-C004 (Reference 4) was used to obtain point-estimates for switchyard centered and severe weather related LOP frequencies. The EPRI Reports indicate that the generic LOP data is subject to user modifications and screenings to fit the local plant designs and environmental conditions. This approach of LOP screening is considered reasonable and necessary to avoid erroneous skewing of the LOP data. The frequency of extreme weather LOP category was obtained as that of the frequency of tornado occurrence with category F2 or higher. The frequency of grid related LOP was obtained by Bayesian updating the reported value for western region (Western Electricity Coordinating Council) in the Draft NRC NUREG/CR-INEEL/EXT-04-02326 (Reference 5).	The LOP frequencies are based on recent industry data and are appropriate to represent plant-specific conditions. SBOGs, as well as other additional electric power supplies, are available on site to mitigate LOP. Therefore, no sensitivity analysis is required for this application.

Attachment 15 Disposition of Key Assumptions/Sources of Uncertainty		
Assumption / Uncertainty	**Discussion**	**Disposition**
Loss of Off-site Power (LOP) at Switchyard Associated Non-Recovery Probabilities	The probabilities of offsite power non-recoveries were obtained from Table 4-1 of the draft NRC NUREG/CR-INEEL/EXT-04-02326 (Reference 5). The error factors associated with LOP frequencies and LOP non-recovery probabilities were obtained from draft NRC NUREG/CR-INEEL/EXT-04-02326 (Reference 5) (when provided); otherwise, by using available in-house statistical programs for lognormal and Weibull distributions.	The offsite power non-recovery probabilities are based on the best available data and are appropriate to represent plant-specific conditions. SBO diesel generators, as well as other additional electric power supplies, are available on site to mitigate LOP. Therefore, no sensitivity analysis is required for this application.
Battery Life Assumptions	The PVNGS batteries are not credited in the long term, because they are conservatively assumed to be discharged after 2 hours per calculation 01-EC-PK-0207. Although the IEEE Class 1E batteries are designed to operate for 2 hours, Engineering has determined that the class batteries' life is at least 6 hours in calculation 01-EC-PK-0207. Thus they are available for power recovery at the 3-hour point on the incident timeline.	Crediting the actual higher capacities of the batteries and updated load shedding actions from Fukushima driven procedure changes would result in additional mitigation capabilities made available. Therefore, no sensitivity analysis is required for this application.

Attachment 15 Disposition of Key Assumptions/Sources of Uncertainty		
Assumption / Uncertainty	**Discussion**	**Disposition**
Human Failure Events (HFEs) during a seismic event	Accessibility for completion of non-screened human failure events (HFE) during a seismic event is assumed possible for all non-screened HFEs besides those which are assumed to fail in the case where the corridor building or turbine building collapses. Both the collapse of the corridor building and turbine building and their impact on the access to the Main Steam Support Structure is considered in the Seismic PRA model. There is a pinch point that leads into the MSSS that could restrict movement into the MSSS which would prevent local MSSS actions from being performed.	A sensitivity analysis was performed evaluating the impact of not crediting the subject HFEs and there was minimal impact on the CDF and LERF. Therefore, no additional sensitivity analysis is required for this application.
Seismic performance shaping factors (PSFs) with respect to seismic-induced flooding.	Seismic-only PSFs applied to the internal events HEPs will over-ride the flooding PSFs based on the consideration that the seismic events are more global events than the specific flooding events. No additional modifications are made to the internal events HEP to consider the possibility of seismic-induced flooding events.	This is considered a conservative assumption. Therefore, no sensitivity analysis is required for this application.

Attachment 15 Disposition of Key Assumptions/Sources of Uncertainty		
Assumption / Uncertainty	**Discussion**	**Disposition**
The Seismic PRA HFE dependency analysis	The Seismic PRA dependency analysis assumes that once an accident sequence is initiated, the operator action timing for a seismically induced event is similar to that of an internally induced event for main control room actions.	The modification of the timing available due to seismic considerations may result in a longer response or identification time and consequently a higher HEP. A sensitivity analysis was performed in the seismic PRA quantification increasing the failure probability all HEPs to 1.0, resulting in a 39.36% increase in CDF. For this application, the seismic risk contribution from the emergency diesel generator unavailability is only 5.5% of the total ICCDF and 5.1% of the total ICLERF. Therefore, no sensitivity evaluation is required for this application.
Seismic PRA Weighting factors applied to three approaches	There is no standardized method to calculate human error probabilities (HEP) in a seismic PRA. Therefore, a mean HEP for each basic event was calculated by combining three accepted approaches (Surry, Kernkraftwerk Muhleberg (KKM), and Swiss Federal Nuclear Safety Inspectorate (ENSI)) using the following weighting factors: 0.7, 0.15, 0.15, respectively.	More emphasis was given to the Surry method since it was a selective combination of previous approaches and the most recently performed and published method. However, the Surry method has the potential to be the least conservative approach among the three methods. A sensitivity analysis was performed that ran the Seismic PRA model using only the KKM and ENSI approaches, equally weighted. The change in CDF and LERF was -1.63% and 0.42%. Therefore, no additional sensitivity analysis is required for this application.

Attachment 15 Disposition of Key Assumptions/Sources of Uncertainty		
Assumption / Uncertainty	**Discussion**	**Disposition**
Relay chatter correlation	Relay chatter between relays of the same manufacturer, model number, and plant location, i.e., building and elevation were assumed to be fully correlated. Also, each relay identified as a control switch, push button, or motor starter are fully correlated with other generic, like components.	This is a conservative assumption because the demand experienced by a relay is dictated by in-cabinet response and not the in-structure response spectra (ISRS) which the binning is based. Therefore, no sensitivity analysis is required for this application.
Simplified Relay Fragility Parameters	Low risk importance relays (based on Risk Achievement Worth) were treated with a simplified fragility analysis and higher importance relays (10 different types) were treated with a detailed fragility analysis. The simplified relay chatter fragility analysis assumed a βc of 0.35 based on engineering judgment.	This assumption is reasonable given that none of the βc values for the relays evaluated using the detailed fragility analysis were determined to have a βc below 0.33 and most had βc of around 0.5. Therefore, no sensitivity analysis is required for this application.
Seismic failure of relays and basic event mapping	For the relays modeled in the Seismic PRA, the basic event associated with the seismic failure of the relay must be mapped to an existing internal events target basic event. A key source of modeling uncertainty is associated with the mapping of seismic basic events. Failure modes postulated for the PVNGS internal events model may not fully align with their assigned seismic counterparts.	PRA analyst experience is credited in the selection of the appropriate internal events PRA model component failure modes to reflect postulated seismic PRA model component failure modes. This selection was performed by Westinghouse PRA seismic experts and reviewed by APS PRA engineers. Therefore, no sensitivity analysis is required for this application.

Attachment 15 Disposition of Key Assumptions/Sources of Uncertainty		
Assumption / Uncertainty	**Discussion**	**Disposition**
Seismic PRA uses internal events PRA as a starting point	The PVNGS Seismic PRA assumes that the internal events PRA that is used as a starting point meets the requirements of Capability Category II of the PRA standard.	The internal events PRA that was used to develop the Seismic PRA was evaluated separately for its PRA quality and was determined to meet Capability Category II of the PRA standard. Therefore, no sensitivity analysis is required for this application.
Success criteria for Seismic PRA	If not otherwise specified, the success criteria associated with the internal events PRA logic are considered valid and applicable to accident sequences initiated by a seismic event. However, a standard 24 hour mission time may not be suitable for a seismic-induced accident scenario because of the longer time needed for offsite power recovery.	The base case Seismic PRA uses a 24 hour mission time for the run time of mitigating equipment. A sensitivity case was developed to assess the impact of using a 72 hour mission time for equipment run failures. The change in overall CDF and LERF for this case is 2.73% and 0.69%, respectively. Therefore, no additional sensitivity analysis is required for this application.
Seismic failure correlation	Seismic failures are assumed to be completely correlated. This assumption implies that a single basic event is used to model the seismic failure of components that are identified as pertaining to the same fragility. There's one exception to this where failures in the steam path in the Turbine Building are not considered correlated with failures of the feedwater lines.	Overall, the main feedwater fragility has the same generic value as the steamline fragility (0.21g). Since a variety of components in multiple locations/elevations in the Turbine Building are potentially involved with a variety of boundary conditions and anchorage conditions, the two basic events associated with main feedwater and steamlines fragility events should not realistically be correlated and this treatment was reviewed in the peer review. Therefore, no sensitivity analysis is required for this application.

Attachment 15 Disposition of Key Assumptions/Sources of Uncertainty		
Assumption / Uncertainty	**Discussion**	**Disposition**
Seismically induced Loss of Offsite Power (LOP)	The seismically induced LOP is assumed to bound the fragility of non-seismic class system. This assumption implies that a number of non-seismic class systems are not addressed with a specific seismic failure.	The basis for this assumption is that seismically induced LOP has a generally low seismic capacity. Scenarios where the non-seismic support systems incur seismically induced failures while offsite power is still available are considered realistic only for very low magnitude seismic events. Therefore, the most significant mitigating equipment will still be available. This is considered a conservative assumption. Therefore, no sensitivity analysis is required for this application.
Seismic PRA LOP recovery	In the Seismic PRA, LOOP recovery is not credited for any seismic event above the safe shutdown earthquake (SSE), while it is credited with unchanged probability for a seismic event below the SSE.	It is realistic to consider that offsite power recovery is available for low magnitude seismic events. The selection of the SSE as a threshold between recovery/no-recovery of offsite power is arbitrary and conservative. Therefore, no sensitivity analysis is required for this application.

Attachment 15 Disposition of Key Assumptions/Sources of Uncertainty		
Assumption / Uncertainty	**Discussion**	**Disposition**
Screening of equipment in the Seismic Equipment List (SEL)	Screening of equipment in the Seismic Equipment List (SEL) is based on fragility analysis. Equipment screened by the fragility team as inherently rugged is not modeled in the Seismic PRA for their seismic induced failure. In order to quantitatively capture the impact of screened out equipment, generic fragility parameters for the building that housed the screened out equipment were used. The screened equipment are modeled through a surrogate basic event at a system level.	Using a surrogate event for a number of components that have been screened out introduces a conservative failure mode. The uncertainty introduced by the use of surrogate equipment for the seismic class I system is judged to have a limited impact on the model. Therefore, no sensitivity analysis is required for this application.
Operators tripping the reactor above operating basis earthquake (OBE)	It is assumed that the operators will always trip the reactor in case of a seismic event above OBE even if the option for a controlled shutdown is allowed.	This is considered a conservative assumption. Therefore, no sensitivity analysis is required for this application.
Train 'N' Auxiliary Feedwater (AFN) Pump (AFN) is assumed to remain functional following a design basis earthquake	The AFN Pump is assumed to remain functional with small breaks or leaks at instrument tubing. The fragility analysis associated with the AFN Pump only addresses the pump and not the entire piping network.	A sensitivity case was developed to assess the uncertainty in crediting the AFN pump and not the associated piping network. The capacity of the AFN pump was reduced to the same system level fragility parameters associated with the instrument air system. CDF and LERF increased by 0.08% and 0.03% and indicates little significance of uncertainty in this simplification of the analysis. Therefore, no additional sensitivity analysis is required for this application.

Attachment 15 Disposition of Key Assumptions/Sources of Uncertainty		
Assumption / Uncertainty	**Discussion**	**Disposition**
Main steam line relief valves not explicitly included in the SEL.	Main steam line relief valves are screened out of the analysis on the basis that the steam generator and related piping & valves are considered very rugged. For this reason, the seismic failure of the main steam line relief valves is not modeled.	A sensitivity case is developed to assess the impact of this assumption. A fully dependent seismic failure across all 20 relief valves is modeled. CDF and LERF values did not change when compared to the base case results. This indicates that no significant uncertainty. Therefore, no additional sensitivity analysis is required for this application.
Structural failures of buildings	Structural failures of building are assumed to result in major collapse and failure of all equipment hosted inside the building.	This is a conservative assumption since the fragility parameters provided are addressing the beginning of the structural failure, and a failure of limited areas of the building may result in failure of only a limited number of equipment inside the building. The most significant example of this assumption is the structural failure of the Turbine Building assumed to be also impacting and failing the CST tunnel. Therefore, no sensitivity analysis is required for this application.
The Anticipated Transient Without Scram (ATWS) logic for seismic PRA	The ATWS logic for seismic PRA assumes that the RCS pressure will be above the HPSI shutoff head for only a short period of time.	Moderator Temperature Coefficient (MTC) and ATWS pressure transient are not influenced by the fact that the event is initiated by a seismic event rather than a spurious failure. Therefore, the success criteria developed for the internal events ATWS are considered valid for the seismic PRA. Therefore, no sensitivity analysis is required for this application.

Attachment 15 Disposition of Key Assumptions/Sources of Uncertainty		
Assumption / Uncertainty	**Discussion**	**Disposition**
All flood scenarios on the 40ft and 51ft elevations of the Auxiliary Building assumes that a pipe failure drains the Refueling Water Tank (RWT).	A cutset review showed that the contribution of Fire Protection (FP) initiators is very low and that the Internal Flood results are not being skewed by this conservatism.	This is a conservative approach and should not have a significant impact on the baseline Internal Flood model. Therefore, no sensitivity analysis is required for this application.
A single internal events PRA model was developed to quantify the plant flood risk for multiple units.	Since there are no significant differences between the units, the Unit 1 System, Structure, or Component (SSC) designators were used. It was therefore assumed that the quantification results are applicable to all units.	It is a realistic assumption that the Unit 1 SSC designators are used, since there are no major differences between the three units in terms of internal flood. Therefore, no sensitivity analysis is required for this application.
All components within a flood area where the flood originates were assumed susceptible and failed as a result of the flood, spray, steam, jet impingement, pipe whip, humidity, condensation and temperature concerns except when component design (e.g., waterproofing) spatial effects, low pressure source potential or other reasonable judgment could be used for limiting the effect.	This is a conservative assumption that simplifies the impacted component list. Uncertainty exists where exactly the flood would occur, the impact due to the geometry of the room and equipment, and the direction of the spray or splash for a given scenario. This assumption raises CDF.	This is a conservative approach that simplifies the impacted component list. Therefore, no sensitivity analysis is required for this application.
Block walls are not credited in the analysis and are treated as typical plant walls.	Unless a treatment is non-conservative, the block walls are analyzed on an individual basis. The amount of water that could flow through the gaps is unknown. This has no impact as there were no scenarios where the failure of block walls would lead to a non-conservative treatment.	This has no impact and is of low consequence. Therefore, no sensitivity analysis is required for this application.

Attachment 15 Disposition of Key Assumptions/Sources of Uncertainty		
Assumption / Uncertainty	**Discussion**	**Disposition**
Breaks in pipes less than or equal to two inches in equivalent diameter were only considered if the break would directly result in a plant trip or result in a flood induced equipment failure that would result in a plant trip or immediate shutdown.	The basis for this assumption is as follows: 1. Provides a practical limit to bound the scope of the analysis to potentially large flow rate and significant consequence events. 2. Pipe sizes of less than or equal to two inch diameter do not accurately reflect plant fluid system flood impacts (i.e. two inch diameter pipes produce significantly smaller flood rates). 3. At low flow rates, typical of pressure boundary failure in pipes less than or equal to two inches, the operator response time is longer and less stressful. Such conditions enhance operator actions significantly to successfully mitigate the breaks in small bore pipes. However, piping less than two inches in diameter is considered on an individual basis when necessary for spray and flooding events. Specifically these events are considered in rooms without drains. Piping less than two inches was also considered for spatially specific spray events, however none were modeled and a detailed discussion of the possible events are documented.	This is a conservative approach. Therefore, no sensitivity analysis is required for this application.
Closed-loop systems and tanks were assumed to instantaneously release the entire system inventory	This is a conservative approach that allows for the consideration of all consequences and does not require time based calculations.	This is a conservative approach. Therefore, no sensitivity analysis is required for this application.

Attachment 15 Disposition of Key Assumptions/Sources of Uncertainty		
Assumption / Uncertainty	**Discussion**	**Disposition**
Control Room staff would be unable to respond effectively to multiple events immediately following the flooding event	Human Error Probability (HEP) and Performance Shaping Factors (PSF) adjustments were made during the early stages of a flooding event to account for the additional stress influencing factors. The CDF is higher with this assumption.	This is a conservative approach. Therefore, no sensitivity analysis is required for this application.
No addition to the Control Room crew is credited early into a flood event when assessing human actions.	Operator actions to isolate the flood source are required shortly after detecting that a Pressure Boundary Failure (PBF) has occurred. Often when responding to flood events operators are responding to multiple alarms.	It is a realistic assumption that there would be no addition to the Control Room crew early into the flood event when assessing human actions. Therefore, no sensitivity analysis is required for this application.
It is assumed that pipes that are larger than 3" were capable of producing major floods unless it was determined that the piping was not capable of producing a major flood.	The assumption is conservative as it includes additional piping that may not be conducive to major flooding. Since, major floods are not a major contributor to the Pressure Boundary Failure frequency, its contribution to risk would be considered minimal.	This is a conservative approach. Therefore, no sensitivity analysis is required for this application.
External tanks were not considered as a flood source unless there is a normally available pathway into the plant whereby the tank contents could empty into a room within the main plant structures.	External tanks that are ruptured would not normally propagate into the plant. There were no tanks identified in this Internal Flood PRA that did not propagate into the plant. It was assumed that the impact of an external tank rupture was bounded by the evaluation performed for internal events. Breach of an external tank was assumed to discharge to the yard area and there would be no flood-induced failures of PRA related components.	There is no significant impact on the model. Therefore, no sensitivity analysis is required for this application.

Attachment 15 Disposition of Key Assumptions/Sources of Uncertainty		
Assumption / Uncertainty	**Discussion**	**Disposition**
Floods are assumed to fail all equipment in the initiating room and then propagate out of the room to surrounding flood areas.	Cases in which equipment is deemed as sufficiently high or flood barriers are not expected to retain water to sufficient flood levels are treated on an individual basis. Additionally, splitting the flood areas would generate an unreasonable number of scenarios with no added insight. The Top cutsets are not impacted, however if very specific isolation actions were taken this assumption could be significant.	It is a realistic assumption and is of low consequence. Therefore, no sensitivity analysis is required for this application.
Floods are assumed to propagate down pipe chases prior than down stairwells in situations where pipe chases are not surrounded by a curb and/or a door must be opened to enter into the stairwell.	Water will flow down the path of least resistance therefore a pipe chase is the preferred path over a stairwell with a door in front.	It is a realistic assumption and is of low consequence. Therefore, no sensitivity analysis is required for this application.
Floods are assumed to propagate through doorways which open out, away from the initiating flood area more readily rather than doorways which open in, towards the initiating flood area.	The hydrostatic load that a door can handle is based on whether the door closes against the frame or away (with relation to the room that the flood initiates). A door that is against the frame can withstand a greater load as opposed to away from the door frame.	It is a realistic assumption and is of low consequence. Therefore, no sensitivity analysis is required for this application.

Attachment 15 Disposition of Key Assumptions/Sources of Uncertainty		
Assumption / Uncertainty	**Discussion**	**Disposition**
Floor drains were assumed to be capable of controlling water levels for spray events.	This assumption is based on the expectation that a spray event will not result in a significant accumulation of standing water. During plant walkdowns it was observed that drain entrances were maintained in proper working condition and free of debris. Drains were not credited for any flood or major flood events. It was assumed that spurious actuation of system relief valves would discharge a limited amount of inventory to a discharge tank. Such events were screened out as potential flood sources.	It is a realistic assumption and is of low consequence. Therefore, no sensitivity analysis is required for this application.
Grouping boundary condition sets for the LERF analysis results in conservative modeling of the containment isolation valves.	Grouping boundary condition sets for the LERF analysis is a conservative approach. The LERF contribution of sequences that have been grouped for the LERF analysis and involve failure of containment isolation valves are considered very low.	This is a conservative approach and is of low consequence. Therefore, no sensitivity analysis is required for this application.
The piping layout for flood sources included in the Internal Flood PRA was shown and estimated to be similar for all three units.	To the extent possible, the similarities were confirmed during the plant walkdowns. Therefore, Units 2 and 3 pipe lengths were assumed to be identical to Unit 1 piping lengths. There are no major differences between the three units.	It is a realistic assumption and is of low consequence. Therefore, no sensitivity analysis is required for this application.

Attachment 15 Disposition of Key Assumptions/Sources of Uncertainty		
Assumption / Uncertainty	**Discussion**	**Disposition**
It is assumed that if a PBF were to occur in the Safety Injection (SI) or Chemical & Volume Control (CH) system piping, that the operator would isolate the flood at one of the two pipe headers connecting the Refueling Water Tank (RWT) to the CH and SI systems.	There are no operator procedures for isolating a flood event, therefore the most conservative and bounding location to isolate a flood of the SI or CH is one of the two pipe headers. By isolating at this point it results in the loss of at least one train of the ECCS. This does cause a trip. Therefore the overall impact on the model is small.	This is a conservative assumption and is of low consequence. Therefore, no sensitivity analysis is required for this application.
It is assumed that spurious actuation of system relief valves would discharge a limited amount of inventory to a discharge tank and such events were screened out as potential flood sources.	Spurious actuation of a system relief valve was not determined to be a credible flood source because the inventory that was released would be retained within the flood area and would not lead to an applicable initiating event. The risk is considered negligible as this is not considered to be a significant source of inventory.	This is of low consequence. Therefore, no sensitivity analysis is required for this application.
Limited or no access to an area where flood initiation occurs was assumed.	There was no credit taken for mitigation when the equipment relied on for mitigation was located in the flood initiation area. Operators cannot get into flooded areas.	This is of low consequence. Therefore, no sensitivity analysis is required for this application.
Only one internal flood initiating event is assumed to occur at a time.	The occurrence of simultaneous multiple independent internal flood events were considered to be very unlikely and were not considered in this evaluation. This is consistent with PRA modeling.	It is a realistic assumption and is of low consequence. Therefore, no sensitivity analysis is required for this application.

Attachment 15 Disposition of Key Assumptions/Sources of Uncertainty		
Assumption / Uncertainty	**Discussion**	**Disposition**
The breach of isolation barrier(s) that may result in a maintenance-induced flood event was assumed to have no impact on altering the propagation paths related to other flooding mechanisms (i.e., pipe failure) for the flood source.	This is a simplifying assumption that has negligible impact on the model. Propagation pathways were made to be conservative for all scenarios. Maintenance induced failures such as sprinkler heads were specifically evaluated as spray events in the flood model where they could lead to a plant trip.	This is a conservative assumption and is of low consequence. Therefore, no sensitivity analysis is required for this application.
The indirect effects of a PBF on the operability of a closed looped system were considered to be immediate.	Closed looped systems were considered to be normally operating and provides cooling to equipment that is relied on to maintain the plant in a power production state. It was therefore assumed that operator actions cannot be performed in a timely manner to preclude a plant trip. Most closed loop systems have a limited system capacity. A PBF would drain the system and in most cases an operator action to isolate the PBF would not be feasible. This assumption is conservative and raises CDF.	This is a conservative assumption and is of low consequence. Therefore, no sensitivity analysis is required for this application.

Attachment 15 Disposition of Key Assumptions/Sources of Uncertainty		
Assumption / Uncertainty	**Discussion**	**Disposition**
The spill rate resulting from a PBF of a potential unlimited flood source that causes a spray event is low enough (i.e., <100 gpm) to have no significant impact on the operation of the affected system.	For a potentially unlimited source, a PBF that resulted in a spray event (<100 gpm) would take an extraordinary amount of time to cause a loss of that system. Additionally, given that for most of the large nearly unlimited sources the makeup capabilities of the system would generally exceed the flow rate generated by a spray event. It was therefore assumed that such systems have sufficient design margin to maintain the operability of the system and a plant trip would not occur. Note that for systems with a low system capacity (i.e. the CH system) this assumption was not valid.	It is a realistic assumption and is of low consequence. Therefore, no sensitivity analysis is required for this application.

Attachment 15 Disposition of Key Assumptions/Sources of Uncertainty		
Assumption / Uncertainty	**Discussion**	**Disposition**
The flow rate from a PBF is assumed static at the maximum possible rate and the scenario is only ended when the source was exhausted or isolated.	The spill rate resulting from a PBF of piping is considered to be the highest flow rate possible from the system or piping, and for tank is was assumed to be constant at an assumed flow rate, and for systems requiring pumps is considered the realistic pump flow rate, for the particular break in the originating flood area until the flood source was isolated or its water supply was limited or exhausted. The accumulation of flood water in a flood area was considered halted when the flood source was terminated, or when outflow from the flood area matches or exceeds the inflow of flood water to the flood area. A constant maximum spill rate minimizes the time to reach the critical heights for SSCs that are susceptible to flooding. Spill rates were assumed to fall within the following categories: • Spray events: 100 gpm • Flood events: greater than 100 gpm but less than 2000 gpm (or maximum capacity of the system, whichever is lower) • Major flood events: greater than 2000 gpm (or the maximum capacity of the system, whichever is lower)	This is a conservative assumption and is of low consequence. Therefore, no sensitivity analysis is required for this application.

Attachment 15 Disposition of Key Assumptions/Sources of Uncertainty		
Assumption / Uncertainty	**Discussion**	**Disposition**
The treatment of main steamline break and main feedwater line break internal events analysis was assumed to address the impact of these events in assessing whether main feedwater can be recovered following a reactor trip.	Recovery of feedwater is important for secondary side heat removal. The internal events analysis was believed to provide sufficient analysis to be used in the internal flooding model.	This is of low consequence since the equipment/ components failed in the internal events model is bounding. Feedwater line breaks impact alternate feedwater, steam to auxiliary feedwater pump A, turbine bypass valves and main feedwater. Steamline breaks impact auxiliary feedwater to the faulted steam generator (SG), steam supply to auxiliary feedwater pump A, main feedwater and turbine bypass valves. Additionally, the atmospheric dump valves for steam line break and feedwater line break associated with the faulted SG would be impacted, but are not credited for the faulted SG. Therefore, no sensitivity analysis is required for this application.
It was assumed that minimal or no dependency existed between flood-specific and large early release specific Human Failure Events (HFEs).	The flood HRA dependency analysis did not include large early release specific HFEs. HFEs specific to large early releases (i.e., post-core damage operator actions) are generally performed several hours after the initiating event occurs. No dependency between early and late operator actions. There is no impact on the model.	This is of low consequence. Therefore, no sensitivity analysis is required for this application.

Attachment 15 Disposition of Key Assumptions/Sources of Uncertainty		
Assumption / Uncertainty	**Discussion**	**Disposition**
The fire areas defined by the Fire Hazards Analysis (which is contained in the UFSAR, Sections 9B.2.1 through 9B.2.22) will substantially contain the adverse effects of fires originating from any currently installed fixed ignition source or reasonably expected transient ignition source. Fire zone boundaries are similarly assumed adequate or combined.	Fire areas are required by regulation to be "sufficiently bounded to withstand the hazards associated with the area" as defined in Generic Letter 86-10 (Enclosure 1 Section 4). Fire zone boundaries are similarly assumed adequate; however, because fire zones have a lesser pedigree than fire areas, their boundaries are verified adequately in this notebook by a FHA review and plant walkdowns. Fire zone boundaries that appear unable to withstand the fire hazards within the zone are combined. The fire PRA utilizes fire compartments which generally align with fire zones, but may be a combination of several fire zones.	It is a realistic assumption and is of low consequence. Therefore, no sensitivity analysis is required for this application.

Attachment 15 Disposition of Key Assumptions/Sources of Uncertainty		
Assumption / Uncertainty	**Discussion**	**Disposition**
Systems and equipment not credited in the fire-induced risk model (e.g., systems for which cable routing will not be performed) are assumed to be failed in the fire-induced risk model. These systems and equipment are failed in the worst possible failure mode, including spurious operation It is assumed that any fire will minimally result in a loss of Main Feedwater and subsequent reactor trip. This is a simplifying and conservative assumption and is typical of Fire PRAs. However, it may not be true for all fires.	The assumption that any fire fails all equipment lacking cable routing information has the potential to affect the assessed fire risk. The assumption that any fire will minimally result in a loss of Main Feedwater and subsequent reactor trip likely adds conservatism to the Fire PRA results. However, the degree of conservatism is relatively small compared with other modeling uncertainties, since Main Feedwater will trip for most transient events. The impact of these assumptions was evaluated by a sensitivity analysis case which concluded that the risk reduction due to crediting all components assumed always failed was small.	It is a realistic assumption and is of low consequence. Therefore, no sensitivity analysis is required for this application.
It is assumed that the Reactor Protection System (RPS) design is sufficiently fail-safe and redundant to preclude fire-induce failure to scram, or random failure to scram during a fire event, as a risk significant contributor.	RPS design is sufficiently fail-safe and redundant to preclude fire-induce failure to scram: Consistent with the guidance in NUREG/CR-6850 Section 2.5.1, type of sequences that can be generally eliminated from consideration in Fire PRA include sequences for which a low frequency argument can be made, and uses ATWS as a specific example, because fire-induced failures will almost certainly remove power from the control rods, resulting a trip, rather than cause a "failure to scram" condition.	It is a realistic assumption and is of low consequence. The low frequency of a fire occurring coincident with the low probability of independent failure to scram results in a negligible contribution to fire risk. Therefore, no sensitivity analysis is required for this application.

Attachment 15 Disposition of Key Assumptions/Sources of Uncertainty		
Assumption / Uncertainty	**Discussion**	**Disposition**
Properly sized and coordinated electrical protective devices are assumed to function within their design tripping characteristics, thus preventing initiation of secondary fires through circuit faults created by the initiating fire.	Electrical protection design calculations provide the documentation of the electrical coordination between overcurrent protective devices. An evaluation was performed to assess the Fire PRA power supply coordination requirements in accordance with NUREG/CR 6850, and provides a link to relevant PVNGS electrical coordination calculations that demonstrate selective tripping capability for each credited Fire PRA power supply. When selective tripping cannot be demonstrated, the current fire PRA model credits cable lengths to limit fault current that fails a power supply.	This is a conservative approach because credited cable lengths have a margin of 20% or more applied to the credited cable lengths to ensure that applicable raceways were identified. Additionally, the fire-induced impact is modeled within the credited cable length. Therefore, no sensitivity analysis is required for this application.

Attachment 15 Disposition of Key Assumptions/Sources of Uncertainty		
Assumption / Uncertainty	**Discussion**	**Disposition**
It is assumed that Fire PRA targets were assigned the appropriate radiant heat flux damage and temperature damage criteria depending on the cable insulation information available. In other words, all raceways containing cables with thermoplastic or unknown cable insulation were assigned a radiant heat flux damage threshold of 6kW/m2 and 205 °C. All raceways containing cables with thermoset insulation only may be assigned a radiant heat flux damage threshold of 11 kW/m2 and 330 °C but have been initially assigned the thermoplastic damage thresholds.	All raceways containing cables were assigned a radiant heat flux damage threshold of 6kW/m2 and 205 °C. Raceways containing cables with thermoset insulation only may be assigned a radiant heat flux damage threshold of 11 kW/m2 and 330 °C but have been initially assigned the thermoplastic damage thresholds. A brief review of the dominant scenarios identified the existence of thermoplastic insulated cables within the target raceways.	It is a realistic assumption and is of low consequence. It was concluded that minimal benefit could be obtained by further analysis to identify and model raceways containing only thermoset insulation. Therefore, no sensitivity analysis is required for this application.

References:

1. WCAP-15749, *Guidance for the Implementation of the CEOG Model for Failure of RCP Seals Given Loss of Seal Cooling*, Revision 0, December 2008
2. NUREG/CR-6928, *Industry-Average Performance for Components and Initiating Events at U.S. Commercial Nuclear Power Plants*, January 2007
3. NUREG-1829, *Estimating Loss-of-Coolant Accident (LOCA) Frequencies through the Elicitation Process*, Draft
4. 13-NS-C004, *At-Power PRA Study for Loss Of Offsite Power Statistical Evaluation*, Revision 7
5. NUREG/CR-INEEL/EXT 04-0236, *Evaluation of Loss of Offsite Power Events at Nuclear Power Plants: 1986-2003*, October 2004

ATTACHMENT 16

PRA Responses to NRC Technical Concerns from Pre-Submittal Conference Call of December 29, 2016

The following are responses to NRC technical concerns brought up during a pre-submittal conference call held on December 29, 2016.

NRC Technical Concern 1

The license amendment request (LAR) for Palo Verde Nuclear Generating Station (PVNGS), Unit 3, dated December 21, 2016 (license amendment 199 approved by NRC on December 23, 2016), states that the plant-specific risk assessment of the proposed change to the Technical Specification (TS) completion time (CT) follows the guidance in Regulatory Guide (RG) 1.174, Revision 2, and RG 1.177, Revision 1. Both of these regulatory guides endorse the guidance in RG 1.200, Revision 2, as an acceptable approach for determining whether the technical adequacy of the PRA is sufficient for use in regulatory decision-making (e.g., changes to a plant's licensing basis).

Section 4.2, "Licensee Submittal Documentation," of RG 1.200 provides detailed guidance on what information should be included in a risk-informed submittal to demonstrate the technical adequacy of the PRA, including a discussion of the resolution of peer review (or self-assessment, for peer reviews performed using the criteria in NEI 00-02) findings and observations that are applicable to the submittal. Also stated in RG 1.200 is that the objective of the peer review is to demonstrate that the requirements in an NRC-endorsed standard (e.g., ASME/ANS RA-Sa-2009) have been met.

Attachment 4 of Enclosure 2 to the LAR lists those "Findings" from the peer review of the internal events PRA model (IEPRA) conducted in accordance with NEI 00-02. It is unclear whether these findings were dispositioned in a manner that demonstrates that the requirements in ASME/ANS RA-Sa-2009 (the "ASME PRA Standard") have been met. Therefore, address the following items related to these findings:

(a) Finding HR-01 cites concern that operation input into the human reliability analysis (HRA) may be marginal. The corresponding disposition explains that this finding was addressed by updating the HRA documentation, but does not explain whether the degree of operational input and review meets PRA standard ASME/ANS RA-Sa-2009, as qualified by RG 1.200, Revision 2. Supporting requirement (SR) HR-E3 of ASME/ANS RA-Sa-2009 requires "talk-throughs" of the procedures with plant operation and training personnel to ensure a consistent interpretation. Explain whether "talk-throughs" (i.e., detailed review) of the procedures with plant operation and training personnel were performed. Otherwise, justify why not performing "talk-throughs" is judged to have no significant impact on the quantification results used in this application.

(b) Finding HR-03 cites concern about not modelling "miscalibration and common cause miscalibration of critical sensors." The corresponding disposition states that common cause modelling was updated in the PRA to "match the NRC common cause database treatment." It is not clear from this statement how this finding

ATTACHMENT 16

PRA Responses to NRC Technical Concerns from Pre-Submittal Conference Call of December 29, 2016

was resolved in the PRA. Clarify how miscalibration errors were resolved in the IEPRA.

(c) Finding AS-03 asks why the plant response to small loss of coolant accidents (LOCAs) and induced small LOCAs were modelled differently. The corresponding disposition states that the finding has been resolved and closed by an update of the PRA model and documentation. Describe the update of the IEPRA model to resolve this finding, and, if applicable, explain and justify why the plant responses are different for these LOCAs.

APS Response to Technical Concern 1:

(a) "Talk-throughs" (i.e., detailed review) of the HRAs were conducted with two operating crews in 2012 in accordance with the ASME PRA Standard RA-Sa 2009.

(b) Instruments were screened for common cause as described in Engineering Study 13-NS-B064, "Common Cause Failure Analysis for the Level 1 PRA." Common cause failure data for the screening was obtained from either published NUREG documents or the NRC common cause database. The instruments that screened in had common cause calculated for the respective instrument channels. Common cause miscalibration of instrument sensors is addressed as a pre-initiator Human Response Analysis (HRA) as documented in Engineering Study 13-NS-B062, "At-Power PRA Study for Human Reliability Analysis." In addition to the common cause analysis, industry data in NUREG/CR 3289, "Common Cause Fault Rate for Instrumentation," plant history, and instrument calibration procedures were reviewed for determining which instruments to model with a miscalibration HRA. These instruments were then assigned a pre-initiator HRA basic event in the model fault tree that would fail all associated instrument channels.

(c) No change was made to the internal events model. The model documentation needed enhancement. The explanation for the difference in modeling is provided below.

For small break LOCA hole sizes greater than two inches with no secondary cooling, sufficient containment pressure could build up that containment cooling is required. Engineering Study 13-NS-B060, "At-Power PRA System Study for Initiators," describes the small break size for PVNGS. Engineering Study 13-NS-B065, "At-Power PRA MAAP 4.0.4 Analysis," describes the MAAP runs that demonstrated the need for containment cooling. The small break LOCA event tree conservatively treats all break sizes as being critical and asks for containment cooling when High Pressure Safety Injection (HPSI) and High Pressure Safety Recirculation (HPSR) are successful, but Reactor Coolant System (RCS) cool down and depressurization are unsuccessful, therefore adding sufficient energy to reach containment failure before core melt. Low pressure recirculation is needed for long term cooling with no HPSI for critical small break LOCAs and is supported by a specific MAAP run documented in engineering study 13-NS-B065.

ATTACHMENT 16

PRA Responses to NRC Technical Concerns from Pre-Submittal Conference Call of December 29, 2016

Induced small LOCAs are associated with challenges to the Primary Relief Valves (PSVs). These are addressed under Type 2 and 3 Transient event trees. Type 2 Transients are initiators which result in a reactor trip prior to turbine trip with Alternate Feedwater (condensate pumps) available. There is no challenge to the PSVs by the initial transient. If attempts to cool the steam generators (SGs) with auxiliary feedwater (AF) fail and Alternate Feedwater must be aligned, the RCS would reach saturation conditions and begin blowing down water through the PSVs. Type 3 Transients are initiators which result in a turbine trip preceding reactor trip. Transients of this nature could challenge the PSVs. For Type 2 and Type 3 event trees, secondary cooling (auxiliary feedwater or alternate feedwater) must be successful before RCS integrity is asked. So a HPSI and HPSR success will have cooled down RCS and has no containment failure in the MAAP runs documented in 13-NS-B065, therefore the containment cooling question is not required. Type 2 and 3 events without secondary cooling lead to core melt prior to containment failure.

NRC Technical Concern 2

The PVNGS LAR, dated December 21, 2016, states that the plant-specific risk assessment of the proposed change to the TS CT follows the guidance in RG 1.174, Revision 2, and RG 1.177, Revision 1. Both of these regulatory guides endorse the guidance in RG 1.200, Revision 2, as an acceptable approach for determining whether the technical adequacy of the PRA is sufficient for use in regulatory decision-making (e.g., changes to a plant's licensing basis).

Section 4.2, "Licensee Submittal Documentation," of RG 1.200 provides detailed guidance on what information should be included in a risk-informed submittal to demonstrate the technical adequacy of the PRA, including a discussion of the resolution of peer review (or self-assessment, for peer reviews performed using the criteria in NEI 00-02) findings and observations that are applicable to the submittal. Also stated in RG 1.200 is that the objective of the peer review is to demonstrate that the requirements in an NRC-endorsed standard (e.g., ASME/ANS RA-Sa-2009) have been met.

Attachment 7 of Enclosure 2 to the LAR lists facts and observations (F&Os) from the peer review of the seismic PRA model. The disposition to seismic PRA F&O SPR-B10 indicates that the finding has been resolved, but does not discuss the resolution. Discuss how this F&O was resolved.

APS Response to Technical Concern 2:

Per supporting requirement SPR-B10 of the ASME/ANS PRA Standard a seismically induced small-small LOCA (SSLOCA) event is postulated concurrent with SI-LOOP, SI-TYPE2, SI-TYPE3 sequences. The SI-LOOP, SI-TYPE2, and SI-TYPE3 event trees were modified by adding a "small-small LOCA" event after the "PSV reseat" event. Due to current lack of available industry guidance, the SSLOCA fragility parameters are assumed to be equivalent to the SLOCA fragility parameters. An SSLOCA can be mitigated by one of the three

ATTACHMENT 16

PRA Responses to NRC Technical Concerns from Pre-Submittal Conference Call of December 29, 2016

charging pumps. HPSI and HPSR may potentially also be used to mitigate SSLOCA accident sequences, however, these mitigations were conservatively not modeled. Therefore, the finding associated with SPR-B10 has been resolved.

NRC Technical Concern 3

The PVNGS LAR, dated December 21, 2016, states that the plant-specific risk assessment of the proposed change to the TS CT follows the guidance in RG 1.174, Revision 2, and RG 1.177, Revision 1. Both of these regulatory guides endorse the guidance in RG 1.200, Revision 2, as an acceptable approach for determining whether the technical adequacy of the PRA is sufficient for use in regulatory decision-making (e.g., changes to a plant's licensing basis).

Section 4.2, "Licensee Submittal Documentation," of RG 1.200 provides detailed guidance on what information should be included in a risk-informed submittal to demonstrate the technical adequacy of the PRA, including a discussion of the resolution of peer review (or self-assessment, for peer reviews performed using the criteria in NEI 00-02) findings and observations that are applicable to the submittal. Also stated in RG 1.200 is that the objective of the peer review is to demonstrate that the requirements in an NRC-endorsed standard (e.g., ASME/ANS RA-Sa-2009) have been met.

The LAR discusses the peer review of the seismic PRA and fire PRA. The staff also reviewed information provided to the NRC by the licensee in its Risk-Informed Completion Time (RICT) application dated July 31, 2015 (Agencywide Documents Access and Management System (ADAMS) Accession No. ML15218A300). It is unclear to the staff whether these peer reviews were full-scope reviews and what guidance documents were used to perform them. For example, the RICT application states the following, which suggests the 2012 peer review of the fire PRA was not a full-scope review:

> "A peer review of the PVNGS internal fire PRA was conducted in October 2012 … Subsequently, a focused-scope peer review of the internal fire PRA was conducted in December 2014 (Reference 11 of this Attachment) to address ASME PRA Standard SRs not-met to Capability Category II requirements and those SRs not-reviewed in the prior October 2012 internal fire PRA peer review."

Confirm that peer reviews performed for the seismic PRA and fire PRA were full-scope reviews meeting industry guidance for a peer review and that they were reviewed against capability category II (in accordance with RG 1.200). In addition, discuss which organization performed the review, and list the guidance documents followed for each review, including the guidance used for the peer review process (e.g., NEI 07-12, "Fire Probabilistic Risk Assessment (FPRA) Peer Review Process Guidelines"). As applicable, provide the F&Os, including their dispositions, from the 2014 focused-scope peer review of the fire PRA determined not met to Capability Category II.

ATTACHMENT 16

PRA Responses to NRC Technical Concerns from Pre-Submittal Conference Call of December 29, 2016

APS Response to Technical Concern 3:

The seismic PRA and fire PRA peer reviews were full-scope reviews meeting industry guidance for a peer review and they were reviewed against capability category II in accordance with RG 1.200, Revision 2. A focused-scope peer review of the fire PRA was conducted after the initial full-scope fire peer review with the purpose of re-reviewing the ASME PRA Standard supporting requirements not determined met to capability category II in the full scope peer review. The focused-scope peer review of the fire PRA was not limited to review of the F&Os generated in the full-scope peer review.

The full-scope seismic PRA peer review was conducted by a team consisting of the following members:

- Srinivasa Visweswaran (Westinghouse Electric Company, LLC) (team lead)
- Steven Eide (Scientech/Curtiss Wright)
- Lawrence Lee (ERIN Engineering and Research, Inc.)
- Richard Lee (Los Alamos National Laboratory)
- Nishikant Vaidya (Paul C. Rizzo Associates, Inc.)

The full-scope seismic PRA peer review was conducted in accordance with NEI 12-13, "External Hazards PRA Peer Review Process Guidelines," August 2012. The following references were cited as used in the peer review process:

- ASME/ANS RA-Sa-2009, "Addenda to ASME/ANS RA-S-2008 Standard for Level 1/Large Early Release Frequency Probabilistic Risk Assessment for Nuclear Power Plant Applications", ASME and the American Nuclear Society, February 2009.
- Regulatory Guide 1.200, Revision 2, "An Approach for Determining the Technical Adequacy of Probabilistic Risk Assessment Results for Risk-Informed Activities," USNRC, March 2009.
- NEI 12-13, "External Hazards PRA Peer Review Process Guidelines," August 2012.
- NEI 05-04, Revision 2, "Process for Performing Follow-On PRA Peer Reviews Using the ASME PRA Standard (Internal Events)," Nuclear Energy Institute, November 2008.

The full-scope fire PRA peer review was conducted by a team consisting of the following members:

- David Finnicum (Westinghouse Electric Company, LLC) (team lead)
- Keith Vincent (TVA)
- Paul Amico (Hughes Associates)
- Benjamin Grace (EPM)
- Fred Mowrer (Tri-En)
- Jodine Jansen Vehec (Reliability and Safety Consulting Engineers, Inc.)
- Greg Rozga (Maracor)
- Clint Pierce (ERIN Engineering)

ATTACHMENT 16

PRA Responses to NRC Technical Concerns from Pre-Submittal Conference Call of December 29, 2016

The full-scope fire PRA peer review was conducted in accordance with NEI 07-12, "Fire Probabilistic Risk Assessment (FPRA) Peer Review Process Guidelines." The following references were cited as used in the peer review process:

- "Large Early Release Frequency Probabilistic Risk Assessment for Nuclear Power Plan Applications," ASME and the American Nuclear Society, December 2008.
- NEI 07-12, "Fire Probabilistic Risk Assessment (FPRA) Peer Review Process Guidelines," Nuclear Energy Institute, November 2008.
- NFPA 805, "Performance-Based Standard for Fire Protection for Light Water Reactor Electric Generating Plants, 2001 Edition," National Fire Protection Association, 2001.
- ANSI/ANS 58.23-2007, "Fire PRA Methodology," American Nuclear Society, November 2007.
- NUREG/CR-6850, "EPRI/NRC-RES Fire PRA Methodology for Nuclear Power
- Facilities," Electric Power Research Institute and the U.S. Nuclear Regulatory Commission, September 2005.
- Regulatory Guide 1.205, "Risk-Informed, Performance-Based Fire Protection for Existing Light-Water Nuclear Power Plants," U.S. NRC, May 2006.
- NEI 05-04, Revision 1 "Process for Performing Follow-On PRA Peer Reviews Using the ASME PRA Standard (Internal Events)," Nuclear Energy Institute, November 2007.
- The EPRI HRA Calculator 3.0, 2005.
- Regulatory Guide 1.200, Revision 2, "An Approach for Determining the Technical Adequacy of Probabilistic Risk Assessment Results for Risk-Informed Activities," USNRC, 2009.
- NUREG-1921, "EPRI/NRC-RES Fire Human Reliability Guidelines", Electric Power Research Institute and the U.S. Nuclear Regulatory Commission, November 2009
- NEI 00-02, Revision 3A, "Probabilistic Risk Assessment (PRA) Peer Review Process Guidance," March 2000.
- 10 CFR 50.48, Fire Protection (45 FR 76602).
- GL 88-20, "Individual Plant Examination for Severe Accident Vulnerabilities – 10 CFR 50.54(f)," USNRC, November 1988.

The focused-scope fire PRA peer review was conducted by a team consisting of the following members:

- Andy Ratchford (Ratchford Diversified Services) (team lead)
- Susan LeStrange (Hughes Associates)
- Justin Hiller (Ameren - Callaway Plant)
- Bob Lichtenstein (Westinghouse)

The focused-scope fire PRA peer review was conducted in accordance with NEI 07-12, "Fire Probabilistic Risk Assessment (FPRA) Peer Review Process Guidelines" sections 3.5 and 4.4. The following references were cited as used in the peer review process:

- ASME/ANS RA-Sa-2009, Addenda A to ASME/ANS RA-S-2008, "Standard for Level 1/Large Early Release Frequency Probabilistic Risk Assessment for Nuclear Power Plant Applications," ASME and the American Nuclear Society, December 2008.

ATTACHMENT 16

PRA Responses to NRC Technical Concerns from Pre-Submittal Conference Call of December 29, 2016

- NEI 07-12, Revision 1, "Fire Probabilistic Risk Assessment (FPRA) Peer Review process Guidelines," Nuclear Energy Institute, July 2010.
- ANSI/ANS 58.23-2007, "Fire PRA Methodology," American Nuclear Society, November 2007.
- NUREG/CR-6850, "EPRI/NRC-RES Fire PRA Methodology for Nuclear Power Facilities," Electric Power Research Institute and the U.S. Nuclear Regulatory Commission, September 2005.
- NEI 05-04, Revision 2 "Process for Performing Follow-On PRA Peer Reviews Using the ASME PRA Standard (Internal Events)," Nuclear Energy Institute, November 2008.
- Regulatory Guide 1.200, Revision 2, "An Approach for Determining the Technical Adequacy of Probabilistic Risk Assessment Results for Risk-Informed Activities," USNRC, 2009.
- 10 CFR 50.69, Risk-Informed Categorization and Treatment of Structures, Systems and Components for Nuclear Power Reactors

The following table provides a listing of all F&Os from the focused-scope fire PRA peer review and their indicated dispositions.

Focused-Scope Fire PRA Peer Review Findings and Resolutions		
F&O	**Issue**	**Resolution**
CF-A1-01 (finding)	A review of the FSS database, design drawings, and circuit failure supporting documentation identified several instances where an inappropriate circuit failure probability was assigned in the Fire PRA. • Circuit failure review worksheets, highlighted elementary diagrams, and the FSS database for valve CHN-LV-110, associated with BE 1CHELV110P-AVFC "Failure of AOV Valve LV110P fails to Isolate following ISLOCA" were reviewed. The review determined that cables 1ECH58NC1XA, 1ECH58NC1XB, and 1ECH58NC1XC were assigned an aggregate CF probability of 0.56, based on Table 4-1 of NUREG/CR-7150 for SOV, single break, ungrounded dc, thermo-set cable. Upon review of the circuit, the cables of concern appear to be associated with instrumentation signals related to the control of the valve (4-20 mA signal cable as opposed to 125 vdc control cable). As discussed in Section 3 and 7.3 of NUREG/CR-7150, conditional spurious probability estimates should not be applied to instrumentation circuits. • Circuit failure review worksheets, highlighted elementary diagrams, and the FSS database for valve Component Functional State 1JHPBUV2:Closed:Closed, associated with BE 1HPBP36V02-MV-RC "Failure of MOV Globe VLV HPB-UV002 to Remain Closed for CTMNT Isolation" were reviewed. The component is a normally closed, desired closed MOV. The eeview determined that the power cables for this valve were identified as required for the valve functional state, although the power cables (i.e., 1EHP02BC1KA, and 1EHP02BC1KC) are not required for the valve to remain closed. In addition, these cables were assigned a spurious operation	The Fire Scenario Selection (FSS) database, circuit failure review worksheets and Cable Selection and Circuit Analysis [CS/CF] study have been revised to correct the inappropriate application of the circuit failure probability. ▪ The FSS database table tbl_raw_CF_CableInfo_CFLA for valve CHN-LV-110P, and its associated instrument cables (1ECH58NC1XA, 1ECH58NC1XB, and 1ECH58NC1XC) was revised to exclude these cables from being assigned a conditional spurious probability. ▪ The FSS database table tbl_raw_CF_CableInfo_CFLA and associated circuit failure review worksheets for valve HPB-UV-002 was revised for power cables 1EHP02BC1KA and 1EHP02BC1KC. The circuit failure review worksheets were revised to indicate that power cables 1EHP02BC1KA and 1EHP02BC1KC are not required for the valve to remain closed. tbl_raw_CF_CableInfo_CFLA was revised to exclude power cables 1EHP02BC1KA and 1EHP02BC1KC from being assigned a conditional spurious probability. A review of the specific circuit types (i.e., instrumentation circuit failure probabilities incorrectly assigned and MOV power cable identification and assignment of circuit failure probabilities) for similar component types was performed. The following additional corrections were incorporated during this review to address the Finding details:

Focused-Scope Fire PRA Peer Review Findings and Resolutions		
F&O	**Issue**	**Resolution**
	probability from Table 4-3 of NUREG/CR-7150, which is intended for grounded MOV single break control circuits (not power cables). Other instances were identified during the review where MOV power cables for passive MOVs that were analyzed only for spurious operation had their power cables identified as "required" and assigned spurious operation probability. Identification of incorrect spurious operation probability for specific types can underestimate fire risk (e.g., AOV Valve LV110P example) or overestimate fire risk (e.g., MOV Globe VLV HPB-UV002 example). Recommendation: Review the specific circuit types (i.e., instrumentation circuit failure probabilities incorrectly assigned and MOV power cable identification and assignment of circuit failure probabilities) for these components and other similar component types. Update the methodology and results in the Fire PRA Notebook Fire PRA Cable Selection and Circuit Analysis and any other necessary supporting documents and databases.	▪ Revised tbl_raw_CF_CableInfo_CFLA in the FSS database for valve CHN-LV-110Q, and its associated instrument cables (1ECH58NC1XA, 1ECH58NC1XB, and 1ECH58NC1XC) to exclude these cables from being assigned a conditional spurious probability. ▪ The FSS database tbl_raw_CF_CableInfo_CFLA and associated circuit failure review worksheets for valve HPA-UV-001 was revised for power cables 1EHP02AC1KA and 1EHP02AC1KC. The circuit failure review worksheets were revised to indicate that power cables 1EHP02AC1KA and 1EHP02AC1KC are not required for the valve to remain closed. tbl_raw_CF_CableInfo_CFLA was revised to remove power cables 1EHP02AC1KA and 1EHP02AC1KC from being assigned a conditional spurious probability. The Cable Selection and Circuit Analysis [CS/CF] study section 2.2 was revised to provide additional guidance when performing cable failure mode likelihood calculations for instrument and power cables.
CF-B1-01 (suggestion)	It is recommended that the Fire PRA Notebook Fire PRA Cable Selection and Circuit Analysis be updated to ensure consistent discussion and treatment of failure modes. Specific items that should be addressed in documentation updates include: • Consistent treatment of 3-phase ac hot shorts throughout the Fire PRA (there currently exists old treatment from NUREG/CR-6850, mixed with the "incredible" treatment from NUREG/CR-7150 (See sections 2.1.2, 2.1.4(7, 8, and 9). This discussion should include the relevance of "high consequence equipment" which is discussed in Section 5.6 of the	The referenced documents were reviewed and updated to ensure consistent description of methodology and results in the cable selection and circuit failure mode likelihood tasks. Resolution of this Suggesting was documentation only. Specifically, the following updates were performed to ensure consistent implementation and description: ▪ Treatment of 3-phase ac hot shorts: The Cable Selection and Circuit Analysis [CS/CF]

Focused-Scope Fire PRA Peer Review Findings and Resolutions		
F&O	**Issue**	**Resolution**
	ES Notebook. • Ground fault equivalent hot shorts were deemed to be bounded by existing treatment in Section 2.1.4 (10) of the Fire PRA Cable Selection and Circuit Analysis Notebook, but it appears that they were considered by selection of the "aggregate" circuit failure values for ungrounded dc circuits. • It is suggested that "NUREG/CR-6850 Supplement 1 (Reference 19) based on FAQ 08-0051 (Reference 20)" be characterized in Section 2.2.3 of the Fire PRA Cable Selection and Circuit Analysis Notebook as being superseded by NUREG/CR-7150 or removed from the notebook to avoid potentially future conflicting guidance. • Since the circuit failure probability determination is manipulated in the FSS database as described in section 4.3.9 of the FSS notebook, it is recommend that a descriptive cross reference be provided in the circuit failure notebook (e.g., in Section 2.2.2) to the FSS notebook, since the values determined by the cable analyst may not be the final values used in the Fire PRA (e.g., the Exclusive OR treatment). Specific technical issues were identified in F&O CF-A1-01. This F&O is intended to address other documentation items that were identified during the review, but were not deemed to be significant enough to warrant a Finding F&O or a "Not Met" SR characterization. Recommendation: Review and update the referenced documents to ensure consistent description of methodology and results in the cable selection and circuit failure mode likelihood tasks. Specifically, ensure that the treatment of 3-phase ac hot shorts is consistently implemented and described, clarity on the treatment of ground fault equivalent hot shorts, that NUREG/CR-7150	study Section 2.2.1 was revise to clarify the application of failure probabilities to 3-phase hot short schemes. Section 2.1.2 retains the statements that the schemes are required to be addressed (although the probability may be incredible) ▪ Treatment of ground fault equivalent hot shorts: The Cable Selection and Circuit Analysis [CS/CF] study Section 2.1.4 (10) was revised to include the following statement: "Detailed circuit analysis may prove this fault to be incredible for certain fire scenarios; however, if detailed circuit analysis is not performed, cable selection must consider this to be a plausible fault." ▪ Treatment of hot short duration: The Cable Selection and Circuit Analysis [CS/CF] study Section 2.2.3 was revised to only include NUREG/CR-7150 Vol. 2 as the definitive reference for hot short duration. ▪ Treatment of circuit failure Exclusive OR quantification: The Cable Selection and Circuit Analysis [CS/CF] study Section 2.2.2 was revised to ensure that the Exclusive OR treatment of the circuit failure probabilities is appropriately cross-referenced to section 4.3.9 of the Fire PRA – Fire Scenario Selection and Seismic-Fire Interactions [FSS/SF] study.

Focused-Scope Fire PRA Peer Review Findings and Resolutions		
F&O	**Issue**	**Resolution**
	Vol. 2 is referred to as the definitive reference for hot short duration, and the Exclusive OR treatment circuit failure probabilities is appropriately cross-referenced in the CS/CF notebook.	
FQ-E1-01 (finding)	Back-reference SR QU-D5 states: REVIEW a sampling of nonsignificant accident cutsets or sequences to determine they are reasonable and have physical meaning. There is no documentation that a review of nonsignificant cutsets or sequences was performed. Recommendation: Perform and document a review of a sampling of nonsignificant accident cutsets or sequences to determine they are reasonable and have physical meaning.	Reviews of the dominant scenarios (top 95% contribution to CDF and LERF) were performed by reviewing a significant portion of the top cutsets, as well as a reasonable sampling of the middle and bottom [non-significant] cutsets. In addition, a reasonable sampling of the non-dominant scenarios was also performed to review the top, middle, and bottom [non-significant] cutsets. Documentation of the cutset reviews conducted was added to the Quantification study. The reviews are described along with the results and conclusions
FQ-E1-02 (finding)	Back-reference SR QU-D7 states: REVIEW the importance of components and basic events to determine that they make logical sense. There is no documentation that shows that a review of the importance of components and basic events to determine that they make logical sense was performed. Recommendation: Perform and document a review of the importance of components and basic events to determine that they make logical sense.	Fussell-Vesely and Risk Achievement Worth were calculated for the Basic Events and Components using the combined cutset file and EPRI Risk & Reliability SysImp software. Values were computed for both CDF and LERF. They were reviewed to see if they made logical sense. The review included the top 500 importances and samples of the middle and bottom importances The review and the top 100 basic events based on FV and components based on RAW were documented in the Quantification study.
FQ-E1-03 (suggestion)	Back-reference SR QU-D3 states: REVIEW results to determine that the flag event settings, mutually exclusive event rules, and recovery rules yield logical results. These files were changed in response to an F&O written by a peer review team. There is no documentation in the notebook which indicates this requirement was performed. Since the file were changed the file must have been reviewed. Documentation showing that this review was performed should be added to the notebook. Recommendation: A possible resolution is to add tables for the mutually	The following model files are reviewed by two methods; direct review during development and documentation, and indirect review during final cutset review. Although the final cutset review effectively reviews the files, documentation of their development was improved and better commented within the files. MasterFlag.txt RECRULE_FIRE_[date].recv MUTEX logic (PV_FIRE_[date].caf)

Focused-Scope Fire PRA Peer Review Findings and Resolutions		
F&O	**Issue**	**Resolution**
	exclusive file and the recovery rules. This table would have two purposes: 1. To document the basis for each entry into the above files, and 2. As a reference for new engineers to the PRA group to understand the use of these two files. This would ensure that any "tribal knowledge" associated with the two files is passed on to the newer engineers.	The Internal Events model MUTEX logic was reviewed for applicability during the Fire model development. The review table is provided in the Quantification Study. Cross references were added to denote the origin of these logic fault trees from the Internal Events CAFTA model and validation calculation studies, The MasterFlag and RECRULE files were also explicitly documented and reviewed in the Fire Scenario Selection study.
FQ-E1-04 (finding)	Several Human Failure Events (HFEs) were discovered to have a failure probability set to zero during the quantification instead of the documented screening value of 1.0 developed during the HRA task. Examples include: 1RWT-SI-MVX---HR, 1SG-OVFLAFAS- HR, 4SDCPROC-OP--2HR, 4SIAB-ILOKOVR-HL. Having the HEPs set to zero potentially impacts the quantification results and the ability to identify significant contributors to CDF, such as initiating events, accident sequences, equipment failures, common cause failures, and operator errors. FQ-E1 requires identification of significant contributors in accordance with HLR-QU-D and HLR-LE-F and their SRs in Part 2. QU-D6 requires identification of significant contributors to CDF, such as initiating events, accident sequences, equipment failures, common cause failures, and operator frequencies and event mitigation Recommendation: Systematically identify HEPs that were inappropriately credited as perfectly reliable (set to zero), correct the HEPs to either their screening value or an estimated HEP based on a detailed analysis, re-quantify the model and identify significant contributors to CDF, such as initiating events, accident sequences, equipment	A full review of the HRA Calculator database, HRA spreadsheet, and the fault tree database ".RR" file was conducted. To correct the identified discrepancies, all HEPs were validated against the HRA Calculator. The HFE spreadsheet numbers were validated to the HRA Calculator and revised to match the HRA Calculator. The spreadsheet was then validated against the Fire HRA screening and any unscreened HRAs added to the HFE spreadsheet and developed in the HRA Calculator for fire. A worksheet was added to the HFE spreadsheet to compute multipliers and input those values into the "matrix" worksheet in the spreadsheet. All fire HEPs from the spreadsheet were then validated in the ".RR" file, and revised to match the spreadsheet if different. This validated all of the HFE values to be correct and corrected any that had been inadvertently set to a different value such as zero.

Focused-Scope Fire PRA Peer Review Findings and Resolutions		
F&O	**Issue**	**Resolution**
	failures, common cause failures, and operator errors.	
FSS-D2-01 (finding)	Generic HGL calculations were performed using CFAST and documented in Hughes Report 0001-0014-002-002, Rev. 1. The CFAST HGL results have not been applied in a manner consistent with the limitations and assumptions described in the report. The report lists limitations for application of the HGL results. Limitation 1 says "The generic fire scenarios are limited to configurations that are similar to or are bound by the configurations modeled." Limitation 5 says "The enclosure dimensions are limited to an aspect ratio (length to width) of 5:1." Limitation 6 says "The actual room width to height or room length to height ratio should be less than 5.7". It appears that the CFAST HGL results have been applied to rooms that do not fall within the limitations. Two examples are FC42D and FC37, which are not simple parallelepipeds, as assumed in the CFAST calculations, but are interconnected corridor-like rooms, with aspect ratios outside of the limitations. Assumption 15 of the CFAST HGL report says "When assessing the hot gas layer conditions in spaces with an elevated fire base, only the enclosure volume above the fire base should therefore be included." In reviewing the FSS database, table "tbl_Raw_Ignition_Source_Data", it does not appear that this was taken into consideration. Recommendation: A review of the fire compartment configuration and the fire height for each application of the CFAST HGL results is needed to ensure that the generic CFAST results are applied in accordance with the assumptions and limitations listed in the report.	Generic CFAST evaluations were revised to be specific to account for the limitations and assumptions of the area being modeled. All fire compartments were systematically reviewed to locate areas within each fire compartment where the room length-width aspect ratio restriction (Limitation 5) was exceeded. Each fire compartment plan drawing in the Pre-Fire Strategies was scanned to identify narrow enclosures. When a narrow enclosure was identified, then Fire Scenario Selection study Attachment 7 "Cable & Raceway Layout Drawings with Scenario Zones-of-Influence" was consulted to identify any ignition source located within in the restricted enclosure. The ignition source scenario was corrected in FSS Database table "tbl_raw_Ignition_Source_Data" to indicate the scenario can progress to hot gas layer. In addition, the time to hot gas layer was adjusted to equal the time to damage the first target. Twelve scenarios were adjusted that comprised three fire compartments, FC37, FC39, and FC57J. FC42D had no scenarios that needed to be adjusted because the aspect ratios in the sub-areas did not exceed Limitation 5. Assumption 15 was addressed by reducing the ceiling height by two meters for ignition frequency bin 15.1. . Nine compartments were affected by the lower enclosure volume that impacted 27 ignition sources.
FSS-G5-01 (suggestion)	Two types of active fire barriers are listed in Table 5.1-1 of the PP notebook: (1) fire dampers and (2) fire doors that	A generic barrier failure probability (BFP) of 0.05 is applied to FC12-to-FC14 and FC13-to-FC14 for the

Focused-Scope Fire PRA Peer Review Findings and Resolutions		
F&O	**Issue**	**Resolution**
	are magnetically held open and close upon a fire alarm.The barrier failure probabilities (BFPs) are taken from NUREG/CR-6850. The BFP applied for the normally open door (e.g., FC12-to-FC14) is taken to be the same as a fire door that is closed. No consideration is given to a failure of the fire detector to activate the door closure. Recommendation: It is suggested that the smoke detector failure probability of 0.05 (NUREG/CR-6850, App. P) be used in the BFP calculation.	"Fire Detector to Activate Door Closure" barrier type. FPRA – Fire Scenario Selection Study Table 4-10 has been revised to include this generic failure probability with the others which are obtained from NUREG/CR-6850, Appendix P. The BFP is documented in the TBL_*MCA_BARRIER_COUNT* table of FSS Database.
PRM-A3-01 (finding)	During review of the PRM Notebook and associated documentation several inconsistencies and reference errors were identified. These items did not appear to impact the final modeling but could be misleading to reviewers and individuals responsible for model maintenance. The following examples were noted: • Section 4.3.1 does not list everything from the Equipment Selection report Table 5.4-1 (loss of RCS makeup, spurious isolation of tanks, VCT isolation valve openings, spurious starts of RHR, others); • Section 4.3.3 does not list induced LOCA discussed in section 5.3 of the ES Report; • Section 4.3.4.1 refers to the ES Notebook Section Attachment 1 for "always failed" components, but Attachment 1 is the annunciator response review; • Section 4.3.4.2 refers to the HRA Notebook Section 4.3.4 for dependency analysis but the dependency analysis is found in Section 4.2.4; • Section 4.3.5.2 indicates a truncation limit of 1E-7 and 1E-8 is used for CDF and LERF, respectively, but section 4.3.5.5 indicates values of 1E-8 and 1E-9; • Table 4.3.5.2-1 does not include discussion of the MUTEX modeling added for the Train E changing pump power alignments.	The PRM Study and associated Fire PRA studies have been correlated to eliminate inconsistencies and cross reference errors. The following corrections were incorporated during this review to address the Finding details: • PRM Section 4.3.1 (now 4.2.1) addresses all of the initiating events described at the end of Section 5.3 in the Equipment Selection Study where it is cross-referenced. PRM Section 4.3.1 also references the summary at the end of Section 5.4 in the Equipment Selection Study which lists the MSO scenarios modeled as a result of the evaluation in Section 5.4. The PRM addresses the equipment identified to be modeled from the Equipment Selection study, not all of the equipment that was evaluated, so it matches the summary/results, not the contents of the table. • PRM Section 4.3.3 (now 4.2.3) added the word "induced" to the ISLOCAs initiated by fire induced valve failure. • PRM Section 4.3.4.1 (now 4.2.4.1) cross references were corrected to the proper

Focused-Scope Fire PRA Peer Review Findings and Resolutions		
F&O	**Issue**	**Resolution**
	PRM-A3 requires the PRM model to be capable of identifying the fire risk significant contributors. Errors in interpretation or future maintenance could impact the ability of the Fire PRA plant response model to be capable of determining the significant fire risk contributors. Recommendation: Perform a detailed review of the PRM Notebook to identify any additional inconsistencies and reference errors; correct the items noted under this F&O and any other items identified that could negatively impact the ability of the PRM to determine the significant fire risk contributors.	locations in the final studies. • PRM Section 4.3.4.2 (now 4.2.4.2) was revised to generically explain the final process used to correct for dependencies. • PRM Sections 4.3.5.2 through 4.3.5.5 were deleted. The quantification process as described in the Fire PRA Qualitative & Quantitative Screening and Fire Quantification study was revised to be comprehensive of the entire quantification process and corrected to the final methodology. • Discussion of the MUTEX modeling for the Train E charging pump was provided in the Fire PRA Qualitative & Quantitative Screening and Fire Quantification study Table 7.1-1.
PRM-B6-01 (finding)	During review of the PRM Notebook and associated documentation, issues with clarity and completeness were identified. The applicable elements from Standard Section 2, AS-A1 through AS-B7 were reviewed and, except for AS-A10, were determined to be appropriately addressed with respect to modeling the required PRM elements for the fire risk assessment. The basis for modeling certain elements of the new RCP seal failure modes is not clearly documented and is inconsistent with the description provided in LTR-RAM-II-13-035. Specifically, guaranteed damage to the seals on running RCPs with a loss of cooling is modeled to occur at 45 minutes but is assumed in LTR-RAM-II-13-035 to occur at 20 minutes, which impacts system and operator response requirements under AS-A10. The basis for this modeling decision needs to be clearly documented and between the PRM developed for RCP seal leakage and the	The time requirement to trip the RCPs to preclude guaranteed seal failure during a Loss of RCP Seal Cooling MSO scenario was adjusted from 45 minutes to 20 minutes. This removed the inconsistency and aligned the model with the methodology outlined in the referenced documents LTR-RAM-II-13-035 "PRA Model for Loss of Cooling to RCP Seals and Bearings at Palo Verde Units 1, 2 and 3", and WCAP-16175-P-A "Model for Failure of RCP Seals Given Loss of Seal Cooling in CE NSSS Plants". Documentation of the basis was revised to provide a more direct relation to the methodology source documents. The Loss of Seal Cooling event tree was also amended to include a Primary Safety Valve (PSV) failure to reseat sequence consistent with the Loss of Feedwater Pumps (IEFWP) event tree given that

Focused-Scope Fire PRA Peer Review Findings and Resolutions		
F&O	**Issue**	**Resolution**
	"Misc Event" uncomplicated SCRAM PRM from the internal events model. Additionally, the modifications to the Misc Event PRM, specifically, the removal of the PSV failure event tree top for application to the RCP leakage PRM, should be documented taking into account that a PSV LOCA could be concurrent with up to 4 RCP seal leakage events. The purpose would be to demonstrate that these concurrent events do not impact the downstream PRM. PRM-B6 requires the PPA to model accident sequences for any new initiating events identified per PRM-B3 and any accident sequences identified per PRM-B5 reflective of the possible plant responses to the fire induced initiating events in accordance with HLR-AS-A and HLR-AS-B and their SRs in Part 2 taking fire impacts into consideration. AS-A10 requires inclusion, for each modeled initiating event, sufficient detail that significant differences in requirements on systems and operator responses are captured. Accurate documentation and justification for modeling decisions are important to understand potential impact on these requirements. Recommendation: Documentation for the identified items should be enhanced to clarify the ties between the internal events PRM and the fire PRM as well as the changes made. Justification for RCP damage timing needs to be clearly documented and consistent with the final modeling. Alternatively, a sensitivity could be performed to determine the importance of this modeling decision and either modeling or documentation changes made based on the results.	Main Feedwater is modeled as always failed. The model adjustments were completed after the final model quantification results had been prepared and documented. Therefore, the Quantification study was amended with Appendix A to document the revised model results. Impact on the quantification review of dominant factors and event importances was also assessed and documented in the Appendix. The original quantification provides for a de-facto sensitivity case for the effect of increasing the minimal acceptable time to trip the RCPs upon loss of all seal cooling from 20 minutes (conservatively modeled with a bounding seal failure probability) to 45 minutes (more representative of manufacturer testing and industry experience demonstrating no catastrophic seal failures.)
QLS-A1-01 (finding)	The QLS-A1-01 requirement is to retain for quantitative analysis those physical analysis units that contain equipment or cables required to ensure as-designed circuit operation, or whose failure could cause spurious operation, of any equipment, system, function, or operator action credited in the Fire PRA plant response model.	The Fire Quantification Study was revised to describe the quantitative screening criteria that were used. Fire Compartments (FCs) were screened from quantitative analysis by analyzing them from two

Focused-Scope Fire PRA Peer Review Findings and Resolutions		
F&O	**Issue**	**Resolution**
	The criteria for quantitative screening, section 5.2 of the Quantification and Screening notebook, is not clear. As can be seen below the criteria is confusing: 5.2 Quantitative Screening Table 5.2-1 presents all the FC's with their respective FAA's and their CDF and LERF contributions. Columns 7, 8, 9 and 10 are marked with an "X" if the FC or FAA contribution is < 1% of the estimated total CDF and LERF. Values of .04%CDF and .007% LERF were selected to establish a conservatively low limit to ensure that the sum of all screened fire compartments would not exceed 1E-7/yr. CDF and 1E-8/yr. Fire Compartment thresholds, nor exceed the 10% Internal Events threshold. Therefore if columns 7, 8, 9 and 10 are marked with an "X" then that FC may be screened from further analysis. An FC that meets the screening criteria for low CDF and LERF will screen out from fire modeling only if it's respective FAA also screens out. This is further represented in the last column of Table 5.2-1. The screening criteria can be interpreted as being 10% or .04% and .007% for both fire compartments and fire areas. Review of the spreadsheet used for the screening showed what criteria was used. The method in the spreadsheet agrees with NUREG/CR-6850 for fire compartments. So this meets the SR. The basis for the fire area criteria is not documented and is confusing. The spreadsheet shows it to be .04% and .007% which is reflected in Table 5.2-1 of the Quantification and Screening notebook. Recommendation: To ensure that the criteria is met, the criteria needs to be stated in Section 5.2 of the Quantification and Screening Notebook in a clear and	different perspectives, single compartment and cumulative compartment. Single compartment risk criteria screens each FC if its risk is less than 1E-7/yr for CDF and less than 1E-8/yr for LERF. The single compartment thresholds for both CDF and LERF were established as follows: CDF FC Threshold = 1E-7 / Total CDF = 0.433% LERF FC Threshold = 1E-8 / Total LERF = 0.4596% Additionally, to ensure that the highest risk Fire Analysis Areas (FAAs) and their associated FCs are not screened, a FAA screening criteria of 0.1% was conservatively selected such that the sum of the risk contribution from all FCs within the screened FAAs remains less than 1.0E-7/yr and <1.0E-8/yr for CDF and LERF, respectively. Furthermore, the CDF and LERF cumulative compartment risk criteria is based on limiting the cumulative risk of screened out compartments to less than 10% of the total internal events risk (i.e., from the Internal Events PRA). The cumulative compartment thresholds for both CDF and LERF were determined as follows: CDF Total screened FC acceptance criteria = (Internal Events CDF) * 0.1 = 1.27E-07 LERF Total screened FC acceptance criteria = (Internal Events LERF) * 0.1 = 4.33E-09 The single compartments threshold and FAA screening criteria values were selected to ensure

Focused-Scope Fire PRA Peer Review Findings and Resolutions		
F&O	**Issue**	**Resolution**
	concise manner. It also needs to agree with the method used in the spreadsheet. Rewrite Section 5.2 so that the screening criteria is clear and the basis is documented.	that the cumulative compartment risk criteria were met. An FC screens out as a low risk contributor when the single and cumulative risk criteria are met for both the FC and its associated FAA.
UNC-A1-01 (finding)	Back-reference SR QU-E2 states: IDENTIFY assumptions made in the development of the PRA model. Many instances were found where assumptions were found in notebooks that were not documented in the assumption section. This could lead to missing area that need to be address in the uncertainty analysis. The following are examples of assumptions that were not included in the uncertainty analysis but were assumptions in the notebooks: 1. The scenario in which it is assumed that a spurious alarm has caused the operators to trip one of the charging pumps is functionally equivalent to the pump failing to run 2. The Fire PRA model assumes spurious operation of one or more pressurizer heater banks precedes PSV failure to reseat after steam relief (gate GPSV-STM-CHAL-FIRE) and spurious operation of charging pump(s) precedes PSV failure to reseat after water relief scenario (gate GPSV-WTRCHAL- FIRE). Recommendation: Review documents and verify that where the word "assumes" is used that an actual assumption is being made. If it is an actual assumption ensure that the statement is included in the assumption section and the basis for the assumption is documented. A review should then be performed to be sure that the assumption is being addressed appropriately in the uncertainty analysis.	The listed examples have been revised to correct the inappropriate application of the word “assume.” The examples were revised in the Plant Response Model study as follows: 1. The scenario in which a spurious alarm has caused the operators to trip one of the charging pumps is functionally equivalent to the pump failing to run. 2. The Fire PRA models spurious operation of one or more pressurizer heater banks precedes PSV failure to reseat after steam relief (gate GPSV-STM-CHAL-FIRE) and spurious operation of charging pump(s) precedes PSV failure to reseat after water relief scenario (gate GPSV-WTR-CHAL-FIRE). Additionally, a review of all assumptions in all Fire PRA studies was performed to ensure that where the word “assumes” is used that an actual assumption was being made. The Fire PRA studies were revised if an inappropriate application of the word “assume” was used. All assumptions have been documented in the assumption section for each appropriate Fire PRA study. Each of the assumptions listed in the Fire PRA studies in the “Assumptions” section were reviewed, and a determination was made on whether or not it was a key assumption, or if it was merely a statement of fact or a methodology. Only assumptions important to the final risk results were included for consideration in the Uncertainty and Sensitivity

Focused-Scope Fire PRA Peer Review Findings and Resolutions		
F&O	**Issue**	**Resolution**
		Analyses [UNC] study.
UNC-A1-02 (finding)	Back-reference SR LE-F2 states: REVIEW LERF contributors for reasonableness (e.g., to assure excessive conservatisms have not skewed the results, level of plant specificity is appropriate for significant contributors, etc.). Back-reference SR LE-F3 states: IDENTIFY and characterize the LERF sources of model uncertainty and related assumptions in a manner consistent with the applicable requirements of Tables 2-2.7-2(d) and 2-2.7-2(e). There is a statement in the Uncertainty Analysis notebook that this analysis was not performed for LERF. Upon review of the notebook it was found that for some uncertainty analyses were run for both CDF and LERF. A review of the uncertainty analysis should be performed and all uncertainty analysis should be performed for CDF and LERF. Recommendation: Review all the uncertainty analysis and ensure that the analysis was performed for both CDF and LERF. Also ensure that the documentation reflects the analysis of both CDF and LERF.	The Uncertainty and Sensitivity Analyses [UNC] study was revised to document that both CDF and LERF analyses were performed for all sensitivity cases.
UNC-A1-03 (finding)	Back-reference SR QU-E4 states: For each source of model uncertainty and related assumption identified in QU-E1 and QU-E2, respectively, IDENTIFY how the PRA model is affected (e.g., introduction of a new basic event, changes to basic event probabilities, change in success criterion). The uncertainty analysis, for the most part, does not include any review of the uncertainty results. Therefore, how the PRA model was affected and a check for the reasonableness was not documented. Therefore it is not clear that a check for reasonableness was performed. Recommendation: Perform a review of the results of each uncertainty result. Ensure that these reviews are documented in the Uncertainty Analysis Notebook.	A review was performed for all sensitivity cases in the Uncertainty and Sensitivity Analyses [UNC] study. The results were reviewed for reasonableness and described. In addition, all sensitivity cases were reviewed for their impact on the PRA model.
UNC-A1-04 (finding)	The following statement was made after several sensitivity results tables:	The Uncertainty and Sensitivity Analyses [UNC] study was revised to document both CDF and LERF

Focused-Scope Fire PRA Peer Review Findings and Resolutions		
F&O	**Issue**	**Resolution**
	Because of the way the cutsets were created, the numbers are not correct. The exercise here is to show the ratios. This statement negates any of the results reported in the results table. If the numbers are incorrect, then the use of the numbers for comparison to the base value is invalid. There appears no reason to do the sensitivity if the results are incorrect and the ratio obtained offers no insights to uncertainty. This statement draws into question the validity of the uncertainty analysis. Recommendation: First, ensure that the purpose of the statement is understood. Next, either explain the purpose or remove the statement. The uncertainty analysis should use valid results and ratios.	analyses for all sensitivity cases. Its results were reviewed to ensure the validity of the sensitivity cases. The uncertainty analysis study reports valid results and ratios. The statement referenced in the Finding no longer appears after tables in the sensitivity results.

NRC Technical Concern 4

The PVNGS LAR, dated December 21, 2016, states that the plant-specific risk assessment of the proposed change to the TS CT follows the guidance in RG 1.174, Revision 2, and RG 1.177, Revision 1. Both of these regulatory guides endorse the guidance in RG 1.200, Revision 2, as an acceptable approach for determining whether the technical adequacy of the PRA is sufficient for use in regulatory decision-making (e.g., changes to a plant's licensing basis). RG 1.200 endorses, with clarifications and qualifications, the ASME PRA Standard. Section 5-2.3, "Seismic Plant Response Analysis," of the ASME PRA Standard states:

> "The restoration of safety functions can be inhibited by any of several types of causes; these include damage or failure, access problems, confusion, loss of supporting staff to other post[-]earthquake-recovery functions, and so on. Careful consideration of these must be given before recoveries are credited in the initial period after a large earthquake. This is especially true for earthquake-caused loss of off-site power (LOOP), given that the damage could be to switchyard components or to the off-site grid towers, which are generally difficult to fix quickly. While this part does not require the analyst to assume an unrecoverable LOOP after a large earthquake, the general practice in seismic PRAs has been to make such an assumption."

Attachment 11 of Enclosure 2 to the LAR discusses a seismic assumption/uncertainty regarding LOOP recovery. The licensee states:

> "It is realistic to consider that offsite power recovery is available for low magnitude seismic events. The selection of the [safe shutdown earthquake] SSE as a threshold between recovery/no-recovery of offsite power is arbitrary and conservative. Therefore, no sensitivity analysis is required for this application."

Provide additional justification for this assumption and why it is considered conservative. Explain whether it is conservative in terms of baseline risk (i.e., CDF and LERF) or delta risk (i.e., ICCDP and ICLERP). Include in this discussion your assumptions about damage to switchyard components, offsite power transformers, or to the off-site grid towers, which are generally difficult to fix quickly. Alternatively, alter the credit for offsite power recovery in the seismic PRA as part of the sensitivity analysis.

APS Response to Technical Concern 4:

The one seismically-induced LOOP that has occurred in the United States was at the North Anna site. The induced LOOP was determined to be caused by spurious actuation of the sudden pressure relays causing a protective lock out of the Reserve Station Service Transformers (RSST). The Peak Ground Acceleration (PGA) for that event was approximately 0.26g. While this was a significant event, it did not involve widespread infrastructure impact. The PVNGS SSE is 0.25g, which is bounded by this event which did not involve infrastructure collapse.

A potential cause of seismically induced loss of offsite power is collapse of transmission lines, which have been historically shown to occur for events in the 0.3g range. Transmission line collapse is expected to be bound by grid failures and exceeds the PVNGS SSE threshold.

A documented comment from the Seismic PRA Peer Review was that the selection of the SSE value for when to stop crediting LOOP recovery was judged to be appropriate, as no documentation exists on seismic-specific offsite power recovery.

In addition, the selection of the SSE (0.25g) as the threshold between recovery/non-recovery is considered to be conservative because of a robust switchyard design at PVNGS. Seven physically independent 525 kV transmission lines of the Western Interconnection are connected to the Palo Verde 525 kV switchyard. The transmission lines have a diverse path to the switchyard, with a maximum of three lines sharing a common routing. Three 525 kV tie lines supply power from the switchyard to three startup transformers, which supply power to six 13.8 kV intermediate buses. Two physically independent circuits supply offsite power to the onsite power system of each unit. The three startup transformers connect to the Palo Verde 525 kV switchyard through two 525 kV switchyard breakers each, and feed six 13.8 kV intermediate buses. These buses are arranged in three pairs, each pair feeding only one unit. Therefore, with the robust design and rare occurrence of seismically-induced Loss of Offsite Power in industry, the modeling recovery/non-recovery threshold at the SSE is conservative.

NRC Technical Concern 5

The PVNGS LAR, dated December 21, 2016, states that the plant-specific risk assessment of the proposed change to the TS CT follows the guidance in RG 1.174, Revision 2, and RG 1.177, Revision 1. Section 2.5.5, "Comparisons with Acceptance Guidelines," of RG 1.174 states that when the contributions from the contributors modeled in the PRA are close to the risk acceptance guidelines, the argument that the contribution from the missing items is not significant must be convincing and in some cases may require additional PRA analyses (e.g., bounding analyses, detailed analyses, or by a demonstration that the change has no impact on the unmodeled contributors to risk). When the margin is significant, a qualitative argument may be sufficient. In addition, Section 2.5.3, "Model Uncertainty," of RG 1.174 states that the impact of using alternative assumptions or models may be addressed by performing appropriate sensitivity studies or by using qualitative arguments.

Section 2.3 of Enclosure 2 to the LAR states that the fire PRA model is consistent with the NUREG/CR-6850 (dated September 2005) methodology with "no exceptions." However, there have been numerous changes to fire PRA methodology since 2005, including the following:

- The NRC staff has formally accepted methods during resolution of unreviewed analysis methods (UAMs) for fire PRAs, as well as NUREG/CR-6850 (as supplemented in September 2010), or frequently asked question (FAQ) guidance developed for the National Fire Protection Association Standard (NFPA) 805, "Performance Based Standard for Fire Protection for Light Water Reactor Electric Generating Plants." FAQs that may be relevant for the fire PRA include:

  FAQ 13-0004, (ADAMS Accession No. ML13322A085)
  FAQ 13-0005, (ADAMS Accession No. ML13319B181)
  FAQ 13-0006, (ADAMS Accession No. ML13331B213)
  FAQ 14-0008, (ADAMS Accession No. ML14190B307)
  FAQ 14-0009, (ADAMS Accession No. ML15119A176)
  FAQ 12-0064, (ADAMS Accession No. ML12346A488)
  FAQ 08-0053. (ADAMS Accession No. ML121440155)

FAQ 08-0052, (ADAMS Accession No. ML092120501)
FAQ 08-0050, (ADAMS Accession No. ML092190555)
FAQ 08-0049, (ADAMS Accession No. ML092100274)
FAQ 08-0045, (ADAMS Accession No. ML091240311)
FAQ 08-0044, (ADAMS Accession No. ML092110516)
FAQ 08-0043, (ADAMS Accession No. ML092120448)
FAQ 08-0042, (ADAMS Accession No. ML092110537)
FAQ 07-0035, (ADAMS Accession No. ML091620572)
FAQ 07-0031, (ADAMS Accession No. ML072840658)
FAQ 06-0018, (ADAMS Accession No. ML072500273)
FAQ 06-0017, (ADAMS Accession No. ML072500300)
FAQ 06-0016, (ADAMS Accession No. ML072700475)

- The NRC has also issued a letter, "Recent Fire PRA Methods Review Panel Decisions and EPRI 1022993, 'Evaluation of Peak Heat Release Rates in Electrical Cabinet Fires" (ADAMS Accession No. ML12171A583), June 21, 2012, providing staff positions on 1) frequencies for cable fires initiated by welding and cutting, 2) clarifications for transient fires, 3) alignment factor for pump oil fires, 4) electrical cabinet fire treatment refinement details, and 5) the EPRI 1022993 report.

- The NRC has published NUREG/CR-7150, "Joint Assessment of Cable Damage and Quantification of Effects from Fire (JACQUE-FIRE)," Volume 2, which is supported by a letter from the NRC to NEI, "Supplemental Interim Technical Guidance on Fire-Induced Circuit Failure Mode Likelihood Analysis" (ADAMS Accession Nos. ML14086A165 and ML14017A135).

- The NRC has published NUREG-2169, "Nuclear Power Plant Fire Ignition Frequency and Non-Suppression Probability Estimation Using the Updated Fire Events Database: United States Fire Event Experience Through 2009" (ADAMS Accession No. ML15016A069).

- Guidance on the credit taken for very early warning fire detection system (VEWFDS) is available in NUREG-2180, "Determining the Effectiveness, Limitations, and Operator Response for Very Early Warning Fire Detection Systems in Nuclear Facilities, (DELORES-VEWFIRE)" (ADAMS Accession Nos. ML16343A058). The guidance provided in FAQ 08-0046, "Closure of National Fire Protection Association 805 Frequently Asked Question 08-0046 Incipient Fire Detection Systems" (ADAMS Accession No. ML093220426), has been retired.

Based on the PVNGS LAR, dated December 21, 2016, the calculated incremental conditional core damage probability (ICCDP) and incremental conditional large early release probability (ICLERP) are close to the RG 1.177 risk acceptance guidelines. However, the integration of NRC-accepted fire PRA methods and studies described above that are relevant to this submittal could potentially result in an exceedance of the risk acceptance guidelines. For example, previous risk-informed LARs have shown that integration of NRC approved methods can lead to a calculated risk increase of up to approximately 3 in some cases. Therefore, in accordance with Section 2.5.5 of RG 1.174, additional analysis is necessary to ensure that contributions from this influence would not change the conclusions of the LAR. The NRC staff requests the licensee address one of the following:

(a) Provide a detailed justification for why the integration of NRC-accepted fire PRA methods and studies in the fire PRA would not change the conclusions of the LAR.

As part of this justification, identify the fire PRA methodologies used in the fire PRA that have not been formally accepted by the NRC staff. For these methodologies, provide technical justification for their use and evaluate the significance of their use on the results of this submittal.

(b) Alternatively, demonstrate through a sensitivity study of the proposed TS change, which credits the compensatory measures, that the risk results (i.e., total ICCDP and total ICLERP) meet the risk acceptance guidelines by a large margin. This sensitivity study may take into consideration, as necessary, credit for compensatory measures such as deployment of the portable AC diesel generators and the diesel-driven FLEX steam generator makeup pump, provided that they are modeled in a way that is consistent with RGs, 1.174, 1.177, and 1.200. Provide the associated risk results (i.e., those results in Attachments 2 and 3 of Enclosure 2 to the LAR) and a discussion of how the compensatory measures were credited in the PRA models, including:

- Discuss the conservatisms in the analysis.
- Discuss which accident scenarios were credited for the compensatory measures.
- Explain how the failure rates/probabilities of hardware failures (e.g., random failures, unavailability due to testing and maintenance) associated with setup and operation were estimated.
- Explain how the timelines for operator actions were established. Describe the cues or indications operators will use to initiate use of credited FLEX equipment and how the time available and time required to complete operator actions were estimated.

APS Response to Technical Concern 5:

The fire PRA model used for this application utilized NUREG/CR-6850 including FAQs as the basis for methodology and did not use any unendorsed/unapproved methods. However, some of the more recent endorsed methods have not yet been incorporated into the fire PRA model. Resolution of these differences in the short time frame available for NRC to review this application is impractical. Therefore, APS will utilize the suggested alternative in (b) above to address the NRC technical concern.

A sensitivity was performed crediting the portable diesel generators deployed at Unit 3 in the fire PRA analysis. The failure rates assumed for the portable diesel generators were based on EWR 16-08430-004 "Document Compliance with NRC RIS 2008-15 and NEI 16-06 for Crediting of 4160V FLEX Generators" and dominated by the human error probability (see HRA provided later in Attachment 16):

- Failure to start 3.22E-1
- Failure to run for 24 hours 1.04E-1

The portable AC diesel generators were modeled for the sensitivity case by substituting the portable AC diesel generator HRA and data values in place of corresponding basic events in the Train B Emergency Diesel Generator logic. As such, any scenario that may credit the Train B Emergency Diesel Generator for emergency AC power may credit the portable AC diesel generators in the sensitivity case.

The fire induced initiating events either initially require restoration of steam generator heat removal or are slow developing events that eventually require safety injection. These accident progressions allow sufficient time to restore power to the class bus in

order to recover safety functions and mitigate the event. The dominant fire scenarios that challenge RCS Integrity (induce an RCP Seal Leak) are initiated by a failure to de-energize an RCP which is generally not the case for Loss of Offsite Power events that predominantly challenge the Class 4160 VAC buses.

The impact of crediting the portable diesel generators on the risk metrics is found in the table below. There was a significant reduction in ICCDP and ICLERP, and margin to the RG 1.177 acceptance criteria. Note that effective compensatory measures remain uncredited including the FLEX steam generator makeup pump deployed at Unit 3. When doing so, a greater than 50 percent reduction in ICCDP and ICLERP is achieved.

ICCDP and ICLERP for One-Time Technical Specification Change

Hazard	**ICCDF (per reactor-year)**	**ICCDP (62 days)**	**ICLERF (per reactor-year)**	**ICLERP (62 days)**
Internal events	1.2E-6	2.0E-7	5.5E-8	9.3E-9
Internal flooding	<1.0E-7	<1E-8	<1.0E-8	<1.0E-9
Seismic	4.1E-6	6.9E-7	3.2E-7	5.4E-8
Internal Fire	1.1E-5	1.8E-6	3.8E-7	6.4E-8
Total	1.6E-5	**2.7E-6**[1]	7.5E-6	**1.2E-7**[2]

Notes:
1. Total ICCDP meets the RG 1.177 acceptance criteria of < 1E-5 with effective compensatory measures not credited in the quantitative risk evaluation
2. Total ICLERP meets the RG 1.177 acceptance criteria of < 1E-6 with effective compensatory measures not credited in the quantitative risk evaluation

Additional Technical Concerns Provided in Pre-submittal Meeting

NRC Technical Concern 6:

Explain how the failure rates/probabilities of hardware failures (e.g., random failures, unavailability due to testing and maintenance) associated with setup and operation were estimated.

APS Response to Technical Concern 6:

A review of industry data sources was conducted to develop a fail to run and fail to start value for the portable AC diesel generators. Ultimately, the NRC RADS database values for Station Blackout emergency diesel generators were selected. The portable AC diesel

generators are similar equipment to Station Blackout emergency diesel generators, and the RADS database had greater detail and was more current than other data sources. See Engineering Evaluation 16-08430-004 for further details.

NRC Technical Concern 7:

Determine the impact on ICCDP and ICLERP result from assuming average test and maintenance during the extended completion time.

APS Response to Technical Concern 7:

A sensitivity case was run assuming average test and maintenance unavailabilities and crediting the portable diesel generators. The results are provided below in the table and they continue to meet RG 1.177 acceptance criteria. Note that effective compensatory measures remain uncredited including the FLEX steam generator makeup pump deployed at Unit 3. When crediting the portable DGs this study indicates a greater than 28 percent reduction in ICCDP and ICLERP.

ICCDP and ICLERP for One-Time Technical Specification Change

Hazard	**ICCDF (per reactor-year)**	**ICCDP (62 days)**	**ICLERF (per reactor-year)**	**ICLERP (62 days)**
Internal events	1.2E-6	2.0E-7	5.5E-8	9.3E-9
Internal flooding	<1.0E-7	<1E-8	<1.0E-8	<1.0E-9
Seismic	4.1E-6	6.9E-7	3.2E-7	5.4E-8
Internal Fire	3.3E-5	5.6E-6	7.8E-7	1.3E-7
Total	3.8E-5	**6.5E-6**[1]	1.2E-6	**2.0E-7**[2]

Notes:
1. Total ICCDP meets the RG 1.177 acceptance criteria of < 1E-5 with effective compensatory measures not credited in the quantitative risk evaluation
2. Total ICLERP meets the RG 1.177 acceptance criteria of < 1E-6 with effective compensatory measures not credited in the quantitative risk evaluation

NRC Technical Concern 8:

Determine the impact on ICCDP and ICLERP result from assuming an increased common cause potential for failure of the train 'A' diesel generator during the during the extended completion time.

APS Response to Technical Concern 8:

A sensitivity case was run assuming an increase in the train "A" DG common cause failure rate to the NRC database common cause alpha factor and crediting the portable DGs. The results are provided below in the table and they continue to meet RG 1.177 acceptance criteria. Note that effective compensatory measures remain uncredited including the FLEX steam generator makeup pump deployed at Unit 3. When crediting the portable DGs this study indicates a greater than 50 percent reduction in ICCDP and ICLERP.

ICCDP and ICLERP for One-Time Technical Specification Change

Hazard	**ICCDF (per reactor-year)**	**ICCDP (62 days)**	**ICLERF (per reactor-year)**	**ICLERP (62 days)**
Internal events	1.2E-6	2.0E-7	5.5E-8	9.3E-9
Internal flooding	<1.0E-7	<1E-8	<1.0E-8	<1.0E-9
Seismic	4.1E-6	6.9E-7	3.2E-7	5.4E-8
Internal Fire	1.2E-5	2.0E-6	4.1E-7	7.0E-8
Total	1.7E-5	**2.9E-6**[1]	7.8E-7	**1.3E-7**[2]

Notes:
1. Total ICCDP meets the RG 1.177 acceptance criteria of < 1E-5 with effective compensatory measures not credited in the quantitative risk evaluation
2. Total ICLERP meets the RG 1.177 acceptance criteria of < 1E-6 with effective compensatory measures not credited in the quantitative risk evaluation

NRC Technical Concern 9:

Identify the sensitivity of changes in the human reliability analyses generated for this application on the ICCDP and ICLERP results.

APS Response to Technical Concern 9:

An inspection of the dominant fire PRA cutsets (i.e., scenarios) with train 'B' diesel generator out of service for repair in the base case results provided in Attachment 7 and sensitivity analyses provided in Attachment 16 indicates that the results are very

sensitive to the human reliability analyses generated for use of the firewater to auxiliary feedwater cross-connect to makeup a steam generator in a loss of all feedwater event and re-powering the train 'B' 4160V AC Class Bus from the portable diesel generators in a loss of offsite power event. It should be assumed that the ICCDP and ICLERP results for these cases will increase by the same percentage as an increase in each of these HRAs, since these events are contained in almost all the dominant cutsets. As a reminder, the portable diesel generators were not credited in the PRA analysis provided in Attachment 7, which is the basis for the proposed Completion Time request.

NRC Technical Concern 10:

Provide timing information for the new human error probabilities generated in support of this application.

APS Response to Technical Concern 10:

The system time window is estimated to be 75 minutes from MAAP4.0.4 case pzr1d, Study 13-NS-B065, Appendix C, Revision 6. This time window represents the time to recover AFN-P01 following the loss of all feedwater. This scenario accounts for a partial loss of power, meaning that there is a loss of power to the class bus with power still available to the non-class busses, and is bounding as all RCPs are still available, resulting in a shorter time to core damage. Normal expectation is that in a Loss of Offsite Power (LOOP) or Station Blackout (SBO) event, RCPs would not be available, and the system time window would then be 126 minutes (MAAP4.0.4 case pzr1c, Study 13-NS-B065, Appendix C, Revision 6. Therefore, Tsw = 75 minutes.

This event is only credited when the temporary 4160 VAC portable generators have been installed for risk reduction and PBB-S04 is to be energized from the temporary 4160 VAC portable generators. The loss of power to PBB-S04 is already diagnosed and other means of restoration attempted before the decision is made to use the 4160 VAC portable generators. However, since the system time window starts with the loss of power to PBB-S04, the time needed to diagnose loss of power and attempt to align another power source such as the SBOG must be accounted for with the delay time.

From the operator interviews, it would take approximately 2 minutes in the control room to diagnose the cues and initiate action to start the SBOGs. Per corrective action 3337041 (SBOG Timing), the recorded "total time" to start and be ready to load the SBOGs is 36 minutes. This was assumed as the time needed to identify that the SBOGs had failed. Therefore Tdelay = 38 minutes (2 minutes + 36 minutes).

The loss of power to PBB-S04 is already diagnosed and other means of restoration attempted before the decision is made to use the 4160 VAC portable generators. From the operator interviews, it would take approximately 2 minutes in the control room to initiate action to start the 4160 VAC portable generators (diagnosis time). Therefore diagnosis time = 2 minutes.

Once the SBOGs fail to start or load, the 4160 VAC portable generators will be used to provide power to PBB-S04 and start an auxiliary feedwater pump. No warm up time has been included in this HRA as the temporary 4160 VAC portable generators will have power supplied to the portable generator jacket water heaters as part of the installation work order (allows fast start of 10 seconds or less).

From the Operator interviews, it would take 15 minutes for the operators to complete the required actions per 40MT-9ZZ01 and an additional 5 minutes to start feeding the steam generators using AFN-P01 Appendix 41 of 40EP-9EO10. Therefore execution time = 20 minutes (15 minutes + 5 minutes). Subsequently, 40MT-9ZZ01 has been revised to improve operator response. Based upon operator walk-throughs with the revised procedures the maximum time recorded for these actions was 23 minutes.

Engineering Evaluation 16-08430-004 contains further details regarding development of this HRA.

The following are excerpts from the EPRI HRA Calculator report for the new human error probabilities generated for this risk assessment:

- Utilizing the portable diesel generators to supply a 4160VAC class bus
- Aligning the firewater to auxiliary feedwater cross-connect to inject into a steam generator
    - Normal (base case)
    - Crediting additional compensatory measures taken during extended completion time

In some cases, the following excerpts use train 'A' equipment, which is equivalent to the 'B' train.

1FLEX-4160V--FAIL, Operators Fail to Align the 4160 VAC Portable Generators

HEP Summary				
	Pcog	**Pexe**	**Total HEP**	**Error Factor**
Method	CBDTM	THERP	CBDTM+THERP	
Without Recovery	3.00E-03	3.21E-01		
With Recovery	1.51E-03	3.21E-01	3.22E-01	3

RAW	**FV**	**Risk Significant**
0.00E+00	0.00E+00	N/A

Identification and Definition

1. Initial conditions: Steady state, full power operation with the 4160 VAC portable generators staged and connected to Train A. The 4160 VAC portable generators have been connected due to a reduction in defense-in-depth to the MVAC safety function which is known and does not need diagnosis (for example Train A EDG outage). The temporary 4160 VAC portable generators are required to have power supplied to the portable generator jacket water heaters if the ambient temperatures are less than 100 degrees F (allows fast start of 10 seconds or less). However, to credit the 4160 VAC portable generators during a LOOP or Station Blackout, a night order or shiftly Control Room briefing is required with guidance to start the temporary 4160 VAC portable generators using 40MT-9ZZ01 if the emergency DG is unavailable and the SBOGs fail, due to simultaneously being in the EOPs.

2. Initiating event: Loss of Offsite Power (LOOP) or Station Blackout (SBO). This scenario is specifically accounting for a partial loss off power, meaning that we have a loss of power to the class bus with power still available to the non-class busses.

The partial loss of power is considered bounding as all RCPs are still available, which decreases the time before core damage. Failure of AFA-P01 is bounding, since use of motor-driven AFW pumps requires power. Since the AFN-P01 pump has more steps for startup, the HRA bounds the AFB-P01 pump.

3. Accident sequence - preceding functional failures and successes: Loss of Off-site power/SBO and/or loss of power to PBA-S03, Train A EDG unavailable, AFA-P01 fails to run, SBOGs fail to start or load.

4. Procedural progression: Operators start with Standard Post-Trip Actions to diagnose event. Since there are multiple functions not met (Loss of MVAC and Steam Generator Heat Removal), operators go to the Functional Recovery Procedure. Operators will enter 40AL-9RK1A to diagnose and proceed to 40MT-9ZZ01 Section 6.4 and Appendix D to energize PBA-S03 from the 4160 VAC portable generators and start AFN-P01 to feed the steam generators using Appendix 41 of 40EP-9EO10. Per Operator interview, energizing PBA-S03 from the 4160 VAC portable generator would be done in parallel to recovering Steam Generator Heat Removal.

5. Operator action high level success criteria: Operators successfully energize PBA-S03 using the temporary 4160 VAC portable generators and feed the steam generators using AFN-P01.

6. Timing analysis: The system time window is estimated to be 75 minutes from MAAP4.0.4 case pzr1d, Study 13- NS-B065 Appendix C (Revision 6). This time window represents the time to recover AFN-P01 following the loss of all feedwater. As previously noted, this scenario accounts for a partial loss off power, meaning that we have a loss of power to the class bus with power still available to the non-class busses, and is bounding as all RCPs are still available, resulting in a shorter time to core damage. Normal expectation is that in a Loss of Offsite Power (LOOP) or Station Blackout (SBO) event, RCPs would not be available, and the system time window would then be 126 minutes (MAAP4.0.4 case pzr1c, Study 13-NS-B065 Rev. 6 Appendix C). Therefore, Tsw = 75 minutes.

This event is only credited when the temporary 4160 VAC portable generators have been installed for risk reduction and PBA-S03 is to be energized from the temporary 4160 VAC portable generators. The loss of power to PBA-S03 is already diagnosed and other means of restoration attempted before the decision is made to use the 4160 VAC portable generators. However, since Tsw starts with the loss of power to PBA-S03, the time needed to diagnose loss of power and attempt to align another power source such as the SBOG must be accounted for with Tdelay.

From the operator interviews, it would take approximately 2 minutes in the control room to diagnose the cues and initiate action to start the SBOGs. Per corrective action 3337041 (SBOG Timing), the recorded "total time" to start and be ready to load the SBOGs is 36 minutes. This was assumed as the time needed to identify that the SBOGs had failed. Therefore Tdelay = 38 minutes (2 minutes + 36 minutes).

The loss of power to PBA-S03 is already diagnosed and other means of restoration attempted before the decision is made to use the 4160 VAC portable generators. From the operator interviews, it would take approximately 2 minutes in the control room to initiate action to start the 4160 VAC portable generators (Tcog). Therefore Tcog = 2 minutes.

Once the SBOGs fail to start or load, the 4160 VAC portable generators will be used to provide power to PBA-S03 and start AFN-P01. No warm up time has been included in this HRA as the temporary 4160 VAC portable generators will have power supplied to the portable generator jacket water heaters as part of the installation work order (allows fast start of 10 seconds or less). From the Operator interviews, it would take 15 minutes for the operators to complete the required actions per 40MT-9ZZ01 and an additional 5 minutes to start feeding the steam generators using AFN-P01 Appendix 41 of 40EP-9EO10. Therefore Texe = 20 minutes (15 minutes + 5 minutes).

Cues and Indications	
Initial Cue	Loss of PBA-S03
Recovery Cue	
Cue Comments	Although the evaluation refers to the A train for nomenclature, it is also applicable to B train.
Degree of Clarity	Clarity of Cues and Indications are modeled explicitly in CBDTM

Procedure	
Cognitive Procedure	40AL-9RK1A (Panel B01A Alarm Responses) Revision: 2B
Cognitive Step Number	Alarm Index 1A06B
Cognitive Instruction	IF ALL of the following: - PBA-S03 is deenergized - Temporary 4160V FLEX generators have been installed for risk reduction - The SM/CRS directs energizing PBA-S03 from the temporary 4160V FLEX generators

	THEN GO TO 40MT-9ZZ01, Operations Maintenance Activities, to energize PBA-S03 from the temporary 4160V FLEX generators
Execution Procedure	40MT-9ZZ01 (Operations Maintenance Activities) Revision: 2
Execution Instruction	IF directed by the SM/CRS, THEN perform Appendix D - Temporary 4160V FLEX Generator Use
Job Performance Measure	JPM: Not Selected

Notes
Per EWR 16-08430-004 Attachment G, each operating crew that comes on shift has designated operators that are responsible for reviewing 40MT-9ZZ01 Appendix D and walking down the 4160 VAC portable generators with the purpose of ensuring familiarity with the actions and equipment.

Crew Member	Included	Total Available	Required for Execution	Notes
Shift Manager	No	1	0	
Shift Supervisor	No	1	0	
STA	No	1	0	
Reactor operators	Yes	2	2	
Plant operators	Yes	4	3	Area 9 Operator required to start SBOG, so unavailable for action
Mechanics	Yes	2	0	
Electricians	Yes	2	0	
I&C Technicians	Yes	2	0	
Health Physics Technicians	Yes	2	0	
Chemistry Technicians	Yes	1	0	
Notes				

Timing Analysis

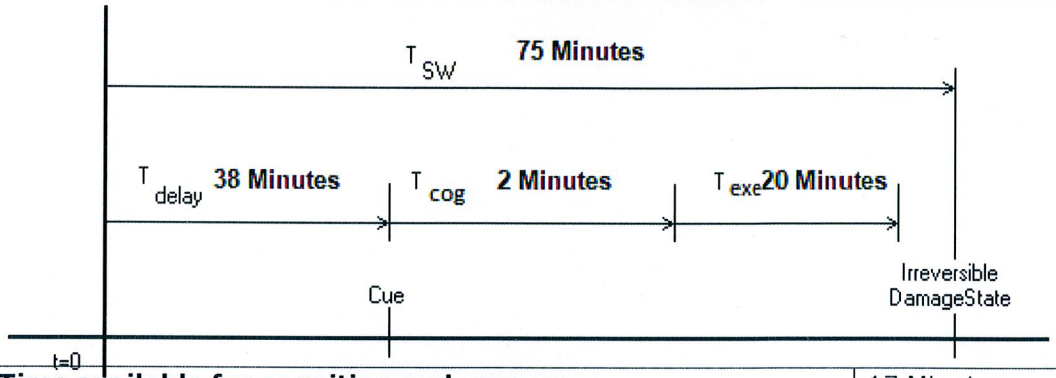

Time available for cognition and recovery	17 Minutes
Time available for recovery	15 Minutes
SPAR-H Available time (cognitive)	17 Minutes
SPAR-H Available time (execution) ratio	1.75 Minutes

EPRI Minimum level of dependence for recovery	MD
Notes	
See timing analysis in the scenario description.	

Cognitive Analysis		
Pc Failure Mechanism	**Branch**	**HEP**
Pca: Availability of Information	a	0.00E+00
Pcb: Failure of Attention	h	0.00E+00
Pcc: Misread/miscommunicate data	a	0.00E+00
Pcd: Information misleading	a	0.00E+00
Pce: Skip a step in procedure	c	3.00E-03
Pcf: Misinterpret Instructions	a	0.00E+00
Pcg: Misinterpret decision logic	k	0.00E+00
Pch: Deliberate violation	a	0.00E+00
Initial Pc(without recovery credited)		3.00E-03
Notes		

1AF-FLEX-SGHR-HL, Operator Fails to Align FP to AF cross- connect to feed SG

HEP						
	P_1	**P_2**	**P_{co}**	**P_{ex}**	**Total HEP**	**Error**
Method	CBDTM	HCR/ORE	Maximum	THERP		
HEP	5.02E-04	3.05E-04	5.02E-04	2.88E-02	2.93E-02	5

RAW	**FV**	**Risk Significant**
0.00E+00	0.00E+00	N/A

Identification and Definition

1. Initial conditions: Steady state, full power operation, FP to AF cross-connect is installed and available. To ensure successful implementation of the FP to AF cross-connect during a maintenance condition that reduces the decay heat removal defense in depth (such as an EDG outage), shiftly operator briefings must be performed to ensure operators know that FP to AF cross-connect in Standard Appendix 118 should be tried before concluding that "There are NO other available methods to feed the SGs" per 40AL-9RK5B step 3.4.

2. Initiating event: Loss of All Feedwater (MFW, AFW, Alternate Feedwater).

3. Accident sequence - preceding functional failures and successes: Plant operators fail to align FP to AF cross-connect to feed the SG Makeup within 75 minutes of a loss of all feedwater.

4. Procedural progression: Operators start with Standard Post-Trip Actions to diagnose event. Operators will enter Loss of all Feedwater Procedure 40EP-9EO06, Step 6.1 and Standard Appendix 118 to guide the Operators to align Cross-connect FP to AF.

5. Operator action high level success criteria: Operators successfully feed the SG using the FP to AF cross-connect to provide cooling to at least one SG within 75 minutes following a loss of All feedwater. This HRA assesses the probability of the Operators to mitigate core damage by manually feeding the SG using the FP to AF cross-connect.

6. Timing Analysis:
System Time Window (Tsw):
The system time window is estimated to be 75 minutes from MAAP4.0.7 case pzr1d (Appendix C of 13-NS-B065 Revision 6). This time window represents the time to diagnose loss of all feedwater, attempts to start/align priority systems (FP-AF cross-connect, AFW/AltFW), diagnosis of SG dryout, and feed SG using the FP to AF cross-connect. Tsw = 75 min.

The loss of All Feedwater to SG is already diagnosed and other means of restoration attempted before the decision is made to use the FP to AF cross-connect. However, since Tsw starts with the loss of All Feedwater to SG, the time needed to diagnose

loss of all feedwater and attempt to align another feedwater source must be accounted for with Tdelay.

From HRA 1ALFW-NOMFW---HR (Operators Fail to Depressurize SG and Supply AltFW, No
MFW Available), it would take approximately 41 minutes in the control room to diagnose the cues and initiate action to restore AFW and AltFW. This was assumed as the time needed to identify that the FP to AF cross connect would be used to feed the SG (loss of MFW, AFW, and AltFW). Therefore Tdelay = 41 minutes.

Note: A MAAP4.0.5 run was performed to confirm that SG depressurization occurs quickly so that feed from the 500-psia condensate pump is achievable per HRA 1ALFW-NOMFW---HR. The MAAP4 case included loss of all feedwater and ONE ADV fully open. The pressure in the SG with open ADV decreased to 500 psia in about 10 minutes.

The loss of All Feedwater is already diagnosed and other means of restoration attempted before the decision is made to use the FP to AF cross connect. Assume 1 min for diagnosis based on simulator runs to initiate action to align FP to AF cross-connect (Tcog). Therefore Tcog = 1 minutes

Manipulation Time (Tm):
This is the time required to send an operator to open and close valves to align FP to AF cross- connect using 40EP- 9EO10 Appendix 118, if there is no OTHER means to feed the SG (loss of MFW, AFW, and AltFW). Based on simulator runs, it will take 20 minutes to send an operator to close and open valves, depressurize an SG and to begin feeding the SG using the FP to AF cross-connect. Therefore Tm = 20 minutes.

Cues and Indications	
Initial Cue	Loss of Feed Water Alarm
Recovery Cue	
Cue Comments	Although the evaluation refers to feeding SG1 with Fire Water (Appendix 118-A), it is also applicable to feeding SG2 (Appendix 118-B). Appendix 118-A has the same number of steps/actions as Appendix 118-B. Auxiliary feedwater would be unavailable for one of several reasons, and the Operators would be guided into contingency action in step 6.1 of Loss of all Feedwater procedure (40EP-9EO06 Rev 20) to go to Standard Appendix 118 (40EP-9EO10 Rev 99). SG cooling is high priority following a trip, however, normally operators would probably first attempt to restore AF before aligning Alternate Feedwater. The operators would attempt to align FP to AF cross- connect first before aligning the FLEX mod to recover AF. There are numerous alarms/indications that SGs are drying out. The loss of secondary cooling is available to the Operators by several alarms and indications.
Degree of Clarity	Clarity of Cues and Indications are modeled explicitly in CBDTM

Procedure	
Cognitive Procedure	40EP-9EO06 (Loss of All Feedwater) Revision: 20
Cognitive Step Number	6.1
Cognitive Instruction	Perform the following to establish a low pressure feedwater source: b. IF feeding a Steam Generator with a fire pump is desired, THEN PERFORM Appendix 118, Cross-connect FP to AF.
Execution Procedure	40OP-9EO10 (Standard Appendices) Revision: 99
Execution Instruction	Appendix 118 - Cross-connect FP to AF
Job Performance Measure	JPM: Not Selected
Notes	
Loss of all Feedwater Procedure 40EP-9EO06, Step 6.1 and Standard Appendices procedure	

40EP-9EO10, Appendix 118 guide the Operators to align Cross-connect FP to AF. The operator response procedure is written such that the priority is set on the pumps.

Crew			Requir	
Shift			0	
Shift			1	
STA			0	
Reactor			1	
Plant			1	
Mechanics			0	
Electricians			0	
I&C			0	
Health			0	
Chemistry			0	
Notes				

Timing Analysis

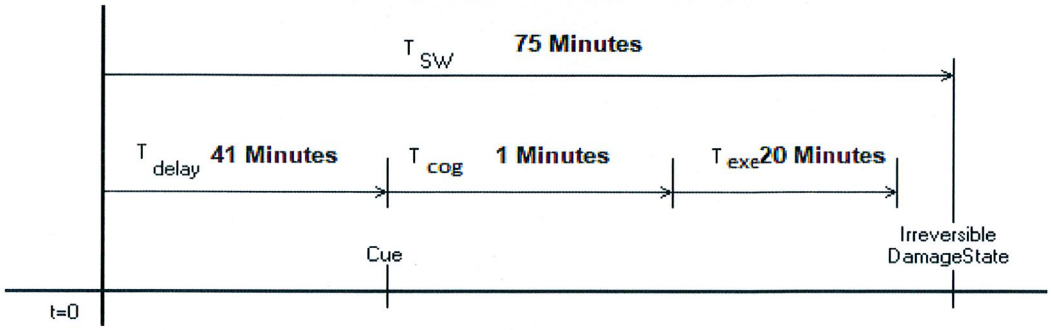

Time available for cognition and	14
Time available for recovery	13
SPAR-H Available time (cognitive)	14
SPAR-H Available time (execution)	1.65
EPRI Minimum level of dependence	HD
Notes	
See scenario description for timing analysis.	

Cognitive Analysis		
Pc Failure Mechanism	**B**	**H**
Pca: Availability of Information	a	n/a
cb: Failure of Attention	a	n/
Pcc: Misread/miscommunicate data	a	n/a
Pcd: Information misleading	a	n/
Pce: Skip a step in procedure	e	2.00E-
Pcf: Misinterpret Instructions	a	n/
Pcg: Misinterpret decision logic	k	n/
Pch: Deliberate violation	a	n

Initial Pc(without recovery credited)	2.0
Notes	

1AF-FLEX-SGHR-HL, Operator Fails to Align FP to AF cross- connect to feed SG

HEP						
	P_1	**P_2**	**P_{co}**	**P_{ex}**	**Total HEP**	**Error**
Method	CBDTM	HCR/ORE	Maximum	THERP		
HEP	5.20E-05	1.37E-06	5.20E-05	3.27E-03	3.32E-03	5

RAW	**FV**	**Risk Significant**
0.00E+00	0.00E+00	N/A

Identification and Definition

1. Initial conditions: Steady state, full power operation, FP to AF cross-connect is installed and available. To ensure successful implementation of the FP to AF cross-connect during a maintenance condition that reduces the decay heat removal defense in depth (such as an EDG outage), shiftly operator briefings must be performed to ensure operators know that FP to AF cross-connect in Standard Appendix 118 should be tried before concluding that "There are NO other available methods to feed the SGs" per 40AL-9RK5B step 3.4.

2. Initiating event: Loss of All Feedwater (MFW, AFW, Alternate Feedwater).

3. Accident sequence - preceding functional failures and successes: Plant operators fail to align FP to AF cross-connect to feed the SG Makeup within 75 minutes of a loss of all feedwater. An additional Auxiliary Operator is assigned to the unit to perform FP to AF cross-connect in parallel to the actions required for MFW, AFW, and Alternate Feedwater.

4. Procedural progression: Operators start with Standard Post-Trip Actions to diagnose event. Operators will enter Loss of all Feedwater Procedure 40EP-9EO06, Step 6.1 and Standard Appendix 118 to guide the Operators to align Cross-connect FP to AF.

5. Operator action high level success criteria: Operators successfully feed the SG using the FP to AF cross-connect to provide cooling to at least one SG within 75 minutes following a loss of All feedwater. This HRA assesses the probability of the Operators to mitigate core damage by manually feeding the SG using the FP to AF cross-connect.

6. Timing Analysis:
System Time Window (Tsw):
The system time window is estimated to be 75 minutes from MAAP4.0.7 case pzr1d (Appendix C of 13-NS-B065 Revision 6). This time window represents the time to diagnose loss of all feedwater, attempts to start/align priority systems (FP-AF cross-connect, AFW/AltFW), diagnosis of SG dryout, and feed SG using the FP to AF cross-connect. Tsw = 75 min.

The loss of All Feedwater to SG is already diagnosed and other means of restoration attempted before the decision is made to use the FP to AF cross-connect. However, since Tsw starts with the loss of All Feedwater to SG, the time needed to diagnose loss of all feedwater and attempt to align another feedwater source must be accounted for with Tdelay.

Based on simulator runs, it takes approximately 18 minutes to diagnose the cues, initiate action to restore AFW, and notify the designated AO to implement Appendix 118. This was assumed as
the time needed to identify that the FP to AF cross connect would be used to feed the SG (loss of
MFW and AFW). Therefore Tdelay = 18 minutes.

Note: A MAAP4.0.5 run was performed to confirm that SG depressurization occurs quickly so that feed from the 500-psia condensate pump is achievable per HRA 1ALFW-NOMFW---HR. The MAAP4 case included loss of all feedwater and ONE ADV fully open. The pressure in the SG with open ADV decreased to 500 psia in about 10 minutes.

The loss of All Feedwater is already diagnosed and other means of restoration attempted before the decision is made to use the FP to AF cross connect. Assume 1 min for diagnosis based on simulator runs to initiate action to align FP to AF cross-connect (Tcog). Therefore Tcog = 1 minutes.

Manipulation Time (Tm):
This is the time required to send an operator to open and close valves to align FP to AF cross- connect using 40EP- 9EO10 Appendix 118, if there is no OTHER means to feed the SG (loss of MFW, AFW, and AltFW). Based on simulator runs, it will take 20 minutes to send an operator to close and open valves, depressurize an SG and to begin feeding the SG using the FP to AF cross-connect. Therefore Tm = 20 minutes.

Cues and Indications	
Initial Cue	Loss of Feed Water Alarm
Recovery Cue	
Cue Comments	Although the evaluation refers to feeding SG1 with Fire Water (Appendix 118-A), it is also applicable to feeding SG2 (Appendix 118-B). Appendix 118-A has the same number of steps/actions as Appendix 118-B. Auxiliary feedwater would be unavailable for one of several reasons, and the Operators would be guided into contingency action in step 6.1 of Loss of all Feedwater procedure (40EP-9EO06 Rev 20) to go to Standard Appendix 118 (40EP-9EO10 Rev 99). SG cooling is high priority following a trip, however, normally operators would probably first attempt to restore AF before aligning Alternate Feedwater. The operators would attempt to align FP to AF cross-connect first before aligning the FLEX mod to recover AF. There are numerous alarms/indications that SGs are drying out. The loss of secondary cooling is available to the Operators by several alarms and indications.
Degree of Clarity	Clarity of Cues and Indications are modeled explicitly in CBDTM

Procedure	
Cognitive Procedure	40EP-9EO06 (Loss of All Feedwater) Revision: 20
Cognitive Step Number	6.1
Cognitive Instruction	Perform the following to establish a low pressure feedwater source: b. IF feeding a Steam Generator with a fire pump is desired, THEN PERFORM Appendix 118, Cross-connect FP to AF.
Execution Procedure	40OP-9EO10 (Standard Appendices) Revision: 99
Execution Instruction	Appendix 118 - Cross-connect FP to AF
Job Performance Measure	JPM: Not Selected
Notes	
Loss of all Feedwater Procedure 40EP-9EO06, Step 6.1 and Standard Appendices procedure	

40EP-9EO10, Appendix 118 guide the Operators to align Cross-connect FP to AF. The operator response procedure is written such that the priority is set on the pumps.

Crew Member	Include	Total	Required for	Notes
Shift Manager	No	1	0	---
Shift Supervisor	Yes	1	1	---
STA	Yes	1	0	---
Reactor operators	Yes	2	1	---
Plant operators	Yes	4	1	---
Mechanics	Yes	2	0	
Electricians	Yes	2	0	
I&C Technicians	Yes	2	0	
Health Physics	Yes	2	0	
Chemistry Technicians	Yes	1	0	
Notes				
Dedicated AO in place to align cross connect				

Timing Analysis

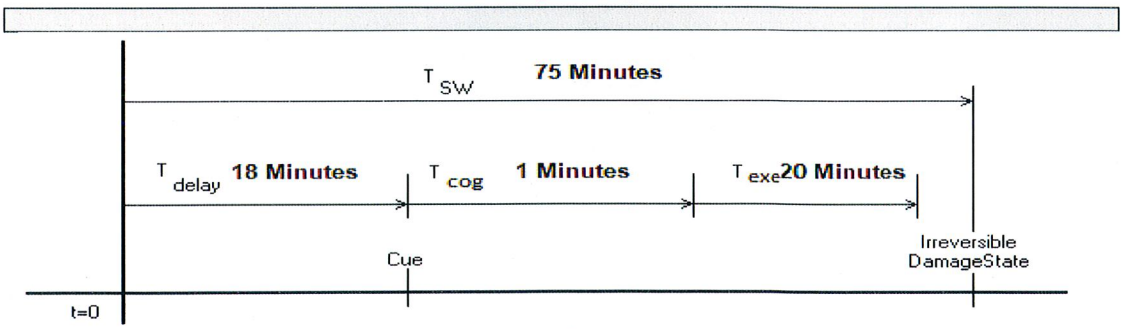

Time available for cognition and recovery	37 Minutes
Time available for recovery	36 Minutes
SPAR-H Available time (cognitive)	37 Minutes
SPAR-H Available time (execution) ratio	2.80 Minutes
EPRI Minimum level of dependence for recovery	LD
Notes	
See scenario description for timing analysis.	

Cognitive		
Pc Failure Mechanism	**Branch**	**HEP**
Pca: Availability of Information	a	n/a
Pcb: Failure of Attention	a	n/a
Pcc: Misread/miscommunicate data	a	n/a
Pcd: Information misleading	a	n/a
Pce: Skip a step in procedure	e	2.00E-03
Pcf: Misinterpret Instructions	a	n/a
Pcg: Misinterpret decision logic	k	n/a
Pch: Deliberate violation	a	n/a

Initial Pc(without recovery credited)	2.00E-03
Notes	

ATTACHMENT 17

Responses to NRC Technical Concerns Regarding Portable Diesel Generators (DGs) from Pre-Submittal Conference Call of December 29, 2016

NRC Portable DG Technical Concern 1:

NRC brought up the need for information regarding the timeline for Operations to energize loads on Train B bus when portable DGs are used.

APS Response to Portable DG Technical Concern 1:

The three portable diesel generator combination will have a total continuous load capability of 4800 kw. It has an ultimate load capacity of 6000 kw that it could sustain for a period of 24 hours which is well in excess of the current load list associated with a LOOP (Loss of Offsite Power). During an event where the B DG is out of service, but where the associated bus is required to be powered by the three paralleled generators, the sequencer will not energize loads as the large loads have had their 86 lockout devices tripped during the FLEX DG start-up procedure. This action allows a controlled re-energization of equipment, based on the crew's needs for event mitigation. Once the 4kv bus is energized, the 480v load centers will be re-energized, to allow re-energization the battery chargers and enabling the starting of additional 480v loads. The loads can be started in any sequence, provided that the interval between motor starts is such that the inrush starting currents are allowed to dissipate between starts . The control room staff would coordinate loading of the FLEX DGs with the dedicated operator stationed at the generators. The local operator monitors voltage, current, and loading of the generator and would communicate these values to the control room operators before and after each large motor start.

The large loads that would be started without delay and in a controlled manner after bus restoration would include:

- Auxiliary Feedwater Pump B (949 kw)
- Essential Spray Pond Pump B and exhaust fan (480 kw)
- Essential Cooling water pump B (543 kw)
  Essential Chiller B and auxiliaries (443 kw)
- Control room essential ventilation B (92 kw)
- Low Pressure Safety Injection pump (418 kw) once shutdown cooling entry conditions have been achieved

Once shutdown cooling is established the B Auxiliary Feedwater Pump could be secured.

ATTACHMENT 17

Responses to NRC Technical Concerns Regarding Portable Diesel Generators (DGs) from Pre-Submittal Conference Call of December 29, 2016

NRC Portable DG Technical Concern 2:

Technical concern expressed the need for information regarding how loads are shared on the portable DGs and how the control systems work for the DGs (droop/isochronous modes).

APS Response to Portable DG Technical Concern 2:

The three electrically paralleled diesel generators each operate in the isochronous mode. Droop mode would only be used if paralleling to an offsite power source, which is not an option for Palo Verde's configuration. The generators operate within a tight frequency control band, utilizing digital frequency and voltage regulation. The specifications, as documented in Palo Verde's SDOC NM1000-A00182 Rev 0 page 18 indicates a frequency regulation of +/- 0.25% from no load to full load. The voltage regulation is +/- .5% from no load to full load. A communications cable connected between the three generators ensures that both real and reactive power is equally shared across each running generator.

ATTACHMENT 18

3B DG Repair and Testing Schedule

Unit 3 B Diesel Generator Repair – 56 days*

12/15/2016 – 02/11/2017

Disassembly and Damage Assessment
12/17/16 – 01/04/17

Block Repair and Line Bore
12/28/16 – 01/24/17

Install Crankshaft and Assembly
01/24/17 – 02/02/17

Retest and Evaluation of Results
02/02/17 – 02/09/17

Contingency
02/09/17 – 02/15/17

*56 days does not include 6 days of contingency

ATTACHMENT 18

3B DG Repair and Testing Schedule

Disassembly and Damage Assessment

Disassembly and damage assessment includes activities that have been completed as well as activities that are still in progress, such as Engineering non-destructive examination of critical parts. Completed activities include initial visual inspection, damage assessment, parts recovery, removal of the generator, flywheel, crankshaft, precision alignment checks of the DG internals, removal of pistons, liners and connecting rods, and removal of instrument panels.

Also included in this portion of the repair was the removal of the exhaust manifold, right and left bank intercoolers from the turbo charger, and removal of the turbo charger. This allowed for line bore measurements and block inspection. A complex rigging platform was designed and fabricated to support these activities. The duration for this portion is scheduled to be 18 days.

Block Repair and Line Bore

Continued repair activities include block repairs, to include machining block mating surfaces, line bore, and foundation check after line bore. Line boring is an engine machining process to establish straight bores for the crankshaft housing. This will ensure the housing and crankshaft are aligned properly. The duration for this portion is scheduled to be 27 days and will be performed in parallel with appropriate activities.

Install Crankshaft and Assembly

Installation of the new crankshaft and reassembly of the diesel engine, generator, and flywheel is scheduled to take approximately 8 days.

Retest and Evaluation of Results

System flushes, startup checks, and retests will take a total of 7 days. Retest of the Unit 3 B diesel will begin with several short maintenance runs which include integral monitoring and inspection activities. An over-speed test will be performed followed by a 24-hour loaded run with a 100 percent load reject and a hot restart.

Finally, isochronous load testing will be performed to verify appropriate voltage and frequency response to sequenced loads. The retest activities are scheduled to take approximately 4.5 days.

Contingency

These activities reflect a 56 day repair duration, with some activities performed in parallel. The requested required action completion time extension reflects 6 additional days for contingency to address unknowns.