April Rice
Manager
New Nuclear Licensing

December 21, 2016
NND-16-0554
10 CFR 50.90
10 CFR 52.63

U.S. Nuclear Regulatory Commission
Attn: Document Control Desk
Washington, DC 20555-0001

Virgil C. Summer Nuclear Station (VCSNS) Units 2 and 3
Docket Numbers 52-027 and 52-028
Combined License Numbers NPF-93 and NPF-94

Subject: Request for License Amendment and Exemption: Ventilation System Changes (LAR 13-30)

Reference: Southern Nuclear Operating Company Vogtle Electric Generating Plant Units 3 and 4 Request for License Amendment and Exemption: Ventilation System Changes (LAR-16-030), ND-16-2452, dated December 9, 2016

Pursuant to 10 CFR 52.98(c) and in accordance with 10 CFR 50.90, South Carolina Electric & Gas Company (SCE&G), acting on behalf of itself and the South Carolina Public Service Authority (Santee Cooper), the licensees for Virgil C. Summer Nuclear Station (VCSNS) Units 2 and 3, requests an amendment to Combined License (COL) Numbers NPF-93 and NPF-94, for VCSNS Units 2 and 3, respectively. The requested amendment requires changes to the Updated Final Safety Analysis Report (UFSAR) in the form of departures from the incorporated plant-specific Design Control Document (PS-DCD) Tier 2 information and involves related changes to COL Appendix C information, with corresponding changes to the associated plant-specific Tier 1 information. Pursuant to the provisions of 10 CFR 52.63(b)(1), an exemption from elements of the design as certified in the 10 CFR Part 52, Appendix D, design certification rule is also requested for the plant-specific DCD Tier 1 material departures.

The proposed departures consist of changes to plant-specific Tier 1 (and COL Appendix C) Tables 2.7.5-1, 2.7.5-2, and 2.7.7-3 and associated UFSAR text, tables, and figures related to:

1) Modifying the configuration of the containment recirculation fan coil unit assemblies of the containment recirculation cooling system (VCS), and revising the values for the various design parameters affected by this re-configuration,
2) Adding a fourth pressure differential indicator to the radiologically controlled area ventilation system (VAS) to be located in the auxiliary building component cooling system valve room, and
3) Reducing the total ventilation flow provided through the VAS fuel handling area ventilation subsystem as a result of a reduction in heat loads in the areas serviced by the VAS.

Enclosure 1 provides the description, technical evaluation, regulatory evaluation (including the Significant Hazards Consideration determination), and environmental considerations for the proposed changes in the License Amendment Request (LAR).

Enclosure 2 provides the background and supporting basis for the requested exemption.

Enclosure 3 identifies the requested changes and provides markups depicting the requested changes to the affected licensing basis documents.

The requested amendment and exemption are identical in content to Southern Nuclear Operating Company's LAR, dated December 9, 2016 (Reference 1).

This letter contains no regulatory commitments. This letter has been reviewed and confirmed to not contain security-related information.

SCE&G requests staff approval of the license amendment by June 27, 2017. SCE&G expects to implement the proposed amendment within 30 days of approval of the requested changes. SNC has stated in Reference 1 that their requested approval date is May 17, 2017.

In accordance with 10 CFR 50.91, SCE&G is notifying the State of South Carolina of this LAR by transmitting a copy of this letter and enclosures to the designated State Official.

Should you have any questions, please contact Nick Kellenberger by telephone at (803) 941-9834, or by email at nicholas.kellenberger@scana.com.

I declare under penalty of perjury that the foregoing is true and correct.

Executed on this 21st day of December, 2016.

Sincerely,

April Rice
Manager
New Nuclear Licensing

BB/ARR/bb

Enclosures:
1) Virgil C. Summer Nuclear Station (VCSNS) Units 2 and 3 – Request for License Amendment Regarding Ventilation System Changes (LAR 13-30)
2) Virgil C. Summer Nuclear Station (VCSNS) Units 2 and 3 – Exemption Request: Ventilation System Changes (LAR 13-30)
3) Virgil C. Summer Nuclear Station (VCSNS) Units 2 and 3 – Proposed Changes to the Licensing Basis Documents (LAR 13-30)

cc:

Billy Gleaves
Ruth Reyes
Chandu Patel
Paul Kallan
Tom Fredette
Tomy Nazario
Catherine Haney
Jim Reece
Stephen A. Byrne
Jeffrey B. Archie
Ronald A. Jones
Alvis J. Bynum
Kathryn M. Sutton
April Rice
Nick Kellenberger
Matt Kunkle
Mory Diane
Bryan Barwick
Dean Kersey
Margaret Felkel
Cynthia Lanier
Lisa Spears
Frederick Willis
Neil Haggerty
Pat Young
Zach Harper
Brian McIntyre
Brian Bedford
Carl Churchman
Joseph Cole
Chuck Baucom
Lisa Alberghini
Curt Castell
Jeff Hawkins
Susan E. Jenkins
William M. Cherry
Rhonda O'Banion
VCSummerMail@westinghouse.com
vcsummer2&3project@westinghouse.com
DCRM-EDMS@SCANA.COM
VCSNNDCorrespondence@scana.com

South Carolina Electric & Gas Company

NND-16-0554

Enclosure 1

Virgil C. Summer Nuclear Station (VCSNS) Units 2 and 3

Request for License Amendment Regarding

Ventilation System Changes

(LAR 13-30)

(This Enclosure consists of 17 pages, including this cover page.)

Table of Contents

Pursuant to 10 CFR 52.98(c) and in accordance with 10 CFR 50.90, South Carolina Electric & Gas Company (SCE&G), acting on behalf of itself and the South Carolina Public Service Authority (Santee Cooper), hereby requests an amendment to Combined License (COL) Nos. NPF-93 and NPF-94 for Virgil C. Summer Nuclear Station (VCSNS) Units 2 and 3, respectively.

1. SUMMARY DESCRIPTION

The proposed changes revise the Combined Licenses (COLs) concerning the design details of the containment recirculation cooling system (VCS) and radiologically controlled area ventilation system (VAS). These proposed changes include the following:

A. The design of the VCS as described in Revision 19 of the AP1000 Design Control Document (DCD) was based upon the approved design of the VCS for the Westinghouse AP600 plant. However, final design of the VCS has resulted in proposed changes to the layout and sizing of the containment recirculation fan coil unit assemblies and associated ductwork, and changes to the total required design air flow rates and total design cooling and heating requirements. This includes proposed changes to the nominal design values for normal and low speed air flow rates, cooling capacity, chilled water flow rate, heating capacity, hot water flow rate, and supply air temperature for normal power operation for the containment recirculation fan coil unit assemblies.

B. A change is proposed to add a fourth VAS pressure differential instrument, numbered as VAS-033, providing indication, control, and alarm functions for the auxiliary building component cooling water system (CCS) valve room (Room 12561) while the exhaust flow path is aligned to the containment air filtration system (VFS) filtered exhaust. This provides pressure differential monitoring and control for the auxiliary building CCS valve room, which is an area of the auxiliary building that is physically remote and separate from the currently monitored and controlled areas. The existing pressure differential instrument VAS-033 for the auxiliary building middle annulus is renumbered as VAS-034.

C. Based on final calculations of heat loads in the areas serviced by the VAS, the required cooling airflows for the VAS are changed. This results in proposed changes to the required VAS supply air flow rate and total ventilation flow provided through the auxiliary building fuel handling area.

The requested amendment requires changes to the UFSAR in the form of departures from the plant-specific Design Control Document (DCD) Tier 2 information (as detailed in Section 2), and involves changes to related COL Appendix C information, with corresponding changes to the associated plant-specific Tier 1 information. This enclosure requests approval of the license amendment necessary to implement the Tier 2 and COL Appendix C changes. Enclosure 2 requests the exemption necessary to implement the involved changes to the plant-specific DCD Tier 1 information.

2. DETAILED DESCRIPTION and TECHNICAL EVALUATION

A. Change to Configuration of the Containment Recirculation Fan Coil Unit Assemblies

The design of the VCS, as described in Revision 19 of the AP1000 DCD, was based upon the approved design of the VCS for the Westinghouse AP600 plant. However, final design of

the VCS has resulted in changes to the layout and sizing of the containment recirculation fan coil unit assemblies and associated ductwork, and changes to the total required design air flow rates and total design cooling and heating requirements. Therefore, the VCS design as described in UFSAR Subsections 1.2.4.1, 9.4.6.2.1, 9.4.6.2.2, and 9.4.6.2.3, Table 9.4.6-1, and Figures 9.2.7-1 (Sheet 3) and 9.4.6-1, is proposed to be changed to modify the configuration of the containment recirculation fan coil unit assemblies. This involves a change to COL Appendix C (and plant-specific DCD Tier 1) Table 2.7.7-3 to add the two new containment recirculation fan coil unit assemblies (VCS-MS-01C and VCS-MS-01D).

The current design includes two containment recirculation fan coil unit assemblies with two fans each, with a divider plate between the two fans and two coils each on the north and south ends and four coils each on the east and west ends of each assembly plenum. The proposed design includes four separate containment recirculation fan coil unit assemblies with separate plenums, each with one fan with two cooling coils placed on each of the four sides of each assembly plenum. By using four separate containment recirculation fan coil unit assemblies with cooling coils on all four sides of each assembly plenum, the cooling surface area is increased without a significant increase in height. The configuration of the containment recirculation fan coil unit assemblies is modified to address changes in total required design air flow rates and total design cooling and heating requirements as a result of the final design of the VCS. This includes proposed changes to the nominal design values for normal and low speed air flow rates, cooling capacity, chilled water flow rate, heating capacity, hot water flow rate, and supply air temperature for normal power operation for the containment recirculation fan coil unit assemblies.

<u>Licensing Basis Changes for Change to Configuration of the Containment Recirculation Fan Coil Unit Assemblies</u>

The following licensing basis changes are proposed to address the change to the configuration of the containment recirculation fan coil unit assemblies:

1. COL Appendix C (and plant-specific DCD Tier 1) is revised as follows:

    a) Table 2.7.7-3 is revised to add the two new containment recirculation fan coil unit assemblies (VCS-MS-01C and VCS-MS-01D).

2. The UFSAR is revised as follows:

    a) Tier 2 Subsections 1.2.4.1, 9.4.6.2.1, 9.4.6.2.2, and 9.4.6.2.3 are revised to change the number, location, and configuration of the containment recirculation fan coil unit assemblies, including the consistent use of the terms “fan coil unit assemblies” and “fans” where appropriate.

    b) Tier 2 Figure 9.2.7-1 (Sheet 3) is revised to add the two new containment recirculation fan coil unit assemblies (VCS-MS-01C and VCS-MS-01D) to the units served by the central chilled water system (VWS), and alternately by the hot water heating system (VYS).

    c) Tier 2 Subsection 9.4.6.2.3 is revised to change the nominal design value for supply air temperature provided by the fan coil unit assemblies during normal power

operation from 60°F to 70°F, consistent with supply air temperature used for the design finalization of the VCS and VWS.

d) Table 9.4.6-1 is revised to change the number and capacity of the containment recirculation fan coil unit assemblies, and to change nominal design values for the fans and coils per containment recirculation fan coil unit assembly. Additional editorial clarifications are provided to the title of the table, and to use consistent terminology including “fan coil unit assemblies” and “fans” where appropriate.

e) Figure 9.4.6-1 is revised to change the number and configuration of the containment recirculation fan coil unit assemblies.

Technical Evaluation of Change to Configuration of the Containment Recirculation Fan Coil Unit Assemblies

As described in UFSAR Subsection 9.4.6, the nonsafety-related VCS functions to control air temperature and reduce humidity in the containment to provide a suitable environment for equipment operability during normal power operation, and for personnel accessibility and equipment operability during refueling and shutdown. The VCS also functions to maintain a homogeneous containment temperature and pressure during a containment integrated leak rate test (ILRT), and during and after a loss of plant alternating current (ac) if standby onsite ac power capacity is available, and to control the reactor cavity area average concrete temperature to less than prescribed limits. System equipment and ductwork whose failure could affect the operability of safety-related systems or components are designed to seismic Category II requirements. The remaining portion of the system is non-seismic. The VCS has no safety-related function.

The proposed changes do not adversely affect the design functions of the VCS described above. The proposed changes address the changes in total required design air flow rates and total design cooling and heating requirements as a result of the final design of the VCS, such that the design functions of the VCS are met. The change from two containment recirculation fan coil unit assemblies with 12 coils and two fans each with a common plenum with a divider plate between the two fans, to four containment recirculation fan coil unit assemblies with eight coils and one fan each with separate plenums, increases the air flow rate and cooling and heating surface area available for each containment recirculation fan coil unit to achieve the required cooling and heating capacity. In the proposed change, each of the four containment recirculation fan coil unit assemblies (which includes a single fan each) provides 50% capacity, which is the same as the current design in which each of the two containment recirculation fan coil unit assemblies (which includes two fans each) were specified as 100% capacity.

The proposed changes to the nominal design values for normal and low speed air flow rates for the VCS fans are acceptable, as the proposed containment recirculation fan coil unit assemblies are designed and tested to operate within the normal operating containment pressures as well as the higher containment pressures during a containment ILRT. The normal air flow rate for the VCS fans is based on the revised total design cooling and heating requirements during normal power operations at full power, as are the revised cooling capacity, chilled water flow rate, heating capacity, and hot water flow rate requirements for the containment recirculation fan coil unit assemblies. Therefore, the

proposed changes to the normal design values for cooling and heating capability for the proposed containment recirculation fan coil unit assemblies are acceptable. The low speed air flow rate is acceptable, as the containment air density is considerably higher during the performance of a containment ILRT. The existing cable penetration and associated cable tray layouts inside containment remain the same, as the power rating for the proposed VCS fans for both normal speed at normal operating containment pressure and low speed at the higher containment pressures during a containment ILRT remain within the design capability of the electrical power design.

With the increase in supply air temperature provided by the fan coil unit assemblies during normal power operation from 60°F to 70°F, the VCS continues to control air temperature and reduce humidity in the containment to provide a suitable environment for equipment operability during normal power operation. With the increase in normal supply air temperature, the VCS continues to function to control the reactor cavity area average concrete temperature to less than prescribed limits. The use of a supply air temperature of 70°F during normal power operation maintains the containment bulk area temperature under 120°F, the reactor cavity and nozzle gallery temperature under 135°F, and reactor cavity concrete temperature well below 150°F. In addition, established containment air room temperatures remain unchanged.

The VCS continues to meet the requirements during refueling and shutdown of controlling average bulk air temperature between 50°F and 70°F. In addition, the VCS continues to function to maintain a homogeneous containment temperature and pressure during a containment ILRT, and during and after a loss of the plant ac if standby onsite ac power capacity is available.

The proposed design of the four new separate containment recirculation fan coil unit assemblies continues to comply with the same codes and standards and materials of construction as the current design of the containment recirculation fan coil unit assemblies. The containment recirculation fan coil unit assemblies are modularized to minimize physical constraints, lower fabrication costs, facilitate installation and limit interface points. Each containment recirculation fan coil unit assembly is of industrial type, rugged construction, factory assembled, and skid-mounted in a one-piece package.

The containment recirculation fan coil unit assemblies are designed, fabricated, and tested to meet the requirements of various design standards. The cooling coils are rated in accordance with American National Standards Institute (ANSI)/Air Conditioning and Refrigeration Institute (ARI) 410-1991, Forced-Circulation Air-Cooling and Air-Heating Coils. The fans are designed and rated to standard air conditions in accordance with ANSI/Air Movement and Control Association (AMCA) 210-2007, Laboratory Method of Testing Fans for Aerodynamic Rating Purposes, ANSI/AMCA 211-2013, Certified Ratings Program – Product Rating Manual for Fan Air Performance, and ANSI/AMCA 300-2014, Reverberant Room Methods for Sound Testing of Fans.

B. Addition of Fourth VAS Pressure Differential Instrument

The VAS design as described in UFSAR Subsection 9.4.3.5 is proposed to be changed to add a fourth VAS pressure differential instrument, identified as VAS-033, to provide indication, control, and alarm functions for the auxiliary building component cooling water

system (CCS) valve room (Room 12561) while the exhaust flow path is aligned to the VFS filtered exhaust. The auxiliary building CCS valve room is an area of the auxiliary building that is physically remote and separate from the currently monitored and controlled areas. The proposed change enables pressure differential monitoring and control for the CCS valve room, consistent with changes to the design calculations supporting final design development of the VAS. The existing pressure differential instrument VAS-033 for the auxiliary building middle annulus is proposed to be renumbered as VAS-034. This involves a change to COL Appendix C (and plant-specific DCD Tier 1) Table 2.7.5-1 to add VAS-034 for the auxiliary building as the last row of the table, and to move existing VAS-030 for the fuel handling area to the first row of the table as an editorial change.

Licensing Basis Changes for Addition of Fourth VAS Pressure Differential Instrument

The following licensing basis changes are proposed to address the changes to add the fourth VAS pressure differential instrument, numbered as VAS-033, for the auxiliary building CCS valve room and to renumber the existing pressure differential instrument VAS-033 for the auxiliary building middle annulus as VAS-034:

1. COL Appendix C (and plant-specific DCD Tier 1) is revised as follows:

    a) Table 2.7.5-1 is revised to add VAS-034 for the auxiliary building as the last row of the table, and to move existing VAS-030 for the fuel handling area to the first row of the table as an editorial change.

2. The UFSAR is revised as follows:

    a) Subsection 9.4.3.5 is revised to add VAS-034, and to add the fuel handling area of the auxiliary building to the list of radiologically controlled areas maintained at a negative pressure by the VAS.

Technical Evaluation of Addition of Fourth VAS Pressure Differential Instrument

As described in UFSAR Subsection 9.4.3, the VAS provides ventilation for the fuel handling area of the auxiliary building, and the radiologically controlled portions of the auxiliary and annex buildings, except for the health physics and hot machine shop areas, which are provided with a separate ventilation system, the health physics and hot machine shop heating, ventilation, and air-conditioning (HVAC) system (VHS). The VAS consists of the auxiliary/annex building ventilation subsystem and the fuel handling area ventilation subsystem. These subsystems provide ventilation to maintain occupied areas and access and equipment areas within their design temperature range, provide outside air for plant personnel, and prevent the unmonitored release of airborne radioactivity to the atmosphere or adjacent plant areas, by maintaining a negative pressure differential relative to the outside atmosphere and non-radiologically controlled areas in the areas serviced. As described in UFSAR Subsection 9.4.3.1.2, the VAS automatically isolates selected building areas by closing the supply and exhaust duct isolation dampers and starts the containment air filtration system (VFS) when high airborne radioactivity in the exhaust air duct or high positive pressure differential relative to the outside atmosphere and non-radiologically controlled areas is detected. The VAS has no safety-related function.

The proposed changes add the fourth VAS pressure differential instrument, identified as VAS-033, to provide indication, control, and alarm functions for the auxiliary building CCS valve room, and to renumber the existing pressure differential instrument VAS-033 for the auxiliary building middle annulus as VAS-034. These proposed changes do not adversely affect the design functions of the VAS as described above. The proposed changes enable pressure differential monitoring and control for the auxiliary building CCS valve room, which is an area of the auxiliary building that is physically remote and separate from the currently monitored and controlled areas. This provides prevention of the unmonitored release of airborne radioactivity to the atmosphere or adjacent plant areas, by maintaining a negative pressure differential for the auxiliary building CCS valve room relative to the outside atmosphere and non-radiologically controlled areas. The changes to COL Appendix C (and plant-specific DCD Tier 1) Table 2.7.5-1 to add VAS-034 for the auxiliary building as the last row of the table, and to move existing VAS-030 for the fuel handling area to the first row of the table as an editorial change, are consistent with these changes.

C. Changes in VAS Fuel Handling Area Ventilation Subsystem Ventilation Flow Rates

The VAS design as described in UFSAR Subsection 9.4.3.2.1.2 and UFSAR Table 12.2-24 is proposed to be modified to change the total ventilation flow rates provided by the fuel handling area ventilation subsystem as a result of the reduction in heat loads in the areas serviced by the VAS. To maintain the required capacity of the central chilled water system (VWS) at the current design values (i.e., maintaining heat loads in the areas serviced below the capability of the VWS 1700-ton water cooled chiller and 300-ton air cooled chiller), manufacturer's equipment data, rather than previous conservative estimates for heat loads in the areas serviced by the VAS, are used for determining required air conditioning tonnage. These changes are the result of optimizing the VWS and VAS electrical power and functional performance requirements, while minimizing changes to the required capacity of the VWS. As a result, changes to the required cooling ventilation flow rates for the VAS are made, including a decrease in the ventilation flow rate through each of the two supply air handling units of the fuel handling area ventilation subsystem to 4,900 scfm, and resulting decreases in the total ventilation flow rate through the auxiliary building fuel handling and rail car bay/solid radwaste system areas to 11,450 cfm and ventilation flow rate through the fuel handling area to 9,000 cfm. This involves a change to the ventilation flow rate in COL Appendix C (and plant-specific DCD Tier 1) ITAAC Table 2.7.5-2, ITAAC No. 2.7.05.02.ii), to 10,300 cfm, which is 90% of the 11,450 cfm total ventilation flow rate through the auxiliary building fuel handling and rail car bay/solid radwaste system areas necessary to maintain the auxiliary building fuel handling area at a negative pressure differential relative to the outside atmosphere and non-radiologically controlled areas. This is consistent with the existing margin in the current licensing basis. Additionally, the description of the test required by ITAAC Table 2.7.5-2, ITAAC No. 2.7.05.02.ii is revised to clarify that the ventilation flow rate test measures flow through the rail car bay/solid radwaste system area, as well as the currently required fuel handling area, to conform with the UFSAR Subsection 9.4.3.2.1.2 description of the plant areas served by the VAS fuel handling area subsystem.

Licensing Basis Changes for Changes in VAS Fuel Handling Area Ventilation Subsystem Ventilation Flow Rates

The following licensing basis changes are proposed to address the modifications to the VAS to change the VAS fuel handling area ventilation subsystem ventilation flow rates:

1. COL Appendix C (and plant-specific DCD Tier 1) is revised as follows:

   a) Inspections, Tests, Analyses and Acceptance Criteria (ITAAC) Table 2.7.5-2, ITAAC No. 2.7.05.02.ii), is revised to clarify that the rail car bay/solid radwaste system area is included in the scope of the ventilation flow rate test and change the total ventilation flow rate through the auxiliary building fuel handling and rail car bay/solid radwaste system areas to 10,300 cfm.

2. The UFSAR is revised as follows:

   a) Subsection 9.4.3.2.1.2 is revised to change the ventilation flow rate through each of the two supply air handling units of the fuel handling area ventilation subsystem to 4,900 scfm.

   b) Table 12.2-24 is revised to change the ventilation flow rate through the auxiliary building fuel handling area to 9,000 cfm consistent with Note 1.

<u>Technical Evaluation of Changes in VAS Fuel Handling Area Ventilation Subsystem Ventilation Flow Rates</u>

As described in UFSAR Subsection 9.4.3, the VAS provides ventilation for the fuel handling area of the auxiliary building, and the radiologically controlled portions of the auxiliary and annex buildings, except for the health physics and hot machine shop areas, which are provided with a separate ventilation system (VHS). The VAS consists of the auxiliary/annex building ventilation subsystem and the fuel handling area ventilation subsystem. These subsystems provide ventilation to maintain occupied areas and access and equipment areas within their design temperature range, provide outside air for plant personnel, and prevent the unmonitored release of airborne radioactivity to the atmosphere or adjacent plant areas, by maintaining a negative pressure differential relative to the outside atmosphere and non-radiologically controlled areas in the areas serviced. Hot water heating coils supplied with water from the hot water heating system (VYS) and cooling coils supplied with water from the VWS are used to maintain ambient room temperatures within the normal range. As described in UFSAR Subsection 9.4.3.1.2, the VAS automatically isolates selected building areas by closing the supply and exhaust duct isolation dampers and starts the containment air filtration system (VFS) when high airborne radioactivity in the exhaust air duct or high positive pressure differential relative to the outside atmosphere and non-radiologically controlled areas is detected. The VAS has no safety-related function.

As described in UFSAR Subsection 9.4.3.2.1.2, the fuel handling area ventilation subsystem serves the fuel handling area, rail car bay/filter storage, and other plant areas in which fuel and radioactive waste are stored or transferred. The supply air handling units discharge into a ducted supply distribution system, which is routed to the fuel handling and rail car bay/filter storage areas of the auxiliary building. Therefore, inclusion of the rail car bay/solid radwaste system area in the scope of this ITAAC ventilation flow rate test is consistent with the subsystem design, as described in UFSAR Subsection 9.4.3.2.1.2, and provides a more comprehensive description of the test performed to verify the ability of the VAS to maintain the areas served by this subsystem at a slightly negative pressure relative to the atmosphere or adjacent clean plant areas.

The proposed modifications to reduce the VAS fuel handling area ventilation subsystem total ventilation flow rate through the auxiliary building fuel handling and rail car bay/solid radwaste system areas to 11,450 cfm does not adversely affect the design functions of the VAS to maintain occupied areas and access and equipment areas within their design temperature range, and to provide outside air for plant personnel. The change in ventilation flow rate through each of the two supply air handling units of the fuel handling area ventilation subsystem to 4,900 scfm, and resulting decreases in the total ventilation flow rate through the auxiliary building fuel handling and rail car bay/solid radwaste system areas to 11,450 cfm and ventilation flow rate through the fuel handling area to 9,000 cfm, continues to maintain environmental conditions that support worker efficiency during fuel handling operations. The design condition of 90°F dry bulb/75°F wet bulb satisfies the maximum wet bulb globe temperature of 80°F (96°F dry bulb) as described in UFSAR Subsection 9.4.3.2.1.2. The capability of the supply and exhaust duct isolation dampers to close when high airborne radioactivity in the exhaust air or high positive pressure differential relative to the outside atmosphere and non-radiologically controlled areas is detected is not affected. The change to the total ventilation flow provided through the auxiliary building fuel handling and rail car bay/solid radwaste system areas in COL Appendix C (and plant-specific DCD Tier 1) ITAAC Table 2.7.5-2, ITAAC No. 2.7.05.02.ii), to 10,300 cfm is consistent with the previously certified value identified as 90% of the nominal design ventilation flow rate through the auxiliary building fuel handling and rail car bay/solid radwaste system areas. The airborne radioactivity concentration in the fuel handling area has been calculated using the lower ventilation flow rate through the auxiliary building fuel handling area and remains acceptable.

Technical Evaluation of Other Impacts

An impact review determined that these proposed changes do not affect or require any change to the AP1000 PRA presented in UFSAR Chapter 19, including the Fire PRA, results and insights (e.g., core damage frequency (CDF) and large release frequency (LRF)). There are no existing failures of the VCS or VAS included in the PRA model, and no new postulated failures of the VCS or VAS are required in the PRA model. Therefore, there are no changes required to initiating event frequencies and system logic models of the PRA. The existing PRA risk significance investment protection determination for VCS and VAS is not affected. The systems, structures, and components (SSCs) affected by these proposed changes are not identified as risk-significant within the scope of the Design Reliability Assurance Program (D-RAP) in UFSAR Table 17.4-1.

No fire area changes are required because of these proposed changes. No combustible materials are added by the proposed changes, and no fire area boundaries are changed. The affected VCS and VAS SSCs are not modified such that fire barriers, including walls, floors, or other structures, and fire dampers for the associated ventilation systems, are changed.

There are no radiation zone changes required because of these proposed changes. The changes to VCS and VAS SSCs do not introduce new or different amounts or types of radioactive materials, nor do they involve changes to radiation zone boundaries, including walls, floors, or other structures that provide shielding features. The proposed modifications to reduce the VAS fuel handling area ventilation subsystem ventilation flow rates do not adversely affect the calculated airborne radioactivity concentrations in the fuel handling

area, which conservatively use a 10% lower ventilation flow rate than the expected ventilation flow rate. Therefore, there are no changes to the controls required under 10 CFR Part 20 that preclude a significant increase in occupational radiation exposure.

The proposed changes do not affect the containment, control, channeling, monitoring, processing or releasing of radioactive or non-radioactive materials. The proposed changes to the VCS to modify the configuration of the containment recirculation fan coil unit assemblies, and to revise nominal design values for the containment recirculation fan coil unit assemblies cooling and heating requirements, do not adversely affect the containment and control of radioactive and non-radioactive materials inside containment, nor do they adversely affect the containment boundary. The proposed changes to add the fourth VAS pressure differential instrument, numbered as VAS-033, providing indication, control, and alarm functions for the auxiliary building CCS valve room, and to renumber the existing pressure differential instrument VAS-033 for the auxiliary building middle annulus as VAS-034, do not adversely affect the design functions of the VAS to prevent the unmonitored release of airborne radioactivity to the atmosphere or adjacent plant areas, by maintaining a negative pressure differential relative to the outside atmosphere and non-radiologically controlled areas in the areas serviced. The proposed modifications to reduce the VAS fuel handling area ventilation subsystem ventilation flow rates do not adversely affect the capability of the supply and exhaust duct isolation dampers to close when high airborne radioactivity in the exhaust air or high positive pressure differential relative to the outside atmosphere and non-radiologically controlled areas is detected. Accordingly, no effluent release path is affected. In addition, the types and quantities of expected effluents are not changed by the proposed changes. Therefore, the proposed change does not affect radioactive or non-radioactive material effluents.

Summary

The proposed changes to revise UFSAR information, and involved changes to COL Appendix C (and plant-specific DCD Tier 1) information concerning detailed design of the VCS and VAS do not adversely affect the design functions of the VCS or VAS.

The proposed changes for the VCS address changes in total required design air flow rates and total design cooling and heating requirements as a result of the final design of the VCS. These proposed changes are acceptable because the design functions of the VCS to control air temperature and reduce humidity in the containment, thereby providing a suitable environment for equipment operability during normal power operation and for personnel accessibility and equipment operability during refueling and shutdown, continue to be met.

The proposed change to add the fourth VAS pressure differential instrument, numbered as VAS-033, enables pressure differential indication, control, and alarm functions for the auxiliary building CCS valve room, which is an area of the auxiliary building that is physically remote and separate from the currently monitored and controlled areas. This proposed change is acceptable because the design function of the VAS to prevent the unmonitored release of airborne radioactivity to the atmosphere or adjacent plant areas by maintaining a negative pressure differential in radiologically controlled areas relative to the outside atmosphere and non-radiologically controlled areas continues to be met.

In addition, the proposed changes to reduce the VAS fuel handling area ventilation subsystem ventilation flow rates continue to provide adequate ventilation for the fuel handling area. This proposed change is acceptable because the design functions of the VAS to maintain occupied areas and access and equipment areas within their design temperature range, and to provide outside air for plant personnel, continue to be met. This includes maintaining environmental conditions that support worker efficiency during fuel handling operations as described in UFSAR Subsection 9.4.3.2.1.2. In addition, the capability of the supply and exhaust duct isolation dampers to close when high airborne radioactivity in the exhaust air or high positive pressure differential relative to the outside atmosphere and non-radiologically controlled areas is detected is not affected.

The proposed changes do not adversely affect any safety-related equipment or function, design function, radioactive material barrier, or safety analysis.

3. TECHNICAL EVALUATION (Included in Section 2)

4. REGULATORY EVALUATION

4.1 Applicable Regulatory Requirements/Criteria

10 CFR 52.98(f) requires NRC approval for any modification to, addition to, or deletion from the terms and conditions of a Combined License (COL). The proposed changes involve a change to COL Appendix C Inspections, Tests, Analyses and Acceptance Criteria (ITAAC) information, with corresponding changes to the associated plant specific Design Control Document (DCD) Tier 1 information. Therefore, NRC approval is required prior to making the plant specific proposed changes in this license amendment request.

10 CFR Part 52, Appendix D, Section VIII.B.5.a allows an applicant or licensee who references this appendix to depart from Tier 2 information, without prior NRC approval, unless the proposed departure involves a change to, or departure from, Tier 1 information, Tier 2* information, or the Technical Specifications, or requires a license amendment under paragraphs B.5.b or B.5.c of the section. The proposed changes for the VCS, which include changes to UFSAR Subsections 1.2.4.1, 9.4.6.2.1, 9.4.6.2.2, and 9.4.6.2.3; UFSAR Figure 9.2.7-1 (Sheet 3); UFSAR Table 9.4.6-1; and UFSAR Figure 9.4.6-1, involve a revision to COL Appendix C (and plant-specific DCD Tier 1) Table 2.7.7-3 information. The proposed changes for the VAS, which include changes to UFSAR Subsection 9.4.3.5, involve a revision to COL Appendix C (and plant-specific DCD Tier 1) Table 2.7.5-1 information. The proposed changes for the VAS, which include changes to UFSAR Subsection 9.4.3.2.1.2 and UFSAR Table 12.2-24, involve a revision to COL Appendix C (and plant-specific DCD Tier 1) ITAAC Table 2.7.5-2, ITAAC No. 2.7.05.02.ii), information. Therefore, NRC approval is required for the Tier 2 and involved Tier 1 departures.

10 CFR Part 50, Appendix A, General Design Criterion (GDC) 2 requires that structures, systems and components important to safety be designed to withstand the effects of natural phenomena, such as earthquakes. The proposed changes to the VCS are designed to the existing requirements requiring system equipment and ductwork whose failure could affect

the operability of safety-related systems or components to be designed to seismic Category II requirements, while the remaining portion of the system remains non-seismic. The proposed changes to the VAS to provide additional pressure differential monitoring and control are designed to the existing seismic design requirements. The proposed changes to the required VAS supply air flow rate and total ventilation flow provided through the auxiliary building fuel handling area do not involve physical modifications or addition of systems, structures, and components, and do not impact the existing seismic design requirements. Therefore, the proposed changes comply with the requirements of GDC 2.

10 CFR Part 50, Appendix A, GDC 4 requires that systems structures and components can withstand the dynamic effects associated with missiles, pipe whipping, and discharging fluids, excluding dynamic effects associated with pipe ruptures, the probability of which is extremely low under conditions consistent with the design basis for the piping. The proposed changes to the VCS and VAS do not adversely affect the configuration of the walls and floors that provide separation between sources and potential targets. The proposed changes have no effect on the capability of the systems, structures, and components to withstand dynamic effects associated with missiles, pipe whipping, and discharging fluids as required by this criterion. The proposed changes do not change the requirements for anchoring safety-related components and supports to seismic Category I structures. Therefore, the proposed changes comply with the requirements of GDC 4.

10 CFR Part 50, Appendix A, GDC 17 requires that an onsite electric power system and an offsite electric power system be provided to permit functioning of structures, systems, and components important to safety. The proposed changes to the VCS and VAS are within the capability of the existing onsite electric power system and offsite electric power system. For the change that reconfigures the containment recirculation fan coil unit assemblies, the electrical load requirements are considered in the sizing of the onsite standby diesel generators and offsite electric power system. The proposed change to the VAS to provide additional pressure differential monitoring and control does not impact the electric power systems. The proposed changes to the required VAS supply air flow rate and total ventilation flow provided through the auxiliary building fuel handling area result in a change in electrical load requirements, but are also considered in the sizing of the onsite standby diesel generators and offsite electric power system. Therefore, the proposed changes comply with the requirements of GDC 17.

10 CFR Part 50, Appendix A, GDC 60 requires that there be provisions for controlling the release of radioactive materials in gaseous and liquid effluents and to handle solid radioactive wastes. The proposed change to the VAS to provide additional pressure differential monitoring and control prevents the unmonitored release of airborne radioactivity to the atmosphere or adjacent plant areas by maintaining a negative pressure differential in this additional area. The proposed changes to the required VAS supply air flow rate and total ventilation flow provided through the auxiliary building fuel handling area do not affect the isolation of the fuel handling area upon detection of high airborne radioactivity. The other proposed changes do not involve systems, structures, and components that are used to control the release of radioactive materials in gaseous and liquid effluents and to handle solid radioactive wastes. Therefore, the proposed changes comply with the requirements of GDC 60.

10 CFR Part 50, Appendix A, GDC 61 requires that fuel storage and handling, radioactive waste, and other systems which may contain radioactivity be designed to assure adequate safety under normal and postulated accident conditions. The proposed changes to the VCS do not affect the in-plant radiation exposures for personnel inside containment, and do not affect the consequences of any postulated accident. The proposed change to the VAS to provide additional pressure differential monitoring and control to prevent the unmonitored release of airborne radioactivity to the atmosphere or adjacent plant areas by maintaining a negative pressure differential in this additional area do not affect the consequences of any postulated accident. The proposed changes to the required VAS supply air flow rate and total ventilation flow provided through the auxiliary building fuel handling area do not affect the isolation of the fuel handling area upon detection of high airborne radioactivity, and do not affect the consequences of any postulated accident. Therefore, the proposed changes comply with the requirements of GDC 61.

4.2 Precedent

No precedent is identified.

4.3 Significant Hazards Consideration Determination

The proposed changes would revise the Combined License (COL) in regards to detailed design of the containment recirculation cooling system (VCS) and radiologically controlled area ventilation system (VAS). The requested amendment requires changes to Updated Final Safety Analysis Report (UFSAR) Tier 2 information, which involve changes to COL Appendix C (and plant-specific DCD Tier 1) information.

An evaluation to determine whether a significant hazards consideration is involved with the requested amendment was completed by focusing on the three standards set forth in 10 CFR 50.92, “Issuance of amendment,” as discussed below:

4.3.1 Does the proposed amendment involve a significant increase in the probability or consequences of an accident previously evaluated?

Response: No

The design functions of the containment recirculation cooling system (VCS) include control of the air temperature and reduction of humidity in the containment to provide a suitable environment for equipment operability during normal power operation, and for personnel accessibility and equipment operability during refueling and shutdown. The proposed changes for the VCS address changes in total required design air flow rates and total design cooling and heating requirements, thereby maintaining these design functions.

The design functions of the radiologically controlled area ventilation system (VAS) include prevention of the unmonitored release of airborne radioactivity to the atmosphere or adjacent plant areas, by maintaining a negative pressure differential in radiologically controlled areas of the auxiliary building, maintaining occupied areas and access and equipment areas within their design temperature range, and providing outside air for plant personnel. The proposed changes for the VAS enable pressure differential monitoring and control for an area of the auxiliary building that is physically remote and separate from the currently

monitored and controlled areas, and provide VAS supply air flow rate and total ventilation flow through the auxiliary building fuel handling area required to maintain occupied areas and access and equipment areas within their design temperature range and to provide outside air for plant personnel, maintaining these design functions.

The proposed changes do not affect the operation of any systems or equipment that initiate an analyzed accident or alter any structure, system, or component (SSC) accident initiator or initiating sequence of events. There are no inadvertent operations or failures of the VCS or VAS considered as accident initiators or part of an initiating sequence of events for an accident previously evaluated. Therefore, the probabilities of the accidents previously evaluated in the UFSAR are not affected.

These proposed changes to the VCS and VAS design as described in the current licensing basis do not have an adverse effect on any of the design functions of the systems. The proposed changes do not affect the support, design, or operation of mechanical and fluid systems required to mitigate the consequences of an accident. There is no change to plant systems or the response of systems to postulated accident conditions. There is no change to the predicted radioactive releases due to postulated accident conditions. The plant response to previously evaluated accidents or external events is not adversely affected, nor do the proposed changes create any new accident precursors. The proposed changes do not affect the prevention and mitigation of other abnormal events, e.g., anticipated operational occurrences, earthquakes, floods and turbine missiles, or their safety or design analyses. Therefore, the consequences of the accidents evaluated in the UFSAR are not affected.

Therefore, the requested amendment does not involve a significant increase in the probability or consequences of an accident previously evaluated.

4.3.2 Does the proposed amendment create the possibility of a new or different kind of accident from any accident previously evaluated?

Response: No

The proposed changes do not affect the operation of any systems or equipment that may initiate a new or different kind of accident, or alter any SSC such that a new accident initiator or initiating sequence of events is created. The proposed changes revise the VCS and VAS design as described in the current licensing basis to enable the systems to perform required design functions. These proposed changes do not adversely affect any other SSC design functions or methods of operation in a manner that results in a new failure mode, malfunction, or sequence of events that affect safety-related or nonsafety-related equipment. Therefore, this activity does not allow for a new fission product release path, result in a new fission product barrier failure mode, or create a new sequence of events resulting in significant fuel cladding failures.

Therefore, the requested amendment does not create the possibility of a new or different kind of accident from any accident previously evaluated.

4.3.3 Does the proposed amendment involve a significant reduction in a margin of safety?

Response: No

The proposed changes maintain existing safety margins. The proposed changes to the VCS and VAS do not affect any safety-related design function. These changes do not adversely affect any design code, function, design analysis, safety analysis input or result, or design/safety margin. No safety analysis or design basis acceptance limit/criterion is challenged or exceeded by the proposed changes, and no margin of safety is reduced.

Therefore, the requested amendment does not involve a significant reduction in a margin of safety.

Based on the above, it is concluded that the proposed amendment does not involve a significant hazards consideration under the standards set forth in 10 CFR 50.92(c), and, accordingly, a finding of "no significant hazards consideration" is justified.

4.4 Conclusions

Based on the considerations discussed above, (1) there is reasonable assurance that the health and safety of the public will not be endangered by operation in the proposed manner, (2) such activities will be conducted in compliance with the Commission's regulations, and (3) the issuance of the amendment will not be inimical to the common defense and security or to the health and safety of the public. Therefore, it is concluded that the requested amendment does not involve a significant hazards consideration under the standards set forth in 10 CFR 50.92(c), and, accordingly, a finding of "no significant hazards consideration" is justified.

5. ENVIRONMENTAL CONSIDERATIONS

The proposed changes affect the Combined License (COL) concerning the design of the containment recirculation cooling system (VCS) and radiologically controlled area ventilation system (VAS). The requested amendment requires changes to Updated Final Safety Analysis Report (UFSAR) Tier 2 information, which involve changes to COL Appendix C information, and corresponding changes to the associated plant-specific Design Control Document (DCD) Tier 1 information.

A review has determined that the requested amendment would change a requirement with respect to installation or use of a facility component located within the restricted area, as defined in 10 CFR Part 20, or would change an inspection or surveillance requirement. However, facility construction and operation following implementation of the requested amendment does not involve (i) a significant hazards consideration, (ii) a significant change in the types or a significant increase in the amounts of any effluents that may be released offsite, or (iii) a significant increase in individual or cumulative occupational radiation exposure. Accordingly, the requested amendment meets the eligibility criteria for categorical exclusion set forth in 10 CFR 51.22(c)(9), in that:

(i) There is no significant hazards consideration.

As documented in Section 4.3, Significant Hazards Consideration Determination, of this license amendment request, an evaluation was completed to determine whether or not a significant hazards consideration is involved by focusing on the three standards set forth in 10 CFR 50.92, "Issuance of amendment." The Significant Hazards Consideration determined that (1) the requested amendment does not involve a significant increase in the probability or consequences of an accident previously evaluated; (2) the requested amendment does not create the possibility of a new or different kind of accident from any accident previously evaluated; and (3) the requested amendment does not involve a significant reduction in a margin of safety. Therefore, it is concluded that the requested amendment does not involve a significant hazards consideration under the standards set forth in 10 CFR 50.92(c), and accordingly, a finding of "no significant hazards consideration" is justified.

(ii) There is no significant change in the types or significant increase in the amounts of any effluents that may be released offsite.

The proposed changes are unrelated to any aspect of plant construction or operation that would introduce any change to effluent types (e.g., effluents containing chemicals or biocides, sanitary system effluents, and other effluents), or affect any plant radiological or non-radiological effluent release quantities. Furthermore, the proposed changes do not affect any effluent release path or diminish the design functions or operational features credited with controlling the release of effluents during plant operation. Therefore, the requested amendment does not involve a significant change in the types or a significant increase in the amounts of any effluents that may be released offsite.

(iii) There is no significant increase in individual or cumulative occupational radiation exposure.

The proposed changes do not adversely affect walls, floors, or other structures that provide shielding. Plant radiation zones are not affected, and there are no changes to the controls required under 10 CFR Part 20 that preclude a significant increase in occupational radiation exposure. Therefore, the requested amendment does not involve a significant increase in individual or cumulative occupational radiation exposure.

Based on the above review of the requested amendment, it has been determined that anticipated construction and operational impacts of the requested amendment do not involve (i) a significant hazards consideration, (ii) a significant change in the types or significant increase in the amounts of any effluents that may be released offsite, or (iii) a significant increase in the individual or cumulative occupational radiation exposure. Accordingly, the requested amendment meets the eligibility criteria for categorical exclusion set forth in 10 CFR 51.22(c)(9). Therefore, pursuant to 10 CFR 51.22(b), no environmental impact statement or environmental assessment need be prepared in connection with the requested amendment and proposed exemption.

6. REFERENCES

None.

South Carolina Electric & Gas Company

NND-16-0554

Enclosure 2

Virgil C. Summer Nuclear Station (VCSNS) Units 2 and 3

Exemption Request

Ventilation System Changes

(LAR 13-30)

(This Enclosure consists of 10 pages, including this cover page.)

1.0 PURPOSE

South Carolina Electric & Gas Company (the Licensee) requests a permanent exemption from the provisions of 10 CFR 52, Appendix D, Section III.B, *Design Certification Rule for the AP1000 Design, Scope and Contents*, to allow a departure from elements of the certification information in Tier 1 of the generic AP1000 Design Control Document (DCD). The regulation, 10 CFR 52, Appendix D, Section III.B, requires an applicant or licensee referencing Appendix D to 10 CFR Part 52 to incorporate by reference and comply with the requirements of Appendix D, including certified information in DCD Tier 1. Tier 1 includes Inspections, Tests, Analyses and Acceptance Criteria (ITAAC) that must be satisfactorily performed prior to fuel load. The design details to be verified by these ITAAC are specified in the tables that are referenced in each individual ITAAC. The Tier 1 information for which a plant-specific departure and exemption is being requested includes detailed information presented in the ITAAC table and supporting tables for the system-based ITAAC related to the containment recirculation cooling system (VCS) and radiologically controlled area ventilation system (VAS).

This request for exemption will apply the requirements of 10 CFR 52, Appendix D, Section VIII.A.4 to allow changes to Tier 1 information due to the following proposed Tier 1 ITAAC changes:

- Tier 1 Table 2.7.7-3 is revised to add the two new containment recirculation fan coil unit assemblies (VCS-MS-01C and VCS-MS-01D).

- Tier 1 Table 2.7.5-1 is revised to add auxiliary building pressure differential indicator, VAS-034, as the last row of the table and to move existing VAS-030 for the fuel handling area to the first row of the table as an editorial change.

- Tier 1 Table 2.7.5-2, Item 2.ii, Inspections, Tests, and Analyses description is revised to add the rail car bay/solid radwaste system areas, and change the Acceptance Criterion for the total ventilation flow rate through the auxiliary building fuel handling and rail car bay/solid radwaste system areas to 10,300 cfm.

This request applies the requirements for granting exemptions from design certification information, as specified in 10 CFR Part 52, Appendix D, Section VIII.A.4, 10 CFR 52.63, §52.7, and §50.12.

2.0 BACKGROUND

The Licensee is the holder of Combined License Nos. NPF-93 and NPF-94, which authorize construction and operation of two Westinghouse Electric Company AP1000 nuclear plants, named Virgil C. Summer Nuclear Station (VCSNS) Units 2 and 3, respectively.

The design of the VCS as described in Revision 19 of the AP1000 Design Control Document (DCD) was based upon the approved design of the VCS for the Westinghouse AP600 plant. However, final design of the VCS has resulted in proposed changes to the layout and sizing of the containment recirculation fan coil unit assemblies and associated ductwork, and changes to the total required design air flow rates and total design cooling and heating requirements. This includes proposed changes to the

nominal design values for normal and low speed air flow rates, cooling capacity, chilled water flow rate, heating capacity, hot water flow rate, and supply air temperature for normal power operation for the containment recirculation fan coil unit assemblies. This activity involves an exemption from generic DCD Tier 1 Table 2.7.7-3 by adding the two new containment recirculation fan coil unit assemblies (VCS-MS-01C and VCS-MS-01D) to the list of VCS components and locations currently identified in this table.

The VAS provides ventilation for the fuel handling area of the auxiliary building, and the radiologically controlled portions of the auxiliary and annex buildings, with the exception of the health physics and hot machine shop areas, which are provided with a separate ventilation system. The VAS consists of the auxiliary/annex building ventilation subsystem and the fuel handling area ventilation subsystem. These subsystems provide ventilation to maintain occupied areas and access and equipment areas within their design temperature range, provide outside air for plant personnel, and prevent the unmonitored release of airborne radioactivity to the atmosphere or adjacent plant areas, by maintaining a negative pressure differential relative to the outside atmosphere and non-radiologically controlled areas in the areas serviced. The VAS automatically isolates selected building areas by closing the supply and exhaust duct isolation dampers and starts the containment air filtration system (VFS) when high airborne radioactivity in the exhaust air duct or high positive pressure differential relative to the outside atmosphere and non-radiologically controlled areas is detected. Pressure differential indication and alarms are currently provided via three instruments to control the negative pressure in the fuel handling area of the auxiliary building and in the radiologically controlled areas of the auxiliary and annex buildings.

A change is proposed to add a fourth VAS pressure differential instrument to provide indication, control, and alarm functions for the auxiliary building component cooling water system (CCS) valve room while the exhaust flow path is aligned to the VFS filtered exhaust. This provides pressure differential monitoring and control for the auxiliary building CCS valve room, which is an area of the auxiliary building that is physically remote and separate from the currently monitored and controlled areas. An existing pressure differential instrument for the auxiliary building middle annulus is also renumbered as part of this change. This activity involves an exemption from generic DCD Tier 1 Table 2.7.5-1 by adding the new pressure differential instrument to the table and revising the order of the instruments in the table, such that they are listed in numeric order.

Based on final calculations of heat loads in the areas serviced by the VAS, the required cooling airflows for the VAS are changed. This results in proposed changes to the required VAS supply air flow rate and total ventilation flow provided through the auxiliary building fuel handling area. This activity involves an exemption from generic DCD Tier 1 Table 2.7.5-2, VAS ITAAC item 2.ii to include the rail car bay/solid radwaste system area in the scope of the auxiliary building ventilation flow rate testing and to revise the acceptance criteria for this testing to 10,300 cubic feet per minute (cfm).

These activities require an exemption from the generic DCD Tier 1 tables that are involved with the plant-specific DCD Tier 2 departures, and which support the associated COL Appendix C ITAAC. This enclosure requests an exemption from elements of the AP1000 (Tier 1) design information to allow a departure from the tables providing information supporting the associated ITAAC for the VCS and VAS. As discussed above, an exemption from elements of the AP1000 certified (Tier 1) design information is

requested to allow plant-specific departures to be taken from system-based ITAAC Tables 2.7.7-3, 2.7.5-1, and 2.7.5-2.

3.0 TECHNICAL JUSTIFICATION OF ACCEPTABILITY

An exemption is requested to depart from AP1000 generic Design Control Document (DCD) Tier 1 material by departing from:

- Tier 1 Table 2.7.7-3 by adding the two new containment recirculation fan coil unit assemblies (VCS-MS-01C and VCS-MS-01D) and their locations to the list of components that are verified by the VCS functional arrangement ITAAC provided in Tier 1 Table 2.7.7-2, ITAAC item 1;
- Tier 1 Table 2.7.5-1 by adding the new pressure differential instrument, VAS-033, (and editing the table to list the instruments in numeric order) to the list of instruments that are verified by Tier 1 Table 2.7.5-2, ITAAC item 2.i, to maintain a negative pressure differential in the served areas of the annex, fuel handling and radiologically controlled auxiliary buildings and are verified by Tier 1 Table 2.7.5-2, ITAAC item 3, to maintain instrument parameter displays that can be retrieved in the main control room;
- Tier 1 Table 2.7.5-2 by including the rail car bay/solid radwaste system area in the scope of the auxiliary building ventilation flow rate testing specified in the Inspections, Tests, and Analyses field of ITAAC item 2.i, and revising the Acceptance Criteria for this testing to 10,300 cubic feet per minute (cfm).

The change to add the two new VCS containment recirculation fan coil unit assemblies and their locations to Tier 1 Table 2.7.7-3 is consistent with proposed UFSAR Tier 2 changes to the layout and sizing of the containment recirculation fan coil unit assemblies and associated ductwork, and changes to the total required design air flow rates and total design cooling and heating requirements. These proposed VCS configuration changes do not adversely affect the ability of the VCS to perform its design functions of the VCS, as defined in UFSAR Subsection 9.4.6. The requested Tier 1 exemption will allow the inclusion of the two new containment recirculation fan coil unit assemblies in the scope of Tier 1 ITAAC Table 2.7.7-2, item 1, which already includes the two containment recirculation fan coil unit assemblies (VCS-MS-01A and VCS-MS-01B) that are currently in the certified AP1000 design.

The change to add a fourth VAS pressure differential instrument, VAS-033, including indication of its main control room display and control function, is consistent with the proposed UFSAR Tier 2 change to add this pressure differential instrument to provide indication, control, and alarm functions for the auxiliary building component cooling system (CCS) valve room. This additional pressure differential instrument supports the design functions of the VAS auxiliary/annex building ventilation subsystem by providing pressure differential instrumentation to an area of the auxiliary building that is remote and physically separate from the auxiliary building areas that are currently monitored and controlled by the three existing VAS pressure differential instruments. The requested Tier 1 exemption will allow the inclusion of the new, fourth pressure differential instrument in the scope of Tier 1 ITAAC Table 2.7.5-2, ITAAC items 2.i and 3, which already include the three VCS pressure differential instruments, VAS-030, VAS-032, and VA-034 (currently identified as VAS-033), that are currently in the certified

AP1000 design. The change to rearrange the order of the instruments listed in Table 2.7.5-1 is editorial, and does not adversely affect implementation of the ITAAC involving the instruments in this table.

As per UFSAR Subsection 9.4.3.2.1.2, the rail car bay/solid waste system area is included in the plant areas served by the VAS subsystem that also serves the fuel handling area; therefore, the change to include the rail car bay/solid radwaste system area in the scope of the auxiliary building ventilation flow rate testing specified in the Inspections, Tests, and Analyses field of Tier 1 Table 2.7.5-2, ITAAC item 2.i, is consistent with the subsystem design as described in the UFSAR, and provides a more comprehensive description of the test performed to verify the ability of the VAS to maintain the areas served at a slightly negative pressure relative to the atmosphere or adjacent clean plant areas. Additionally, the change to the Acceptance Criteria for this ventilation flow testing is consistent with the revised total ventilation flow rates provided by the fuel handling area ventilation subsystem as a result of the reduction in heat loads in the areas serviced by the VAS. The requested Tier 1 exemption will allow the change to the scope and acceptance criteria for the ventilation flow testing in Tier 1 ITAAC Table 2.7.5-2, ITAAC item 2.i, to be consistent with the description of this subsystem and the reduced flow requirements.

Therefore, the containment recirculation cooling system (VCS) and radiologically controlled area ventilation system (VAS) will continue to provide their design functions following implementation of the proposed changes.

Detailed technical justification supporting this request for exemption is provided in Section 2 of the associated License Amendment Request in Enclosure 1 of this letter.

4.0 JUSTIFICATION OF EXEMPTION

10 CFR Part 52, Appendix D, Section VIII.A.4 and 10 CFR 52.63(b)(1) govern the issuance of exemptions from elements of the certified design information for AP1000 nuclear power plants. Because the Licensee has identified changes to the system-based ITAAC information as presented in Tier 1 Tables 2.7.7-3, 2.7.5-1, and 2.7.5-2, an exemption from the certified design information in Tier 1 is needed.

10 CFR Part 52, Appendix D, and 10 CFR 50.12, §52.7, and §52.63 state that the NRC may grant exemptions from the requirements of the regulations provided six conditions are met: 1) the exemption is authorized by law [§50.12(a)(1)]; 2) the exemption will not present an undue risk to the health and safety of the public [§50.12(a)(1)]; 3) the exemption is consistent with the common defense and security [§50.12(a)(1)]; 4) special circumstances are present [§50.12(a)(2)(ii)]; 5) the special circumstances outweigh any decrease in safety that may result from the reduction in standardization caused by the exemption [§52.63(b)(1)]; and 6) the design change will not result in a significant decrease in the level of safety [Part 52, App. D, VIII.A.1].

The requested exemption to change the system-based ITAAC information as presented in Tier 1 Table 2.7.7-3 for the VCS and Tier 1 Tables 2.7.5-1 and 2.7.5-2 for the VAS satisfies the criteria for granting specific exemptions, as described below.

1. **This exemption is authorized by law**

   The NRC has authority under 10 CFR 52.63, §52.7, and §50.12 to grant exemptions from the requirements of NRC regulations. Specifically, 10 CFR 50.12 and §52.7 state that the NRC may grant exemptions from the requirements of 10 CFR Part 52 upon a proper showing. No law exists that would preclude the changes covered by this exemption request. Additionally, granting of the proposed exemption does not result in a violation of the Atomic Energy Act of 1954, as amended, or the Commission's regulations.

   Accordingly, this requested exemption is "authorized by law," as required by 10 CFR 50.12(a)(1).

2. **This exemption will not present an undue risk to the health and safety of the public**

   The proposed exemption from the requirements of 10 CFR 52, Appendix D, Section III.B would allow changes to elements of the plant-specific Tier 1 DCD to depart from the AP1000 certified (Tier 1) design information. The plant-specific DCD Tier 1 will continue to reflect the approved licensing basis for VCSNS Units 2 and 3, and will maintain a consistent level of detail with that which is currently provided elsewhere in Tier 1 of the DCD. Therefore, the affected plant-specific DCD Tier 1 ITAAC will continue to serve their required purpose.

   The VAS and VCS changes do not introduce any new industrial, chemical, or radiological hazards that would represent a public health or safety risk, nor do they modify or remove any design or operational controls or safeguards intended to mitigate any existing on-site hazards. Furthermore, the proposed changes would not allow for a new fission product release path, result in a new fission product barrier failure mode, or create a new sequence of events that would result in fuel cladding failures. These changes do not represent any adverse impact to the design functions of the VAS or VCS, or their ability to protect the health and safety of the public. Accordingly, these changes do not present an undue risk from any existing or proposed equipment or systems.

   Therefore, the requested exemption from 10 CFR 52, Appendix D, Section III.B would not present an undue risk to the health and safety of the public.

3. **The exemption is consistent with the common defense and security**

   The exemption from the requirements of 10 CFR 52, Appendix D, Section III.B would change the list of VCS equipment and locations in Tier 1 Table 2.7.7-3, the list of VAS pressure differential instruments and main control room display requirements in Tier 1 Table 2.7.5-1, and the auxiliary building VAS ventilation flow rate testing scope and acceptance criterion in Tier 1 Table 2.7.5-2 in the plant-specific DCD Tier 1, thereby departing from the AP1000 certified (Tier 1) design information. The proposed exemption will enable performance of the ITAAC associated with these changed elements, by reflecting the current design information for the systems, structures, and components (SSCs) that are referenced in these ITAAC tables. The exemption does not

adversely impact the design, function, or operation of any plant SSCs associated with the facility's physical or cyber security, and therefore does not adversely affect any plant equipment that is necessary to maintain a safe and secure plant status. The proposed exemption has no adverse impact on plant security or safeguards.

Therefore, the requested exemption is consistent with the common defense and security.

4. Special circumstances are present

10 CFR 50.12(a)(2) lists six "special circumstances" for which an exemption may be granted. Pursuant to the regulation, it is necessary for one of these special circumstances to be present in order for the NRC to consider granting an exemption request. The requested exemption meets the special circumstances of 10 CFR 50.12(a)(2)(ii). That subsection defines special circumstances as when "Application of the regulation in the particular circumstances would not serve the underlying purpose of the rule or is not necessary to achieve the underlying purpose of the rule."

The rule under consideration in this request for exemption is 10 CFR 52, Appendix D, Section III.B, which requires that a licensee referencing the AP1000 Design Certification Rule (10 CFR Part 52, Appendix D) shall incorporate by reference and comply with the requirements of Appendix D, including Tier 1 information. The VCSNS Units 2 and 3 COLs reference the AP1000 Design Certification Rule and incorporate by reference the requirements of 10 CFR Part 52, Appendix D, including Tier 1 information. The underlying purpose of Appendix D, Section III.B is to describe and define the scope and contents of the AP1000 design certification, and to require compliance with the design certification information in Appendix D.

The proposed exemption would allow changes to the location, configuration, and test acceptance criteria in plant-specific Tier 1 Tables 2.7.5-1, 2.7.5-2, and 2.7.7-3 to conform to the corresponding design details for proposed changes to equipment in the radiologically controlled area ventilation system (VAS) and containment recirculation cooling system (VCS). These changes have been evaluated and confirmed to support the conclusions of the supporting design analyses; therefore, implementation of these changes will not adversely affect the ability of the VAS and VCS to accomplish their design functions.

The proposed changes described above maintain the design functions of the nonsafety-related ventilation systems and the structures, systems, or components (SSCs) in areas served by these systems. This change does not impact the ability of any SSCs to perform their functions or negatively impact safety. Furthermore, the proposed changes to the information in Tier 1 Tables 2.7.5-1, 2.7.5-2 and 2.7.7-3 are consistent with format and content of other similar information currently provided in these Tier 1 tables. Accordingly, this change to the certified information will enable the licensee to safely verify the construction of the AP1000 facility consistent with the design certified by the NRC in 10 CFR Part 52, Appendix D.

Therefore, special circumstances are present, because application of the current generic certified design information in Tier 1 as required by 10 CFR Part 52, Appendix D, Section III.B, in the particular circumstances discussed in this request is not necessary to achieve the underlying purpose of the rule.

5. **The special circumstances outweigh any decrease in safety that may result from the reduction in standardization caused by the exemption**

   The exemption from the requirements of 10 CFR 52, Appendix D, Section III.B would change elements of the plant-specific DCD Tier 1 by departing from standard AP1000 certified (Tier 1) design information. This exemption would allow a change to system based ITAAC information presented in Tier 1 Tables 2.7.7-3, 2.7.5-1, and 2.7.5-2. Based on the nature of the proposed changes to the generic Tier 1 information and the understanding that these changes were identified during the design finalization process for the AP1000, it is expected that this exemption will be requested by other AP1000 licensees and applicants. However, even if other AP1000 licensees and applicants do not request this same departure, the special circumstances will continue to outweigh any decrease in safety from the reduction in standardization because the design functions of the nonsafety-related ventilation systems associated with this request will continue to be maintained. Furthermore, the justification provided in the license amendment request and this exemption request and the associated mark-ups demonstrate that there is a limited change from the standard information provided in the generic AP1000 DCD, which is offset by the special circumstances identified above.

   Therefore, the special circumstances associated with the requested exemption outweigh any decrease in safety that may result from the reduction in standardization caused by the exemption.

6. **The design change will not result in a significant decrease in the level of safety.**

   The proposed exemption would allow departure from AP1000 generic Tier 1 DCD information by revising Tier 1 Table 2.7.7-3 to include two new containment recirculation fan coil unit assemblies and their locations, Tier 1 Table 2.7.5-1 to add auxiliary building pressure differential indicator, VAS-034, as the last row of the table (and editing the table to list the instruments in numeric order), and Tier 1 Table 2.7.5-2 to include the rail car bay/solid radwaste system area in the scope of the auxiliary building ventilation flow rate testing and revise the Acceptance Criteria for this testing to align with system design calculations. The affected systems, VAS and VBS, serve no safety-related functions, and the proposed changes do not have an adverse effect on the ability of any safety-related SSCs to perform their design basis functions.

   As a result of the limited-scope and nature of the proposed changes associated with this exemption request, no systems or equipment will be adversely impacted such that there are new failure modes introduced by these changes and the design functions provided by the nonsafety-related VAS and VCS will be maintained.

   Because, with the proposed changes, the VAS and VCS continue to perform their design functions and the level of safety provided by the current systems and equipment in areas served by these systems is unchanged, it is concluded that the design change associated with the proposed exemption will not result in a significant decrease in the level of safety.

5.0 RISK ASSESSMENT

A risk assessment was not determined to be applicable to address the acceptability of this proposal.

6.0 PRECEDENT EXEMPTIONS

None identified.

7.0 ENVIRONMENTAL CONSIDERATION

The Licensee requests a departure from elements of the certified information in Tier 1 of the generic AP1000 DCD. The Licensee has determined that the proposed departure would require a permanent exemption from the requirements of 10 CFR 52, Appendix D, Section III.B, *Design Certification Rule for the AP1000 Design, Scope and Contents,* with respect to installation or use of facility components located within the restricted area, as defined in 10 CFR Part 20, or which changes an inspection or a surveillance requirement; however, the Licensee evaluation of the proposed exemption has determined that the proposed exemption meets the eligibility criteria for categorical exclusion set forth in 10 CFR 51.22(c)(9).

Based on the above review of the proposed exemption, the Licensee has determined that the proposed activity does not involve (i) a significant hazards consideration, (ii) a significant change in the types or significant increase in the amounts of any effluents that may be released offsite, or (iii) a significant increase in the individual or cumulative occupational radiation exposure. Accordingly, the proposed exemption meets the eligibility criteria for categorical exclusion set forth in 10 CFR 51.22(c)(9). Therefore, pursuant to 10 CFR 51.22(b), an environmental impact statement or environmental assessment of the proposed exemption is not required.

Specific details of the environmental considerations supporting this request for exemption are provided in Section 5 of the associated License Amendment Request provided in Enclosure 1 of this letter.

8.0 CONCLUSION

The Licensee requests a permanent exemption from elements of AP1000 design certification information reflected in Tier 1. The proposed changes to Tier 1 are necessary to revise ITAAC Table 2.7.7-3, Table 2.7.5-1, and Table 2.7.5-2 in the plant-specific DCD Tier 1 to reflect proposed plant-specific design. The proposed exemption would allow departure from AP1000 generic Tier 1 DCD information by revising Tier 1 Table 2.7.7-3 to include two new containment recirculation fan coil unit assemblies and their locations, Tier 1 Table 2.7.5-1 to include a new pressure differential instrument, VAS-033 (and editing the table to list the instruments in numeric order), and Tier 1 Table 2.7.5-2 to include the rail car bay/solid radwaste system area in the scope of the auxiliary building ventilation flow rate testing and revise the Acceptance Criteria for this testing to align with system design calculations. These Tier 1 changes reflect corresponding changes proposed to UFSAR Tier 2 information to enhance the design of the ventilation systems. The exemption request meets the requirements of 10 CFR 52.63, *Finality of design certifications*, 10 CFR 52.7, *Specific exemptions*, 10 CFR 50.12, *Specific exemptions*, and 10 CFR 52 Appendix D, *Design Certification Rule for the AP1000*. Specifically, the exemption request meets the criteria of 10 CFR 50.12(a)(1) in that the request is authorized by law, presents no undue risk to public

health and safety, and is consistent with the common defense and security. Furthermore, approval of this request does not result in a significant decrease in the level of safety, satisfies the underlying purpose of the AP1000 Design Certification Rule, and does not present a significant decrease in safety as a result of a reduction in standardization.

9.0 REFERENCES

None

South Carolina Electric & Gas Company

NND-16-0554

Enclosure 3

Virgil C. Summer Nuclear Station (VCSNS) Units 2 and 3

Proposed Changes to the Licensing Basis Documents

(LAR 13-30)

(This Enclosure consists of 12 pages, including this cover page.)

A. Change to Configuration of the Containment Recirculation Fan Coil Unit Assemblies

1. Tier 1 Section 2.7.7, Containment Recirculation Cooling System, Table 2.7.7-3,

[VCSNS Tier 1, pg. 2.7.7-2]

[VCSNS Unit 2 COL, Appendix C, pg. C-399]

[VCSNS Unit 3 COL, Appendix C, pg. C-399]

Revise Tier 1 information, as shown below:

Table 2.7.7-3		
Component Name	**Tag No.**	**Component Location**
Reactor Containment Recirculation Fan Coil Unit Assembly A	VCS-MS-01A	Containment
Reactor Containment Recirculation Fan Coil Unit Assembly B	VCS-MS-01B	Containment
Reactor Containment Recirculation Fan Coil Unit Assembly C	VCS-MS-01C	Containment
Reactor Containment Recirculation Fan Coil Unit Assembly D	VCS-MS-01D	Containment

2. UFSAR Section 1.2, "General Plant Description," Subsection 1.2.4.1, "Containment Building"

Revise Tier 2 information in the seventh paragraph under the Equipment Arrangement heading, as follows:

~~Two~~ Four containment recirculation ~~cooling units~~ fan coil unit assemblies are located adjacent to the steam generator compartments. Each ~~unit~~ consists of ~~two~~ a vane axial fan~~s~~, cooling coils, and the associated exit ducts and inlet plenum. The four ~~recirculation fans~~ fan coil unit assemblies are connected to the common exit plenum (ring header). Several vertical ducts branch off from the ring header to provide cooling flow to the lower compartments in the containment while other vertical ducts are directed up to provide cooling flow to the upper regions of the containment vessel.

3. **<u>UFSAR Section 9.2, "Water Systems," Figure 9.2.7-1 (Sheet 3 of 4), "Simplified Central Chilled Water System Piping and Instrumentation Diagram (REF) VWS 003"</u>:**

Revise Tier 2 information to add new containment recirculation fan coil unit assembly, VCS-MS-01C, to the units served by the central chilled water system (VWS) and alternately by the hot water heating system (VYS), as depicted below in the excerpt from the left side of the figure:

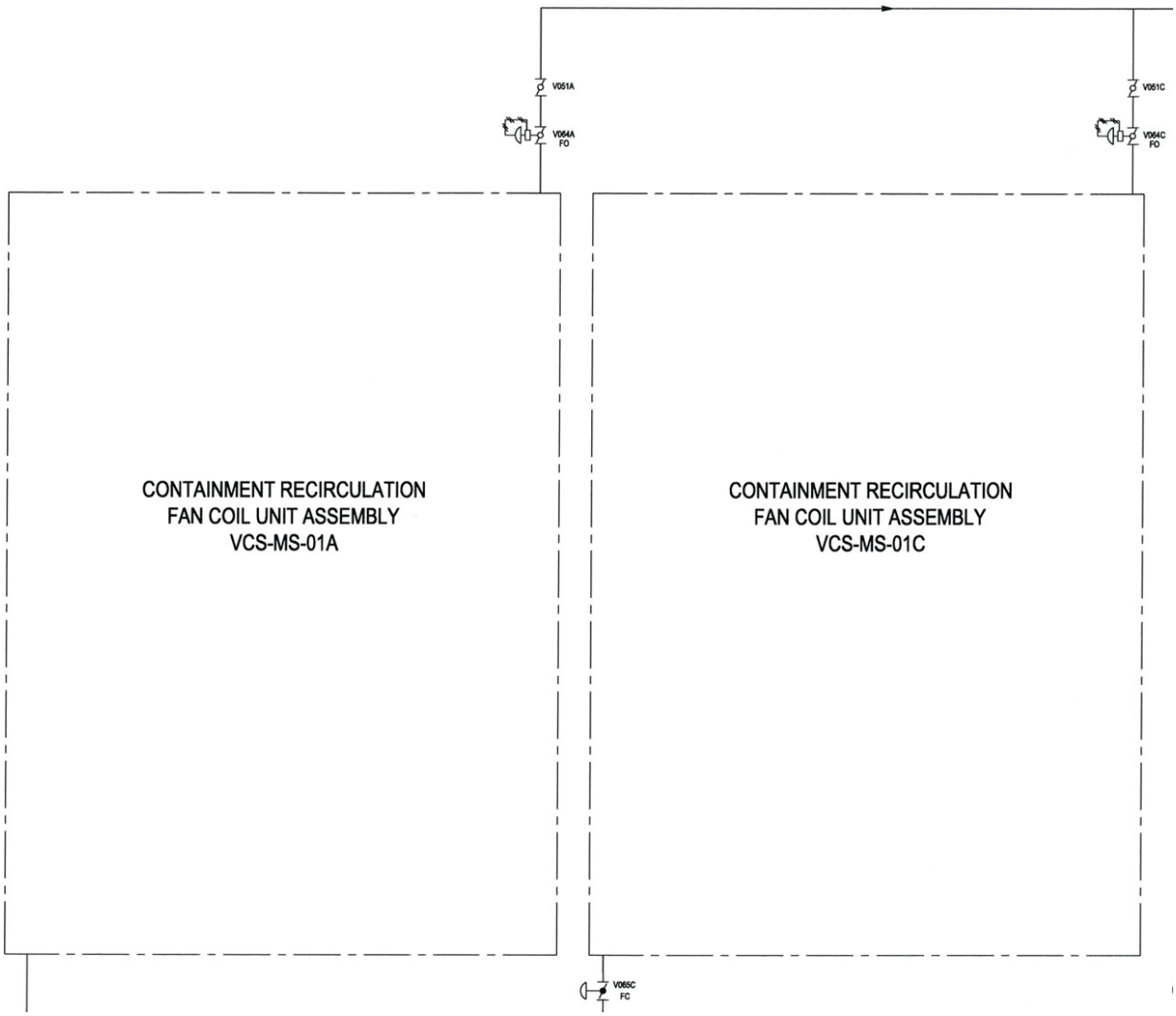

Revise Tier 2 information to add new containment recirculation fan coil unit assembly, VCS-MS-01D, to the units served by the VWS and alternately VYS, as depicted below in the excerpt from the right side of the figure:

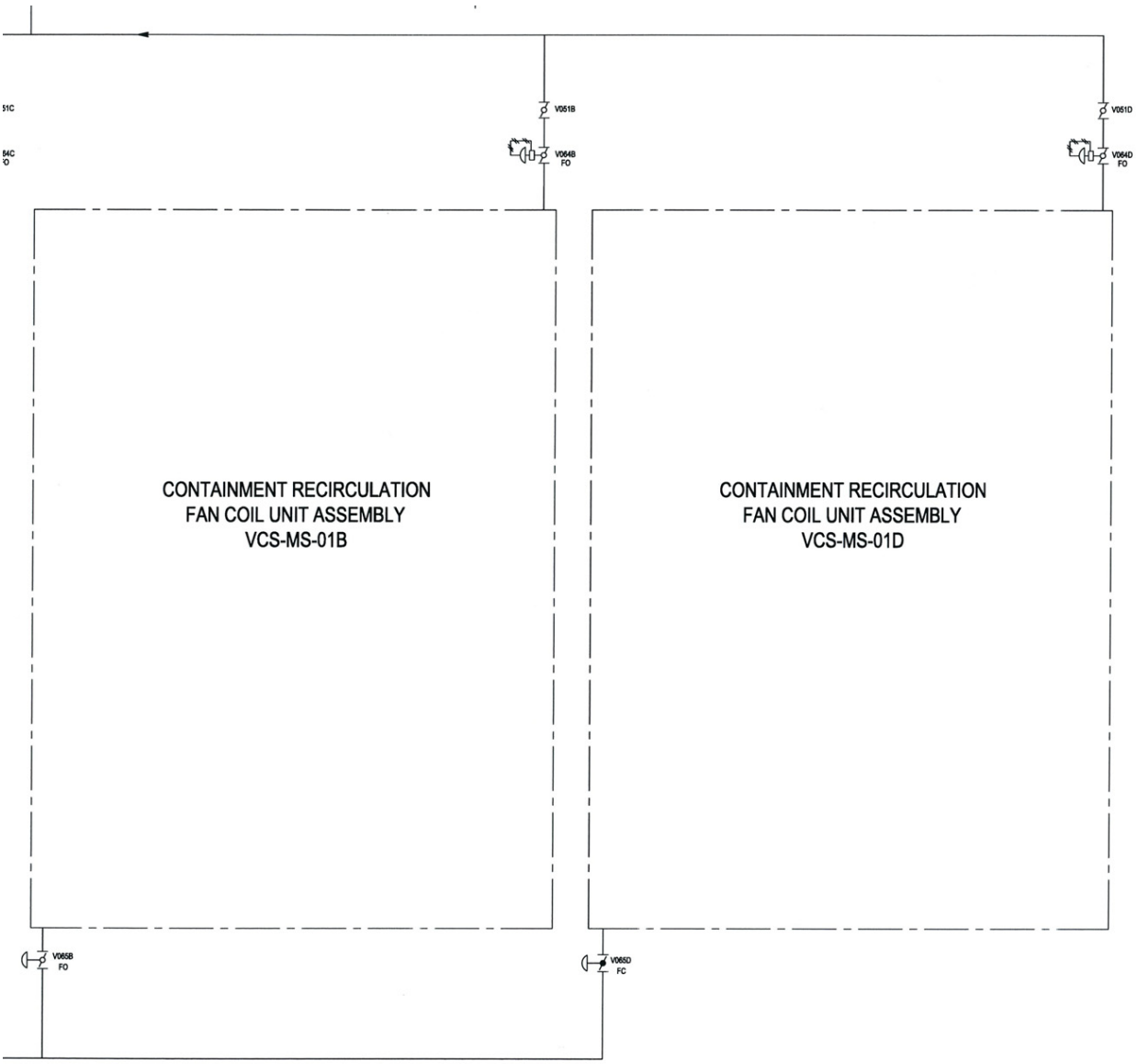

4. **UFSAR Section 9.4, "Air-Conditioning, Heating, Cooling, and Ventilation System," Subsection 9.4.6.2.1, "General Description":**

Revise Tier 2 text in the first paragraph, as follows:

The containment recirculation cooling system is comprised of ~~two 100~~ four 50 percent capacity ~~skid-mounted~~ fan coil unit assemblies ~~with a total of four 50 percent capacity fan coil units~~ which connect to a common duct ring header and distribution system. Each fan coil unit assembly contains a fan and associated cooling coil banks. The ~~two~~ fan coil unit assemblies are located on ~~a platform~~ two platforms at elevation 153′-0″, with two fan coil unit assemblies occupying each platform. The platforms are located approximately 180 degrees apart to provide a proper return air and mixing pattern through the ring header. The top of the ring header is approximately at elevation 176′-6″. The ring header and the fan assemblies are designed to provide uniform air and temperature distribution inside the containment, considering the possibility that one fan coil unit assembly may be out of service.

5. **UFSAR Section 9.4, Subsection 9.4.6.2.2, "Component Description":**

Revise the Containment Recirculation Fan Coil Units heading and Tier 2 text in the first paragraph under this heading, as follows:

Containment Recirculation Fan Coil Unit~~s~~ Assemblies

Each 50 percent capacity fan coil unit assembly consists of ~~two separate but physically connected 50 percent capacity fan coil units. Each fan coil unit assembly is comprised of~~ a return air mixing plenum section with ~~a physical barrier in the middle and three~~ two cooling coils attached to each of the four ~~the~~ sides of each plenum section. The cooling coils are counterflow finned tubular type. The cooling coils are rated and meet the performance requirements in accordance with ANSI/ARI 410 (Reference 12) and ASHRAE 33 (Reference 11).

6. **UFSAR Section 9.4, Subsection 9.4.6.2.3, "System Operation":**

Revise Tier 2 text under the Normal Plant Operation heading, as follows:

During normal plant operation, one of the two 50 percent capacity ~~fans in each~~ fan coil unit ~~assembly~~ assemblies on each platform draws air from the upper levels of the operating floor and delivers cooling air through the ring duct and the secondary ductwork distribution system to the cubicles, compartments, and access areas above and below the operating floor. In addition, cooling air is delivered to the reactor cavity and reactor support areas to maintain appropriate local area and concrete temperatures. ~~The normal supply temperature is 60°F~~ The nominal supply air temperature provided by the fan coil unit assemblies during normal operation is 70°F in order to meet the environmental design requirements ~~during various modes of operation~~.

As the supply air absorbs the heat released from various components inside containment, return air rises through vertical passages and openings due to its lower density to the upper containment level where it is again drawn into the fan coil ~~units~~ unit assemblies, cooled, dehumidified, and recirculated.

The standby fans ~~coil units~~ will be started automatically if one of the following events occurs:

- Air discharge flow rate from the operating fans decreases to a predetermined setpoint
- Electrical and/or control power is lost

~~Fan coil unit supply fans~~ Fans are connected to 480V buses with backup power supply from the onsite standby diesel generators. Following a reactor shutdown when the containment air temperature is below a predetermined temperature, the ~~fan coil units~~ cooling water supply to the four fan coil unit assemblies will be manually realigned by the operators from the central chilled water system to the hot water heating system. Refer to Subsection 9.2.7 for further details.

Revise Tier 2 text under the Integrated Leak Rate Testing Operation heading, as follows:

During integrated leak rate testing, fan coil unit assembly operation is controlled by the main control room operator. The ~~fan coil unit~~ vaneaxial fans are operated at low speed to prevent the fan motors from exceeding their rated horsepower while equalizing the containment air temperature and pressure which could affect the containment integrated leak rate testing results. The recirculation fan coil ~~units~~ unit assemblies draw air from the upper levels of the operating floor and deliver airflow through the ring header and its distribution ductwork that is connected to equipment compartments, cubicles, and access areas above and below the operating floor.

7. UFSAR Section 9.4, Table 9.4.6-1, "Component Data – Containment Recirculation Cooling System Containment Recirculation Fan Coil Unit Subsystem (Nominal Values)":

Revise Tier 2 information in this table, as follows:

Table 9.4.6-1
Component Data – Containment
Recirculation Cooling System
~~Containment Recirculation Fan Coil Unit Subsystem~~
(Nominal Design Values)

~~Reactor Containment Recirculation~~ **Fan Coil Unit Assemblies**	
Quantity	~~2~~ 4
~~Fan coil units per assembly~~	~~2~~
System capacity per assembly (%)	~~100~~ 50
Fan Data (per assembly)	
Quantity (fans~~/unit~~)	1
Type	Vaneaxial
Normal design air flow (scfm @ 0 psig)	~~62,800~~ 77,000
Low speed design air flow (scfm @ 59 psig)	~~37,200~~ 122,700
Fan total ~~static~~ pressure (in.wg)	11
~~Cooling~~ **Coil Data (per assembly)**	
Quantity (coil banks~~/unit~~)	~~3~~ 4 (2 coils/bank)
Total cooling ~~load~~ capacity (Btu/hr)	~~3,804,500~~ 4,816,000
Total chilled water flow rate (gpm)	~~475~~ 600
Total heating ~~load~~ capacity (Btu/hr)	~~2,247,857~~ 2,437,000
Total hot water flow rate (gpm)	~~225~~ 63

8. **<u>UFSAR Section 9.4, Figure 9.4.6-1, "Simplified Containment Recirculation Cooling System Piping and Instrumentation Diagram (REF) VCS 001"</u>:**

   Revise Tier 2 information to change the number and configuration of the containment recirculation fan coil unit assemblies, as depicted below in the excerpt from the left side of the figure:

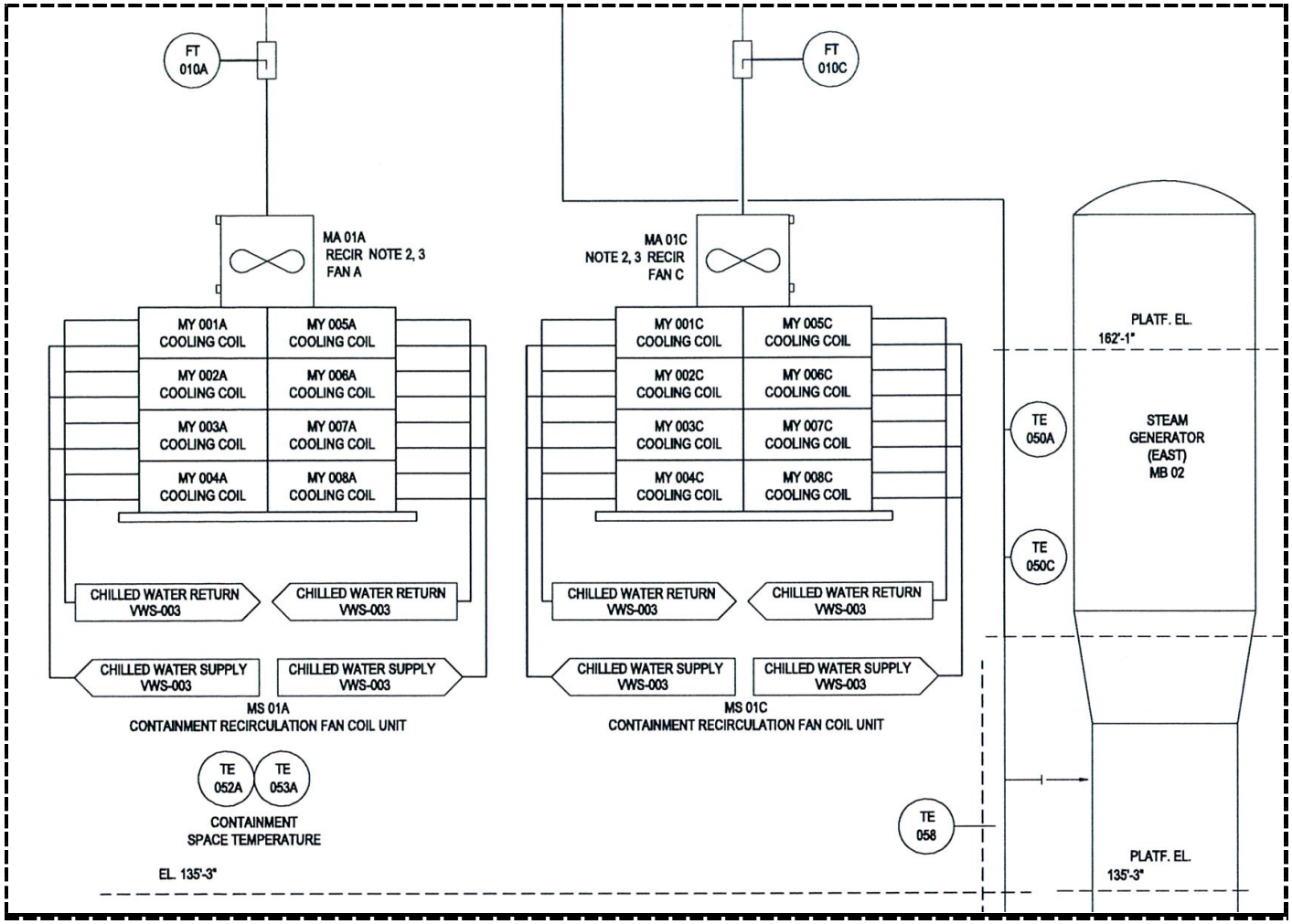

Revise Tier 2 information to change the number and configuration of the containment recirculation fan coil unit assemblies, as depicted below in the excerpt from the right side of the figure:

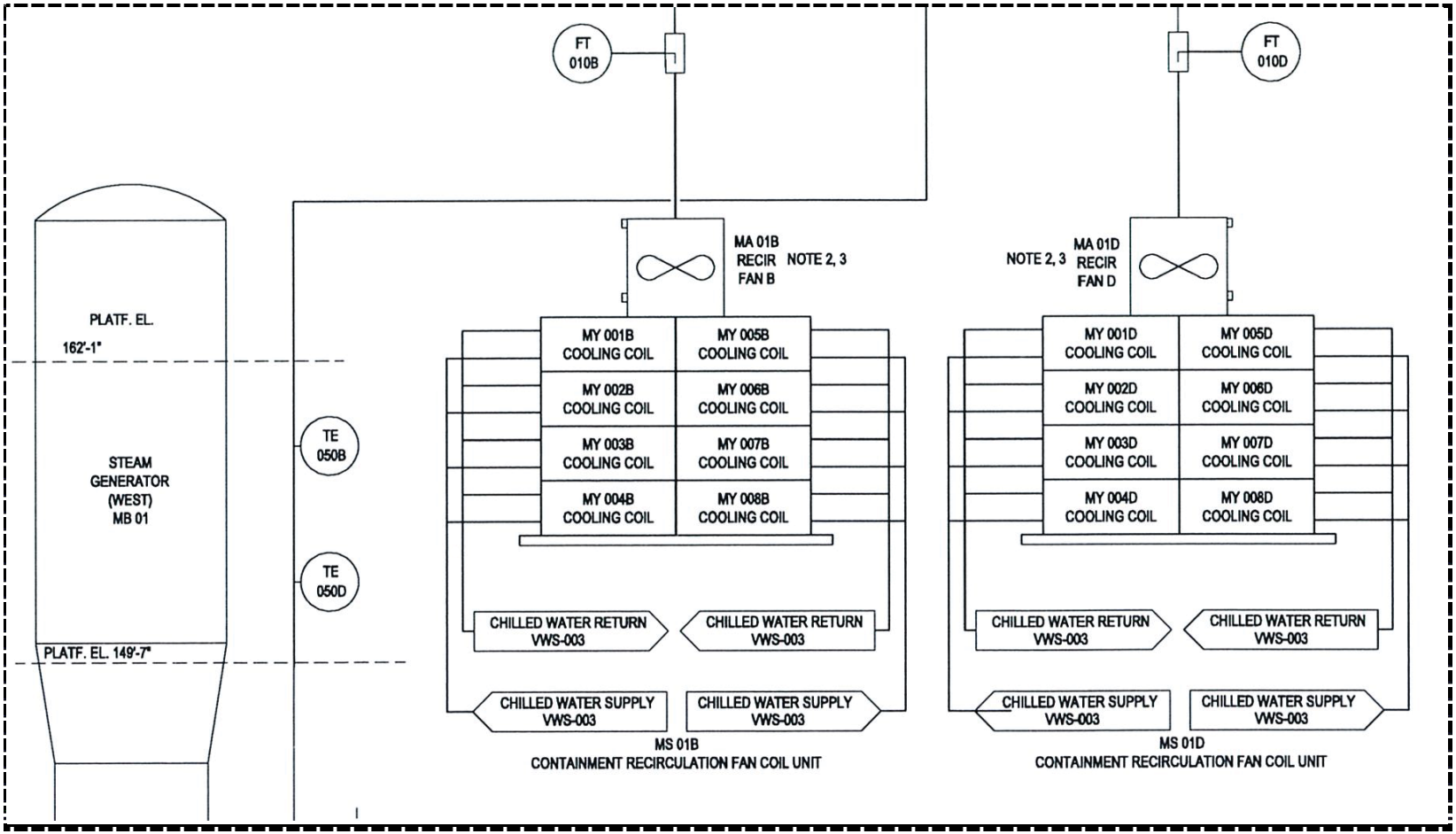

B. Addition of Fourth VAS Pressure Differential Instrument

1. Tier 1 Section 2.7.5, "Radiologically Controlled Area Ventilation System," Table 2.7.5-1:

[VCSNS Tier 1, pg. 2.7.5-1]

[VCSNS Unit 2 COL, Appendix C, pg. C-392]

[VCSNS Unit 3 COL, Appendix C, pg. C-392]

Revise Tier 1 information, as shown below:

Table 2.7.5-1			
Equipment	**Tag No.**	**Display**	**Control Function**
Fuel Handling Area Pressure Differential Indicator	VAS-030	Yes	–
Annex Building Pressure Differential Indicator	VAS-032	Yes	–
Auxiliary Building Pressure Differential Indicator	VAS-033	Yes	–
~~Fuel Handling Area Pressure Differential Indicator~~	~~VAS-030~~	~~Yes~~	~~–~~
Auxiliary Building Pressure Differential Indicator	VAS-034	Yes	–

2. Tier 2 – UFSAR Section 9.4, "Air-Conditioning, Heating, Cooling, and Ventilation System," Subsection 9.4.3.5, "Instrumentation Applications":

Revise Tier 2 information in the fourth paragraph, as follows:

Differential pressure indication and high differential pressure alarms are provided for the filters in the air handling units and room coolers. Pressure differential indication and alarms are provided via instruments (VAS-030, VAS-032, ~~and~~ VAS-033, and VAS-034) to control the negative pressure in the fuel handling area of the auxiliary building, and in the radiologically controlled areas of the auxiliary and annex buildings.

C. Reduction in VAS Fuel Handling Area Ventilation Subsystem Flow

1. Tier 1 Section 2.7.5, "Radiologically Controlled Area Ventilation System," Table 2.7.5-2, "Inspections, Tests, Analyses, and Acceptance Criteria":

[VCSNS Tier 1, pg. 2.7.5-2]

[VCSNS Unit 2 COL, Appendix C, pg. C-393]

[VCSNS Unit 3 COL, Appendix C, pg. C-393]

Revise Tier 1 information in this table, as shown below:

Table 2.7.5-2
Inspections, Tests, Analyses, and Acceptance Criteria

Design Commitment	Inspections, Tests, Analyses	Acceptance Criteria
* * *	* * *	* * *
2. The VAS maintains each building area at a slightly negative pressure relative to the atmosphere or adjacent clean plant areas.	i) Testing will be performed to confirm that the VAS maintains each building at a slightly negative pressure when operating all VAS supply AHUs and all VAS exhaust fans.	i) The time average pressure differential in the served areas of the annex, fuel handling and radiologically controlled auxiliary buildings as measured by each of the instruments identified in Table 2.7.5-1 is negative.
	ii) Testing will be performed to confirm the ventilation flow rate through the auxiliary building fuel handling and rail car bay/solid radwaste system areas ~~area~~ when operating all VAS supply AHUs and all VAS exhaust fans.	ii) A report exists and concludes that the calculated exhaust flow rate based on the measured flow rates is greater than or equal to ~~15,300~~ 10,300 cfm.
	iii) Testing will be performed to confirm the auxiliary building radiologically controlled area ventilation flow rate when operating all VAS supply AHUs and all VAS exhaust fans.	iii) A report exists and concludes that the calculated exhaust flow rate based on the measured flow rates is greater than or equal to 22,500 cfm.
* * *	* * *	* * *

2. **UFSAR Section 9.4, "Air-Conditioning, Heating, Cooling, and Ventilation System," Subsection 9.4.3.2.1.2, "Fuel Handling Area Ventilation Subsystem":**

   Revise Tier 2 information in the first paragraph, as follows:

   The fuel handling area ventilation subsystem serves the fuel handling area, rail car bay/filter storage area, resin transfer pump/valve room, spent resin tank room, waste disposal container area, WSS (spent resin) valve/piping area and elevator machine room. The fuel handling area ventilation subsystem consists of two 50 percent capacity supply air handing units of about ~~9,500~~ 4,900 scfm each, a ducted supply and exhaust air system, isolation dampers, diffusers, registers, exhaust fans, automatic controls and accessories. Hot water heating coils supplied with water from the hot water heating system (VYS) and cooling coils supplied with water from the central chilled water system (VWS) are used to maintain ambient room temperatures within the normal range. The ventilation airflow capacity is designed to maintain environmental conditions that support worker efficiency during fuel handling operations based on a maximum wetbulb globe temperature of 80°F (96°F drybulb) as defined by EPRI NP-4453 (Reference 22).

3. **UFSAR Section 12.2, "Radiation Sources," Table 12.2-24, "Parameters and Assumptions Used for Calculating Fuel Handling Area Airborne Radioactivity Concentrations":**

   Revise Tier 2 information in this table, as follows:

Parameter/Assumption	Value
Assumed fuel load	Full core offload
Ventilation flow through fuel handling area(1)	~~17,000~~ 9,000 cfm(2)
Iodine filter efficiency	0
* * *	* * *