LICENSEE EVENT REPORT (LER)

FACILITY NAME (1)	DOCKET NUMBER (2)	PAGE (3)
Diablo Canyon Unit 1	0 5 0 0 0 2 7 5	1 OF 15

TITLE (4) Engineered Safety Features Actuation System Outside Design Basis Due to High Energy Line Break Interaction With Solid State Protection System Circuits

EVENT DATE (5)			LER NUMBER (6)			REPORT DATE (7)			OTHER FACILITIES INVOLVED (8)	
MON	DAY	YR	YR	SEQUENTIAL NUMBER	REVISION NUMBER	MON	DAY	YR	FACILITY NAMES	DOCKET NUMBER (S)
2	1	95	95	- 0 0 1 -	0 1	6	5	96	Diablo Canyon Unit 2	0 5 0 0 0 3 2 3
										0 5 0 0 0

OPERATING MODE (9): 1

POWER LEVEL (10): 1 0 0

THIS REPORT IS SUBMITTED PURSUANT TO THE REQUIREMENTS OF 10 CFR: (11)

X 10 CFR 50.73(a)(2)(ii)(B)

____ OTHER -

(Specify in Abstract below and in text, NRC Form 366A)

LICENSEE CONTACT FOR THIS LER (12)

	TELEPHONE NUMBER	
	AREA CODE	
Donald H. Behnke - Senior Regulatory Services Engineer	805	545-2629

COMPLETE ONE LINE FOR EACH COMPONENT FAILURE DESCRIBED IN THIS REPORT (13)

CAUSE	SYSTEM	COMPONENT	MANUFACTURER	REPORTABLE TO NPRDS	CAUSE	SYSTEM	COMPONENT	MANUFACTURER	REPORTABLE TO NPRDS

SUPPLEMENTAL REPORT EXPECTED (14)		EXPECTED SUBMISSION DATE (15)	MONTH	DAY	YEAR
[ ] YES (If yes, complete EXPECTED SUBMISSION DATE)	[X] NO				

ABSTRACT (16)

On February 1, 1995, at 1025 PST, with Units 1 and 2 in Mode 1 (Power Operation) at 100 percent power, PG&E determined that a high energy line break (HELB) could result in the failure of one train of the solid state protection system (SSPS). The occurrence of the HELB coincident with a single active failure of the other SSPS train would result in the engineered safety features actuation system being outside plant design bases since two trains of SSPS would not be available to mitigate the consequences of the HELB. On February 1, 1995, at 1055 PST, a 1-hour, non-emergency report was made for Units 1 and 2 in accordance with 10 CFR 50.72(b)(1)(ii)(B).

The root cause is directly attributable to either vendor original design error or utility design review error. Contributory causes include: (1) vague industry and vendor electrical isolation criteria and (2) utility narrow scope of common mode failure review during Information Notice 91-11 review.

A design change has been implemented to provide electrical isolation between the SSPS direct contact input circuitry and the Class 1E power supplies. In addition, PG&E has verified that other postulated common mode failure review processes are programmatically correct. Engineering procedure improvements have been made since the time of the event that ensure critical review of equipment attributes to preclude implementation of changes resulting in vulnerability to common mode initiators.

1280S.DOC

I. Plant Conditions

Units 1 and 2 have been in various modes and at various power levels with the conditions described below.

II. Description of Problem

A. Summary

On February 1, 1995, at 1025 PST, with Units 1 and 2 in Mode 1 (Power Operation) at 100 percent power, PG&E determined that a high energy line break (HELB) could result in the failure of one train of the solid state protection system (SSPS)[JC]. The occurrence of the HELB coincident with a single active failure of the other SSPS train would result in the engineered safety features actuation system (ESFAS)[JE] being outside plant design bases since two trains of SSPS would not be available to mitigate the consequences of the HELB. On February 1, 1995, at 1055 PST, a 1-hour, non-emergency report was made for Units 1 and 2 in accordance with 10 CFR 50.72(b)(1)(ii)(B). Subsequent investigation has determined for Unit 1 only, that both trains of SSPS could have been rendered inoperable by a HELB for two circuit routing locations within the turbine building [NM]. Refer to Attachments 1 and 2 for a single line representation of the SSPS.

B. Background

Instrumentation and control (I&C) systems needed to mitigate the consequences of postulated accidents (i.e., the reactor protection system) are the reactor trip system (RTS)[JC], the ESFAS [JE], and the I&C power supply system [EF]. The RTS and ESFAS are functionally defined systems. Refer to Attachment 3 for a block diagram of the I&C systems utilized for the reactor protection system.

The RTS automatically initiates a reactor trip to limit the consequences of Condition II events (faults of moderate frequency such as loss of feedwater flow) by, at most, a shutdown of the reactor and main turbine [SB][TRB]. Various plant monitoring sensors [IO] consisting of two, three, or four redundant sensor channels provide input to the digital circuitry used to actuate the RTS. The RTS also contains the digital logic circuitry necessary to automatically open the reactor trip breakers [JD][BKR]. Power is supplied from the SSPS to the undervoltage coils [JD][SOL] of the reactor trip switchgear [JD][SWGR].

The ESFAS limits the consequences of Condition III events (infrequent faults). The ESFAS also acts to mitigate Condition IV events (limiting faults that include the potential for significant release of radioactive material). The primary functional requirement of the ESFAS is to receive input signals (information) from the various on-going processes within the reactor plant and containment, and to automatically actuate the various components and subsystems comprising the ESFAS. The ESFAS consists of two discrete portions of circuitry: (1) a plant parameter monitoring portion consisting of three or four redundant protection channels, and (2) two redundant logic trains that receive inputs from the protection channels [JE][CHA] and perform the needed logic to actuate the ESFAS. The intent is that any single failure within the ESFAS shall not prevent system actuation when required. The ESFAS has provisions for grouped manual initiation of the ESFAS functions from the control room. Manual actuation of individual components serves as backup to the automatic or grouped manual ESFAS initiation and provides selective control of the ESFAS.

Most inputs to the SSPS are processed through the process protection instrumentation system (Eagle 21)[JC] and the nuclear instrumentation system (NIS)[IG]. Other inputs are derived directly from process sensors by way of contacts (hereafter referred to as direct contact inputs) in the sensors. These direct contact inputs consist of oil pressure switches on the main turbine, auxiliary contacts on the reactor coolant pump (RCP) circuit breakers [AB][52], protective relaying devices in the 12 kV system [EA][RLY], limit switches on the main turbine stop valves [TA][ISV], and seismic sensors. The remaining inputs are from the radiation monitoring system (RMS)[IL], auxiliary contacts in the RTS switchgear, and from control switches located on the control board [NA][MCBD].

The NIS and Eagle 21 systems provide 120 VAC signals to the SSPS. These signals and the direct contact inputs enter the SSPS via input relays [JG][RLY]. When the SSPS input relays de-energize (fail-safe design), a digital signal is provided to the logic portion of the SSPS where the coincidence logic is performed. An exception is the containment spray system [BE] requires the input relays to be energized to initiate the function. The solid state logic operates master relays in the output bay of the SSPS. The master relay contacts, in turn, operate slave relays that actuate the ESFAS components.

Technical specifications (TS) require that both SSPS logic trains be operable. If one logic train is inoperable, each functional unit has an associated action statement. The applicable TS sections are 3/4.3.2, "Engineered Safety Features Actuation System Instrumentation," Table 3.3-3, functional units:

- 1.a, "Safety Injection - Manual Initiation,"
- 1.b, "Safety Injection - Automatic Actuation Logic and Actuation Relays,"
- 2.b, "Containment Spray - Automatic Actuation Logic and Actuation Relays,"
- 3.a.2), "Phase A Isolation - Automatic Actuation Logic and Actuation Relays,"
- 3.b.2), "Phase B Isolation - Automatic Actuation Logic and Actuation Relays,"
- 4.b., "Steam Line Isolation - Automatic Actuation Logic and Actuation Relays,"
- 5.a., "Turbine Trip and Feedwater Isolation - Automatic Actuation Logic and Actuation Relays," and
- 6.b., "Auxiliary Feedwater - Automatic Actuation Logic and Actuation Relays."

For all of the above, the action statements allow 6 hours to restore the inoperable channel to operable status or place the plant in Mode 3 (Hot Standby) within the following 6 hours. TS 3/4.3.1, "Reactor Trip System Instrumentation," allows the reactor trip breakers to be placed in bypass for up to 2 hours for surveillance testing.

C. Event Description:

In February 1991, Information Notice (IN) 91-11 was issued indicating Trojan had identified that their non-safety related direct contact SSPS inputs for RCP undervoltage/underfrequency [AB][27][81] were not isolated from safety related SSPS circuits. A common mode failure initiator (e.g., seismic event) could disable both trains of the ESFAS function of the SSPS.

In April 1991, PG&E issued Design Criteria Memorandum (DCM) S-38A, "Plant Protection System." A DCM open item documented the existence of non-safety related inputs to the SSPS that were not formally seismically qualified. The inputs consisted of the non-safety grade direct contact inputs as well as the source and intermediate range nuclear instrumentation. In October 1991, an "Engineering Evaluation of the Design Adequacy of the 12 kV System Inputs to the Plant Protection System" was issued to address the DCM S-38A open item and IN 91-11. This evaluation addressed the seismic adequacy of the 12 kV system cabinets (end devices) and associated single failure considerations, but did not adequately address the potential failure mode effects of the circuits within the conduits because the conduits [FA][CND] were installed as Class 1E (i.e., did not examine other potential common mode failure initiators that could affect the conduits or circuits).

On November 27, 1991, a nonconformance report (NCR) was issued to address the concern that formal documentation did not exist to demonstrate that a seismic event could not disable SSPS functions through the effects of the seismic event on certain non-safety grade SSPS direct contact inputs. Corrective actions for the NCR included a revised evaluation of IN 91-11, seismic analysis of the non-safety grade input devices and their enclosures, and an Updated Final Safety Analysis Report (UFSAR) change. Other non-seismic design basis accidents or events were not considered credible; however, a low priority followup (DCM open item) was assigned to investigate the potential seismic induced system interaction issue. Refer to Attachment 2, page 1, for a schematic representation of the affected inputs.

In December 1993, Revision 0 of DCM T-14, "Seismically Induced Systems Interactions (SISI)," was issued. An open item requested an evaluation to determine if the non-safety grade direct contact inputs to the SSPS should be included in the SISI target scope, based on the findings from the 1991 nonconformance on SSPS inputs. Walkdowns were initiated on January 5, 1995, to investigate the potential for SISI damage to the SSPS direct contact input circuits. From the SISI walkdowns it was concluded that any interactions potentially affecting the direct contact inputs and their electrical circuitry would not adversely affect the capability of the SSPS to perform its safety function. However, during the walkdown, an engineer questioned the vulnerability of these circuits to HELB damage due to a main steam line break (MSLB).

A subsequent HELB walkdown was conducted on January 25 and 26, 1995. On January 27, 1995, an engineer evaluating the results of the walkdown determined that the possibility existed that the jet or whip effects of a MSLB in the turbine building could result in the loss of one train of the SSPS. A double-ended guillotine break of a main steam line was postulated to occur at the turbine stop valve on the 140 foot elevation of the turbine building. This could result in the steam jet from the faulted main steam line striking electrical terminal boxes [ED][JBX]. However, only one electrical terminal box and consequently, only one train of SSPS, would be rendered inoperable by a given MSLB orientation. The electrical terminal boxes contain two SSPS instrument channels. These channels are inputs to the SSPS but were not electrically isolated from the Class 1E logic power supplies [JE][EF][JX] of the SSPS. Since the circuits were not isolated, a shorted circuit could cause the fuses [JE][EF][FU] for the SSPS Class I power supplies in two input cabinets to fail. The failure of the fuses for the Class I power supplies would disable the logic circuitry of one train of the SSPS, rendering the train inoperable. The other train would retain at least one operating power supply, leaving that train of ESFAS initiating circuitry operable. If a single active failure of the instrument

AC bus supplying power to the slave relays of the other SSPS train was also to occur, both trains of the SSPS would be rendered inoperable. No automatic actuation would be available to mitigate the consequences of the steam line break. However, the reactor would trip upon loss of the SSPS and a subsequent turbine trip would be generated by the RTS via the reactor trip breakers (RTB).

A multi-discipline group, consisting of design, licensing, and Westinghouse engineering personnel, was assembled to perform an engineering evaluation of these conditions. The engineering evaluation focused on the SSPS design and licensing basis, including credible single failures that must be assumed for a HELB in the turbine building as the initiating event. At this time, it was also identified that other SSPS circuit locations in the turbine building could be vulnerable to a HELB, and further walkdowns and evaluation were determined to be necessary.

On February 1, 1995, at 1025 PST, the Plant Staff Review Committee (PSRC) determined that a HELB could result in the failure of one train of the SSPS and enforcement discretion was requested. The occurrence of the HELB coincident with a postulated single active failure of the other SSPS train would result in both trains of the SSPS not being available to mitigate the consequences of the HELB. Both trains of the SSPS for both units were conservatively declared inoperable and preparations for an orderly dual unit shutdown were initiated as required by TS 3.0.3.

To complete a detailed understanding of the safety significance of other design basis initiating events that could also result in the loss of an SSPS train, including other piping configurations, an extensive engineering evaluation would have been required. PG&E determined that the more prudent action would be to request enforcement discretion action to correct the identified deficiencies, rather than delaying the corrective actions to complete the required engineering evaluations. The safety significance of this condition was determined to be low based on the low probability of the initiating HELB occurring coincident with a single failure of the other train of SSPS and on an initial Westinghouse analysis demonstrating that existing accident analysis assumptions were bounding. Therefore, an enforcement discretion request was made to allow continued operation with one train of the SSPS to be inoperable for longer than 6 hours and also to allow each RTB to be bypassed for system maintenance for longer than 2 hours. PG&E requested the NRC to exercise enforcement discretion for TS 3/4.3.1 and TS 3/4.3.2 starting at 1125 PST on February 1, 1995, and ending upon implementation of a design change to electrically isolate SSPS direct contact input circuits from the Class 1E SSPS

logic power supplies, to be completed no later than 1200 PST on February 5, 1995. Refer to Attachment 2 for a "before" and "after" representation of the modification.

At 1125 PST on February 1, 1995, the NRC granted verbal enforcement discretion conditioned upon receipt of a written request within 24-hours and subsequent NRC approval. Upon receipt of verbal approval of the enforcement discretion request, PG&E initiated actions to correct the condition as specified in the NRC enforcement discretion (see Section H).

The design changes to provide electrical isolation between the direct contact input circuitry and the Class IE SSPS power supplies, and associated post-modification testing, were completed on February 2, 1995, at 1455 PST for Unit 1 and on February 3, 1995, at 1259 PST for Unit 2.

Following the initial HELB assessment for these circuits, as part of the ongoing investigation into the safety significance of the loss of the SSPS due to a HELB, a more comprehensive effort was undertaken to evaluate past operability. Two other locations in the Unit 1 turbine building (at the 85 foot and 119 foot elevations) have main steam line and condensate lines in the vicinity of the direct contact input circuits. Three segments of main steam piping and two segments of condensate piping have a total of 10 possible, specific pipe breaks that had the potential to disable all four independent SSPS channels prior to completion of the corrective action design changes. The loss of all four channels would disable both SSPS trains of ESFAS initiation circuitry. The safety significance of this scenario was also low since existing UFSAR analyses were determined to be bounding. Due to differences in circuit routing in Unit 2, a single HELB cannot disable all four independent channels of the SSPS.

PG&E has investigated the overall implications of this inadequate isolation between circuits in the RTS and ESFAS to confirm that other common mode initiators were not present within the SSPS. In addition, other common mode initiating event programs that rely on adequate electrical isolation have been reviewed to ensure there are no generic concerns. These reviews included: HELB; environmental qualification program; SISI target scope; seismic qualification program; and the fire protection program. No similar problems with these programs were identified.

D. Inoperable Structures, Components, or Systems that Contributed to the Event

None.

E. Dates and Approximate Times for Major Occurrences

1. February 1, 1995, at 1025 PST: Event/discovery date: PG&E determined that a HELB could result in the failure of one train of SSPS.

2. February 1, 1995, at 1055 PST: A 1-hour, non-emergency report was made to the NRC in accordance with 10 CFR 50.72(b)(1)(ii)(B).

3. February 1, 1995, at 1125 PST: The NRC enforcement discretion period begins.

4. February 2, 1995, at 1455 PST: Unit 1 SSPS modifications were completed.

5. February 3, 1995, at 1259 PST: Unit 2 SSPS modifications were completed.

F. Other Systems or Secondary Functions Affected

The non-safety grade instrument air system [LF] may also be disabled by some of the postulated initiating HELBs. However, engineering reviews have been completed, and it has been verified that loss of the instrument air system would not have an adverse impact on any equipment credited with mitigating the consequences of the HELB.

G. Method of Discovery

The condition was identified during the investigation and plant walkdown of a design criteria issue for the SISI program. During the walkdown, the involved engineers questioned whether the potential SISI targets near the main steam line had been evaluated for HELB concerns. The results of the subsequent investigation identified that SSPS input circuits could be impacted by a main steam line HELB and, thereby, impact the operability of the SSPS.

H. Operator Actions

Both trains of the SSPS for both units were conservatively declared inoperable and preparations for an orderly dual unit shutdown required by TS 3.0.3 were initiated. Upon receipt of verbal approval of the enforcement discretion request by the NRC, PG&E exited TS 3/4.3.1 and TS 3/4.3.2. The following actions

were taken to provide additional assurance that the public health and safety would not be adversely affected during the period of the enforcement discretion until the deficiency was corrected.

1. The design change was performed on only one train of the SSPS at a time. This provided assurance that at least one train of SSPS would perform its required function to mitigate the consequences of most accidents.

2. Train-related maintenance and surveillance testing were suspended until the implementation of the design change.

3. High risk plant evolutions were avoided.

4. An operations shift order was prepared describing this condition and the proper implementation of the emergency procedure for responding to an MSLB that affects the SSPS.

5. A shift order was prepared to ensure the units would not be voluntarily reduced in power until the implementation of the design change was completed.

6. Activities on the 140 foot elevation of the turbine deck that could result in damage to the steam lines (such as movement of loads over the high pressure turbine) were restricted until implementation of the design change was complete.

I. Safety System Responses

None.

III. Cause of the Problem

A. Immediate Cause

PG&E determined that a HELB could result in the failure of at least one train of the SSPS.

B. Root Cause

The root cause of this event is unknown; however, the cause is directly attributable to either:

1. A Westinghouse design error regarding the SSPS electrical isolation of Class I to Class II circuit requirements (isolation of non-1E circuits).

2. A PG&E design error regarding the requirements for SSPS direct contact input criteria during initial design and construction.

C. Contributory Causes:

1. Industry standards in existence during initial design and construction (late 60's) were not well defined regarding electrical isolation criteria.

2. Westinghouse did not provide specific installation criteria regarding Class II direct contact routing and application for the SSPS.

3. PG&E did not have a program in place during initial design and construction to require a review of Class I components provided by qualified vendors regarding internal power distribution to ensure proper electrical isolation. PG&E relied upon accepted quality program reviews to identify problems rather than independent functional review.

4. PG&E programmatic deficiency regarding exemption criteria for engineering evaluation of HELB damage. PG&E assumed that internal power circuits provided by qualified vendors were properly isolated.

5. PG&E technical review group assembled to review SSPS direct contact inputs as a result of IN 91-11 restricted the scope of common mode failure investigation to input device qualification issues. However, a low priority followup (open item) was assigned to investigate the potential SISI issue. It was this low priority followup activity that identified the described deficiency.

IV. Analysis of the Event

The reactor trip function of the RTS is not affected by the conditions described in this LER, since the failure mode of the affected circuits is such that the RTS functions of reactor trip and turbine trip are initiated due to on an open or short circuit to ground condition.

In order to disable one train of the SSPS, either channels 1 & 2 (Train A) or channels 3 & 4 (Train B) would have to be simultaneously disabled by the same accident or condition. Loss of these channel pairs removes the 15 VDC and 48 VDC power for

the card logic and master relays. Since the master relays cannot be energized, the slave relays cannot be energized by automatic or grouped manual means.

Any time one train of the SSPS loses power in this manner, it would generate a reactor trip due to the complete loss of that train's 48 VDC power supplies. Loss of 48 VDC power to the reactor trip breaker causes it to trip open. Auxiliary contacts on the reactor trip breaker generate an immediate turbine trip.

The failure of both logic power supplies in one train of the SSPS would render the train inoperable. If a single active failure renders the other SSPS train inoperable or if both trains' power supplies are de-energized, a reactor trip and turbine trip would occur as described above (due to fail-safe design), but no automatic equipment actuation would be available to mitigate the consequences of the MSLB.

Westinghouse Evaluation

Westinghouse has performed an evaluation using NRC-accepted methodologies to determine the results of an MSLB downstream of the main steam isolation valves (MSIVs) with both trains of the SSPS inoperable. The evaluation is based on the following assumptions, which are consistent with the analysis in UFSAR, Chapter 15:

1. A double-ended rupture of a main steam line resulting in an effective break size of 5.6 sq-ft (1.4 sq-ft per steam generator (SG)[AB][SB], which corresponds to the total effective flow area of the flow restrictor [SB][OR] in each SG).
2. Initial plant conditions of hot zero power to maximize the volume of water in the SGs and minimize initial stored energy in the reactor coolant system [AB].
3. End-of-life reactivity conditions.
4. No decay heat.
5. All control rods [AA] fully inserted with the exception of the most reactive rod fully withdrawn.
6. No operator action.
7. No automatic equipment actuation with the exception of the passive actuation of the safety injection (SI) accumulators [BP][ACC].
8. 100 percent power nominal main feedwater [SJ] flow.
9. Maximum auxiliary feedwater (AFW)[BA]flow.

The results of the evaluation indicate that even though the reactor does return to power, the departure from nucleate boiling (DNB) design limits are not exceeded and the current UFSAR licensing basis MSLB core response analyses remains bounding. The magnitude of the return to power is comparable to the UFSAR case. Although

the cooldown evaluated was greater than that in the design basis MSLB, the cooldown is symmetrical with respect to core response resulting in less severe DNB conditions. No operator action is required in the first 10 minutes to mitigate the accident.

Westinghouse also performed an evaluation of the effect of the transient on pressurized thermal shock (PTS) and concluded the increased cooldown had no appreciable effect on PTS risk.

Further investigation by PG&E, subsequently revealed that a steamline break or condensate pipe break elsewhere in the turbine building could disable both trains of the SSPS. Since the loss of all ESFAS protection is a consequence of the pipe rupture, a single active failure must still be considered for the past operability evaluation.

For the steamline break scenario, the only accident mitigation credited in the recently analyzed zero power steamline break (as described above) is the actuation of the cold leg accumulators. The cold leg accumulators compensate for the absence of SI since the high concentration of boron injected from the accumulators terminates any further increase in power almost immediately upon injection. The accumulators are passive safety features that, based on the isolation valves being open with power removed in accordance with TSs, have been excluded from consideration of an active failure. Therefore, the only other applicable single failure would be spurious operation of a powered component due to a failure originating within its automatic actuation or control systems when called upon for operation. The recent zero power analysis assumes blowdown of all four SGs which yields a uniform temperature distribution in the core, resulting in less-limiting peaking factors, and thus, a less-limiting DNB value than the MSLB analyzed in the UFSAR .. Spurious closure of one of the MSIVs would slightly skew the temperature distribution, resulting in increased peaking factors. However, closure of the MSIVs would be an unlikely passive failure and; therefore, the MSIVs are assumed to remain open as a consequence of the initiating event. The UFSAR analysis remains bounding.

If one or more MSIVs were to close at the time of accident initiation (i.e., due to operator action, spurious operation, etc.), a less severe cooldown would result, which would help offset the reduction in event symmetry. Based on Westinghouse engineering judgment, analysis of this type of scenario would produce results on the same order of magnitude as the UFSAR and recent zero power analyses. The resulting cooldown and depressurization would be bounded by the recent zero power analysis since all four loops were assumed to blow down. The event asymmetry would be bounded by the UFSAR analysis where the reactivity excursion is weighted to one quadrant of the core. If at some point during the four loop blowdown scenario

any of the MSIVs were to close, a reduction in the event symmetry would result. However, the UFSAR analysis would remain bounding since the limiting asymmetric condition (i.e., one SG blowdown) is assumed from event initiation. Any delay in reaching this asymmetric condition would result in a less severe temperature distribution in the core.

A condensate break outside containment in the turbine building is upstream from the feedline check valves [KA][V]. The resulting transient is similar to a loss of normal feedwater that has been previously analyzed for Diablo Canyon Power Plant (DCPP) in the UFSAR, Chapter 15. However, only Condition IV criteria must be satisfied since the event initiates with a feedline (or condensate) pipe rupture. Two scenarios were considered: (1) the pipe break disables SSPS at event initiation, and (2) the pipe breaks and loss of the SSPS is delayed until the low-low SG reactor trip setpoint is reached.

For the first feedline break scenario, the combined effect of reactor trip at event initiation and the location of the break would result in additional SG inventory available for long-term decay heat removal. The current UFSAR does not credit AFW flow until operator action is taken at 10 minutes following reactor trip. Therefore, operator action could be credited to start one motor-driven AFW pump [BA][MO][P] at 10 minutes following event initiation, which is the same as that assumed in the UFSAR case. No single failure has been identified that can result in loss of both motor-driven AFW pumps. Based on engineering judgment, and the fact that for a feedline break upstream of the check valves, SI and steamline/feedline isolation are not required, the additional SG inventory available offsets the absence of the SSPS. Since no other safety features are credited in the feedline break analysis for accident mitigation, there is no single active failure that can adversely affect the analysis, and the current licensing basis feedline break analysis remains bounding.

For the feedline break scenario where SSPS failure occurs simultaneously with a low-low SG level reactor trip signal, the additional SG inventory would not be available. The resulting transient is essentially a loss of normal feedwater without automatic actuation of AFW flow. Sensitivity calculations were performed assuming no AFW flow until operator action is taken to initiate one motor-driven AFW pump at 10 minutes following reactor trip. The results demonstrate that the core remains covered with water and no hot leg boiling occurs prior to event turnaround. Condition IV criteria specific to the feedline break event are satisfied for both with and without offsite power cases. There is no single active failure that can adversely affect the analysis, since no automatic safety features are credited for accident mitigation.

Simulator Response/Operator Action

The MSLB with a loss of both SSPS trains and no operator action was modeled on the DCPP simulator. The results of the simulator run indicated no return to power during the MSLB, which indicates margin beyond the more conservative Westinghouse analysis. The plant response from the simulator run was reviewed by several licensed operators to determine their response to the event. They indicated that they would identify the need for an SI and manually align the plant for SI within a few minutes after the event given the existing guidance in the emergency operating procedures. Manually aligning the plant for SI includes MSIV closure. MSIV closure would terminate the event since the break is downstream of the MSIVs. Additionally, operator simulator training includes events with loss of automatic ESFAS capability.

Conclusion

There is no single active failure that can adversely affect the analysis of a HELB in the turbine building that disables both trains of the SSPS since no active functions were credited for accident mitigation. Therefore, the Westinghouse evaluation recently performed for the zero power scenario shows that the existing UFSAR accident analysis criteria continue to be met, and the postulated scenario did not present an undue risk to the public health and safety.

V. Corrective Actions

A. Immediate Corrective Actions

1. A design modification was installed to provide electrical isolation between the SSPS direct contact input circuits and the Class 1E logic power supplies. Refer to Attachments 1 and 2.

2. An integrated problem response team (IPRT) was formed to perform a confirmatory review of the adequacy of the DCPP design basis. The scope of this review was as follows:

   a) Verify that appropriate isolation exists at system level interfaces for the SSPS inputs, outputs, and logic.

   b) Review other programs that rely on electrical isolation to ensure that the potential impact on each of these programs due to lack of electrical isolation is of low safety significance.

B. Corrective Actions to Prevent Recurrence

1. PG&E has conducted an extensive review of the existing Class 1E electrical circuit isolation inside vendor provided equipment and interconnection points with utility designed electrical systems. No additional electrical isolation concerns were identified. PG&E has reviewed the programs and procedures presently in use for future designs and/or vendor provided equipment, and concluded that these programs are adequate to ensure proper electrical isolation is provided as required by DCPP design and licensing basis.

2. Due to the subtle interaction between programs that assume electrical isolation and programs that directly address circuit design, PG&E has revised procedure CF3.ID9, "Design Change Package Development," technical guidance. This revision includes a discussion of the importance of electrical isolation and separation requirements utilized for DCPP to reinforce management expectations regarding design and review activities. A reference to the NCR for this event is also included.

VI. Additional Information

A. Failed Components

None.

B. Previous LERs on Similar Problems

LER 1-83-037, "Portion of Low Temperature Overpressure Protection Circuitry Improperly Separated Due to Design Error," identified a condition wherein an upgrade design installation failed to provide the required circuit separation. Corrective actions to prevent recurrence included a review of other Westinghouse supplied panels which contained mutually redundant circuits that were modified by PG&E without a vendor review, clarification of separation requirements, and issuance of a memorandum to appropriate electrical engineers and drafters regarding separation and isolation criteria. The root cause of this event was determined to be personnel error associated with misinterpretation of current separation criteria applicable to upgrade design changes. The corrective actions taken for this event would not have prevented this LER due to the review which focused on the PG&E modification processes and work performed after delivery of vendor supplied equipment.

SSPS 120 VAC POWER DISTRIBUTION
BEFORE DESIGN CHANGE

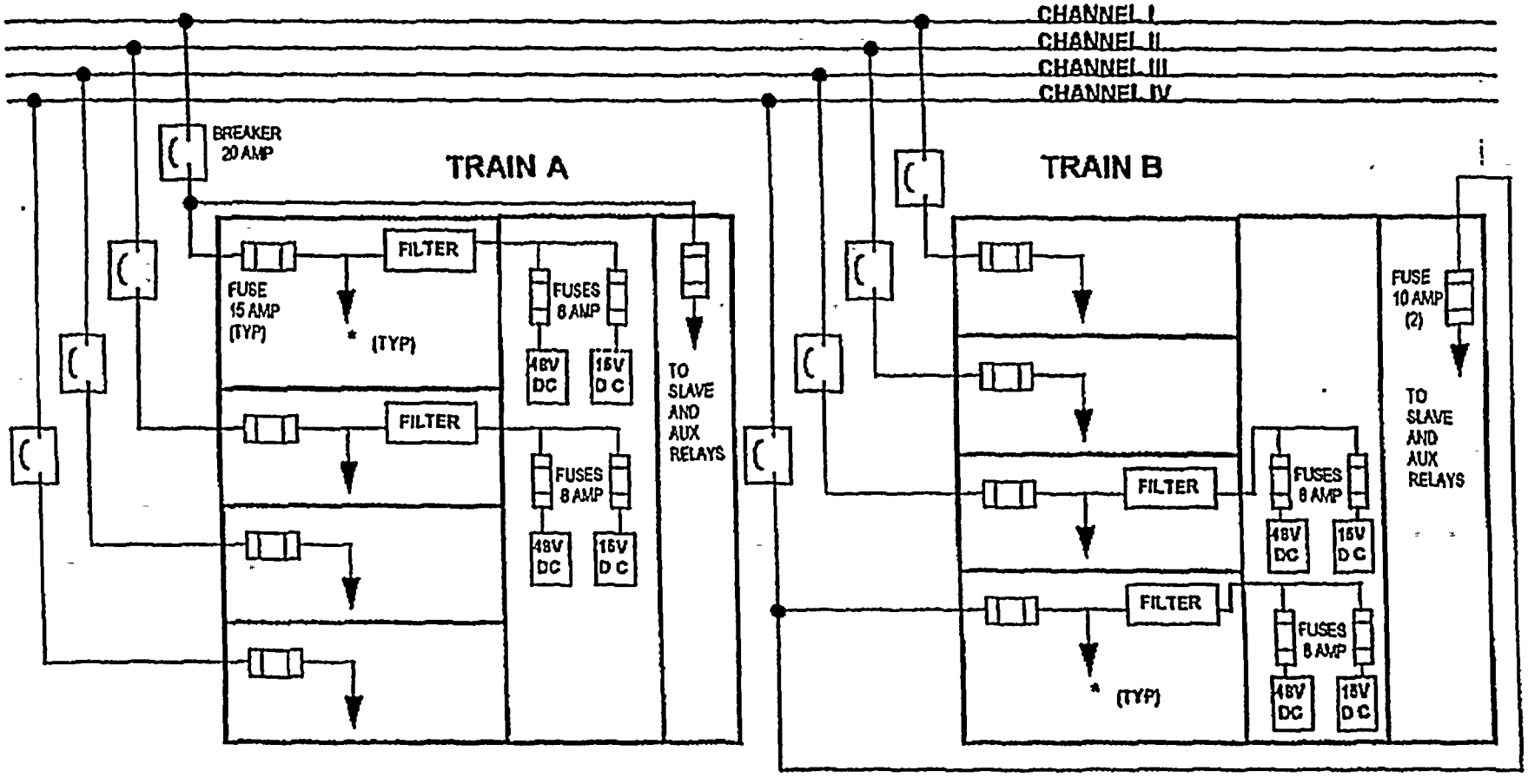

* DIRECT CONTACT INPUTS REFER TO ATTACHMENT NO. 2

SSPS 120 VAC POWER DISTRIBUTION
AFTER DESIGN CHANGE

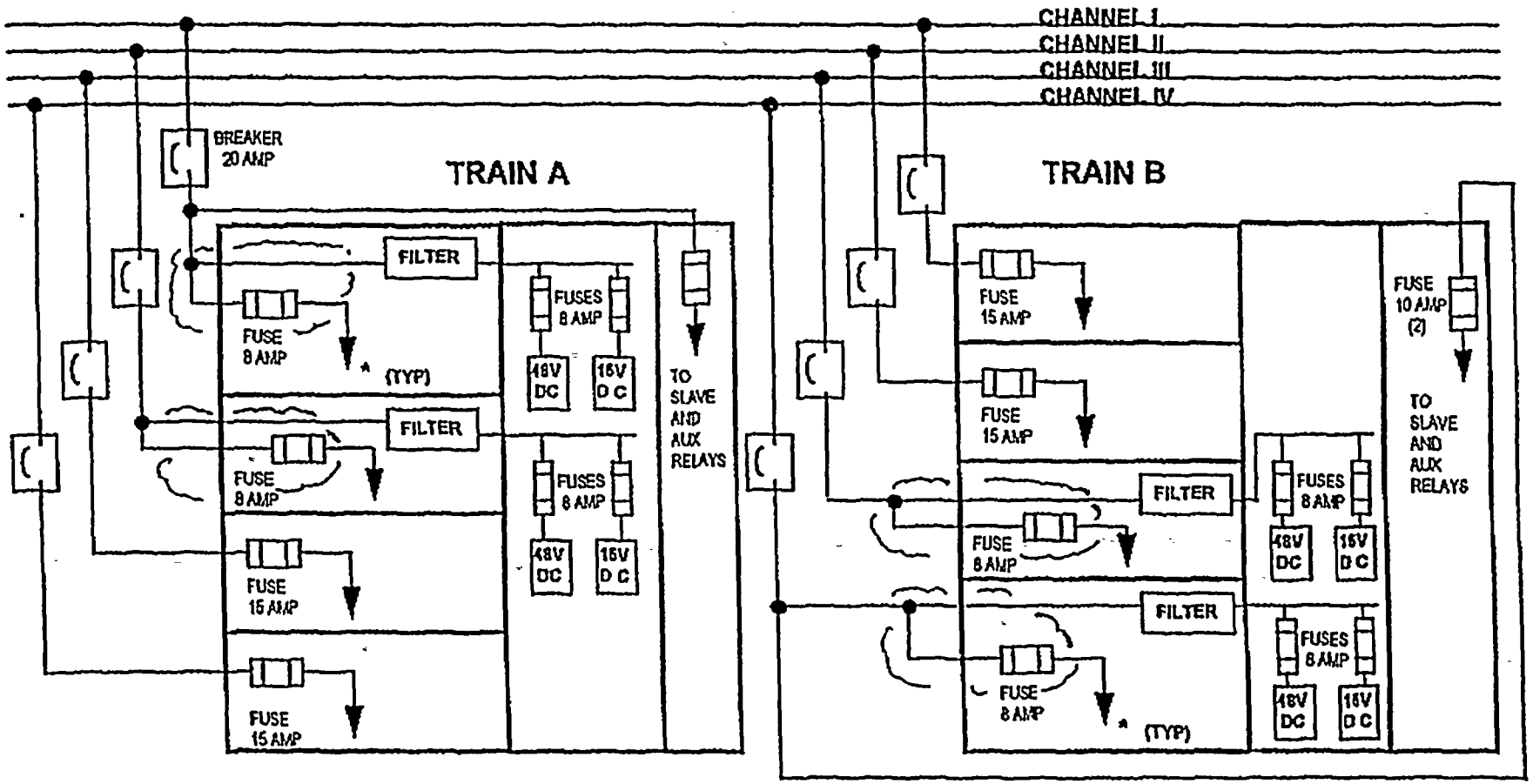

* DIRECT CONTACT INPUTS REFER TO ATTACHMENT NO. 2

SSPS, TRAIN A, CHANNEL 1
SIMPLIFIED SCHEMATIC DIAGRAM OF DIRECT CONTACT INPUTS
BEFORE DESIGN CHANGE

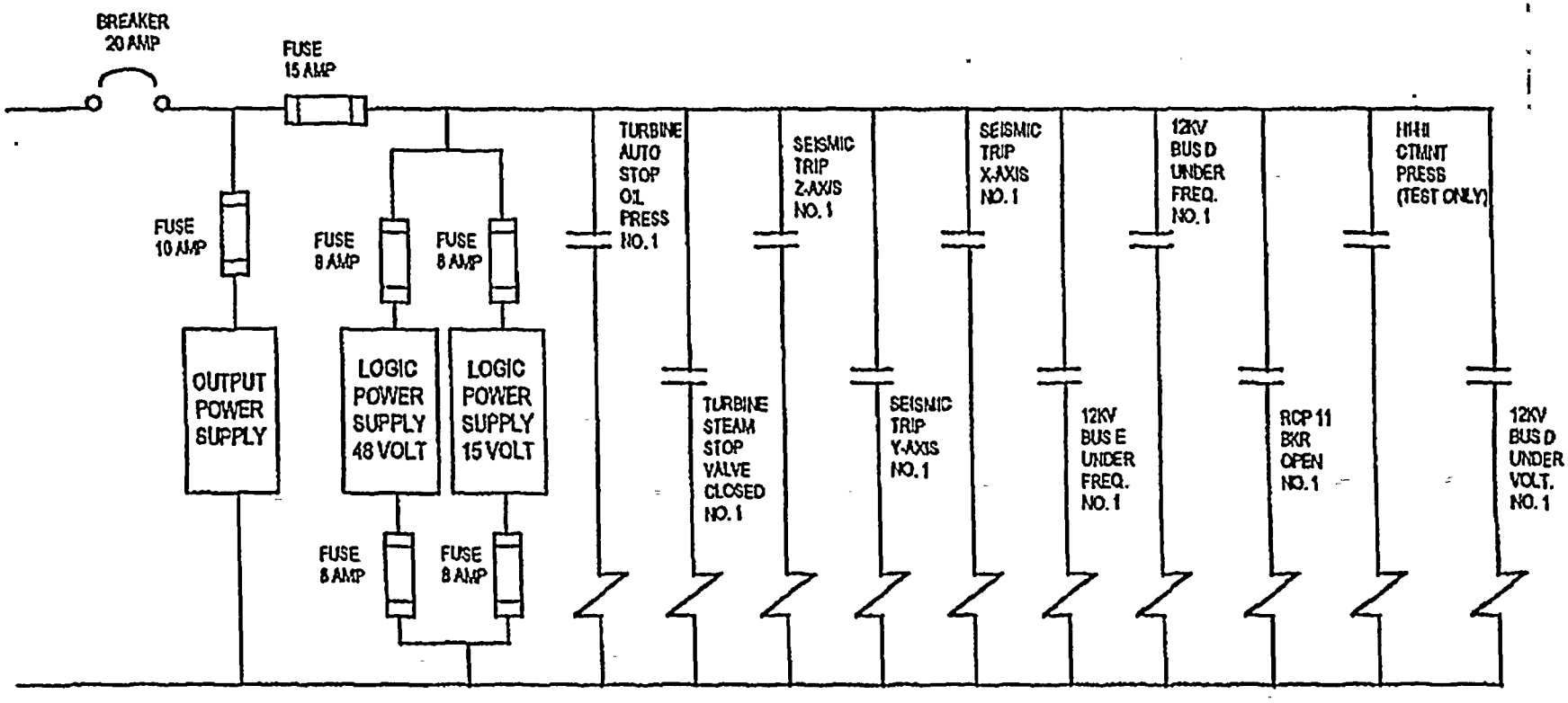

SSPS, TRAIN A, CHANNEL 1
SIMPLIFIED SCHEMATIC DIAGRAM OF DIRECT CONTACT INPUTS
AFTER DESIGN CHANGE

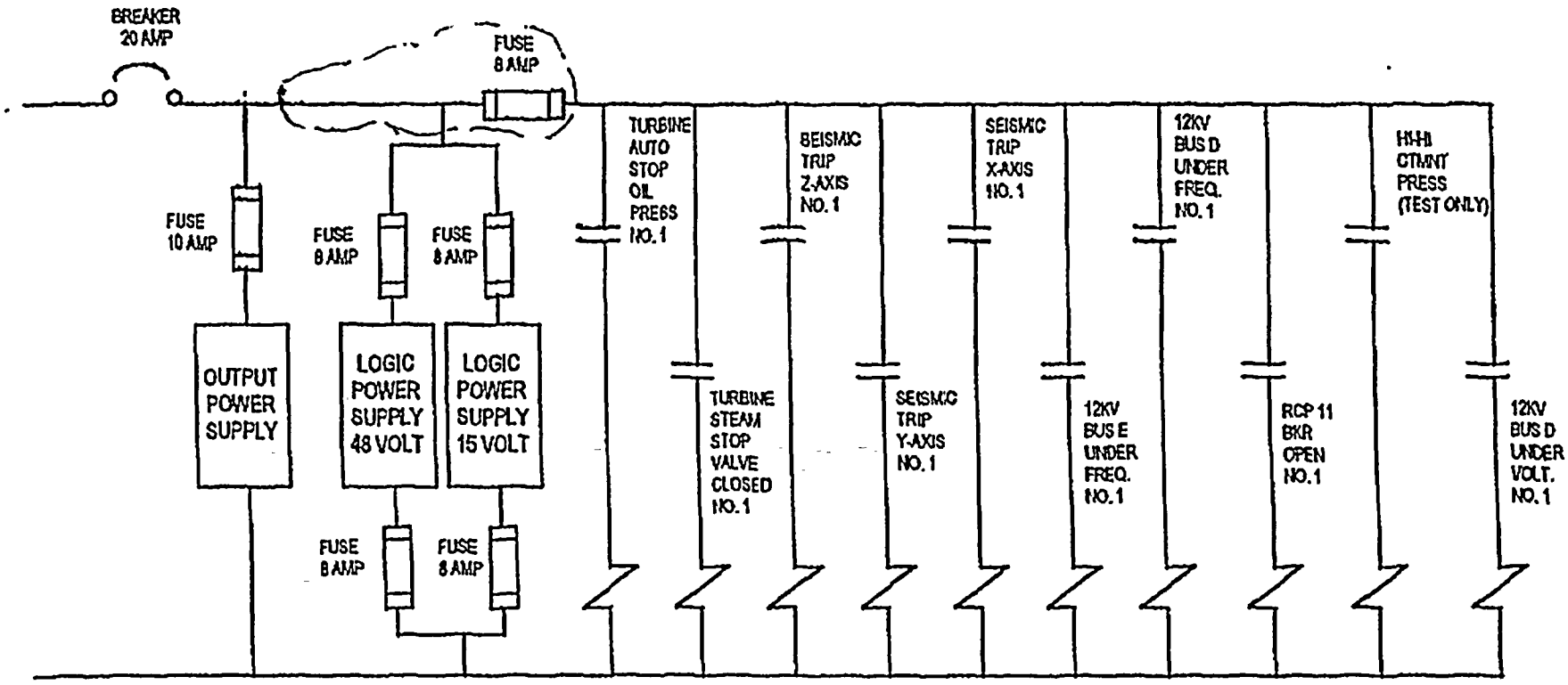

REACTOR PROTECTION SYSTEM