ENCLOSURE

U.S. NUCLEAR REGULATORY COMMISSION
REGION IV

Inspection Report: 50-275/95-17
50-323/95-17

Licenses: DPR-80
DPR-82

Licensee: Pacific Gas and Electric Company
77 Beale Street, Room 1451
P.O. Box 770000
San Francisco, California

Facility Name: Diablo Canyon Nuclear Power Plant, Units 1 and 2

Inspection At: Diablo Canyon Site, San Luis Obispo County, California

Inspection Conducted: October 21 through December 8, 1995

Inspectors: D. Acker, Project Inspector
J. Russell, Acting Senior Resident Inspector
L. Smith, Reactor Inspector
A. Singh, Fire Protection Specialist, NRR

Approved: for JRDyer 12/29/95
H. J. Wong, Chief, Reactor Projects Branch E Date

Inspection Summary

Areas Inspected (Units 1 and 2): Special, announced inspection of the causes, immediate response, and corrective actions for the failure of Unit Auxiliary Transformer 1-1 on October 21, 1995. Operators attempted to energize a 12 kilovolt (kV) bus with a ground buggy installed, resulting in a transformer failure, loss of offsite power, momentary loss of shutdown cooling, loss of spent fuel pool cooling, and damage to offsite power supply components.

Results (Units 1 and 2):

Operations and Maintenance - Event

- Operator and site management response to the loss of offsite power and transformer failure was generally good (Section 3.1).
- Operations and maintenance personnel failed to properly plan and implement procedures for the installation and removal of a ground buggy

in the 12 kV cubicle location of Circuit Breaker 52-VD-4. This was an apparent violation of Technical Specification 6.8.1 and applicable site procedures (Section 6.2).

- Licensee management had not been enforcing compliance with established procedures for ground buggy installation. The licensee had established several procedures and mechanisms in an attempt to control the installation and removal of ground buggies, but the controls were not being followed (Section 6.3).

- The licensee determined that neither the operations nor maintenance departments felt responsible for ground buggy control. The licensee considered that this lack of ownership was the major cause of the event (Section 6.3).

- Licensee management had an opportunity to correct grounding device control problems after an occurrence in October 1994, but interface problems between the operations and maintenance departments prevented either from effectively resolving the matter. Instead, the licensee added another procedure requirement onto those already in existence that did not address the root cause of the problem (Section 6.4).

- Licensee personnel determined that fatigue contributed to the maintenance foreman's error. He performed a walkdown of the 12 kV switchgear prior to reporting off the clearance and did not identify that the ground buggy was still installed (Section 6.6).

- After offsite power was lost, operations personnel did not restart spent fuel pool cooling for 8 hours, resulting in a 20°F rise in pool temperature. Cooling was restarted during operator rounds well before any temperature limits were approached (Section 3.3).

- Licensee management routinely authorized Technical Maintenance Section personnel to work more than 72 hours in a 7-day period. In many cases, full crews repeatedly received approval to exceed the guidelines. This is an apparent violation of Technical Specification 6.2.2.f (Section 6.6).

- A licensee procedure designated numerous managers to sign plant manager approval of overtime extensions, which may have contributed to routine use of extended overtime (Section 6.6).

<u>Operations and Maintenance - Corrective Actions</u>

- The licensee's root cause evaluation was generally thorough and complete (Section 6.1).

- On an interim basis, licensee personnel revised the administrative controls for the installation and removal of ground buggies (Section 6.2.8).

- Licensee personnel planned to improve the tags, labels, and terminology used for the control of ground buggies (Section 6.5).

Engineering

- Corrective actions, analyses, and tests to verify equipment operability after the event were comprehensive and conservative (Section 4.1).

Plant Support

- The transformer yard arrangement and the fire protection features for the transformers, yard area, and turbine building walls were in accordance with the Updated Final Safety Analysis Report.

- Fire brigade training, procedures, and response to the fire were good (Section 5.4).

- While the fire was still burning in Unit Auxiliary Transformer 1-1, site personnel improperly blocked a drain resulting in an oil/water pool in part of the transformer area which included stored compressed oxygen bottles (Section 5.3).

- Transformer fire protection equipment was installed in accordance with design requirements (Section 5.2).

Summary of Inspection Findings:

- An apparent violation of Technical Specification 6.8.1 (six examples), related to failures to follow procedures, is identified in Sections 6.2.

- An apparent violation of Technical Specification 6.2.2.f, related to overtime requirements, is identified in Section 6.6.

- An Inspector Followup Item, related to further evaluation of transformer capability to withstand electrical faults, is identified in Section 4.3.

Attachments:

- Attachment 1 - Persons Contacted and Exit Meeting
- Attachment 2 - Acronyms
- Attachment 3 - Diablo Electrical Distribution Block Diagram
- Attachment 4 - Diablo Unit 1 Transformer Area Arrangement Diagram

DETAILS

1 BACKGROUND

1.1 Overview of Failure of Unit Auxiliary Transformer 1-1

On Saturday October 21, 1995, at 9:38 a.m. (PDT) Unit Auxiliary (UA) Transformer 1-1 exploded and caught on fire, causing the subsequent loss of all offsite power to Unit 1, which was shutdown in Mode 6 for a refueling outage. At the time, power was being provided via backfeed through the main transformers and UA transformers, while maintenance was being performed on standby startup (SU) transformers. Fuel assemblies had been reinstalled into the reactor vessel and the reactor vessel head was installed, but not tightened. Nozzle dams were installed and steam generator eddy current inspections were in progress. Shutdown cooling was operating. When offsite power was lost, all three emergency diesel generators (EDGs) started and loaded to their respective busses. Operators reestablished shutdown cooling within 2 minutes of losing offsite power. Spent fuel pool cooling was restored approximately 8 hours after the event, but before any temperature alarms were reached. The licensee declared an Unusual Event at 9:51 a.m. (PDT) due to loss of offsite power and the fire, for which they requested offsite fire fighting support. The fire was extinguished by 10:10 a.m. (PDT) Offsite power was restored approximately 16 hours later through the SU transformers. Unit 2 continued to operate at 100 percent power and plant operation was not affected by the event.

1.2 Electrical Design

Diablo Canyon has two sources of offsite electrical power, a 230 kV system and a 525 kV system, as shown in Attachment 3. The 230 kV system supplies Unit 1 230/12 kV SU Transformer 1-1 and Unit 2 230/12 kV SU Transformer 2-1. SU Transformer 1-1 supplies Unit 1 startup and emergency power to nonsafety-related loads such as the reactor coolant pumps and circulating water pumps and to safety-related loads via 12/4 kV SU Transformer 1-2. SU Transformers 2-1 and 2-2 supply similar loads in Unit 2. The output of SU Transformers 1-1 and 2-1 can be provided to the opposite unit during an emergency situation via a cross-tie circuit breaker. During power operation the 230 kV system is normally unloaded.

The second source of emergency power, the 525 kV system, is backfed from the 525/25 kV main transformers after the main generator is separated from the system. The 525 kV supply is a delayed source, since operator action is required to restore this power following loss of the main generator. All Unit 1 loads are normally supplied by the main generator during power operations through 25/12 kV UA Transformer 1-1, which supplies nonsafety-related loads, and 25/4 kV UA Transformer 1-2, which supplies safety-related loads. Unit 2 operation is the same through UA Transformers 2-1 and 2-2. After a reactor trip, power is automatically fast transferred to the 230 kV SU system.

All the Unit 1 transformers, Unit 2 SU Transformer 2-1, and two spare transformers are located north and northeast of the turbine building, as shown in Attachment 4. The transformer area, or yard, contained no missile shields, and no individual oil pits. The yard design for a loss of transformer oil event was for the oil to flow away from the transformers by gravity approximately 100 feet north where it would drain to an underground separator, designed to retain the oil from an oil/water mixture.

2 SEQUENCE OF EVENTS

The 525 kV system was supplying power to Unit 1 loads, while the SU system was deenergized for maintenance. Operations personnel were preparing for filling the reactor coolant system in anticipation of completion of steam generator eddy current inspections. One of the next steps was to restore power to the 12 kV busses so that uncoupled reactor coolant pump motor runs could be completed. After completing the 12 kV bus work, maintenance personnel turned the busses over to operations; however, due to a number of errors discussed in detail in Section 6 of this report, licensee personnel left a grounding device installed on 12 kV Bus D. The grounding device was a "ground buggy," which consisted of an empty breaker frame with stabs connected to the ground by 4/0 size cables. The licensee installed ground buggies in the cubicle locations of removed circuit breakers to facilitate maintenance, testing, and personnel safety during electrical system outage periods.

At 9:38 a.m. (PDT), operators attempted to energize 12 kV Bus D from UA Transformer 1-1 by closing the input Circuit Breaker 52-VD-8 with the ground buggy still installed on Bus D. Circuit Breaker 52-VD-8 closed and tripped, UA Transformer 1-1 exploded and caught fire, and the Unit 1 525 kV supply breakers in the switchyard tripped, causing loss of all offsite power to Unit 1. All three EDGs started and loaded. Operators restored shutdown cooling within 2 minutes. Fire alarms indicated a fire in the Unit 1 switchyard. At approximately 9:51 a.m. (PDT), the licensee declared an Unusual Event due to loss of offsite power and the transformer fire. The fire brigade responded to the fire and offsite fire fighting support was requested. The UA Transformer 1-1 explosion released approximately 3400 gallons of oil on to the ground and on adjacent transformers. The transformer yard water deluge system remained sufficiently intact to extinguish the fire external to UA Transformer 1-1; however, the oil and combustible material within the transformer continued to burn. The oil/water mixture flowed north to the drain; however, licensee personnel not familiar with the drain design, thought the oil was flowing directly into a creek. These personnel blocked the drain, and the oil/water mixture backed up in the transformer yard. The mixture did not reach the SU transformers which were on slightly higher ground. The fire continued to burn within UA Transformer 1-1 until approximately 10:10 a.m. (PDT), when the fire brigade completely extinguished the fire using foam.

The licensee discontinued work on the Unit 1 SU system and began restoration of this source of offsite power. Offsite power began to be restored to Unit 1

via the SU system on October 22, 1995, at approximately 12:22 a.m. (PDT). The EDGs were secured and the Notice of Unusual Event was terminated at approximately 1:29 a.m.

3 OPERATIONS RESPONSE

3.1 Overview

Based on observations in the control room and other plant locations immediately after the event, the inspectors concluded that overall licensee response to the event, both by operators and support organizations, was appropriate. Licensee management, including the Operations Manager and Plant Manager, responded to the site and actively participated in assessing and planning plant recovery activities. However, the inspectors identified several associated weaknesses which are discussed in the following sections.

3.2 Initial Response

The Resident Inspectors were notified of the declaration of an Unusual Event and the transformer fire, by the Shift Superintendent, and arrived at the site at approximately 10:30 a.m. (PDT), October 21, 1995. The inspectors observed licensee actions in the control room, walked down the transformer area shortly after the fire had been extinguished, attended licensee engineering assessment team meetings as the licensee developed plans for plant recovery, and periodically walked down the operating EDGs. The Acting Senior Resident Inspector remained on site until the Shift Supervisor terminated the Notice of Unusual Event at 1:29 a.m. (PDT), October 22, 1995, when offsite power was restored and the EDGs were placed in standby.

3.3 Operator Actions

Overall, the inspectors concluded that operators properly responded to the event with restoration of shutdown cooling performed promptly and a deliberate approach taken for restoration of offsite power.

The inspectors noted that the operating residual heat removal pump and the operating spent fuel pool (SFP) cooling pump both stopped when offsite power to the 4160 V Class 1E buses was lost. These pumps are not automatically powered from the EDG buses since there was no engineered safety feature signal present. The status of the resident heat removal pump was indicated in the control room; however, there was no indication for the SFP cooling pump. When power was restored via the EDGs, the operators restarted the residual heat removal pump within 2 minutes to reestablish shutdown cooling. However, the operators did not restart the SFP cooling pump until 8 hours after the initial loss of power during operator rounds. The inspectors noted that the only indication of SFP cooling in the main control room was one annunciator, which alarms on high SFP temperature or low level. These conditions were not reached during this event.

The licensee's review of the event noted the failure to promptly restart the SFP cooling pump and the licensee initiated action to train personnel on the need to restart this pump when power was lost. The inspectors reviewed the associated procedures and noted that the procedure initially entered by the operators for a loss of shutdown cooling, Procedure OP-SD-0, "Loss of, or Inadequate Decay Heat Removal," Revision 5, did contain procedural guidance to restart SFP cooling. In fact, the operators had followed the procedure, but exited the procedure prior to encountering the step (Step 6) that would have directed them to restart the SFP cooling pump. This was because Step 5 directed the operators to transition to a loss of residual heat removal recovery procedure and, once residual heat removal was restored, to exit the shutdown emergency operating procedures, of which Procedure OP-SD-0 was a part. Licensee personnel indicated that operators had remembered to restart the SFP cooling pump, but personnel were responding to the transformer fire and could not respond to restart the pump. During operator rounds later in the event, an operator restarted the SFP cooling pump.

The inspectors discussed the issue with the licensee and noted that the licensee had not determined that a procedural flow problem had caused operators not to start the SFP cooling pump in a timely manner. The licensee indicated that they would revise Procedure OP-SD-0 to incorporate the SFP cooling restart prior to the transition out of Procedure OP-SD-0. The inspectors considered that the licensee's review of the failure to immediately restart SFP cooling was incomplete, in that it did not identify the procedure problem noted by the inspectors.

The inspectors concluded, based on interviews and procedural review, that the operators did not restart the SFP cooling pump for an extended period due to the procedural flow problem discussed above, lack of specific control room indication, and failure of personnel to remain cognizant of the need to restart the pump. The inspectors noted that the SFP temperature increased from 92°F to 112°F, with the annunciator setpoint at 130°F. Based on these temperatures and annunciator availability, the inspectors concluded there was not impact on plant safety. The licensee was also evaluating adding annunciation of low SFP cooling pump discharge pressure to the main control boards. The inspectors concluded that the licensee's response was adequate.

3.4 Emergency Operating Procedures

The inspectors noted that Emergency Operating Procedure ECA 0.3, "Restore 4 kV Buses," Revision 6, for restoration of offsite power while operating on the EDGs, stipulated starting transformer cooling prior to energizing a transformer. With the nonvital buses deenergized, transformer cooling was not available until after the transformer and appropriate load center were energized. The licensee determined that it was acceptable to run the transformer for a short period without cooling until transformer cooling was made available. The licensee made approved pen and ink changes to the procedures, which were implemented to restore offsite power. The licensee is in the process of revising both units' emergency operating procedures to incorporate a new abnormal procedure, developed as a result of the event, that

would provide specific guidance. The inspectors concluded that the licensee's independent assessment and corrective actions to restore offsite power were excellent.

The inspectors also noted that Procedure OP AP SD-1, "Loss of AC Power," Revision 6A, (one of the shutdown emergency operating procedures) directed implementation of Procedure OP J6 A:1, "4160 Volt System - Make Available," Revision 6, which would also not work as written unless power was already available for various loads including transformer cooling. However, Procedure OP AP SD-1 was written for a station blackout in Modes 5 or 6, during which no AC power would be available other than that provided by the station batteries. In response to this concern, the licensee agreed to change this procedure to ensure that appropriate initial conditions were considered. The inspectors concluded that the licensee's actions were adequate.

The inspectors noted that the pen and ink changes were minor and the licensee was acting conservatively. Consequently, the weaknesses of existing procedures were considered to be procedure enhancement issues.

3.5 Control Board Breaker Position

The inspectors noted that some control room red breaker closed light bulbs did not illuminate subsequent to the event as the operator closed breakers while restoring power to Unit 1. Over half of the light bulbs had burned out, apparently during the event, and the operator had to replace bulbs as he restored power. The inspectors considered that inconsistent breaker position indication was not conducive to ensuring proper operator actions and correct switch manipulation. The number of burned out light bulbs indicated a potential common cause problem with the indication system design on a loss or restoration of power. Based on the inspectors' concern, the licensee was evaluating this problem at the end of the inspection period.

4 ELECTRICAL SYSTEM REVIEW AND EVALUATION

4.1 Overview

The licensee concluded that: (1) UA Transformer 1-1 was not designed to withstand a bolted secondary fault; (2) all damaged equipment was associated with the transformer explosion and fire; and (3) protective relays operated as designed. The inspectors reviewed the licensee's evaluations and concluded that the licensee's analyses were appropriate and technically sound.

The inspectors independently observed damaged equipment and witnessed licensee repairs and tests. The inspectors concluded that the licensee had performed a thorough and conservative review of equipment potentially affected by the event.

4.2 Licensee Engineering Analysis and Corrective Actions

The licensee performed a review of electrical data from the event. The initial fault was seen on the 525 kV system as a current of approximately 570 amps, which was approximately 24,000 amps at 12 kV. This current attained a value of approximately 6000 amps on the 525 kV system at approximately 1.7 cycles into the event. Switchyard breakers on the 525 kV side of the main transformers cleared the fault in less than five cycles.

Initial licensee inspections of 12 kV Bus D, ground buggy, and associated electrical equipment indicated no damage. The licensee stated that the momentary withstand current of 12 kV Bus D was 60,000 amps. The licensee stated that the recordings indicated that UA Transformer 1-1 sustained primary-to-ground faults at 1.7 cycles, which essentially interrupted the fault current to the 12 kV system. The licensee stated that the 12 kV system fault was within the design capability of 12 kV Bus D.

In the transformer yard, UA Transformer 1-1 had sustained total casing failure with the corner between the south and east sides separated by more than 6 feet. All four sides showed some separation. Large bulges in the approximately 1/4 inch sheet metal casing indicated that the welding on the seams had failed under a very large pressure surge. The licensee stated that the internal damage from the explosion and fire was too extensive to specifically determine where the transformer had first failed, although coil movement and resultant phase-to-ground faulting was apparent from burn marks on the sides of the transformer. There was external fire and heat damage to nearby UA Transformer 1-2, Main Transformers Phases B and C, and some of the isophase bussing.

The licensee took numerous actions to determine the extent of the damage and correct any damage found. The licensee found that all the damage was from the explosion of UA Transformer 1-1 and resultant fire. The licensee did extensive checks on the 12 kV busses inside the turbine building and associated components and found no damage. The licensee found the 12 kV bussing between UA Transformer 1-1 and the turbine building was damaged due to excessive movement caused by the transformer failure. The licensee determined that damage to Main Transformers Phases B and C and UA Transformer 1-2 was limited to external devices damaged by the fire. The licensee drained the oil from a main transformer and visually inspected the internals. No damage was found. Electrical and oil tests on Main Transformers Phases B and C and UA Transformer 1-2 did not identify any damage.

The licensee analyzed the event and concluded that there was no potential damage to safety-related 4 kV busses and equipment.

The licensee conducted two independent evaluations of the failure of UA Transformer 1-1. Both of these evaluations concluded that the original bracing of the transformer was insufficient to withstand a 100 percent bolted secondary fault. The evaluations noted that transformers built in the 1960's were not usually designed to withstand 100 percent bolted secondary faults.

The licensee was attempting to determine the withstand capability of the other site transformers. The licensee noted that the manufacturers for all their transformers, except the new main transformers just installed in Unit 1 this outage, were no longer in business. Preliminarily, it appears that Unit 1 SU Transformer 1-2 and Unit 2 UA Transformer 2-1 have designs similar to UA Transformer 1-1 and would fail if subjected to a secondary side bolted fault. The remaining UA and SU transformers appeared to be adequately braced to withstand a secondary bolted fault long enough for protective devices to clear the fault. In addition, the newly installed Unit 1 main transformers have the capability to withstand a fault. The Unit 2 main transformers were still being reviewed during this inspection. The licensee stated that potential failure of transformers under bolted fault conditions did not affect their operability. However, the licensee had initiated a long term review of the need to replace any transformers with insufficient bracing to withstand large secondary faults.

4.3 Inspectors Review of Design and Evaluation of Electrical Equipment

The inspectors reviewed the licensee's records and assessments associated with the event and concluded that the licensee's evaluation that UA Transformer 1-1 had failed prior to the capability of any circuit breaker to clear the fault was supported by the data and the lack of damage to 12 kV Bus D. The inspectors noted that 1.7 cycles was faster than protective devices could clear the fault.

The inspectors viewed the Unit 1 transformer yard, 12 kV Bus D, and reviewed associated licensee inspections and tests. The inspectors did not observe any damage to 12 kV Bus D or Circuit Breaker 52-VD-8. The inspectors noted that the arcing contacts of Circuit Breaker 52-VD-8 were not pitted and that the arc chutes did not exhibit any significant damage. The inspectors considered that lack of damage to this circuit breaker supported the licensee's analysis and data which indicated that UA Transformer 1-1 internal faults interrupted at least most of the current flow to the 12 kV bus before Circuit Breaker 52-VD-8 opened.

The inspectors reviewed the licensee's analysis that the 4 kV safety-related equipment was undamaged and agreed with the licensee's conclusion.

The inspectors reviewed a summary of the tests and repairs performed on Main Transformer Phases B and C, UA Transformer 1-2, and associated bussing. The inspectors also reviewed the details of the tests and repairs to UA Transformer 1-2. Based on these reviews, the inspectors concluded that the licensee had done conservative inspections and tests to ensure that any damage to these transformers was identified and corrected. In addition, the inspectors reviewed the vendor (Wagner) manual for UA Transformer 1-1 and did not identify any vendor recommended or required tests or maintenance that was not being performed by the licensee prior to the transformer failure.

Although the inspectors did not identify any immediate safety concerns with the transformers that had limited capability to withstand faults, the

inspectors noted that the method used to brace the coils in these transformers may relax with time and cause these transformers to fail at lower than expected faults. The inspectors also discussed with licensee personnel the design of the 4 kV to 480 V safety-related transformers. The licensee was considering a review of both issues at the end of the inspection. The inspector did not identify any regulatory requirements related to the fault withstand capability of the transformers. The licensee's evaluation of site transformers will be reviewed in a future inspection (Inspector Followup Item 275/9517-01).

5 FIRE PROTECTION ASSESSMENT

5.1 Overview

Based on the October 21, 1995, UA Transformer 1-1 explosion and fire, the inspectors reviewed the adequacy of the design and installation of fire protection equipment and the adequacy of the fire brigade response. The inspectors compared the existing transformer area fire protection with the licensee's fire protection system design as described in the Updated Final Safety Analysis Report (UFSAR), Section 9.5.1, including comparison with Branch Technical Position APCSB 9.5-1 and the requirements of 10 CFR Part 50, Appendix R. The inspectors concluded that: (1) the deluge system for the transformers performed its design function, (2) the oily water separator (OWS) was prevented from functioning because the drain to the receptacle was intentionally blocked by personnel because of mistaken environmental concerns, (3) the licensee's fire brigade training program was good, and (4) during the loss of offsite power emergency, lighting could be improved in four rooms because the battery operated lights (BOLs) did not energize and the emergency alternating current (ac) fixtures in the same room did not provide sufficient illumination.

5.2 Transformer Area Design

The inspectors found that all the Unit 1 transformers and Unit 2 SU Transformer 2-1 are located in the open yard area surrounding the power plant buildings at the 85 foot level, as indicated in Attachment 4. This yard area is located north of the containment and northeast of the turbine building. The four main transformers (one spare) are a minimum distance of 50 feet from the turbine building, the two UA transformers are approximately 30 feet away from the turbine building, and the three SU transformers are approximately 20 feet away from the turbine building.

The nonvital 12 kV switchgear room is located at the 85 foot elevation in the turbine building and the 4 kV switchgear room is located at the 104 foot elevation of the turbine building. The perimeter exterior walls are provided with 2-hour rated fire barriers. The ventilation openings in the east exterior walls of the turbine building are provided with fire curtains designed to close, should a fire propagate in the vicinity of the east wall. Additionally, the slope of the grade at the east wall is directed away from the building, thus precluding oil accumulation adjacent to the turbine

building walls. The fire protection features provided for the Unit 1 4 kV and 12 kV switchgear rooms are such that a fire in the main bank or startup transformer areas will not impact the operability of the equipment important to safety located within the turbine building. Any spilled oil will drain away from the turbine and containment buildings and transformers due to the gravity flow to the OWS drain system. The transformers were provided with fully automatic deluge spray systems with remote annunciation. This area was also equipped with hose stations, a yard hydrant with fully equipped hose houses, and portable fire extinguishers. The inspectors found that the fire protection deluge system for the transformers performed its intended design function even though one line above UA Transformer 1-1 was broken by the transformer explosion.

The inspectors determined that the Unit 1 transformer area design was generally consistent with Branch Technical Position APCSB 9.5-1, except for one guideline, which required a 3-hour fire wall between buildings containing safety-related systems and any oil filled transformers closer than 50 feet from the building. As discussed above, the Diablo Canyon design had only a 2-hour fire wall with UA transformers closer than 50 feet to the turbine building. However, this design difference was noted and discussed in UFSAR, Table B-1, page 9.5B-20. The inspectors concluded that the installed fire protection equipment met the UFSAR requirements.

5.3 Oily Water Separation System

The inspectors reviewed the design capacity of the OWS in the yard area for Unit 1. The capacity of the Unit 1 OWS was designed to accommodate 22,000 gallons, which was the contents of one main bank transformer. The OWS was designed to skim the oil from the surface of the water and then discharge the water to the outfall. The oil was designed to be retained in a 22,000 gallon receptacle.

During the October 21, 1995, event, the OWS was prevented from functioning because the drain to the receptacle was intentionally blocked with sandbags by licensee personnel because of mistaken environmental concerns. Licensee personnel removed the sandbags after fire brigade personnel determined that the drain led to the OWS, which was designed to collect oil and water spillage. The licensee stated that a week prior to this event, a full discharge test of the deluge system demonstrated the adequacy of the OWS drain. The licensee identified that intentional blocking of the OWS drain was caused by a weakness in their general employee training program. The licensee committed to upgrading their training program to include the purpose of the OWS drain. The licensee also installed signs at the OWS drains for both units which indicated the purpose of the drains and provided instructions not to block them during any oil spills.

The inspectors also noted that because of the blocking of the OWS drain numerous oxygen bottles were in the pool of oil and water, which could have made the event significantly worse, had the deluge system not extinguished the

fire external to the transformer. The licensee immediately moved the bottles and upgraded their procedures to more specifically address storage of materials in the transformer areas.

5.4 Fire Brigade Response and Training

The inspectors reviewed the licensee's fire brigade training program, procedures, and fire preplans, including fire drills. Based on this review, the inspectors concluded that the fire brigade training program was considered to be a strength. The inspectors noted that a drill scenario on a transformer fire had been performed a few weeks prior to the event. The inspectors also noted that fire brigade response to the event was prompt and the fire was extinguished properly.

5.5 Emergency Lighting

The inspectors evaluated the adequacy of the emergency lighting in the containment and other effected areas when offsite power was lost. The licensee conducted a complete walkdown of all emergency lighting (both BOLs and emergency ac lights) in the Unit 1 turbine, auxiliary, and fuel buildings. As a result of the walkdowns, the licensee determined that emergency lighting could be improved in four fire areas. The emergency lighting in these areas was deficient because the installed BOL did not energize, and the emergency ac fixtures did not provide sufficient illumination. The licensee credited illumination from BOLs in these four areas to comply with Section III. J of 10 CFR Part 50, Appendix R. The areas of concern were the Class 1E 480 volt Bus F, G, and H rooms and the turbine-driven auxiliary feedwater pump room. The licensee reviewed the electrical design drawings for the BOLs in these rooms and determined that these BOLs were set up to energize upon the loss of the vital ac lights in the room. In this event, the BOLs did not energize because the vital ac lights in the rooms remained energized. As a corrective action, the licensee has proposed a design change to rewire these and similarly configured BOLs to be energized upon loss of offsite power. When offsite power was available, normal lighting in the area was sufficient for operators to perform required actions. The licensee was currently tracking this design issue in a nonconformance report (NCR). The inspectors concluded that the corrective actions taken by the licensee were appropriate.

5.6 Conclusions

The inspectors concluded that the fire protection features provided in the yard area and the prompt response and actions taken by the fire brigade were excellent. The inspectors also concluded that the lighting deficiencies were being adequately addressed.

6 ROOT CAUSE ASSESSMENT AND CORRECTIVE ACTIONS

6.1 Overview

The inspectors reviewed a preliminary version of the licensee's root cause analysis summary for NCR N0001939, "Auxiliary Transformer 1-1 Failure." The licensee prepared an event and causal factors chart to analyze the human performance and programmatic aspects of the events leading to the transformer failure. They determined that the event was caused by a general programmatic failure to control ground buggies. The licensee's administrative controls were ineffective in preventing energization of an electrical bus with a ground buggy installed. The licensee identified five primary causal factors for the ineffective controls of the ground buggies: inadequate written instructions, lack of process ownership, inadequate past problem resolution, poorly designed tags and labels, and inadequate transformer design (discussed in Section 4). While not identified as a primary causal factor, the licensee also identified that fatigue was a contributing cause.

The inspectors considered that the licensee's preliminary root cause evaluation was generally thorough and comprehensive.

6.2 Inadequate Controls of Ground Buggy Installation and Removal

There are a number of licensee procedures which control the installation and removal of ground buggies at Diablo Canyon.

- Inter-Departmental Administrative Procedure OP2.ID1, "DCPP Clearance Process," Revision 2, required that clear and concise clearance points be indicated for electrical grounding points, operators perform all switching required to return equipment to service and operators complete all necessary paperwork, including independent verification of clearance removal.

- Operating Procedure OP J-5:III, "12kV Bus D and E- Shutdown and Clearing," Revision 3, required that if work was to be performed on the bus, that the Electrical Department install grounds under the observation of a qualified operator.

- Operating Procedure OP J-5:IV, "12kV Breaker Code Order," Revision 6, required that an approved switching form be used to track the installation of a grounding device. Operators were also required to observe the electrician complete each switching step.

- Technical Services Maintenance Procedure MP E-57.11B, "Installing and Removing Grounds from Deenergized Power Plant Electrical Equipment," Revision 8, required that ground installation be included on a clearance request, "Ground Installed" tags be installed on the cubicle door, a Caution Tag be hung on the ground buggy and the caution tag be logged in

accordance with Procedure CF4.ID5. Maintenance personnel were also not to report off of a clearance until all ground buggies were removed.

- Inter-Departmental Administrative Procedure CF4.ID5, "Control of Lifted Circuitry, Process Tubing and Jumpers during maintenance," Revision 0, required that the location of installed personnel grounds and the installation of all tags not installed by an approved written procedure be recorded on a Status Sheet (Form 69-11636).

On October 5, electrical maintenance personnel initiated work order (WO) R0084606 to perform Electrical Maintenance Procedures MP E-63.3C, "Maintenance of General Electric Metal-Clad 4 KV and 12 KV Switchgear," Revision 1, and MP E-63.3B, "Maintenance of Potential Transformer Cabinets in General Electric Metal-Clad 4 KV and 12 KV Switchgear," Revision 1, on 12 kV Bus D. Procedure MP E-63.3B, Step 5.3.1, required that a ground buggy be installed for the 12 kV switchgear work.

As discussed in the following sections, licensee personnel failed to follow their procedures for the installation and removal of the ground buggy installed in the location for Circuit Breaker 52-VD-4.

6.2.1 Clearance Order Specifications

In preparation for 12 kV Bus D work, the licensee initiated Clearance CR00049276, "12kV Bus D-Outage." The clearance listed the installation of ground buggies at Circuit Breakers 52-VD-8 and 52-VD-4, "if necessary." This appears to be contrary to Procedure OP2.ID1, Step 4.4.3, for providing clear and concise clearance points for grounding points.

6.2.2 Ground Buggy Installation

In accordance with Procedure OP J-5:IV, operations personnel prepared a switching log for the installation of a ground buggy on 12 kV Bus D. Operations personnel incorrectly specified on the switching form that the ground buggy be installed on the load side of Circuit Breaker 52-VD-4. The operators should have specified installation of a ground buggy on the bus side of 12 kV Circuit Breaker 52-VD-4. Installation of the ground buggy on the load side would have resulted in equipment damage and potential personnel injury, since the secondary side of SU Transformer 1-1 was energized.

On October 6, 1995, an electrician installed the ground buggy for Clearance CR00049276 on the bus side of 12 kV Circuit Breaker 52-VD-4. This was the correct installation for the given plant conditions. However, instead of stopping the work and correcting the switching log, he inappropriately signed the switching form indicating that the ground buggy had been installed on the load side of 12 kV Circuit Breaker 52-VD-4. This appears to be contrary to Procedure OP J-5:IV, Step 6.5 because the switching form incorrectly specified installation of a load side ground buggy.

6.2.3 Verification of Ground Buggy Installation

The switching log for Clearance CR00049276 required an operator sign verification for proper installation of the grounding device. On October 6, 1995, a ground buggy was installed by electrical maintenance personnel in 12 kV Bus D in accordance with WO R0084606. The electrician signed all the independent verification blocks which should have been signed by operations personnel. As a result, operators did not verify the installation of the ground buggy. This appears to be contrary to Procedures OP J-5:III, Step 6.5, and OP J-5:IV, Step 6.5, which required operations verification of ground buggy installation.

6.2.4 Equipment Location and Caution Tag Logging

Electrical maintenance personnel filled out and installed a caution tag for the ground buggy on the cubicle door; however, they did not record the location of the ground buggy or log the caution tag on the status sheet. This appears to be contrary to Procedures CF4.ID5, Step 5.2.4, and MP E-57.11B, Step 7.1.22 which required the recording of equipment location and the logging of the installed caution tags.

6.2.5 Work Order Completion

On October 21, 1995, after work was completed on WO R0084606 and associated WOs under the same clearance, an electrical maintenance foreman signed electronic verification that all work on the WO was complete, although the ground buggy was still installed. This appears to be contrary to Procedure MP E-57.11B, Step 2.2, which required all ground buggies to be removed prior to reporting off the clearance after work was complete.

6.2.6 Operations Return to Service

When operations personnel received the verification that work was complete, they completed the clearance. Clearance CR00049276, Section V, listed the possible installation of ground buggies for Circuit Breakers 52-VD-4 and 52-VD-8 and required verification of removal. However, operations personnel restored the clearance without these verifications being made. This appears to be contrary to Procedure OP2.ID1, Step 5.11.7, which required that operations return the system to service and verify ground buggy removal as specified by the clearance.

During a tailboard, prior to energizing 12 kV Bus D, operations personnel noted there was a caution tag on the control switch for Circuit Breaker 52-VD-4 indicating a ground buggy was installed in the cubicle for the circuit breaker. The licensee determined that operations personnel reached an erroneous conclusion that the ground buggy was on the load side of the breaker, based on the fact that maintenance personnel had reported that the WO for the bus was complete.

6.2.7 Inspectors' Conclusions

There were a number of licensee documents applicable to installation and removal of ground buggies. From a review of these procedures, the inspectors concluded that although some of the procedures were for operators and some of the procedures were for maintenance personnel, most of the procedures were clear as to the actions required.

Diablo Canyon Technical Specification 6.8.1 states, in part, that written procedures shall be established, implemented, and maintained covering the applicable procedures recommended in Appendix A of Regulatory Guide 1.33, Revision 2, dated February 1978. Appendix A of Regulatory Guide 1.33, Revision 2, recommends procedures for equipment control and the startup and operation of offsite and onsite electrical systems. The inspectors determined the licensee procedures for control of ground buggies were not properly implemented, resulting in a loss of offsite power, loss of operating safety-related systems (loss of shutdown cooling), and an unnecessary challenge to safety systems (start of EDGs). The six examples noted above of failure to properly implement procedures for the installation and removal of a ground buggy is an apparent violation of Technical Specification 6.8.1.

6.3 Lack of Process Ownership, Procedure Adherence, and Quality

Licensee root cause personnel informed the inspectors that their preliminary review of this event indicated that it was typical for operations personnel not to perform the required verifications of ground buggy installation and removal. They also determined that failure of electrical maintenance personnel to properly log installation and removal was also typical.

The licensee's initial assessment of the root cause was site-wide acceptance by operations and electrical maintenance workers and supervisors of ground buggy installation and verification practices that were different than specified in the applicable procedures. The licensee determined that technical maintenance personnel thought operations personnel were responsible for ground buggies and operations personnel thought technical maintenance personnel were responsible for ground buggies. The licensee defined this situation as a lack of process ownership, which they determined to be the fundamental underlying cause of the event.

The licensee's planned corrective actions were intended to determine the extent of deviations from procedures and whether there were other situations where organizational interfaces were unclear. Licensee management (including the Senior Vice President and General Manager of Nuclear Power Generation and the recently announced head of all electrical generation for PG&E) conducted a series of meetings to discuss the event, the causes of the event, and the importance of identifying any other areas of potential concern. Licensee personnel were asked to identify other problem areas to their supervision for further evaluation. The inspectors attended a sample of the meetings and determined that the key points were discussed.

The inspectors concluded that the procedures and mechanisms established to control the installation and removal of ground buggies had some areas that were unclear and subject to misinterpretation of the expectations. The inspectors noted that the clearance procedure referred to electrical grounds as clearance points, but did not specifically call out electrical grounds in the definition of a clearance point. Licensee personnel stated that from a site perspective ground buggies were not viewed as clearance points. However, the inspectors identified clearances where ground buggy installation and removal were treated as clearance points and properly verified by operations. The inspectors concluded that proper conduct of the procedures should have prevented the event. The inspectors agreed that site practices had become different than those specified in the procedures. The inspectors noted that the licensee's evaluation emphasized the programmatic problems rather than individual procedure adherence. However, the inspectors considered the licensee's overall effort to be a thorough and complete root cause analysis.

6.4 Inadequate Past Problem Resolution

On October 5, 1994, the licensee left a ground buggy attached to the output of EDG 2-1 during postmaintenance testing. The licensee tried to load the EDG twice before discovering the ground. Electrical maintenance personnel were required to remove the ground buggy prior to starting the testing, but did not. In addition, some of the operators knew that a ground buggy was still installed, but assumed that it would not be connected to the EDG during the test. The licensee's corrective actions were documented in NCR N0001856. The licensee's corrective action was to revise Inter-Departmental Administrative Procedure CF4.ID5, "Control of Lifted Circuitry, Process Tubing and Jumpers During Maintenance," to include personnel grounds as jumpers/lifted leads.

Licensee personnel indicated that this procedure change was confusing in that it was difficult to conceptualize that a ground buggy was similar to a jumper. In addition, licensee personnel indicated that this procedure revision was ineffective in that licensee personnel never interpreted it to mean that the ground buggy itself should be logged as a jumper.

The inspectors reviewed the root cause analysis for NCR N0001856 (for the October 1994 EDG event) and compared the causes of this event with the recent ground buggy error and found them to be similar. In both events, maintenance personnel lost track of the fact that the ground buggy was still installed. In both events, operations personnel incorrectly evaluated the impact of the ground buggy remaining installed. The incorrect evaluation was rooted in the lack of a full understanding of the electrical configuration at the shift foreman level. The inspectors considered that many of the root causes of the ground buggy being left installed in 12 kV Bus D were present in the October 1994 EDG 2-1 event, but were not effectively corrected to prevent recurrence.

The inspectors agreed with the licensee's determination that they had an opportunity to correct the situation after previous similar occurrences in 1994. The licensee stated that interface problems between operations and maintenance prevented either organization from effectively resolving the

matter in 1994. The inspectors concluded that licensee management missed an opportunity to take effective corrective actions which could have precluded leaving the ground buggy in 12 kV Bus D on October 21, 1995, and the ensuing transformer explosion, loss of offsite power, momentary loss of shutdown cooling, and damage to offsite power supply components.

6.5 Poorly Designed Tags, Labels, and Terminology

The licensee determined that human factors considerations contributed to this event in that terminology practices provided an inadequate level of information for personnel to evaluate situations and make informed decisions.

6.5.1 Ground Buggy Terminology

At Diablo Canyon, ground buggies were installed as needed in the 12 kV and 4 kV system. The ground buggies consisted of frames with one set of three breaker stabs, which could be inserted into the cubicle, in the space of a removed circuit breaker. "Bus" ground buggies were oriented with stabs to connect directly to the switchgear busses and "load" ground buggies were oriented with stabs to connect to the external cables/devices for individual circuits. The buggies were clearly labeled when viewed from the front (with the words bus or load).

The term "load" was also routinely used by operators and electrical personnel to indicate the direction of power flow. Since power flowed from SU Transformer 1-1 via Circuit Breaker 52-VD-4 to 12 kV Bus D, the bus side of the 12 kV switchgear could also be viewed as a load for the SU transformer. The licensee determined that the operators were confused when they prepared the switching order for the installation of the ground buggy in the location of removed Circuit Breaker 52-VD-4. As a result, they incorrectly completed the switching log to indicate the ground buggy was to be installed on the "load" side when they should have specified "bus" side. This error contributed to the incorrect decision to energize the switchgear with the ground buggy still installed.

Operations personnel stated that they were aware of the switching log which showed that a ground buggy was installed in the location of Circuit Breaker 52-VD-4. As discussed in Section 6.2 an operator questioned the configuration of the ground buggy during the tail board conducted prior to reenergizing the 12 kV switchgear. The operators discussed the ground buggy location and assumed that the ground buggy was installed on the load side. On that basis, operations personnel considered that the bus could be safely energized from UA Transformer 1-1 with the ground buggy still installed. This decision would have been correct if the buggy had been on the load side of the cubicle.

During the inspection, the licensee revised the terminology for labeling ground buggies to bus and line. Bus ground buggies had stabs which could be connected directly to the switchgear busses, and line ground buggies had stabs

to connect to the external cables/devices for individual circuits. The inspectors determined that this was an important clarification.

6.5.2 Ground Buggy Caution Tags

Prior to the October 21, 1995, event, the maintenance foreman performed a walkdown of the 12 kV switchgear prior to reporting off the clearance. During that walkdown, he overlooked the caution tag which indicated that the ground buggy was still installed in the cubicle for Circuit Breaker 52-VD-4. The licensee determined that the caution tag could have been covered by several other tags of similar sizes that were hanging on the same cubicle. Licensee personnel also noted that the caution tags were yellow, which was not consistent with industry convention to use green to indicate a ground. They also noted that the caution tags did not include information to determine the configuration (load or bus) of the ground buggy. To address these weaknesses, the licensee revised the ground buggy tagging instructions to specify use of a larger green tag which included ground buggy configuration information (line or bus). The licensee indicated the new tags will be more visible.

The inspectors determined that the licensee's planned changes to the tags and labels used in the control of ground buggies would improve their effectiveness.

6.6 Fatigue

The licensee determined that work schedules had resulted in reduced levels of alertness for personnel involved in the event. Specifically, licensee personnel determined that fatigue contributed to the maintenance foreman's error. As discussed above, he performed a walkdown of the 12 kV switchgear prior to reporting off the clearance and did not identify that the ground buggy was still installed. Licensee management stated that they planned to reevaluate the site policy for scheduling overtime.

Licensee personnel stated that the maintenance foreman involved did not work in excess of any Technical Specification requirements for overtime use during the refueling outage. The inspectors independently determined that this was correct.

However, the inspectors reviewed overtime records for the month of October 1995 for other personnel in the Technical Maintenance Section and noted that several personnel had been repeatedly authorized to work more that 72 hours in a 7-day period. The inspectors determined that 44 percent of the temporary personnel in the Technical Maintenance Section exceeded the overtime guidelines for work during the refueling outage. Depending on the type of personnel, 25 - 30 percent of the permanent personnel in the Technical Maintenance Section also exceeded the overtime guidelines for work during a refueling outage. Based on a review of the overtime authorization documents and interviews with licensee personnel, the inspectors determined that

Technical Maintenance Section personnel were being authorized each week repeatedly to perform safety-related work which was within the scope of Technical Specification 6.2.2.f.

Diablo Canyon Technical Specification 6.2.2.f states, in part, " . . . during extended periods of shutdown for refueling . . . the following guidelines shall be followed: . . . An individual should not be permitted to work . . . more than 72 hours in any 7-day period . . . excluding shift turnover time . . . . Routine deviation from the above guidelines is not authorized." Inter-Departmental Administrative Procedure OM14.ID1, "Overtime Restrictions," Revision 3A, Step 5.2.3, stated that routine deviation from Technical Specification 6.2.2.f limitations shall not be authorized and that blanket approval of overtime assignments shall not be authorized.

The inspectors considered that the licensee management's repeated authorization of Technical Maintenance Section personnel to work more than 72 hours in a 7-day period constituted routine deviation from the provisions of Technical Specification 6.2.2.f. This is an apparent violation of Technical Specification 6.2.2.f.

Technical Specification 6.2.2.f also stated that overtime extensions should be approved by the plant manager, his designee, or higher levels of management. The licensee designated that overtime extensions could be approved by department managers, section directors, shift supervisors, and general foremen. All of the overtime extension requests reviewed by the inspectors were approved by general foremen. The inspectors were concerned that the licensee had designated various lower levels of supervisory personnel, including general foremen, to sign for the plant manager. The inspectors discussed the approval of overtime with licensee management. The licensee acknowledged the inspectors' concern.

6.7 Corrective Actions and Conclusions

The inspectors concluded that the licensee's root cause was effective and thorough in identification of the root causes of the event.

Following the event, the licensee developed an interim policy for removing grounding devices and energizing dead busses or transformers. Licensee personnel stated that they intended to use the interim policy while they completed their root cause investigation and completed appropriate long-term procedure revisions.

The inspectors reviewed the policy memorandum and interviewed the clearance coordinator regarding its implementation. The clearance coordinator stated that prior to the event it was the responsibility of operations to list ground buggies on the clearance and to verify the removal of ground buggies. He noted that the removal verification was sometimes cross-referenced to a release-off-for-test form. He stated that the interim policy clarified the responsibilities for maintaining ground buggy configuration. Under the interim policy, operators were required to verify both installation and

removal of ground buggies on the clearance form, i.e., ground buggies were treated as a clearance point. Under the interim policy, maintenance personnel track personal grounds on the Lifted Circuit and Tag Control Status Sheet. The interim policy also called for additional field walkdowns and management oversight. The inspectors determined that the interim policy provided an adequate level of increased control of grounding devices during the completion of the root cause analysis.

ATTACHMENT 1

1 PERSONS CONTACTED

1.1 Licensee Personnel

#M. Angus, Manager, Regulatory and Design Services
* J. Becker, Director, Operations
* D. Cosgrove, Supervisor, Fire Protection
* F. De Peralta, Fire Protection Engineer
* C. Dougherty, Senior Quality Assurance Engineer
#T. Fetterman, Director, Electrical and Instrumentation and Control Systems
#W. Fujimoto, Vice President and Plant Manager, Diablo Canyon Operations
*#T. Grebel, Director, Regulatory Support
* J. Gregerson, Fire Protection Engineer
* S. Hamilton, Quality Assurance Engineer
* D. Hampshire, Senior Engineer
#C. Harbor, Engineer, Regulatory Support
#C. Herman, Supervisory Engineer, Instrumentation and Control
#A. Jorgensen, Engineer, Nuclear Safety Engineering
#M. Lepple, Engineer, Regulatory Support
*#D. Miklush, Manager, Operations Services
* D. Oatley, Director, Mechanical Maintenance
*#H. Phillips, Director, Technical Maintenance
#R. Powers, Manager, Quality Services
#G. Rueger, Senior Vice President and General Manager
J. Shiffer, Executive Vice President
* D. Sisk, Engineer, Regulatory Support
* D. Smith, Engineer
* D. Taggart, Director, Nuclear Safety Engineering
#L. Womack, Vice President, Nuclear Technical Services

1.2 NRC Personnel

*#D. Acker, Project Inspector
#S. Boynton, Resident Inspector
*#J. Dixon-Herrity, Acting Senior Resident Inspector
#K. Perkins, Director, Walnut Creek Field Office
J. Russell, Acting Senior Resident Inspector
* A. Singh, Fire Protection Specialist, Office of Nuclear Reactor Regulation
* L. Smith, Reactor Inspector
*#H. Wong, Chief, Reactor Projects Branch E

*Denotes those attending the preliminary exit meeting on November 17, 1995.
#Denotes those attending the telephone exit meeting on December 8, 1995.

In addition to the personnel listed above, the inspectors contacted other personnel during this inspection.

2 EXIT MEETING

A preliminary exit meeting was conducted on November 17, 1995, and a final exit meeting was conducted on December 8, 1995. During these meetings, the

inspectors reviewed the scope and findings of the report. The licensee acknowledged the inspection findings documented in this report. The licensee did not identify as proprietary any information provided to, or reviewed by, the inspectors.

ATTACHMENT 2

ACRONYMS

ac	alternating current
BOL	battery operated light
EDG	emergency diesel generator
F	Fahrenheit
kV	kilovolts
NCR	nonconformance report
OWS	oily water separator
SFP	spent fuel pool
SU	standby startup
UA	unit auxiliary
UFSAR	Updated Final Safety Analysis Report
WO	work order

DCPP ELECTRICAL DISTRIBUTION BLOCK DIAGRAM

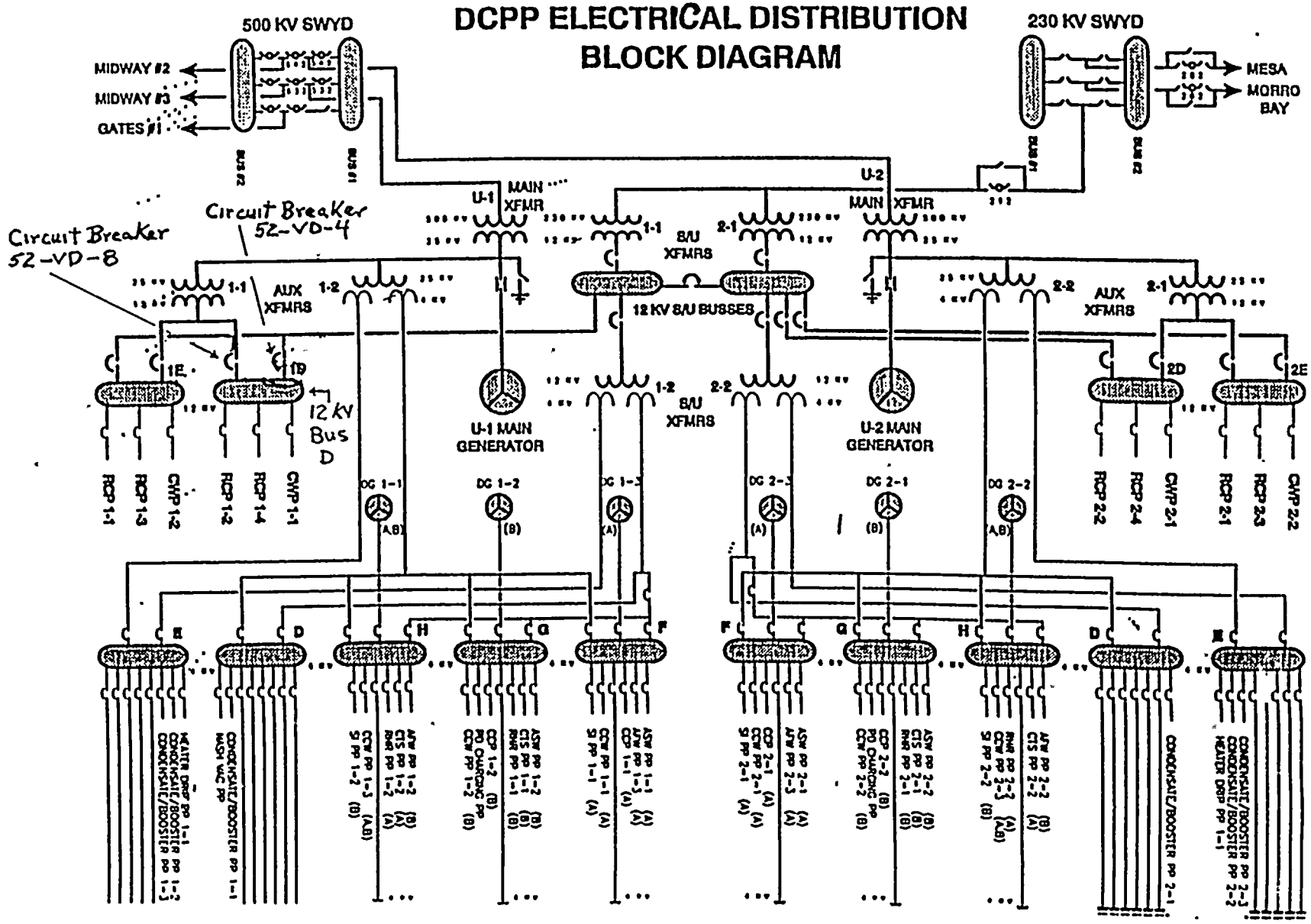

ATTACHMENT 3

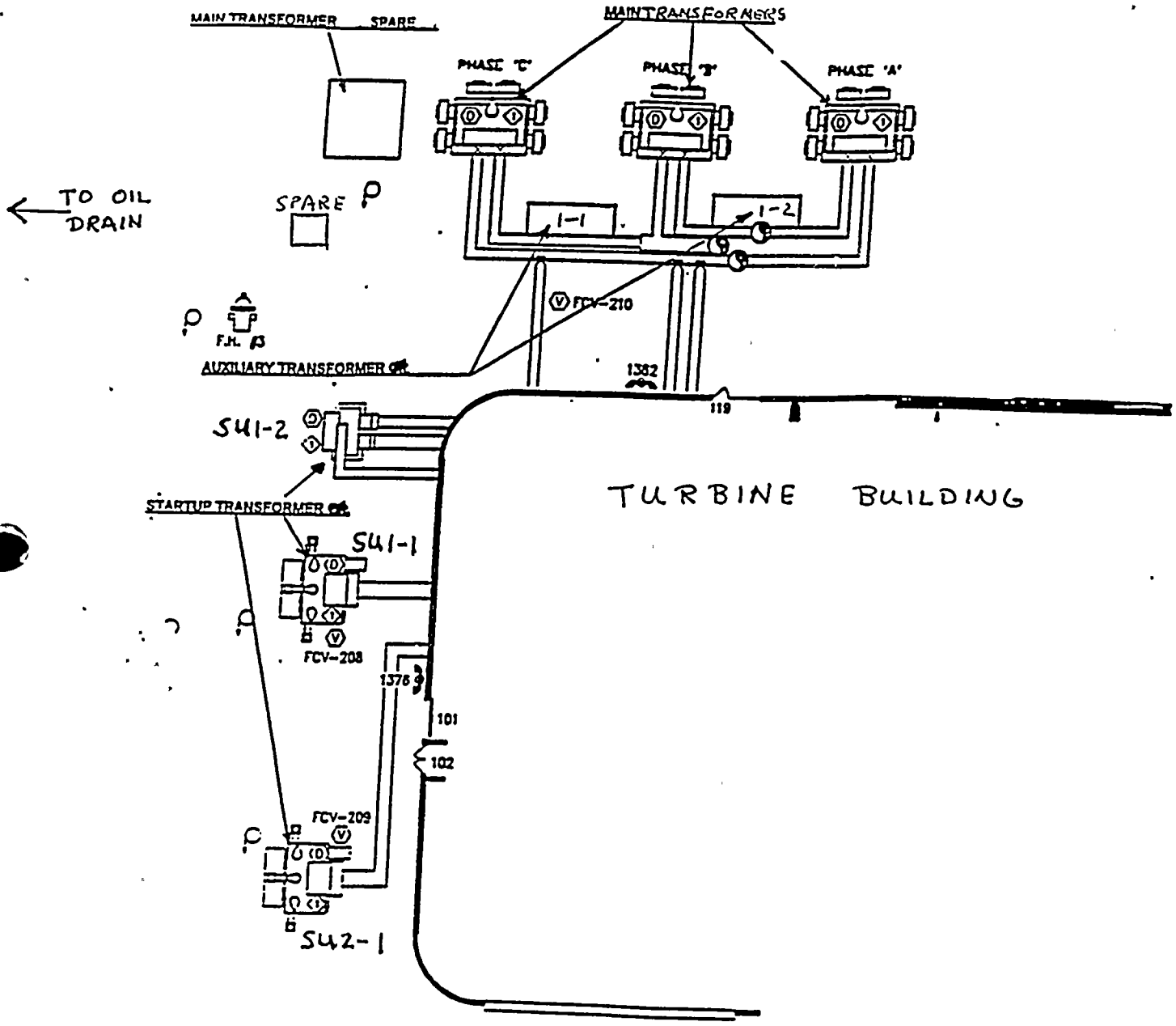

U-1 TRANSFORMER AND R.O. AREA