Enclosure
PG&E Letter DCL-95-219

UNITED STATES OF AMERICA
NUCLEAR REGULATORY COMMISSION

In The Matter of PACIFIC GAS AND ELECTRIC COMPANY	)	Docket No. 50-275 Facility Operating License No. DPR-80
Diablo Canyon Power Plant Units 1 and 2	)	Docket No. 50-323 Facility Operating License No. DPR-82

License Amendment Request No. 95-05

Pursuant to 10 CFR 50.90, Pacific Gas and Electric Company hereby applies to amend its Diablo Canyon Power Plant Facility Operating License Nos. DPR-80 and DPR-82 (Licenses).

The proposed changes revise Technical Specifications (Appendix A of the Licenses) 3/4.8.1.1, "A.C. Sources - Operating," and 3/4.8.1.2, "A.C. Sources - Shutdown." Information on the proposed changes is provided in Attachments A, B and C.

These changes have been reviewed and are considered not to involve a significant hazards consideration as defined in 10 CFR 50.92, and not to require an environmental assessment in accordance with 10 CFR 51.22(b). Further, there is reasonable assurance that the health and safety of the public will not be adversely affected by the proposed changes.

Sincerely,

Gregory M. Rueger

STATE OF CALIFORNIA
COUNTY OF SAN LUIS OBISPO
Subscribed and sworn to before me
this 29th day of September 1995

Sandra Eatherly
Notary Public

Attorneys for Pacific Gas and
Electric Company
Bruce R. Worthington
Christopher J. Warner

Christopher J. Warner

1535S

SANDRA EATHERLY
COMM. # 1062930
Notary Public — California
SAN LUIS OBISPO COUNTY
My Comm. Expires JUL 18, 1999

REVISION OF TECHNICAL SPECIFICATION 3/4.8.1. - ONE-TIME FOOTNOTE TO DIESEL FUEL OIL STORAGE AND TRANSFER SYSTEM ALLOWED OUTAGE TIME

A. DESCRIPTION OF AMENDMENT REQUEST

This license amendment request (LAR) proposes to revise Technical Specification (TS) 3.8.1.1, "A.C. Sources - Operating," and TS 3.8.1.2, "A.C. Sources - Shutdown," to add a one-time footnote to allow modifications to the diesel fuel oil (DFO) storage and transfer system, as follows:

1) A footnote would be added to TS 3.8.1.1b.2. stating:

> *The performance of modifications to the diesel fuel oil storage and transfer system requires one fuel oil storage tank at a time to be drained and replaced with a new storage tank. During this period, the diesel generator fuel oil storage requirement for two unit operation in Modes 1 - 4, or for one unit operation in Modes 1 - 4 and one unit in Mode 5 or 6 is 35,000 gallons. A total of up to 120 days may be required to complete the replacement of both tanks. For the duration of the tank replacement, temporary onsite storage of 30,000 gallons will be maintained. Prior to removal of a tank from service, the offsite circuits required by Technical Specification 3.8.1.1a. will be verified to be OPERABLE.*

2) A footnote would be added to TS 3.8.1.2b.2. stating:

> *The performance of modifications to the diesel fuel oil storage and transfer system requires one fuel oil storage tank at a time to be drained and replaced with a new storage tank. During this period, the diesel generator fuel oil storage requirement for one or two unit operation in Modes 5 and 6 is 35,000 gallons. A total of up to 120 days may be required to complete the replacement of both tanks. For the duration of the tank replacement, temporary onsite storage of 30,000 gallons will be maintained. Prior to removal of a tank from service, the offsite circuits required by Technical Specification 3.8.1.2a. will be verified to be OPERABLE.*

The footnote to TS 3.8.1.1b.2. would specify DFO storage requirements for this temporary condition to allow modifications to the DFO storage and transfer

system to be performed with both units operating in Modes 1 - 4. The footnote to TS 3.8.1.2b.2. would specify DFO storage requirements in the event that it is necessary to shut down one or both units while these modifications are being performed.

Changes to the TS are noted in the marked-up copy of the applicable TS pages provided in Attachment B. The proposed TS pages are provided in Attachment C.

B. BACKGROUND

California Code of Regulations

On May 5, 1994, Title 23, "Waters," of the California Code of Regulations (CCRs) became effective. Included in the CCRs are requirements for underground fuel oil storage tanks and piping. Specifically, the regulations require the following:

1. All buried underground storage tanks containing engine fuel oil must be retrofitted with a secondary containment (i.e., double-walled);

2. All buried underground piping must be double walled or installed within a structure designed to contain leakage; and

3. A leakage detection system must be installed to identify leakage from piping.

To comply with the CCRs, the DFO storage tanks must be modified by December 22, 1998. The required modifications will render one DFO storage tank and its associated piping up to the transfer pump vault inoperable for up to 60 days. Both DFO storage tanks and associated piping require modifications, and, therefore, a total of 120 days is required to complete these modifications.

DFO Storage and Transfer System Description

Diablo Canyon Power Plant (DCPP) Units 1 and 2 have six emergency diesel generators (EDGs) to provide emergency A.C. power in the event of a loss of offsite power. Three EDGs are dedicated to each unit. The function of the A.C. power sources is to provide power for the operation of emergency systems and engineered safety features (ESF) during and following the shutdown of the reactor in the event that offsite power sources are not available. The A.C. power sources are sufficient to operate the ESF systems required to mitigate a design basis loss of coolant accident (LOCA) in one unit, as well as those systems required for a concurrent safe shutdown of the other unit.

The DFO storage and transfer system consists of two 40,000 gallon storage tanks (0-1 and 0-2), two DFO transfer pumps (one pump per train), and the associated piping and valves required to connect the transfer pumps to the storage tanks and the individual day tank of each EDG. The system is designed to supply DFO from the storage tanks to the EDGs for Units 1 and 2.

Figure 1 shows a simplified single-line diagram of the DCPP DFO storage and transfer system. Further information on the DFO storage and transfer system design can be found in Section 9.5.4 of the DCPP Final Safety Analysis Report (FSAR) Update.

TS 3.8.1.1b.2. requires that a combined volume of at least 65,000 gallons of DFO be maintained for two units operating in Modes 1 - 4. Either DFO transfer pump is capable of supplying DFO from either storage tank to all six EDG day tanks via a DFO transfer pump suction cross-tie line. One transfer pump is capable of supplying all six EDGs operating at rated load.

The DFO storage tanks and the piping between the tanks and the DFO transfer pumps are buried and, therefore, require modifications to comply with the CCRs. Each DFO transfer pump is located in a concrete vault and is connected to the buried piping via a flanged connection upstream of the pump suction cross-tie line. The CCRs do require modifications to the DFO transfer pump vaults. However, these modifications will not require the DFO transfer pumps to be taken out of service. No modification to the DFO transfer pumps and suction cross-tie piping is required during the tank and piping replacement.

<u>DFO Storage Requirements</u>

TS 3.8.1.1b.2., A.C. Sources - Operating, limiting condition for operation (LCO) in Modes 1 - 4 requires:

> *Two supply trains of the Diesel Fuel Oil Storage and Transfer System containing a minimum combined storage of 33,000 gallons of fuel for one unit operation* and 65,000 gallons of fuel for two unit operation.*

TS 3.8.2.1b.2., A.C. Sources - Shutdown, LCO in Modes 5 and 6 requires:

> *One supply train of the Diesel Fuel Oil Storage and Transfer System containing a minimum storage of 26,000 gallons* of fuel in addition to the fuel required for the other unit.*

The DCPP Units 1 and 2 TS 3/4.8 Bases state the basis for this TS requirement:

> *The stored fuel oil supports the function of the A.C. power sources to provide power for the operation of emergency systems and engineered safety features (ESF) during and following the shutdown of the reactor in the event that offsite power sources are not available. The specified fuel oil quantity is based on the calculated fuel oil consumption necessary to support the operation of the emergency power source to power the minimum required ESF systems. Operation of minimum ESF systems is required to mitigate a design basis accident (LOCA) in one unit and those minimum required systems for a concurrent non-LOCA safe shutdown in the remaining unit (both units initially in Mode 1 operation). The fuel oil consumption is calculated for a period of 7 days operation of minimum ESF systems. This requirement provides a sufficient operating period within which offsite power can be restored and/or additional fuel can be delivered to the site.*

The current DCPP TS 3.8.1.1b.2. LCO and Bases were accepted and issued by the NRC as License Amendments (LAs) 74 (Unit 1) and 73 (Unit 2), dated August 12, 1992.

Replacement DFO Storage Tanks

Each replacement DFO storage tank has an increased nominal capacity over the existing storage tanks of 10,000 gallons (approximately 25%). This size tank was chosen because it provides the greatest capacity, while allowing use of the existing tank location (i.e., in close proximity to DFO transfer pumps). The replacement tanks will be able to use the same concrete foundation as the existing tanks, are only slightly dimensionally larger, and therefore, are able to use the same location.

Underground storage in this location is restricted due to the proximity of the following: the circulating water tunnels which are less than 3 ft. below the DFO storage tank foundation; the Turbine Building west buttress structure; the Technical Maintenance Building; and the heavy load transport areas.

Figure 2 shows a simplified drawing of the DCPP plant protected area, identifying the location of the existing tanks and the area considered for the temporary DFO storage.

C. JUSTIFICATION

The specific work and modifications to the DFO storage and transfer system include:

1. Replacement of each 40,000 gallon storage tank with a new 50,000 gallon, double-walled tank;

2. Replacement of the piping between each DFO storage tank and the DFO transfer pumps;

3. Installation of a leakage detection system for the tank and piping; and

4. Inspection, refilling and testing of the completed work to verify operability following the modifications.

PG&E estimates that the modifications will take approximately 60 days for each tank and its associated suction transfer piping (total of 120 days for both trains). This estimated time is from the tank and associated piping being removed from service to when it is returned to service, and is based on a schedule with work being performed on a 2 shifts per day, 7 days per week basis.

The one-time TS footnote would be added to TS 3/4.8.1.1 in order to identify the requirements necessary to allow continued operation of Units 1 and 2 in Modes 1 through 4 when a storage tank is taken out of service for the modifications. Similarly, the TS footnote would be added to TS 3/4.8.2.1 in order to address the TS requirements if one or both units are required to be shut down. A reduced amount of fuel oil storage, limited by the capacity of the in service tank, is specified during the period while a tank is out of service. Sufficient DFO storage is maintained in a combination of existing and temporary storage to meet the requirements of TS 3/4.8 Bases.

The proposed change to add the footnote is necessary to support the required modifications without shutdown of both units. The proposed changes are similar to LAs 74 (Unit 1) and 73 (Unit 2), issued for DCPP approving LAR 92-03 (PG&E Letters DCL-92-036 and DCL-92-131). LAs 74/73 included addition of a TS footnote addressing fuel oil requirements during DFO storage tank cleaning required by TS 4.8.1.1.3.

D. SAFETY EVALUATION

The modifications will be performed on only one DFO storage tank and its associated suction transfer piping at a time. One storage tank would be operable and capable of providing DFO to supply both transfer pumps. To

address this condition, additional temporary onsite DFO storage and other compensatory measures would be taken.

DFO Storage Inventory

The fuel oil inventory maintained in the operable permanent DFO storage tank will be at least 35,000 gallons; which is sufficient for the EDGs to power the minimum ESF systems required to mitigate a design basis LOCA, in one unit and those minimum required systems for a concurrent non-LOCA safe shutdown in the remaining unit (both units initially in Mode 1 operation) for approximately 4 days.

PG&E considers the 4-day minimum ESF systems inventory in one DFO storage tank during this one-time period to be acceptable for the following reasons:

1. The probability of a loss of offsite power (LOOP) event is relatively low, which makes the need for DFO to supply the EDGs powering ESF or LOOP loads relatively unlikely to occur during the 120-day period;

2. Using data collected for the DCPP probabilistic risk assessment (PRA), it is estimated that offsite power can be recovered between 90% (5th confidence bound) to 99% (95th confidence bound) of the time within the first 24 hours following a postulated LOOP.

3. It is unlikely the plant will have to rely on EDG power beyond 24 hours. However, if restoration of offsite power is delayed following a postulated LOOP event, DFO can be transported to the site from the fuel oil supplier located in the Los Angeles area within 24 hours. Other backup DFO suppliers are located in the San Francisco Bay Area and in Bakersfield.

4. Additional temporary onsite DFO storage of 30,000 gallons (usable) of DFO will be provided to assure a total of 65,000 gallons of DFO available onsite, as described below.

    a. The tank providing the temporary storage will be seismically supported to assure the tank maintains its function following a seismic event. The temporary storage complies with the requirements of FSAR Appendix 9.5B, Section F. FSAR Appendix 9.5B requires that all above-ground DFO storage tanks be located at least 50 feet from any building containing safety-related equipment.

    b. To assure that the DFO in the temporary, onsite storage tank is of acceptable quality, TS 4.8.1.1.3c. and TS 4.8.1.1.3d. will be applied to the temporary, onsite storage tank.

c. A DFO tanker truck will also be located onsite inside the plant - protected area to transport fuel oil from the temporary storage tank to the in service permanent DFO storage tank, if required to make up DFO inventory in the permanent tank.

d. Security measures will be established to protect the temporary onsite storage tank.

DFO Storage and Transfer System Alignment During Modifications

Modifications to each DFO storage tank and the piping between the tank and transfer pump vault will be performed on only one tank and its associated piping at a time. This will assure that one storage tank is operable at all times during the performance of the modifications. If the remaining operable storage tank becomes inoperable, TS 3.8.1.1, Action h., will be followed.

Both DFO transfer pumps will be operable during the performance of these modifications. The suction of the transfer pump associated with the inoperable DFO storage tank will be isolated from the tank being modified upstream of the pump suction cross-tie line. The suction cross-tie line valves will be opened. The associated DFO transfer pump will have the recirculation system valved out and the relief valve discharge routed to the other tank. This will allow either transfer pump to supply the DFO transfer system from the operable storage tank. If either DFO transfer pump becomes inoperable, TS 3.8.1.1, Action g., allowing 72 hours to restore the inoperable pump to operable status will be followed.

Although the fuel oil transfer pumps, filters, and strainers that constitute the two parallel fuel oil transfer trains will not be taken out of service due to the planned modifications to the DFO storage tank and transfer piping; the temporary configuration results in one tank and one suction line, including the foot valve, from the tank up to the cross connection line being common to both fuel oil transfer trains. Downstream of the cross connection supply line, the two parallel fuel oil transfer trains will be operable with either being able to supply fuel oil from the single storage tank.

The suction piping from the tank to the DFO transfer pumps is not sized for the flow rate resulting from simultaneous operation of two DFO transfer pumps. Consequently, to avoid a condition where both DFO transfer pumps may operate, the DFO transfer pump normally associated with the tank in service will be ready to start in the normal fashion upon actuation from the EDG day tanks control signals. The second DFO transfer pump, which is temporarily connected to the operable DFO storage tank and transfer piping through the cross connecting line, will be maintained in standby mode as described below.

The DFO transfer pump control switches are normally in the "AUTO" position. In the event of a LOOP, the switches are positioned to "On" and the DFO transfer pumps operate continuously. There is a recirculation system on each pump discharge when the day tanks are filled. Each pump discharge also has a relief valve. The recirculation system and the relief valve discharge to the DFO storage tank to which the DFO transfer pump is normally aligned. It is undesirable to have the potential for recirculation or relief valve discharge into the DFO storage tank being replaced. Consequently, when a tank is taken out of service for replacement, the associated DFO transfer pump will have the recirculation system valved out and the relief valve discharge routed to the other tank.

One DFO transfer train is capable of supplying all six EDGs operating at rated load. If needed in the event of the failure of the operating DFO transfer train, the standby train will be placed in either "AUTO" or "On", as appropriate, by operator action in response to alarms indicating a trip of the operating fuel oil transfer system. The TS EDG day tank minimum volume will continue to provide DFO to the EDGs for 60 minutes of EDG operation at rated load, while operators take manual action to start the standby DFO train. The annunciator response (AR) procedure AR PK16-07 series will be revised, as appropriate, for this temporary mode of operation.

System Alignment - Standby Transfer Pump in "AUTO"

The DFO transfer pump associated with the tank out of service remains operable in the above configuration and is available for manual start (referred to hereafter as standby). In the event the "On" DFO transfer pump fails, the standby DFO transfer pump will be manually placed in the "AUTO" control mode. In "AUTO" mode, the pump will be actuated by level switches in the EDG day tanks and will stop when day tank level is restored. The pump will subsequently start if actuated again by a day tank level switch. The DFO transfer pump discharge configuration and control of the DFO transfer train normally associated with the in-service DFO storage tank will not be altered. Thus, using the above system configuration, both DFO transfer trains downstream of the transfer pumps will be available to deliver DFO to the day tanks during the planned modifications.

System Alignment - Standby Transfer Pump in "On"

In addition to the DFO storage and transfer system alignment described above, the following system alignment would be available if the failure of the operating DFO train was due to the failure of the "On" DFO transfer pump. In this case, the transfer system downstream of the failed DFO transfer pump remains available.

Utilizing this alignment, the recirculation system including the pressure control valve, with return to the in service DFO storage tank, would be available by opening the cross connecting line downstream of the DFO transfer pumps. This would allow the second DFO transfer pump to be placed in "On" following opening of the cross connection. This alignment would enable continuous operation of the DFO transfer pump, with recirculation to the in service storage tank, as needed, thereby reducing the potential for a pump start demand failure.

Independent Means of Fuel Oil Transfer

An independent means of fuel oil transfer is also provided by the portable DFO transfer pump. This is a non-safety related diesel powered pump which can bypass the tank foot valve, suction line and transfer pump and supply DFO from the tank to the transfer pump discharge.

Compensatory Measures

1. TS 4.8.1.1.1a., which requires that both offsite power sources be verified operable, will be performed within 24 hours prior to removing a DFO storage tank from service. Planned maintenance that would affect the availability of the 230 kV and 500 kV offsite power sources will be minimized during the time that a DFO storage tank is removed from service. If there is anticipated severe weather or potential grid disturbances (e.g., a wildland fire), the DFO storage tank replacement will be postponed.

   During the time that a DFO storage tank is removed from service, TS 4.8.1.1.1a. will be performed at a frequency of once per 12 hours.

2. Two supply trains of the DFO storage and transfer system (downstream of the suction pipe cross connection), required by TS 3.8.1.1.b.2, will be verified to be OPERABLE for DFO transfer from the tank remaining in service within 7 days of removing the other tank from service.

3. An independent means of DFO transfer is also available by using the portable DFO transfer pump within 60 minutes. This pump would take suction directly from the DFO storage tank and discharge into the DFO piping distribution system. To assure the pump is operable, it is tested every 3 months.

   To assure the portable DFO transfer pump will be available following a seismic event, the portable DFO transfer pump is located in a seismically sound, accessible location in the turbine building. The portable DFO transfer pump will be tested within 7 days of removing the DFO tank from service.

4. The EDG day tanks are required by TS 3.8.1.1b.1. to contain a minimum volume of 250 gallons. This amount of DFO is adequate to start and operate the EDGs for approximately 60 minutes at rated load. To provide additional DFO in each EDG day tank, following any run of an EDG, the EDG day tank will be filled to at least 500 gallons.

Probabilistic Risk Assessment

A Probabilistic Risk Assessment (PRA) analysis was performed to quantify the increase in risk associated with the proposed one-time allowed outage time (AOT) extension for the DFO storage and transfer system. The PRA considered the effect on risk of removing each of the DFO storage tanks for 60 days (in sequence) and effectively having only one tank supplying DFO to both trains of the DFO transfer system for a total of 120 days.

The PRA considered one permanent DFO storage tank in service, the transfer system alignments, and availability of the portable DFO transfer pump. The proposed operating sequence, described above, was also considered in calculating the new core damage frequency resulting from internal and seismic initiators. Additional core damage probability (CDP) due to internal fires, was initially screened out due to the low probability of fire initiating events coincident with an independent loss of offsite power in which the fuel oil system would be demanded. Further, additional CDP due to seismic initiators is a small fraction of that due to internal initiators.

System Alignment - Standby Transfer Pump in "AUTO"

The PRA analysis was performed for the system alignment with the standby transfer pump in "AUTO". The PRA analysis calculated an additional increase in CDP of 3.1×10^{-6}, which represents a 6% increase in annualized core damage frequency.

System Alignment - Standby Transfer Pump in "On"

The PRA analysis was also performed for the system alignment with the standby transfer pump in "On". This alignment would enable continuous operation of the DFO transfer pump, thereby reducing the potential for a pump start demand failure. Utilizing this system alignment, the PRA analysis calculated an additional increase in CDP of 1.8×10^{-6}, which represents a 3.3% increase in annualized core damage frequency.

Impact of 230 kV System Outage Duration

Recent Licensee Event Report 1-95-007-00 (PG&E Letter DCL-95-185, dated September 7, 1995) documented a change in understanding of operability of the 230 kV system. However, the reliability of the system remains unchanged. Documentation regarding the 230 kV system line outages has been compiled. Since January 1990, the 230 kV system has been inoperable due to forced maintenance two times, for 1 hour and 3 hours in duration. In addition, due to agreements with PG&E system operations, scheduled line maintenance on the 230 kV system has been reduced over the last 2 years to less than 15 hours per year on average.

As discussed above, planned maintenance that would affect the availability of the 230 kV and 500 kV offsite power sources will be minimized during the time that a DFO storage tank is removed from service. The effects on the PRA analysis of 230 kV line outages of up to 9 hours were considered and determined to not be risk significant (i.e., $<1 \times 10^{-6}$).

PRA Conclusion

The compensatory measures, as described above, that are not credited in the PRA analysis, will give added assurance that the overall plant risk is being managed acceptably during the DFO storage and transfer system replacement period.

Conclusion

Although one DFO storage tank would be inoperable for approximately 120 days, the required DFO storage volume would be maintained using the single in service DFO storage tank connected to the DFO transfer system, and the additional temporary DFO storage tank. Additional compensatory measures, as stated above, would also be taken during this one-time 120 day period.

Based on the above evaluation and implementation of the compensatory measures listed above, PG&E believes that there is reasonable assurance that the health and safety of the public will not be affected by the proposed one-time TS change.

E. NO SIGNIFICANT HAZARDS EVALUATION

PG&E has evaluated the no significant hazards considerations involved with the proposed amendment, focusing on the three standards set forth in 10 CFR 50.92(c) as quoted below:

The Commission may make a final determination, pursuant to the procedures in paragraph 50.91, that a proposed amendment to an operating license for a facility licensed under paragraph 50.21(b) or paragraph 50.22 or a testing facility involves no significant hazards considerations, if operation of the facility in accordance with the proposed amendment would not:

(1) Involve a significant increase in the probability or consequences of an accident previously evaluated; or

(2) Create the possibility of a new or different kind of accident from any accident previously evaluated; or

(3) Involve a significant reduction in a margin of safety.

The following evaluation is provided for the no significant hazards consideration standards.

1. *Does the change involve a significant increase in the probability or consequences of an accident previously evaluated?*

   Neither the emergency diesel generators (EDGs) nor the diesel fuel oil (DFO) storage and transfer system is an accident initiator. When performing the modifications to the DFO storage tanks and transfer piping, administrative compensatory measures will be taken to reduce the potential challenge to the EDGs and to verify the operability of the DFO transfer system. A probabilistic risk assessment (PRA) was performed and demonstrates that the change in core damage frequency associated with taking each DFO storage tank and its associated suction transfer piping out of service for 60 days (total of 120 days for both trains) is not significant considering the compensatory measures which will be taken during the tank replacement period.

   Therefore, the proposed changes do not involve a significant increase in the probability or consequences of an accident previously evaluated.

2. *Does the change create the possibility of a new or different kind of accident from any accident previously evaluated?*

   Neither the EDGs nor the DFO storage and transfer system is an accident initiator. Temporary DFO storage will be onsite during tank replacement. The fire protection guidelines in Appendix 9.5B of the Updated Final Safety Analysis Report will be complied with in order to ensure temporary DFO storage without risk to plant systems.

Therefore, the proposed changes do not create the possibility of a new or different kind of accident from any accident previously evaluated.

3. *Does the change involve a significant reduction in a margin of safety?*

The proposed changes considering implementation of the compensatory measures has been shown to not impair safe operation of the plant. Having one DFO storage tank and associated piping out of service does not reduce the margin of safety since temporary storage of DFO will be maintained onsite and administrative compensatory measures will be taken to minimize the potential impact of this condition. Additionally, delivery of DFO to the site is available within 24 hours if needed.

Therefore, the proposed changes do not involve a significant reduction in a margin of safety.

F. NO SIGNIFICANT HAZARDS CONSIDERATION DETERMINATION

Based on the above safety evaluation, PG&E concludes that the changes proposed by this LAR satisfy the no significant hazards consideration standards of 10 CFR 50.92(c) and, accordingly, a no significant hazards finding is justified.

G. ENVIRONMENTAL EVALUATION

PG&E has evaluated the proposed changes and determined the changes do not involve (i) a significant hazards consideration, (ii) a significant change in the types or significant increase in the amounts of any effluents that may be released offsite, or (iii) a significant increase in individual or cumulative occupational radiation exposure. Accordingly, the proposed changes meet the eligibility criteria for categorical exclusion set forth in 10 CFR 51.22(c)(9). Therefore, pursuant to 10 CFR 51.22(b), an environmental assessment of the proposed changes is not required.

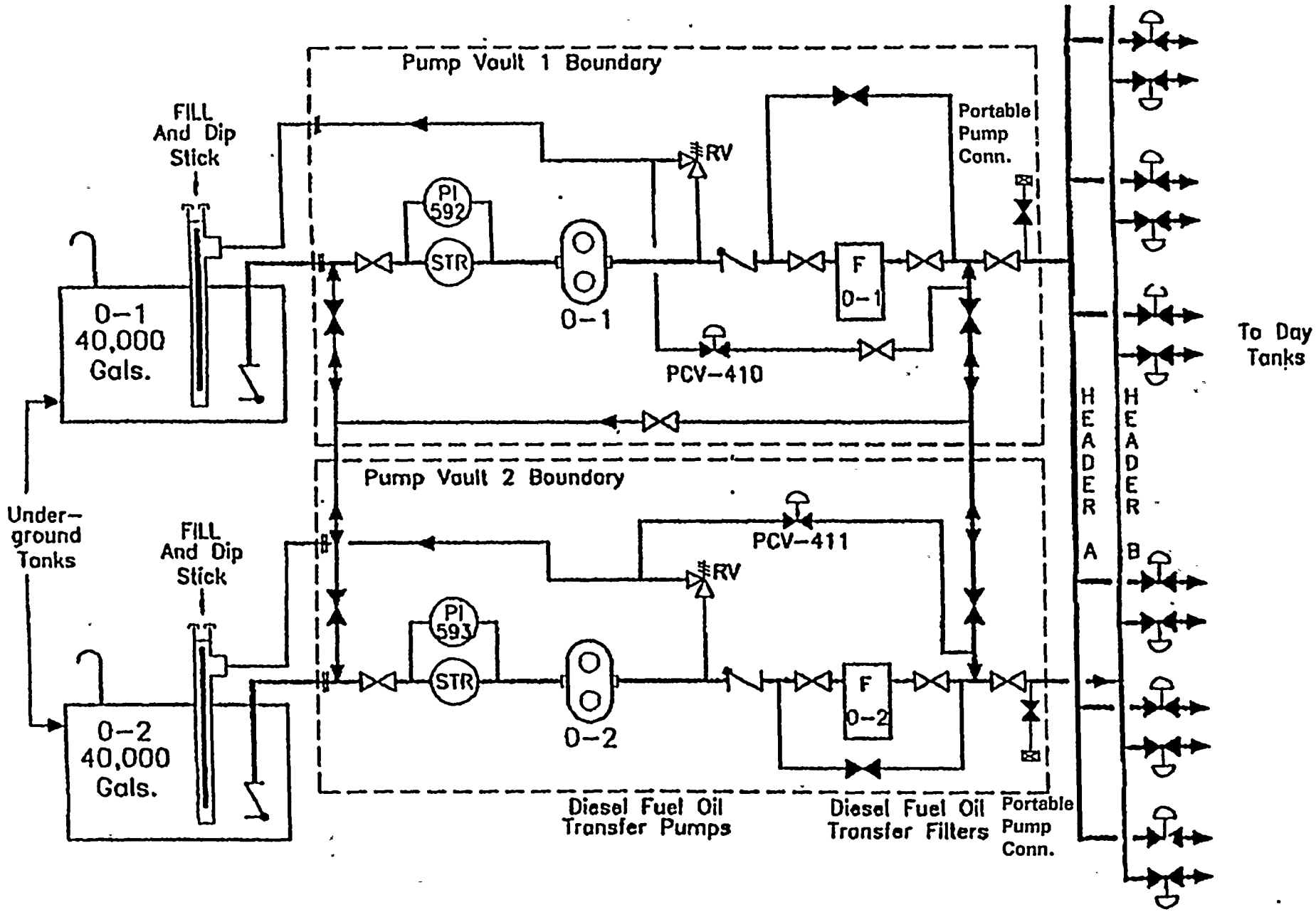

Figure 1 Diesel Fuel Oil Storage and Transfer System

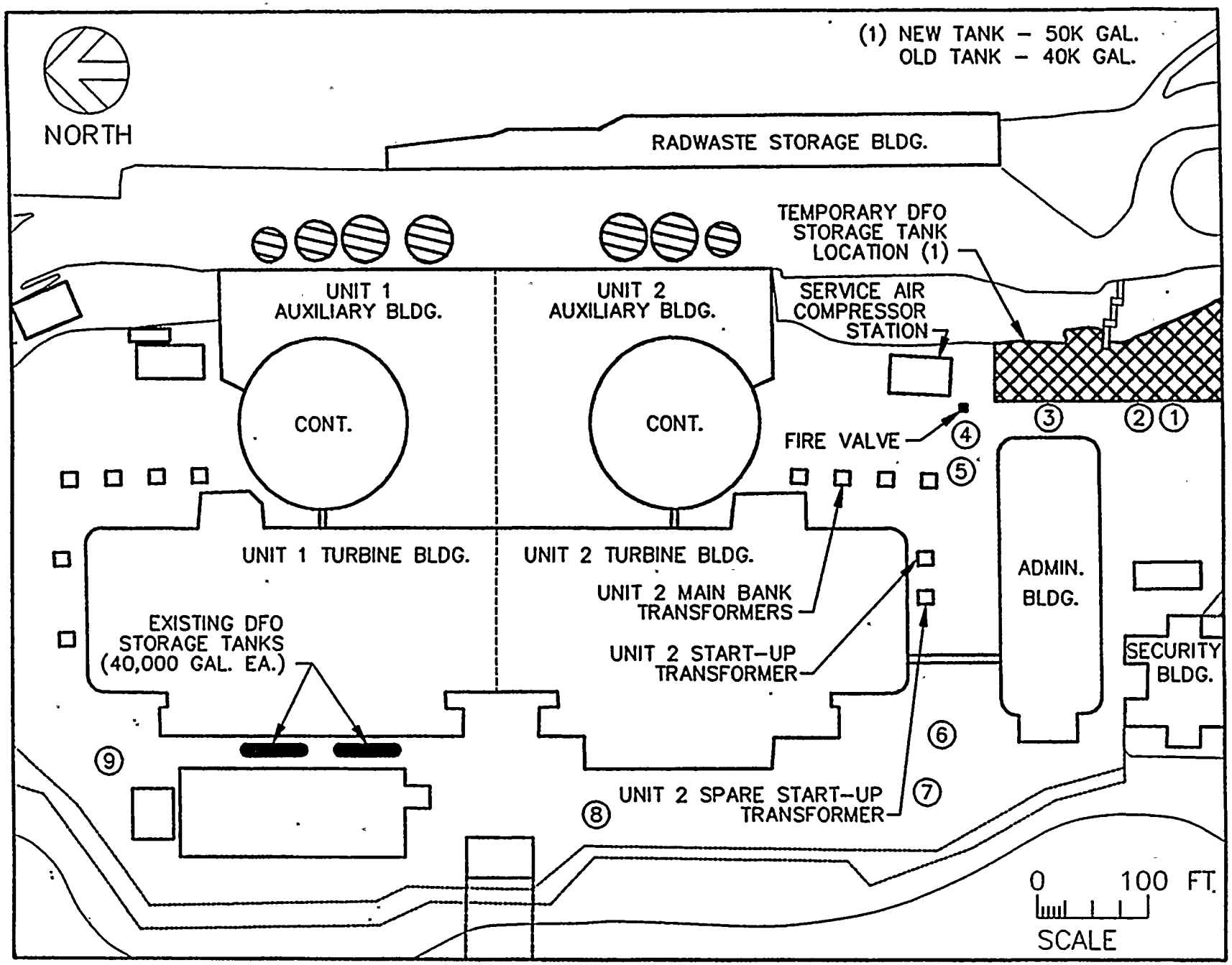

Figure 2 Location of Existing DFO Tanks and Temporary DFO Storage

MARKED-UP TECHNICAL SPECIFICATIONS

Remove Page	Insert Page
3/4 8-1	3/4 8-1
3/4 8-11	3/4 8-11