C-7144

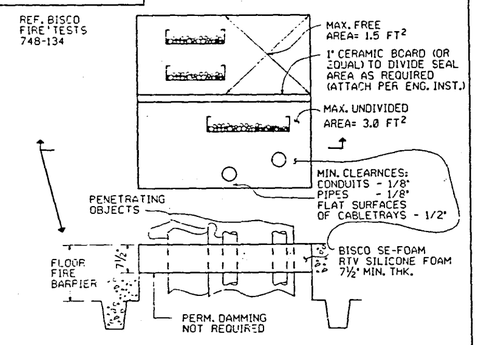

19 TYPICAL SE-FOAM SEAL OF TRAY. CONDUIT OR CABLE PENETRATION IN FLOOR FIRE BARRIER ANI 3HR FIRE RATED

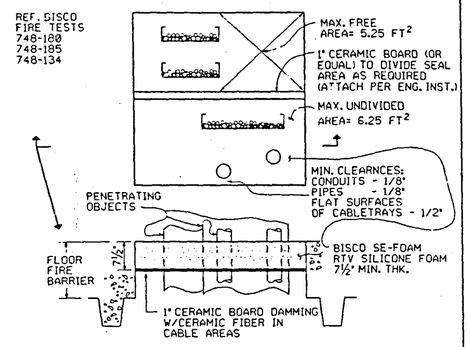

20 TYPICAL SE-FOAM SEAL OF TRAY. CONDUIT OR CABLE PENETRATION IN FLOOR FIRE BARRIER ANI 3HR FIRE RATED

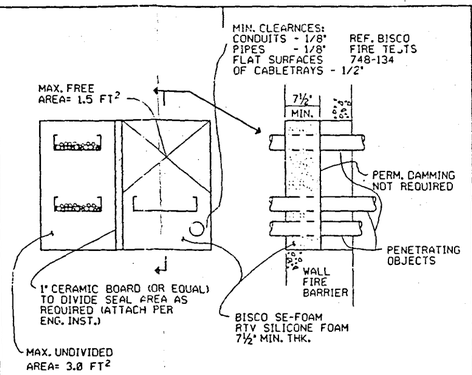

21 TYPICAL SE-FOAM SEAL OF TRAY. CONDUIT OR CABLE PENETRATION IN WALL FIRE BARRIER ANI 3HR FIRE RATED

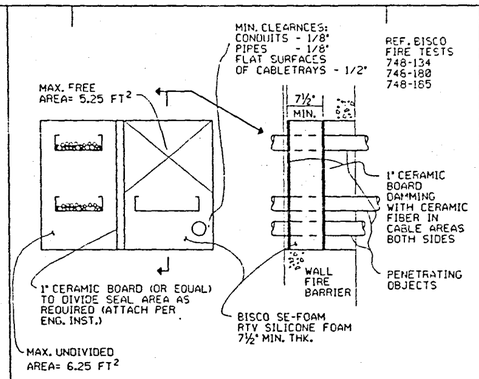

22 TYPICAL SE-FOAM SEAL OF TRAY. CONDUIT OR CABLE PENETRATION IN WALL FIRE BARRIER ANI 3HR FIRE RATED

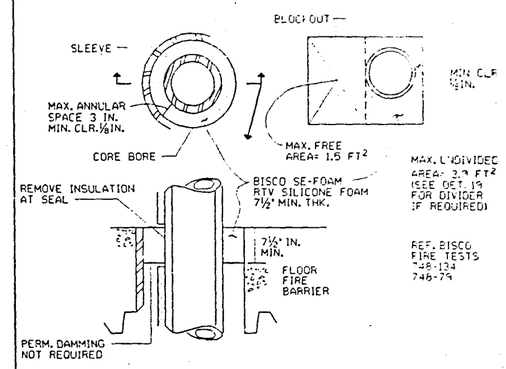

23 TYPICAL SE-FOAM SEAL OF PIPE OR CONDUIT PENETRATION IN FLOOR FIRE BARRIER ANI 3HR FIRE RATED

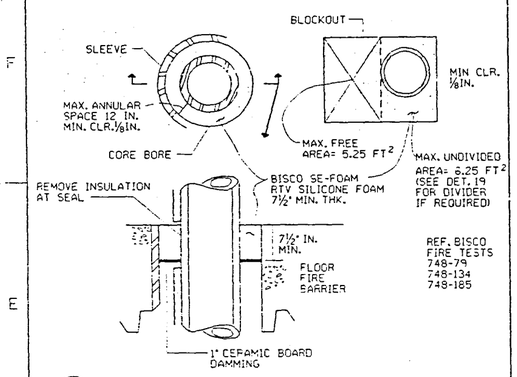

24 TYPICAL SE-FOAM SEAL OF PIPE OR CONDUIT PENETRATION IN FLOOR FIRE BARRIER ANI 3HR FIRE RATED

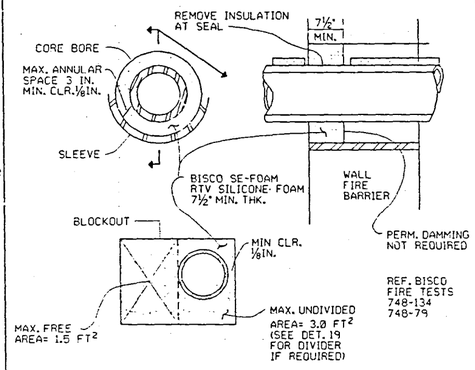

25 TYPICAL SE-FOAM SEAL OF PIPE OR CONDUIT PENETRATION IN WALL FIRE BARRIER ANI 3HR FIRE RATED

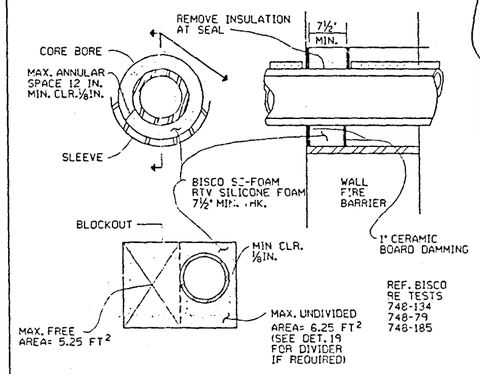

26 TYPICAL SE-FOAM SEAL OF PIPE OR CONDUIT PENETRATION IN WALL FIRE BARRIER ANI 3HR FIRE RATED

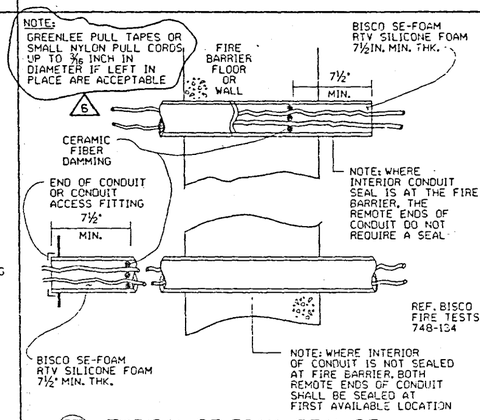

27 TYPICAL SE-FOAM SEAL OF INTERIOR OF CONDUITS WHICH PENETRATE A FIRE BARRIER ANI 3HR FIRE RATED

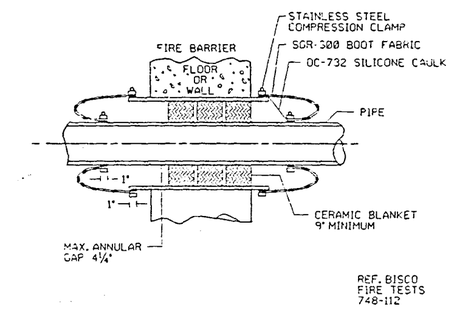

28 TYPICAL FLEXIBLE BOOT PENETRATION SEAL OF UNISULATED PIPE IN FIRE BARRIER ANI 3HR FIRE RATED

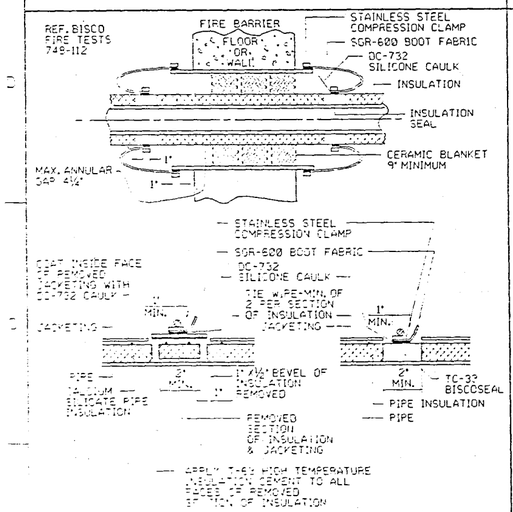

29 TYPICAL FLEXIBLE BOOT PENETRATION SEAL OF ISULATED PIPE IN FIPE BARRIER ANI 3-F FIRE RATED

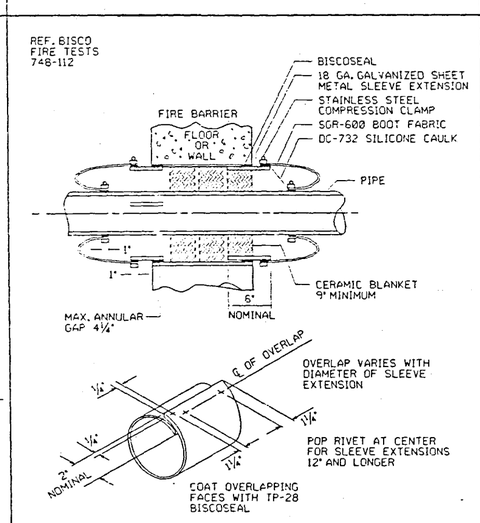

30 TYPICAL FLEXIBLE BOOT PENETRATION SEAL OF PIPE IN FIRE BARRIER (USING SLEEVE EXTENSION) ANI 3HR FIRE RATED

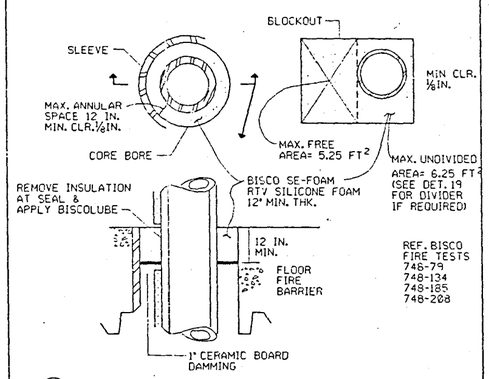

31 TYPICAL SE-FOAM SEAL OF PIPE (WITH AXIAL MOVEMENT) PENETRATION IN FLOOR FIRE BARRIER ANI 3HR FIRE RATED

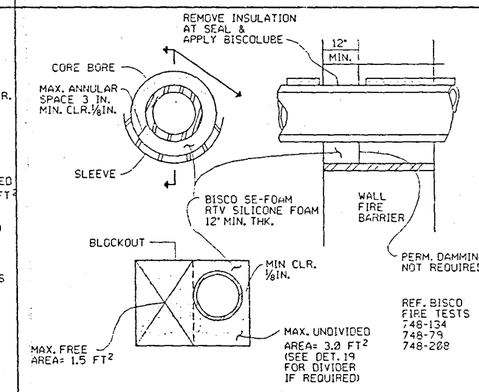

32 TYPICAL SE-FOAM SEAL OF PIPE (WITH AXIAL MOVEMENT) PENETRATION IN WALL FIRE BARRIER ANI 3HR FIRE RATED

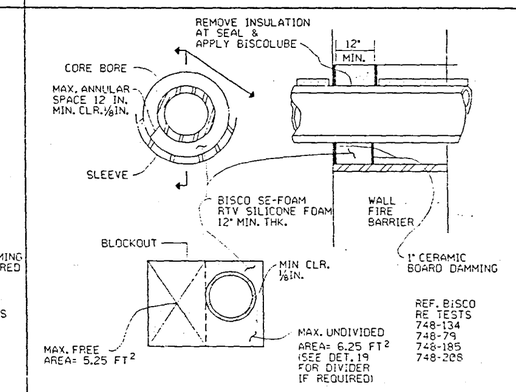

33 TYPICAL SE-FOAM SEAL OF PIPE (WITH AXIAL MOVEMENT) PENETRATION IN WALL FIRE BARRIER ANI 3HR FIRE RATED

06	12/1/88	ADDED NOTE TO DETAIL 27	BEB			
05	7/8/88	ADDED SHEET 2 AND ADDED REFERENCE DRAWINGS	BEB	RLW	RLW	RJM
04	7/14/86	REVISED CLEARANCES ON DTLS 19,20,21,22	BEB	RLW	RLW	RJM
03	5/8/86	ADD DETAILS 31,32,33	BEB	RJM	RLW	RJM
02	2/11/86	REVISED NOTE STATUS & DETAILS 19,20,21,22 PER FIR PER BA-297, DCR 4L2 & 3	BEB	RJM		
01	11/21/85	REVISED NOTE INFORMATION PER DCR 4L2 & 4L3	RLW	BEB		RJM
00	9/21/83	REV TO AS BUILT (UNIT PER NOT TO REF 4L1 DCN 3)	JRL	RLW	BHE	RJM
REVISI	DATE	DESCRIPTION				

REVISIONS

PORTLAND GENERAL ELECTRIC CO.
PORTLAND, OR.
TROJAN NUCLEAR PLANT

3 HOUR FIRE RATED PENETRATION SEAL DETAILS

APPROVALS	SCALE	NONE
DESIGNER	DRAWN BY	
DESIGN SUPV.	CHECKED BY	
ENGINEER M.R. CANDRERT	DATE	
SUPV. ENGR.	TRACED BY	
APPR. NUCL. T. BUSWELL		C-7144

REFERENCE DRAWINGS:
SEE C-7144 SHT. 1 OF 2 FOR REFERENCES

Docket # 50-344
Control # 8808190169
Date 8/12/88 of Document
REGULATORY DOCKET FILE

Trojan Nuclear Plant
Docket 50-344
License NPF-1

Document Control Desk
August 12, 1988
Attachment 4
Page 2 of 2

Docket # 50-344
Control # 8808190169
Date 8/12/88 of Document
REGULATORY DOCKET FILE

8808190229

APERTURE CARD

I certify that the image contained on this frame was made in the normal and regular course of business, on the date noted below and that it is an accurate reproduction of the document submitted to Micrographics.
DATE May 9 88