LICENSEE EVENT REPORT (LER)

FACILITY NAME (1)	DOCKET NUMBER (2)	PAGE (3)
DIABLO CANYON UNIT 1	0 5 0 0 0 2 7 5	1 OF 9

TITLE (4) CONTROL ROOM VENTILATION SYSTEM OUTSIDE DESIGN BASIS DUE TO PERSONNEL ERROR

EVENT DATE (6)			LER NUMBER (6)			REPORT DATE (7) (7)			OTHER FACILITIES INVOLVED (8)	
MON	DAY	YR	YR	SEQUENTIAL NUMBER	REVISION NUMBER	MON	DAY	YR	FACILITY NAMES	DOCKET NUMBER (S)
11	15	83	83	- 0 3 9 -	0 2	10	15	93	DIABLO CANYON UNIT 2	0 5 0 0 0 3 2 3
										0 5 0 0 0

OPERATING MODE (9): 6

POWER LEVEL (10): 0 0 0

THIS REPORT IS SUBMITTED PURSUANT TO THE REQUIREMENTS OF 10 CFR: (11)

X 10 CFR 50.73(a)(2)(ii)(B)

___ OTHER -

(Specify in Abstract below and in text, NRC Form 366A)

LICENSEE CONTACT FOR THIS LER (12)

	TELEPHONE NUMBER	
	AREA CODE	
DAVID D. SOKOLSKY, SENIOR NUCLEAR GENERATION ENGINEER	415	973-9717

COMPLETE ONE LINE FOR EACH COMPONENT FAILURE DESCRIBED IN THIS REPORT (13)

CAUSE	SYSTEM	COMPONENT	MANUFACTURER	REPORTABLE TO NPRDS		CAUSE	SYSTEM	COMPONENT	MANUFACTURER	REPORTABLE TO NPRDS	

SUPPLEMENTAL REPORT EXPECTED (14)		EXPECTED SUBMISSION DATE (15)	MONTH	DAY	YEAR
| | YES (if yes, complete EXPECTED SUBMISSION DATE)	| X | NO				

ABSTRACT (16)

On November 21, 1991, with Units 1 and 2 in Mode 1 at 100 percent power, PG&E determined that a postulated single active failure of one of the redundant booster fans or its damper in the control room ventilation system (CRVS) would cause the CRVS to be outside its design basis. A one-hour, non-emergency report was made for Units 1 and 2 in accordance with 10 CFR 50.72(b)(1)(ii)(B) on November 21, at 1335 PST.

As a result of investigations stemming from PG&E's configuration management program, PG&E determined that a postulated single active failure of one of the redundant booster fans or booster fan dampers in the CRVS could potentially cause the CRVS to be outside its design basis. This conclusion resulted from the determination that there was neither an alarm to notify control room operators of the failure nor an automatic switchover to the unaffected redundant CRVS train. The CRVS in part is designed to limit radiation exposure to personnel occupying the control room consistent with the requirements of General Design Criterion 19 of Appendix A to 10 CFR 50. With the above condition, the potential existed for an undetected failure of a booster fan or damper during the pressurization mode (Mode 4 for the CRVS), resulting in infiltration of unfiltered airborne radioactivity into the control room.

Corrective actions include providing means to allow operators to determine fan or damper failure, revising emergency procedures, and issuing a lessons-learned memo. A corrective action change is provided in this LER revision.

I. Plant Conditions

Units 1 and 2 have been in various modes and at various power levels with the condition described below.

II. Description of Event

A. Summary:

On November 21, 1991, PG&E determined that a postulated single active failure of one of the redundant booster fans (VI)(FAN) or booster fan dampers (VI)(BDMP) in the control room ventilation system (CRVS) (VI) could potentially cause the CRVS to be outside its design basis. This conclusion resulted from the determination that there was neither an alarm to notify control room (NA) operators of the failure, nor an automatic switchover to the unaffected redundant CRVS train. The CRVS in part is designed to limit radiation exposure to personnel occupying the control room consistent with the requirements of General Design Criterion (GDC) 19 of Appendix A to 10 CFR 50. With the above condition, the potential existed for an undetected failure of a booster fan or damper during the pressurization mode (Mode 4 for the CRVS), resulting in infiltration of unfiltered air into the control room that could potentially cause GDC 19 thyroid dose limits to be exceeded in the event of a design basis loss-of-coolant accident (LOCA). A one-hour, non-emergency report was made for Units 1 and 2 on November 21, 1991, at 1335 PST.

B. Background:

The CRVS in part is designed to minimize intrusion of airborne radioactivity into the control room and also to provide for cleanup of radioactivity trapped in the control room. Upon a high radiation/phase "A" signal, the CRVS will automatically switch to CRVS Mode 4 for both Units 1 and 2 since it is a common control room. See attached sketch for a typical alignment and flows during CRVS Mode 4. In Mode 4, one out of the four pressurization fans (VI)(FAN), two booster fans (one per Unit), and two main supply fans (VI)(FAN) (one per Unit) are in operation. The pressurization fan introduces outside air to the CRVS to pressurize the control room and to minimize infiltration of contaminated and unfiltered air. The booster fan draws the air through a series of HEPA (VI)(FLT) and charcoal filters (VI)(FLT). The main fans deliver the air to the control room to cool the room. If high airborne radiation levels are detected at the air intake of the operating control room pressurization fan, intake closure and pressurization fan shutoff occur within 5 seconds or less to prevent any significant amount of activity from entering the room and the redundant lead pressurization fan of the opposite Unit is started.

The pressurization air splits between Units 1 and 2. The booster fans provide enough suction to draw the mixture of pressurization air and some recirculation air (via damper M-4) from the control room through the HEPA and charcoal filters and deliver the air to the suction of the main supply fans. The main fans mix this air with additional recirculation air from the control room (via damper M-6), cool the air, and deliver the air back to the control room. The booster and main fan subtrains (two per Unit) in each Unit are not interlocked with each other, so that failure of any of the components does not result in any automatic action. The failure of a main fan is alarmed in the control room via flow switches (VI)(FS) located at the fan suctions. However, a failure of a booster fan or booster fan damper is not alarmed and therefore is not easily detectable.

Since the booster fan provides the motive force to draw the pressurization and recirculation air through the charcoal and HEPA filters, a booster fan or damper failure results in the pressurization air finding the path of least resistance, which is a flow reversal through the M-4 damper recirculation duct. Therefore, a portion of outside air is then directly discharged into the control room, bypassing the charcoal filters. With neither an alarm to notify control room operators of the failure nor an automatic switchover to the unaffected redundant CRVS train, the potential therefore existed for undetected airborne radioactive infiltration into the control room and that could cause GDC 19 control room thyroid dose limits to eventually be exceeded in the event of a LOCA.

Prior to June 1979, the CRVS for each unit consisted of redundant air conditioning units, complete with cooling coils and supply fans, filter booster fans and monitoring devices, and a single train of ducts, electric re-heaters (VI)(EHTR), filters and exhaust fan, with all redundant equipment being powered from separate vital buses to meet single failure criteria. On high radiation, Mode 3 (radiological mode) operation would be automatically initiated to recirculate 100 percent of the air with 20 percent through HEPA/charcoal filters. Mode 4 (carbon dioxide purge at that time) was provided for intermittent use to control the carbon dioxide level in the control room in the event long term control room isolation was required due to prolonged high airborne activity. Mode 4 required 80 percent recirculation through the main fans with 20 percent outside air makeup through the filters. There was no recirculation through the filters in Mode 4. Therefore, failure of the booster fan did not pose an immediate operational concern because no contaminated air could have been forced into the control room. Any introduction of contaminants had to be only through inleakage of unfiltered air through doors.

In June 1979, a concern was raised because the control room had exhibited a higher than anticipated inleakage based on surveillance test results. Therefore, a pressurization system was added, to be used in conjunction with the existing equipment, to pressurize the room and prevent inleakage. An outside contractor was engaged to provide the design for the pressurization system. The mechanical and electrical designs were implemented under separate design change notices (DCNs).

The electrical DCN, DCO-EE-446, was originally issued to provide Unit 1 power to Unit 2 equipment in the CRVS so as to allow Unit 1 operation prior to Unit 2 coming on line. The design evolved through many revisions, caused by scope changes, to the system including the addition of the pressurization system. Other than providing power from the opposite unit, the electrical design of the original portion of the CRVS was not significantly changed by this DCN (i.e., no alarm was provided for booster fan/damper failure).

The outside contractor also reviewed the entire CRVS to assess any possible impacts created on the ventilation system by the addition of the pressurization system. This review was basically a mechanical system review to verify that the system was adequately designed to perform its function. In his report, the contractor noted that the electrical DCN was not reviewed since it was part of a separate review program.

C. Event Description:

On November 15, 1983, and on May 7, 1985, Units 1 and 2 respectively entered Mode 6 (Refueling) for the first time with the condition described above. On November 21, 1991, a Technical Review Group determined that a postulated booster fan or damper single active failure could potentially cause the CRVS to be outside its design basis. In the current design, the redundant booster fans are not interlocked with each other. On failure of the operating booster fan, the redundant fan will not start without operator action. This postulated single failure of an operating booster fan can lead to the introduction of unfiltered airborne contamination into the control room without the knowledge of the operator. This occurs because failure of the booster fan creates an open path for the air to bypass the filters and enter the control room via the recirculation duct through the open damper M-4. On November 21, 1991, at 1335 PST, a one-hour, non-emergency report was made for Units 1 and 2 in accordance with 10 CFR 50.72(b)(1)(ii)(B).

D. Inoperable Structures, Components, or Systems that Contributed to the Event:

None.

E. Dates and Approximate Times for Major Occurrences:

1. November 15, 1983: Event date. Unit 1 initial entry into Mode 6. First time CRVS required to be operable.

2. May 7, 1985: Event date. Unit 2 initial entry into Mode 6.

3. November 21, 1991: Discovery date. CRVS determined to be outside its design basis. Report made to NRC in accordance with 10 CFR 50.72(b)(1)(ii)(B).

F. Other Systems or Secondary Functions Affected:

None.

G. Method of Discovery:

In late 1990 and early 1991, PG&E personnel were investigating relay (VI)(RLY) setpoints for the CRVS as part of PG&E's configuration management program. That investigation identified an issue with respect to the CRVS fan alignment relative to the vital busses (ED)(BU). PG&E evaluated that issue and correctly determined that, while it represented a potential area for plant configuration enhancement, it had no safety significance to the plant. Therefore, resolution of that issue was given a low priority. During subsequent investigation of that issue, the condition described in this LER was identified.

H. Operators Actions:

None.

I. Safety System Responses:

None.

III. Cause of the Event

A. Immediate Cause:

The immediate cause of this event was that there was neither an alarm to notify control room operators of a booster fan or damper failure nor an automatic switchover to the unaffected redundant CRVS train.

B. Root Cause:

The root cause of this design deficiency is personnel error in that the PG&E Design Engineer and the contractor failed to recognize the impact of the addition of the pressurization system on the overall system. The design deficiency could not have been identified if the mechanical review was not performed in conjunction with the electrical design because the lack of alarm or interlock on booster fan failure would not have been questioned. There was no evidence of coordination between the mechanical and electrical review efforts. Therefore, the conclusion of the review efforts did not identify this design deficiency.

IV. Analysis of the Event

There is a Class II area Radiation Monitor, RE-01 (IL)(MON), in the control room that is supplied with Class 1E power. PG&E Calculation 92-01 was performed, which conservatively estimated that the monitor would have alarmed approximately 21 minutes following a booster fan or damper failure concurrent with intrusion of contaminated air into the control room through the booster fan recirculation duct. Even though the radiation monitor alarm by itself would not have indicated the source of the radioactivity, it would have alerted the operator to locate the source of radioactivity and take appropriate action. The most logical cause of this problem would have been a malfunction in the CRVS.

PG&E Calculation 92-02 shows that the operator would have to manually start the redundant booster fan within 16 hours after the booster fan or its damper failure in order to preclude exceeding 10 CFR 50, Appendix A, GDC 19 dose limits for the 30-day duration of the postulated design-basis LOCA accident.

In the design basis LOCA dose analysis, one of the dose contribution pathways to the control room is residual heat removal (RHR) pump seal leakage. The RHR leakage contribution is not included in PG&E Calculation 92-02, since the booster fan failure was the pathway used in the calculation. This is consistent with the single failure criteria (FSAR Update Section 3.1), which requires an active single failure in the short term or a passive single failure in the long term.

In the event that Radiation Monitor RE-01 should fail, operator action may not have been initiated within 16 hours and the 10 CFR 50, Appendix A, GDC 19 limits could have been exceeded. However, the resultant thyroid dose to the operators of approximately 60 Rem for the 30-day duration of the design basis LOCA would not have approached incapacitating levels, and the operators would have maintained their ability to bring the plant to a safe condition. Further, the whole-body dose to the operator for the 30-day period would have been 0.08 Rem, which is well below the 10 CFR 50, Appendix A, GDC 19 whole-body dose limit of 5 Rem. Therefore, the health and safety of the public would not have been adversely affected.

V. Corrective Actions

A. Immediate Corrective Actions:

1. An Operations Department Night Order was issued that discussed the possible ramifications of booster fan or damper failure during CRVS Mode 4 operation.

2. Emergency Procedure (EP) E-0, "Loss of Reactor or Secondary Coolant," was revised to include instructions to operators to confirm CRVS operation status during CRVS Mode 4 operation and to include actions to be taken if booster fan or damper failure is diagnosed.

3. Streamers were installed on the CRVS recirculation duct register to enable control room operators to diagnose CRVS booster fan or damper operation status.

4. Surveillance Test Procedure (STP) M-6A, "Routine Surveillance Testing of CRVS" will be revised to verify proper operation of the CRVS streamers and booster fans.

B. Corrective Actions to Prevent Recurrence:

1. The current design change procedure, NECS E3.6 DC, "Design Changes," has adequate provisions, such as Failure Modes and Effects Analysis (FMEA), to help preclude such problems. In addition, independent verification and 10 CFR 50.59 analysis are now performed as part of the design change process.

2. A lessons-learned memo will be issued to all engineering disciplines stressing the importance of paying attention to detail whenever plant modifications are contemplated.

VI. Additional Information

A. Failed Components:

None.

B. Previous LERs on similar events:

None.

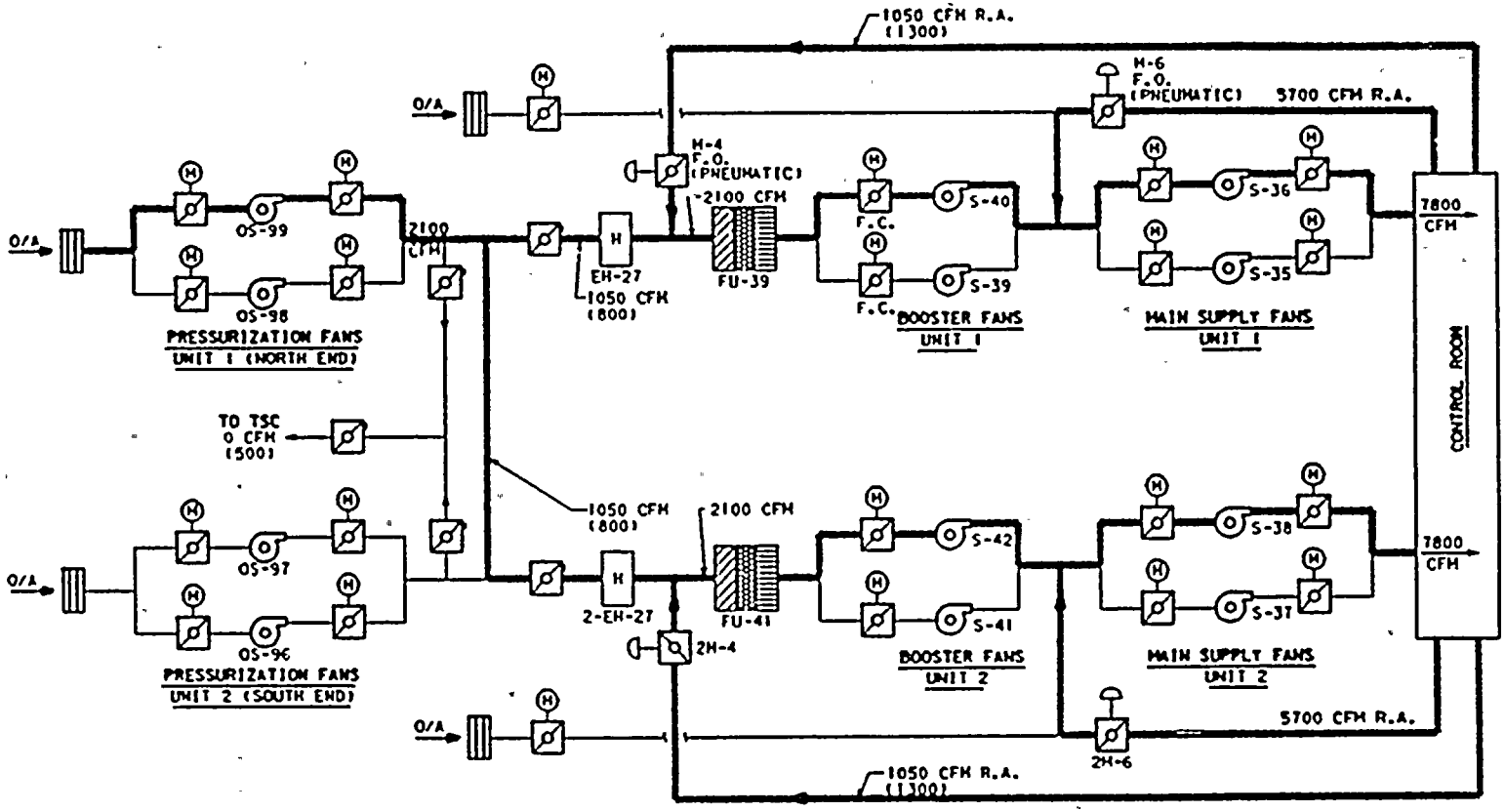

CONTROL ROOM HVAC SYSTEM

MODE 4 OPERATION

O/A - OUTSIDE AIR
R.A. - RECIRCULATED AIR
( ) CFM AFTER TSC HAS BEEN MANUALLY ALIGNED