U. S. NUCLEAR REGULATORY COMMISSION

REGION V

EA No.:	93-107
Report:	50-275/93-14 and 50-323/93-14
Dockets:	50-275 and 50-323
Licenses:	DPR-80 and DPR-82
Licensee:	Pacific Gas and Electric Company (PG&E) 77 Beale Street, Room 1451 San Francisco, California 94106
Facility:	Diablo Canyon Power Plant
Meeting Location:	Region V Office, Walnut Creek, California
Meeting Date:	May 19, 1993
Prepared By:	L. Cohventz, Senior Radiation Specialist — 5-25-93 Date Signed
Approved By:	James H. Reese, Chief, Facilities Radiological Protection Branch — 5-25-93 Date Signed

Summary:

Areas Reviewed: Previously announced enforcement conference, held at the request of NRC Region V, to discuss the licensee's analysis of several apparent violations of NRC requirements related to post-accident sampling and analysis, as presented in NRC Inspection Report 50-275/93-11 and 50-323/93-11.

Results: The licensee presented its analyses of the apparent violations, including a discussion of the root causes, corrective actions taken, additional corrective actions proposed, and overall safety significance. For a copy of the licensee's presentation, see Attachment A to this report.

The licensee's presentation demonstrated an understanding of the issues involved. Corrective actions presented were thorough and technically sound. No additional violations of NRC requirements were identified.

DETAILS

1. Persons Attending

Licensee

J. Boots, Director, Chemistry
W. Fujimoto, Vice President, Nuclear Technical Services
J. Gardner, Senior Engineer, Chemistry
T. Greble, Supervisor, Regulatory Compliance
T. Mack, Senior Engineer, Radiological Analysis
D. Miklush, Manager, Operations Services
J. Molden, Director, Instrumentation and Control
R. Powers, Manager, Nuclear Quality Services
G. Rueger, Senior Vice President, Nuclear Power Generation
J. Sexton, Manager, Quality Assurance
J. Shiffer, Executive Vice President
J. Tomkins, Director, Nuclear Regulatory Affairs
C. Warner, Law Department

NRC

K. Brewer, Radiation Specialist
H. Chaney, Senior Radiation Specialist
L. Coblentz, Senior Radiation Specialist
B. Faulkenberry, Deputy Regional Administrator
R. Huey, Regional Enforcement Officer
K. Perkins, Director, Division of Reactor Safety and Projects (DRSP)
S. Peterson, Project Manager, NRR
J. Reese, Chief, Facilities Radiological Protection Branch
S. Richards, Deputy Director, DRSP
R. Scarano, Director, Division of Radiation Safety and Safeguards (DRSS)
F. Wenslawski, Deputy Director, DRSS

2. Enforcement Conference Overview

The individuals listed in Section 1, above, met on May 19, 1993, to discuss the licensee's analysis of post-accident sampling issues raised in NRC Inspection Report 50-275/93-11 and 50-323/93-11.

Mr. B. Faulkenberry opened the meeting with a discussion of the meeting format and introduction of the general meeting topics. Mr. J. Shiffer responded with an overview of the PG&E reaction to the NRC inspection issues raised.

Mr. J. Reese then outlined the apparent violations to be discussed. These included: (1) the failure to implement and maintain a program, as required by Technical Specification (TS) 6.8.4, that would ensure the capability to obtain and analyze samples of radioiodines and particulates in plant gaseous effluents under accident conditions; (2) the failure to implement and maintain a program, as required by TS 6.8.4, that would ensure the capability to obtain and analyze samples of reactor coolant for dissolved hydrogen under accident conditions; and (3) the failure t

perform a written safety evaluation, as required by 10 CFR 50.59, for changes made to the post-accident sampling system.

Mr. G. Rueger introduced PG&E's presentation of the apparent violations. Mr. Rueger noted that each of the problems had occurred during efforts to upgrade post-accident monitoring capabilities, and reaffirmed PG&E's overall intention to maintain a strong post-accident sampling and analysis program.

The meeting progressed to a detailed discussion of each of the apparent violations. For each one, the licensee presented its general agreement or disagreement as to whether a requirement had been violated, the root cause or causes, the corrective actions taken, and the corrective actions proposed. Mr. Rueger, Mr. J. Gardner, Mr. J. Boots, Mr. J. Molden, and Mr. D. Miklush presented the licensee's analyses of the issues. Questions and additional information were presented by various members of the NRC and PG&E staff. The NRC Enforcement Policy was summarized as it related to the inspection findings.

The licensee's handout and slides, used as the outline for the overall discussion, are presented as Attachment A to this report. Several specific points of discussion are presented in Section 3, below.

At the conclusion of the meeting, Mr. Shiffer summarized the licensee's commitment to ensuring an effective program for post-accident sampling as well as effective oversight of changes to that program. Mr. Faulkenberry closed the meeting by acknowledging Mr. Shiffer's and others' remarks and thanking the licensee for its presentation efforts.

3. Specific Points of Discussion

In the course of the licensee's presentation, several points received particular attention and discussion:

a. Overall Safety Significance

The licensee noted several points related to actual safety significance of the apparent violations. Regarding reactor coolant dissolved hydrogen quantification, the licensee noted that little dependence was placed on this parameter in assessment of post-accident conditions. Other more effective and dependable methods were available for core damage assessment, and for determining the presence of a hydrogen bubble in the reactor vessel.

Regarding the plant vent iodine and particulate monitor, the licensee noted that the high-range monitor, RX-40, was only used in worst-case conditions, for accidents beyond the Final Safety Analysis Report design basis. The licensee also noted that, even for worst-case accident conditions, the plant vent high-range gross gamma monitor, RE-29, could be used to extrapolate iodines and particulates present in effluent releases, using graphs present

the emergency procedures. Protective action recommendations would be conservatively based on plant conditions rather than on RX-40 or other sample results.

b. Monitor Out-of-Service Time

The licensee acknowledged that RX-40 had been unavailable from February 26 to March 9, 1993, as noted in the inspection report. The licensee emphasized, however, that no "limiting condition for operation" or other criteria specified the allowable length of time that RX-40 could be out of service. Based on the overall use of the monitor, the available alternate means of making similar assessments, and specifications for similar types of monitors, the licensee stated that having the monitor out of service for 12 days seemed reasonable.

The licensee acknowledged, however, that Equipment Control Guideline (ECG) 11.1, which administratively controls actions to be taken when post-accident monitoring equipment is out of service, gave no guidelines for how long RX-40 could be out of service. The licensee noted that the ECG was in error in designating RE-32 (the mid-range monitor) as the primary monitor, in the sense that RE-32 could not meet the licensee's commitment to NUREG-0737. The licensee stated that, given these problems with ECG 11.1, the program would have relied on supervisory oversight to ensure that RX-40 was returned to service in a timely fashion.

4. Corrections to NRC Inspection Report 50-275/93-11 and 50-323/93-11

No errors were noted in the inspection report.

NRC/PG&E

ENFORCEMENT CONFERENCE

MAY 19, 1993

WALNUT CREEK, CA

NRC ISSUES

- Plant vent radioiodine and particulates
  - RX-40 out of service for 12 days without a GDC-19 backup
- Reactor coolant (RC) dissolved hydrogen
  - Low availability of Unit 2 in-line monitor
  - No 10 CFR 50.59 for gas chromatograph (GC) backup deletion
  - After GC deletion, backup methods did not meet GDC-19 requirement

PG&E

RADIOIODINE AND PARTICULATES ANALYSIS OVERVIEW

- Actual outage time for RX-40 was reasonable
- Equipment control guidelines did not accurately reflect primary and backup equipment designation
- Digital radiation monitoring system (DRMS) upgrade and procedural corrective actions have already been implemented
- Safety significance very low

PG&E

RC DISSOLVED HYDROGEN ANALYSIS OVERVIEW

- No backup requirements existed prior to 1990 when in-line monitor was installed
- Initially, the in-line monitor configuration did have GDC-19 backup. GDC-19 requirements were not met, however, from 1992 on when the GC backup was discontinued.
- GC backup method should not have been discontinued in 1992 without a written safety evaluation
- Though Unit 2 in-line monitor has had Low availability since mid-1992, maintenance was diligently pursued throughout the period
- Timely and comprehensive corrective actions have been taken
- Safety significance very low

PG&E

RADIOIODINES AND PARTICULATES ANALYSIS
NRC ISSUE

- T.S. 6.8.4 was not met because the plant vent high range sampler for radioiodines and particulates (RX-40) was removed from service for 12 days without a GDC-19 backup

RADIOIODINES AND PARTICULATES TECHNICAL SPECIFICATION REQUIREMENTS

.G. 6.8.4 Requires the licensee to establish, implement and maintain a program which will ensure the capability to obtain and analyze radioactive iodines and particulates in plant gaseous effluents under accident conditions

The program must include:

1. Training of personnel
2. Procedures for sampling and analysis
3. Provisions for maintenance of sampling and analysis equipment

PG&E

RADIOIODINES AND PARTICULATES REGULATORY REQUIREMENTS

- Capability of sampling postaccident effluent radioiodines and particulates
- Sampling and analysis dose less than GDC-19 criteria
- Regulatory guidance does not require backup
- Regulatory guidance does not limit equipment allowed outage time

PG&E

RADIOIODINE AND PARTICULATES ANALYSIS NUREG-0737 CAPABILITIES

- NUREG-0737 requirements met by midrange (RE-32) and high range (RX-40)
- 1983 NRC inspection report acknowledged use of RE-32 for midrange with understanding that RX-40 was required to meet high range
- Emergency procedures lead to the use of the correct monitor for the plant conditions

PG&E

BEFORE 1993 DESIGN UPGRADE

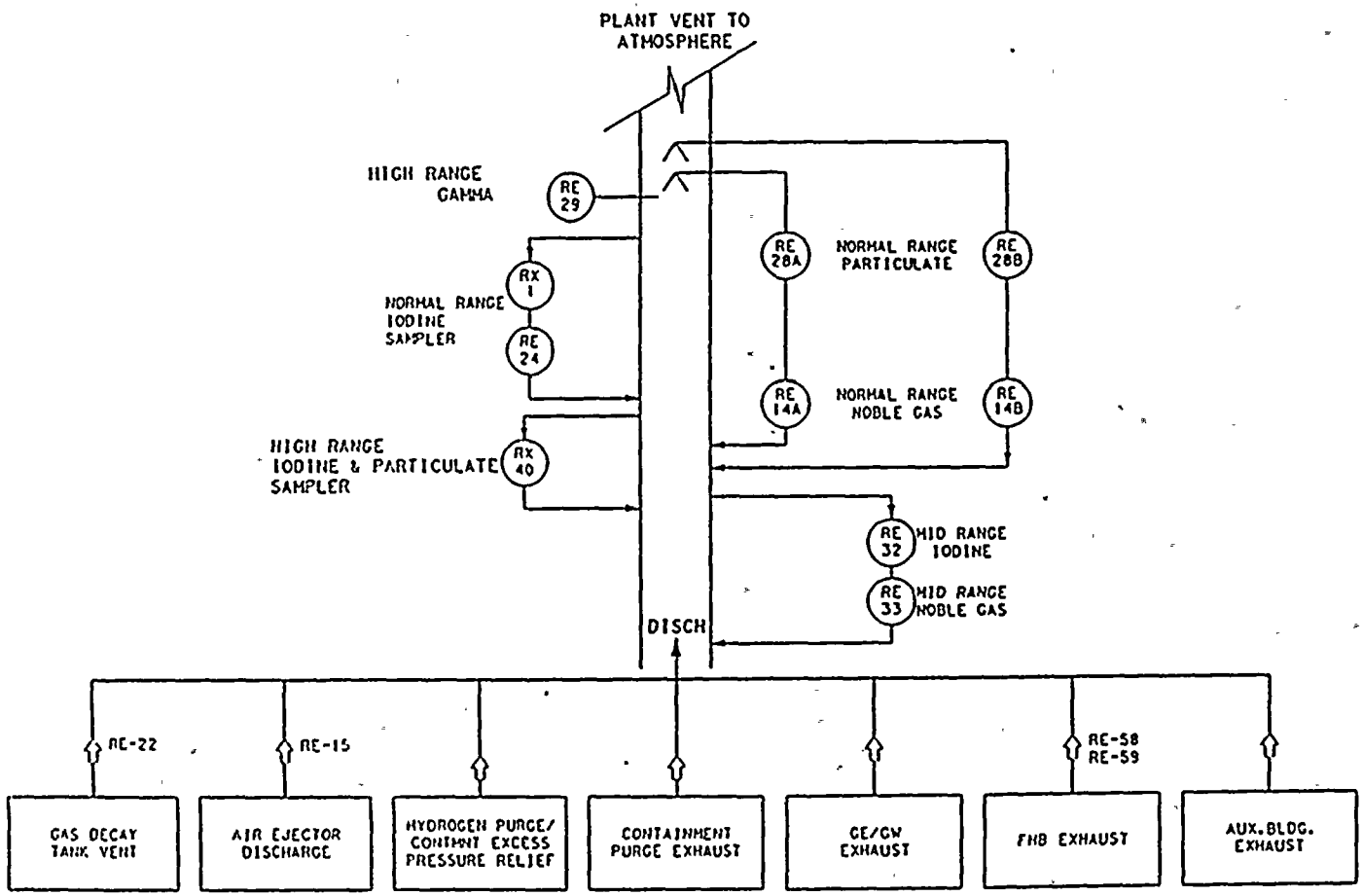

PG&E

GRO

RADIOIODINES AND PARTICULATES DRMS PROGRAM

- Major upgrade to DCPP radiation monitoring capability

- Replaced plant vent rad monitor skids
  - RE-14 noble gas
  - RE-24 iodine
  - RE-28 particulate

- Installed new high range skid
  - RE-87 high range noble gas
  - New high range iodine and particulate (I&P) samplers RF-87A and 87B

- Removed RE-32 I&P and RE-33 noble gas

PG&E

AFTER DESIGN CHANGE

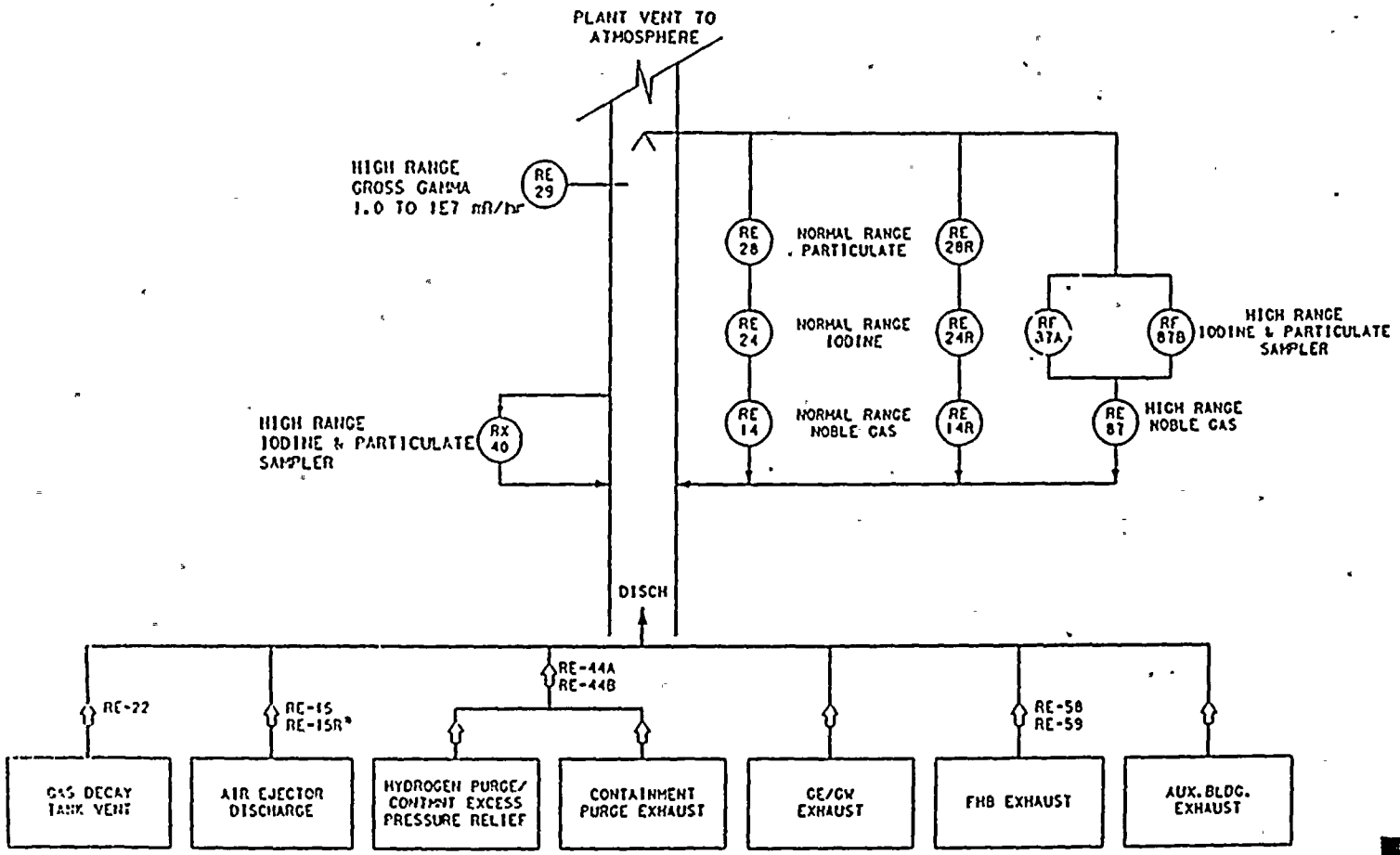

RADIOIODINES AND PARTICULATES ANALYSIS PASS ECG DEVELOPMENT

- Installation of 1993 DRMS upgrade required RX-40 to be taken out for a short period
- Regulatory guidance did not limit equipment allowed outage time (AOT)
- DCPP developed equipment control guideline (ECG) program to specify AOTs for selected non-TS equipment
  - 30 day AOT generally provided for post-accident instrumentation
- ECG 11.1 was developed for PASS and used to guide 1993 design upgrade

PG&E

RADIOIODINES AND PARTICULATES ANALYSIS
ECG 11.1 REQUIREMENTS

- Specifies RE-32 as principal method
- Specifies RX-40 and RE-24 as alternates
  - RX-40 GDC-19 qualified
  - RE-24 not GDC-19 qualified
- Requires verification that an alternate method to RE-32 is available within 7 days
- Requires restoration of RE-32 in 30 days

PG&E

RADIOIODINES AND PARTICULATES ANALYSIS CHRONOLOGY

2/26/93	During the DRMS upgrade, RE-32 and RX-40 were declared inoperable and reliance placed on alternate RE-24.
3/4/93	PAMS panel clearance activities completed and RX-40 reenergized (without power 5 days 16 Hrs).
3/5/93	Functional test of RX-40 initially identified high sample flow.
3/9/93	RX-40 reevaluated and flow found acceptable. Declared RX-40 operable (inoperable 12 days).

PG&E

RADIOIODINES AND PARTICULATES ROOT CAUSE ANALYSIS

- ECG 11.1 was inaccurate; RX-40 should have been identified as the primary method with 30-day AOT. In addition, RE-32 and RE-24 should have been identified as prudent alternatives, noting RE-24 did not meet GDC-19.

- RX-40 actual outage time was reasonable.

PG&E

RADIOIODINES AND PARTICULATES ANALYSIS CORRECTIVE ACTIONS

- Completed implementation of DRMS upgrade to enhance capabilities of overall system
- EP RB-12 (iodine and particulate sampling during accidents) revised to include use of new radiation monitors
- STP G-14 and ECG 11.1 revised to reflect new configuration and GDC-19 equipment as primary

PG&E

BEFORE DESIGN UPGRADE

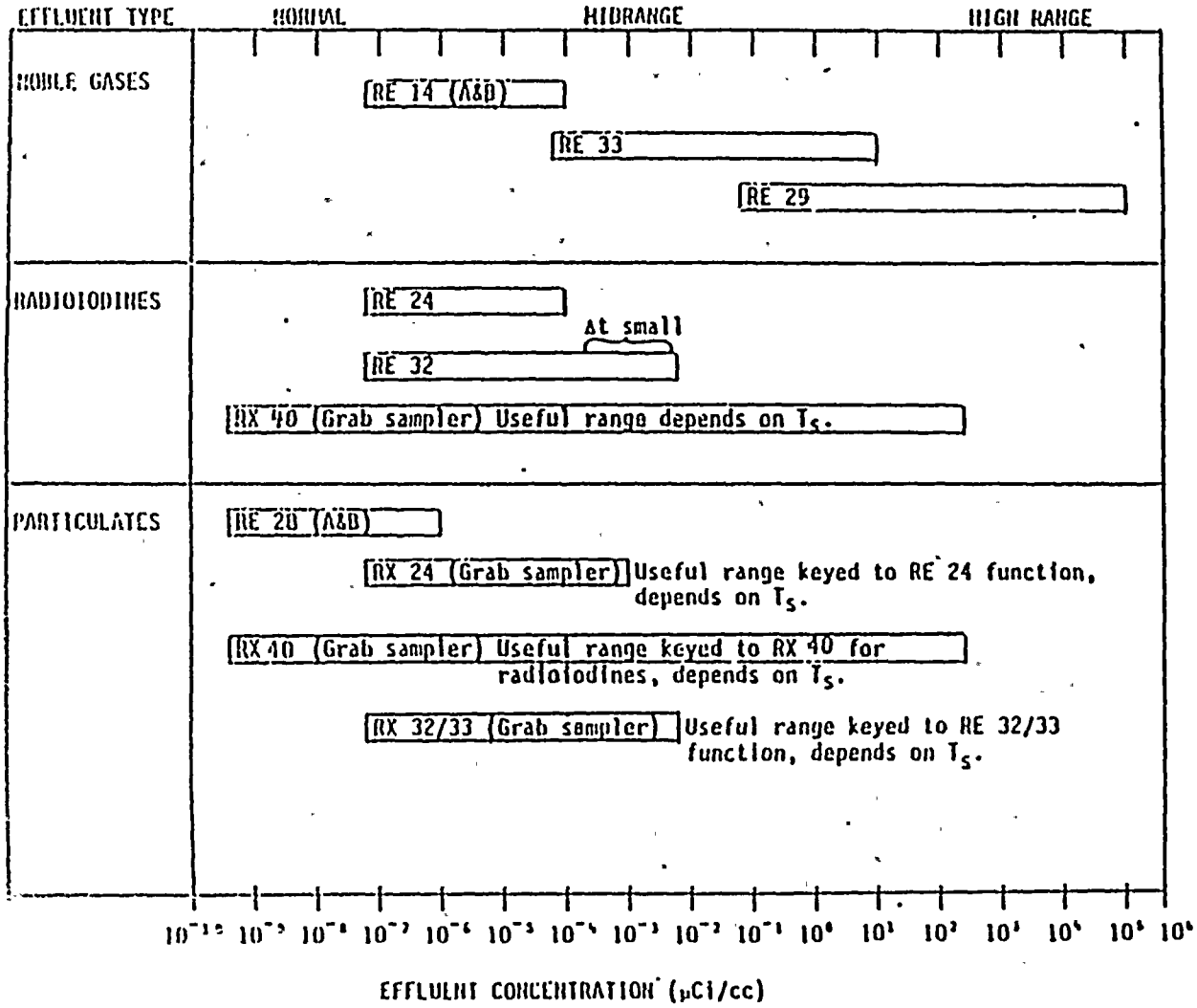

AFTER DESIGN UPGRADE

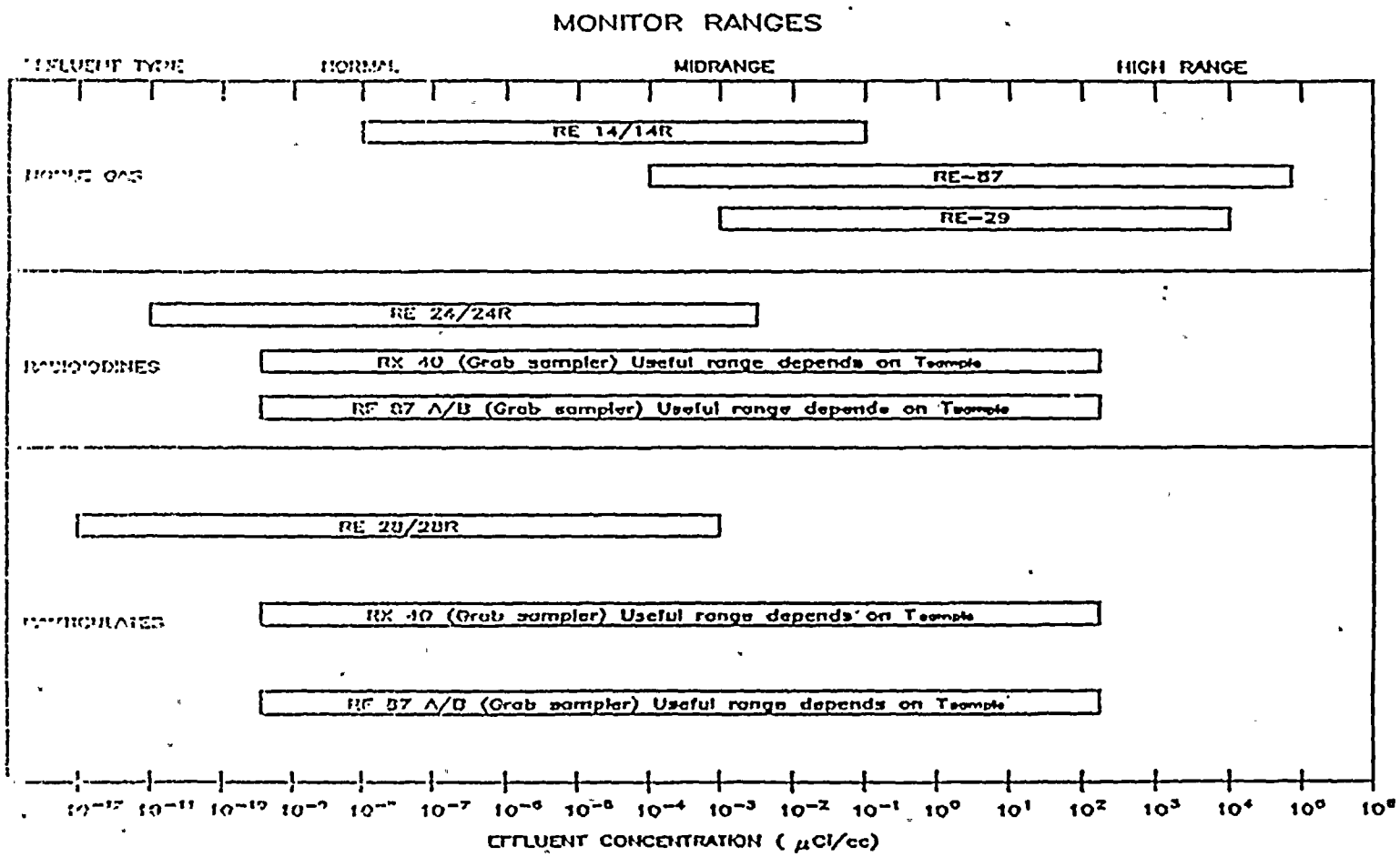

RADIOIODINES AND PARTICULATES ANALYSIS SAFETY SIGNIFICANCE

- RX-40 not used for mitigation of design basis accidents
- RX-40 is only needed for a worst case accident
- Even in a worst case accident, other methods and equipment are available to develop protective action recommendations:
  - EP R-2, release of airborne radioactive materials
  - Emergency assessment and response system (EARS)
  - RB-9, calculation of release rates
  - RB-11, dose calculations and projections
  - RB-7 and RB-8, field monitoring
- RX-40 considered inoperable 12 days (within 30-day AOT)
- Safety significance very low

PG&E

RADIOIODINE AND PARTICULATES ANALYSIS OVERVIEW

- Actual outage time for RX-40 was reasonable
- Equipment control guidelines did not accurately reflect primary and backup equipment designation
- DRMS upgrade and procedural corrective actions have already been implemented
- Safety significance very low

PG&E

RC DISSOLVED HYDROGEN ANALYSIS
NRC ISSUES

- Low availability of Unit 2 in-line monitor
- No 10 CFR 50.59 for gas chromatograph (GC) backup method deletion
- After GC method deletion, backup methods did not meet GDC-19 requirements

PG&E

GB21

REACTOR COOLANT DISSOLVED HYDROGEN ANALYSIS NUREG-0737 REQUIREMENTS

- Capability to sample and analyze reactor coolant dissolved hydrogen within 3 hours with less than 5 REM wholebody dose to any individual

- If in-line monitoring used, backup grab sample capability must be provided and demonstrated to meet GDC-19

PG&E

RC DISSOLVED HYDROGEN ANALYSIS CHRONOLOGY

Original Design	Sentry remote grab sample GC primary method. Alternate methods are grab sample from PASS panel and primary sample system.
1987	10 CFR 50.59 performed for in-line monitor design change
12/89, 1/90	In-line monitor installed in Unit 2 and Unit 1 as enhancement to improve reliability of RCS dissolved hydrogen and containment atmosphere analysis.
4/91	In-line monitors added to program as primary method. Training and procedures in place.
8/92	Removed GC for hydrogen from procedures as a backup
8/92 - 2/93	Recurring failures of Unit 2 in-line monitor

PG&E

RC DISSOLVED HYDROGEN CHRONOLOGY SUMMARY

- PG&E was in non-conformance with the regulations from the time the GC backup was not available
- A written 50.59 was not performed in 8/92 when the GC was removed as the backup. However, a safety screen was performed that indicated a written 50.59 was not required.
- The Unit 2 in-line monitor had low availability from 8/92 to 2/93

PG&E

DISSOLVED HYDROGEN DETECTOR ASSEMBLY

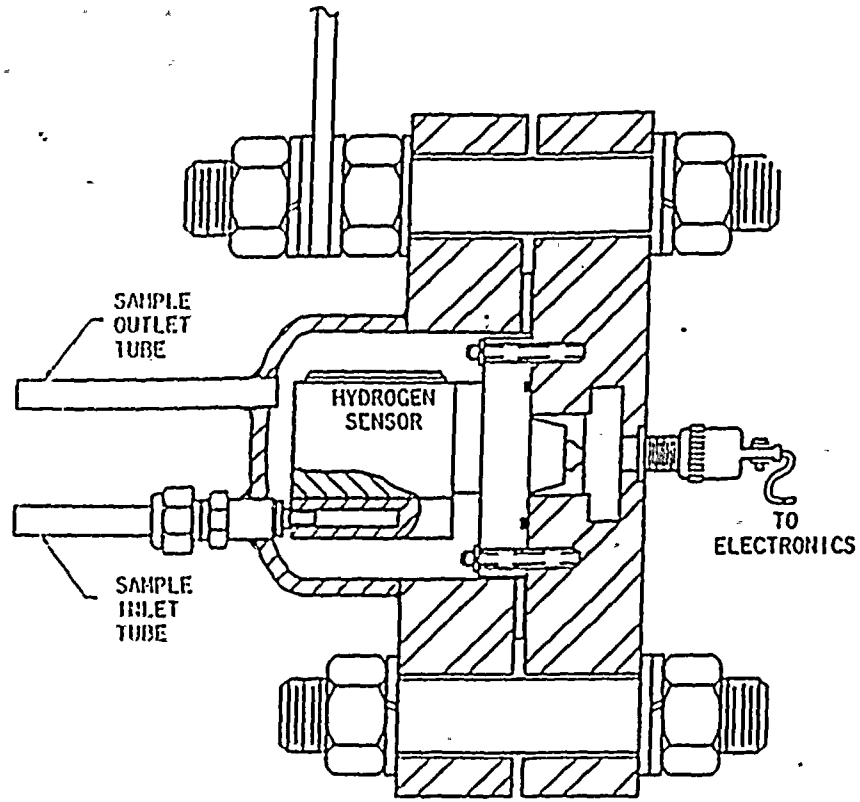

PG&E

UNIT 2 CEL-1109
MAINTENANCE ACTIVITIES 8/92-4/93

8/92	Replaced Cell and Performed Electronic Calibration
10/92	Replaced Cell Twice and Electronic Calibration Performed. (Vendor Consulted)
11/92	Electronic Calibration .
11/92 & 1/93	Meetings with PG&E Engineering to Discuss Cell Replacement
2/93.	Replaced Cell and Performed Electronic Calibration
4/93	Replaced Cell and Performed Electronic Calibration with Vendor Assistance

PG&E

CEL-1109 MAINTENANCE ACTIVITIES

5/93 Procedure enhancements in progress which will reduce cell soak time and improve cell availability

5/93 Recent cell performance satisfactory

PG&E

RC DISSOLVED HYDROGEN ANALYSIS ROOT CAUSE

- GC method deletion
  - Inadequate review of NUREG-0737 requirements
- Low availability of in-line monitor
  - Recurring in-line failures due to out of alignment in-line sensor inlet and sample inlet probe. Inlet probe also slightly bent.

PG&E

RC DISSOLVED HYDROGEN ANALYSIS CORRECTIVE ACTIONS

- New sensor probe installed for in-line system
- Sensor probe alignment tool is being manufactured
- Liquid coalescing filter installed to reduce moisture carryover in GC method.
- STP G-14 and EP RB-15B revised to reinstate GC method as backup
- Retraining completed on GC method
- Comprehensive review of PASS GDC-19 requirements in progress

PG&E

PRELIMINARY REVIEW OF NUREG 0737 COMPLIANCE

PARAMETER	PRINCIPAL METHOD	BACKUP
RC radionuclides	PASS grab sample	Not required
RC dissolved hydrogen	PASS in-line analysis	Remote grab sample
RC chloride	PASS remote grab sample	Not required
RC boron	PASS grab sample	Not required
RC oxygen	This parameter is recommended. Not required by NUREG 0737. DCPP uses an in-line monitor and has no GDC-19 qualified backup.	
Containment radio-nuclides	PASS grab sample	Not required
Containment hydrogen	In-line monitors Cel 82 & 83	Remote grab sample

PG&E

RC DISSOLVED HYDROGEN ANALYSIS SAFETY SIGNIFICANCE

- Not used for design basis accident mitigation
- Dissolved hydrogen was intended to check for a hydrogen bubble following a postulated severe accident
- Size of bubble unverifiable by hydrogen concentration
- Other noncondensibles could be present (N2 from accumulators, noble gases)
- Other systems are used to perform the same function including RVLIS, sub-cooled margin monitor, incore thermocouples, and pressurizer level/pressure response characteristics
- EP RB-14 - Core damage assessment procedure, does not utilize dissolved hydrogen analysis
- RCS venting procedure (EP FR-I.3) relies on RVLIS and not RC dissolved hydrogen measurements

QUOTE FROM NUREG/CR-4330 "REVIEW OF LIGHT WATER REACTOR REGULATORY REQUIREMENTS"

"However, other NRC regulations establish requirements for:

(1) A reactor vessel level indication system to detect the presence of a bubble and core uncovery, and

(2) A head vent system to remove noncondensible gases from the high points of the reactor coolant system. These systems adequately remove the potential for noncondensible gases to interfere with core cooling. The PASS sample requirement is redundant with these requirements."

PG&E

RC DISSOLVED HYDROGEN ANALYSIS SAFETY SIGNIFICANCE (CONT.)

- Proposed industry severe accident guidelines will not rely on RC dissolved hydrogen
- NRC and industry reviewing PASS requirements as marginal to safety (57 Federal Register 55156, November 24, 1992)
- Safety significance very low

PG&E

RC DISSOLVED HYDROGEN SUMMARY

- PG&E was not in full compliance with the regulations requiring a GDC-19 backup
- History of PASS enhancements
- Maintenance problems diligently pursued
- Timely and comprehensive corrective actions have now been taken
- Safety significance very low

PG&E