QUALIFICATION OF CONTROL SYSTEMS

AT DIABLO CANYON

50-275/323
Ltr 12-6-79
7912130271

NOVEMBER 1979

TABLE OF CONTENTS

1.1 Purpose:

On September 14, 1979, the NRC issued I&E Information Notice No. 79-22 (Appendix A) which indicated that there was a potential unreviewed safety question for Westinghouse plants. It stated that the performance of non-safety grade equipment subjected to an adverse environment could impact the protective functions performed by safety grade equipment. Four specific control systems were identified as possible sources of problems. This report documents our review of those systems.

1.2 Scope

This report addresses those control systems specifically mentioned in the notice, namely:

- Automatic Rod Control System
- Pressurizer Power Operated Relief Valve Control System
- Main Feedwater Control System
- Steam Generator Power Operated Relief Valve Control System

It is arranged by Section numbers as listed in the Table of Contents. Section 1 contains an introduction and summary. Sections 2 through 5 analyze the interactions of the specific control systems at Diablo Canyon Power Plant with the plant safety systems. Each analysis is organized in the following manner:

- Safety Implications
- Westinghouse Postulated Sequence of Events
- PGandE Analysis of Diablo Canyon
  - Assumptions made in the PGandE analysis
  - Relevant Design Features at Diablo Canyon
  - Diablo Canyon Sequence of Events
  - Termination of the Transient
- Resolutions
- Conclusions

Section 6 contains the conclusions for the entire report. This report includes only the analysis done to date. Continuing analyses will be performed to comply with the provisions of section 3.2 of NUREG 0585, TMI-2 Lessons Learned Task Force Final Report.

1.3 Definitions

DNB - Departure from nucleate boiling - a condition in which cooling the nuclear fuel is inadequate and damage to the cladding results.

High Energy Line - a pipe carrying reactor coolant, main steam, or feedwater

PORV - Power operated relief valve - Control valves on a pressure vessel which are used to reduce the number of operations required for spring loaded safety valves.

Safety Grade - Control equipment qualified to meet IEEE standards 323 and 344.

1.4 Summary

Our analysis shows that only the steam generator PORV control system is susceptible to unacceptable interactions due to high energy line breaks. PGandE will eliminate the problem by replacing all vulnerable components in the steam generator PORV Control system with components which are seismically and environmentally qualified to safety grade standards.

1.4.1 Automatic Rod Control System

The failure of the automatic rod control system due to a steam line break results in an uncontrolled rod withdrawal transient which is terminated by an overtemperature delta T or other reactor trip. This transient is equivalent to the one analyzed in Section 15.2.2 of our Final Safety Analysis Report and is acceptable from a safety standpoint.

1.4.2 Pressurizer Power Operated Relief Valve (PORV) Control System

All components of the pressurizer PORV control system located inside containment are seismically and environmentally qualified to the same standards as safety grade components. Therefore, the equipment in this system is considered not to fail in any postulated environment, and will not impact on protective functions.

1.4.3 Main Feedwater Control

The postulated failure in the main feedwater control system results in a low-low water level in all four steam generators at the time of reactor trip on low-low steam generator water level. This transient is less severe than the loss of feedwater accident analyzed in section 15.2.8 of our Final Safety Analysis Report and is considered acceptable from a safety standpoint.

1.4.4 Steam Generator Power Operated Relief Valve (PORV) Control System

The postulated failure of the steam generator (PORV) control system could result in the blowdown to atmosphere of two steam generators unless prevented by operator action. This condition has not been analyzed in our Final Safety Analysis Report and is considered unacceptable from a safety standpoint. We are, therefore, replacing all vulnerable components of the steam generator PORV control systems with components which are seismically and environmentally to the same standards as safety grade equipment. This replacement will prevent the uncontrolled blowdown of two steam generators without operator action.

2. Automatic Rod Control System

2.1 Safety Implications

A simplified block diagram of the automatic rod control system is shown in Figure 7.7-1 of the Diablo Canyon FSAR. The power mismatch compensation unit uses a power range nuclear flux signal to develop an input to the rod speed unit. The power mismatch compensation unit causes the control rods to withdraw when the nuclear flux signal decreases to less than the turbine load signal. In the event of a main steam line break inside containment, the adverse environment could cause the nuclear flux detectors to fail low causing the rods to withdraw. This would cause the reactor power to increase to a level which could possibly damage the fuel cladding, allowing the radioactive fission products to escape to the reactor coolant.

2.2 Westinghouse Postulated Sequence of Events

a) Reactor power is between 70 and 100 percent and the rod control system is in automatic.

b) An intermediate (0.25 to 1.00 square feet) steamline break occurs inside reactor containment. The break is too small to cause steam/feedwater mismatch.

c) Steam from the break causes an adverse environment inside containment. This adverse environment causes the reactor excore neutron detectors to fail low indicating a lower than actual reactor nuclear power level.

d) This lower excore nuclear power signal causes the rod control system to withdraw the control rods.

e) This control rod withdrawal increases the reactor power and the departure from nucleate boiling ratio (DNBR) drops to an undetermined value before the reactor trips.

2.3 PGandE Analysis of Diablo Canyon

2.3.1 Assumptions made in the PGandE analysis

This analysis assumes that the steam leak (which is less than 5% of the total steam flow) has the same affect on the secondary system as a five percent steam demand increase from the turbine.

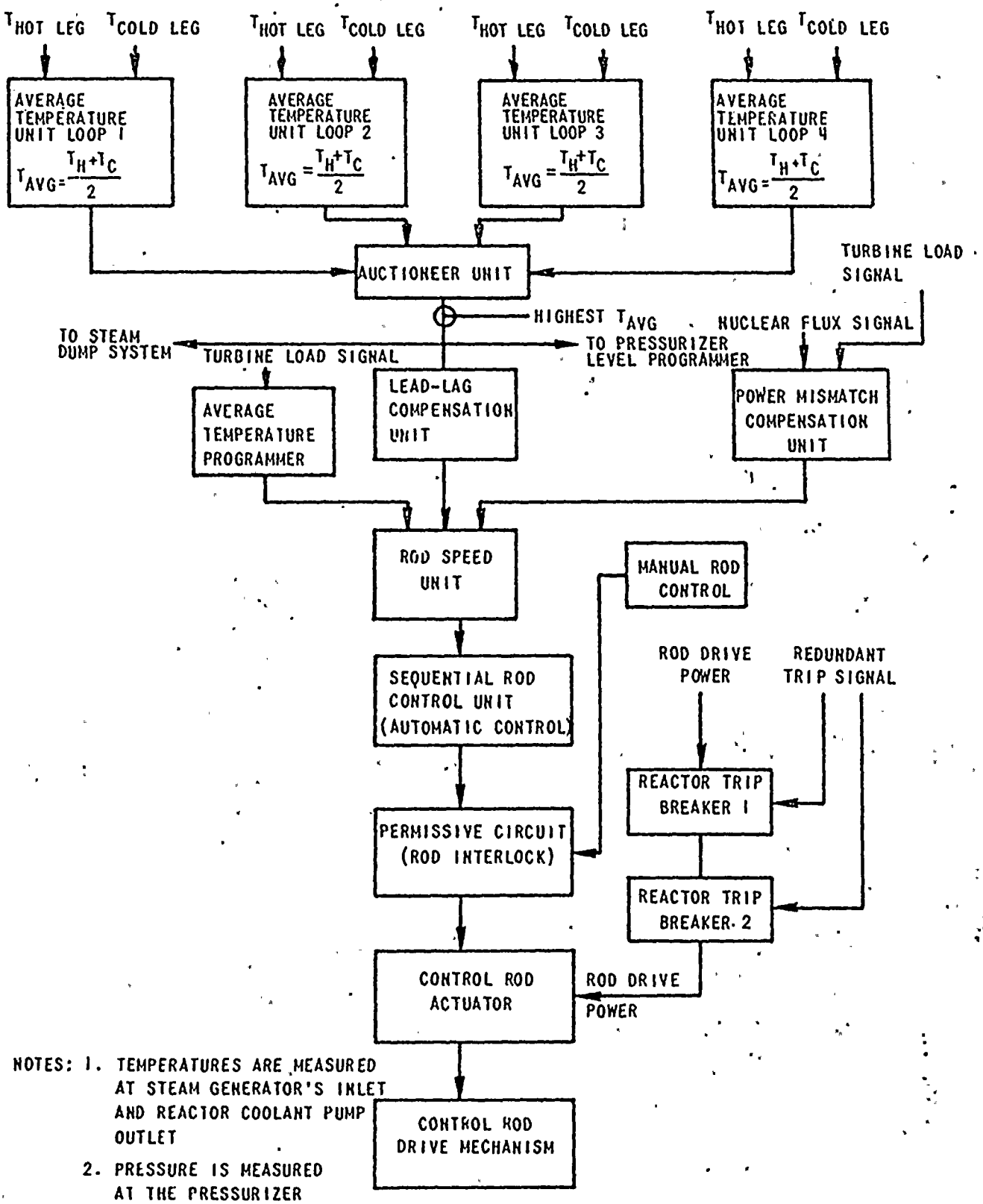

NOTES: 1. TEMPERATURES ARE MEASURED AT STEAM GENERATOR'S INLET AND REACTOR COOLANT PUMP OUTLET

2. PRESSURE IS MEASURED AT THE PRESSURIZER

UNITS 1 AND 2
DIABLO CANYON SITE

FIGURE 7.7-1

SIMPLIFIED BLOCK DIAGRAM OF REACTOR CONTROL SYSTEM

2.3.2 Relevant Design Features at Diablo Canyon

The power range excore detectors at Diablo Canyon are:

a) Not environmentally qualified to IEEE-323.

b) Manufactured by Westinghouse Tube Division.

c) Rated for continuous operation at 135°F and for operation at less than eight hours at 175°F.

d) Located such that direct impingement by steam from a steamline break is not possible.

e) Have upper and lower halves which are affected differently, decreasing the overtemperature delta T setpoint.

The reactor protection system at Diablo Canyon is provided with the following two trips which protect the reactor against downscale failures of the power range detectors:

a) The negative flux rate trip is provided as protection against a dropped control rod, but would also protect the reactor against a sudden downscale failure the power range detectors. This trip has a setpoint of 2.5 percent of full power per second. Two out of four logic is required.

b) The low power range trip will trip the reactor when 2 out of 4 detectors read below 25% of full power.

The automatic rod control system is provided with four rod withdrawal blocks which prevent control rod withdrawals under certain circumstances:

a) The overtemperature at rod block is a non-redundant control circuit which uses the same circuitry, but has a lower setpoint than the overtemperature delta T reactor trip. Its function is to prevent the reactor from reaching conditions which would lead to a overtemperature delta-T trip. Rod withdrawal would be halted by this block before reaching the overtemperature delta-T setpoint which is designed to protect against DNBR below 1.30.

b) The overpower delta-T rod block is also a non-redundant control circuit which uses the same circuitry but has a lower setpoint than the overpower delta-T reactor trip. Its function is to prevent the reactor from reaching conditions which would lead to an overpower delta-T trip.

c) The high neutron flux rod block prevents rod withdrawal on one out of four channels. The setpoint is 103 percent of full power.

d) A control Bank D upper limit of 220 steps is in effect at all times. This will limit the rod-worth available for an excursion. Since the control Bank D would be almost fully withdrawn at these power ranges, the reactivity addition would be small.

Each excore detector location contains a thermocouple which is monitored by the plant computer. The plant computer activates a main annunciator window on high temperature.

Plant Operating Parameters

a) Main steam flow at 100% power - 14.5×10^6 #/hr.
b) Steam/feedwater flow mismatch setpoint - 0.7×10^6 #/hr.
c) Maximum steam leak without mismatch - 5% of total.

2.3.3 <u>Diablo Canyon Sequence of Events</u>

a) Intermediate steamline break occurs (less than 0.7×10^6 pounds/hour which is less than 5 percent rated steam flow)

b) Escaping steam raises the temperature and humidity inside containment.

c) Steam affects the excore detectors.

d) The effect of the temperature and humidity on the system is to cause the rods to withdraw.

e) Nuclear power starts to increase.

2.3.4 Termination of the transient

The reactor will trip automatically when any of the following conditions occur:

a) Two detector signals decrease at more than 2.5 percent per second.

b) Two detectors signals decrease below 25 percent.

c) Two detectors exceed the 109 percent.

d) Two channels exceed the overpower delta-T setpoint.

e) Two channels reach the pressurizer high pressure trip.

f) Two channels reach the pressurizer high level setpoint.

If none of the trips mentioned above occurs, one of the following control rod withdrawal blocks may terminate rod withdrawal:

a) High flux on one detector (103 percent)

b) Overpower delta-T

c) Overtemperature delta-T

d) Bank D at 220 steps

In the unlikely event that none of the reactor trips or rod blocks occurs, a transient less severe than the uncontrolled rod withdrawal at power analyzed in section 15.2.2 of the FSAR (Appendix B) occurs. DNBR remains above 1.3 at all times during the transient.

2.4 Resolution

Since the FSAR has already analyzed the case of an uncontrolled rod withdrawal from full power and determined that DNBR does not decrease below 1.30, no action is required. Westinghouse is in the process of attempting to qualify the excore detectors to IEEE-323-74, and the NRC will be notified if they are successfully qualified.

2.5 Conclusion

No unresolved safety question exists concerning the automatic Rod Control System.

3. Pressurizer PORV Control System

3.1 Safety Implications

A block diagram of the pressurizer pressure control system is given in Figure 7.7-4 of the Diablo Canyon Final Safety Analysis Report. The PORV's are controlled from the pressurizer pressure signal. A failure of the pressurizer pressure transmitter due to adverse environmental conditions could cause the PORV's to open and the result would be a small loss of coolant accident in the pressurizer steam space as occurred at Three Mile Island.

3.2 Westinghouse Postulated Sequence of Events

a) The plant is operating at full load

b) A rupture occurs in a main feedwater line inside containment. The feedwater line break is too small to activate the main steam and feedwater flow mismatch safety injection and reactor trip.

c) Feedwater and the contents of the steam generator spill into the containment.

d) Steam generator water level drops and the reactor trips on low-low water level.

e) Auxiliary feedwater pumps start on low-low steam generator water level.

f) The turbine trips on reactor trip.

g) The feedwater inside containment flashes to steam at the lower pressure and affects the pressurizer pressure transmitter causing it to fail high.

h) The control system opens the PORV's in trying to lower pressurizer pressure to the pressure setpoint.

i) Once open, the PORV sticks open creating a small loss of coolant accident in the pressurizer steam space. This is the same failure which occurred at Three Mile Island.

j) Pressure in the primary system decreases and hot leg boiling results.

k) Loss of cooling causes fuel cladding failures which allow fission products to escape from the fuel rods and enter the reactor coolant.

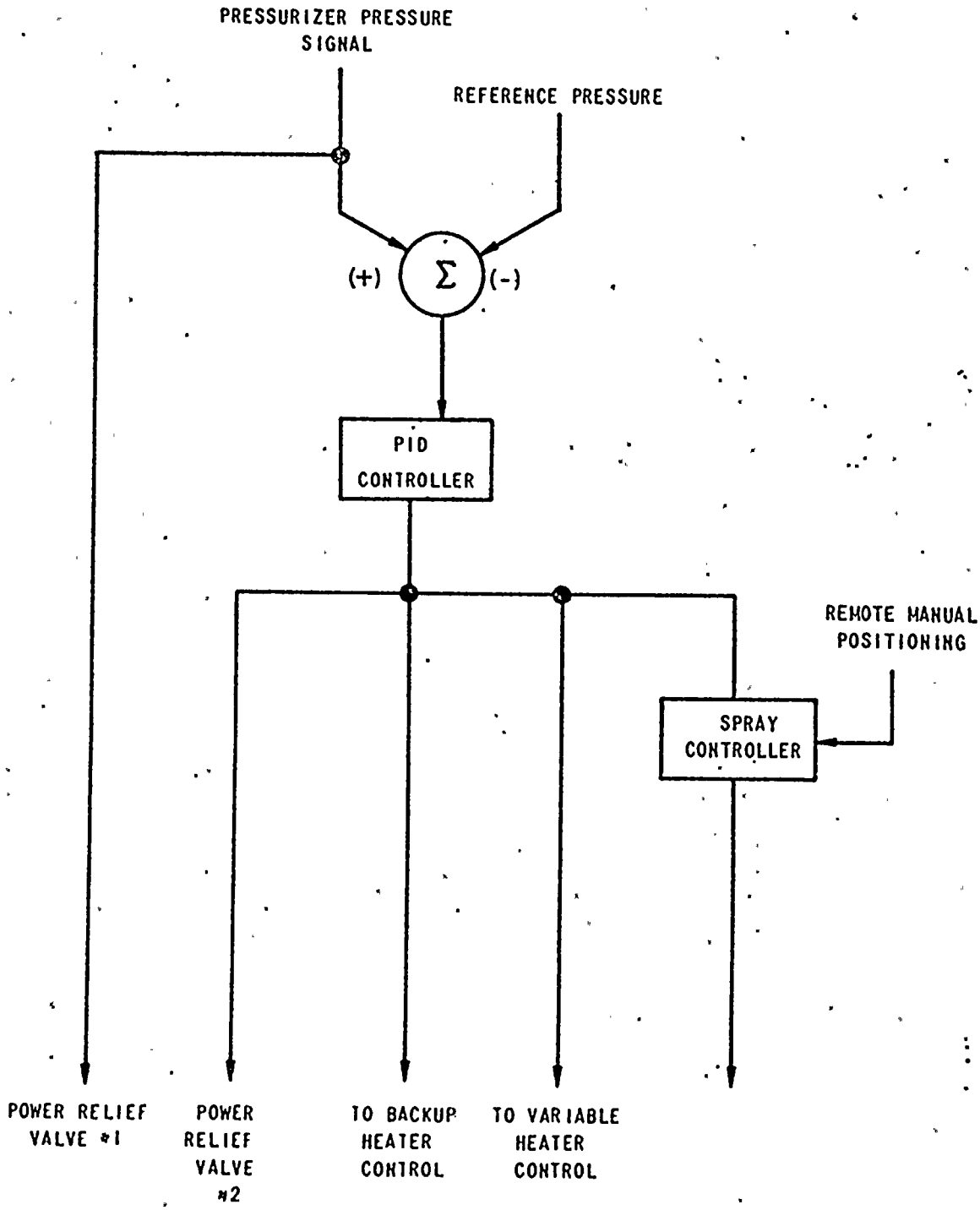

UNITS 1 AND 2
DIABLO CANYON SITE

FIGURE 7.7-4

BLOCK DIAGRAM OF PRESSURIZER PRESSURE CONTROL SYSTEM

3.3 PGandE Analysis of Diablo Canyon

3.3.1 Assumptions made in the PGandE analysis

Equipment which is environmentally qualified to IEEE-323 and Diablo Canyon Loss of Coolant Accident Conditions will not fail in an adverse environment.

3.3.2 Relevant Design Functions at Diablo Canyon

The components of the PORV control system located inside containment are:

a) Pressurizer pressure transmitters

b) Transmitter wiring

c) Solenoid valves

d) Solenoid valve wiring

e) Air lines and valves

All the components are qualified for loss of primary coolant conditions which is more severe than a feedwater line break inside containment.

a) The pressurizer pressure transmitters are Rosemount Model 1152 transmitters which have been qualified to IEEE-323-1971. The qualification is documented by the Rosemount Report 117415 dated September 19, 1975.

b) Wiring to the pressure transmitters is qualified to meet Diablo Canyon LOCA conditions. The wire is supplied by Continental Wire and Cable Corporation. The qualification of this wire documented in Continental Wire and Cable Corporation test report dated June 1, 1973.

c) The solenoid valves in the PORV System are ASCO Model NP8316 with viton elastomer parts. They are qualified for LOCA conditions in accordance with ASCO Qualification Specification AQS-21678, Revision B, dated February 15, 1978.

d) Wiring to the solenoid valves is qualified to meet Diablo Canyon LOCA conditions. The wire is Bostrad 7 supplied by Boston Insulated Wire and Cable Company (BIW). The qualification of this wire is documented in BIW's Report B904, dated July 15, 1970.

3.3.3 Diablo Canyon Sequence of Events

a) Steps a through f are the same as in the Westinghouse sequence of events (section 3.2).

g) Since all components are environmentally qualified to post-break conditions, the pressurizer transmitter does not fail and the pressurizer PORV's do not open.

3.3.4 Termination of the Transient

This section is not applicable since the transient does not occur.

3.4 Resolution

Since all components of the pressurizer PORV control circuit are already qualified to safety grade standards, no action is required.

3.5 Conclusion

An unresolved safety question does not exist at Diablo Canyon because of the pressurizer PORV control circuit.

4. Main Feedwater Control System

4.1 Safety Implications

A block diagram of the main feedwater control system is shown in Figure 7.7-6 of the Diablo Canyon Final Safety Analysis Report. The position of the main feedwater control valve is partially determined by the feedwater flow signal. A failure of the feedwater flow transmitter could cause the feedwater control valve to partially close. This would restrict the flow of feedwater to the steam generators. Since water is required in the steam generators to remove decay heat after a reactor trip, it is postulated that the steam generators might not contain enough water at the time of reactor trip to provide adequate core cooling.

4.2 Westinghouse Postulated Sequence of Events

a) The reactor is operating at full power.

b) A small feedwater line break occurs in the auxiliary building. The feedwater line break is too small to activate the main steam and feedwater line flow mismatch.

c) Feedwater spills out of the break into the auxiliary building and flashes to steam at the lower pressure.

d) For steam generators which have level control systems in the Auxiliary Building, steam from the break causes the level transmitters to fail and generate a false high level signal. The control systems then try to lower the water level to the setpoint.

e) The affected steam generators all reach low-low water level at the same time.

f) The reactor trips with these steam generators at low-low water level.

g) It is undetermined at this time if the water inventory in the steam generators is sufficient to prevent fuel clad damage.

4.3 PGandE Analysis of Diablo Canyon

4.3.1 Assumptions made in the analysis

a) Only those components exposed to the adverse environment fail.

b) The exposed components fail in the worst possible way.

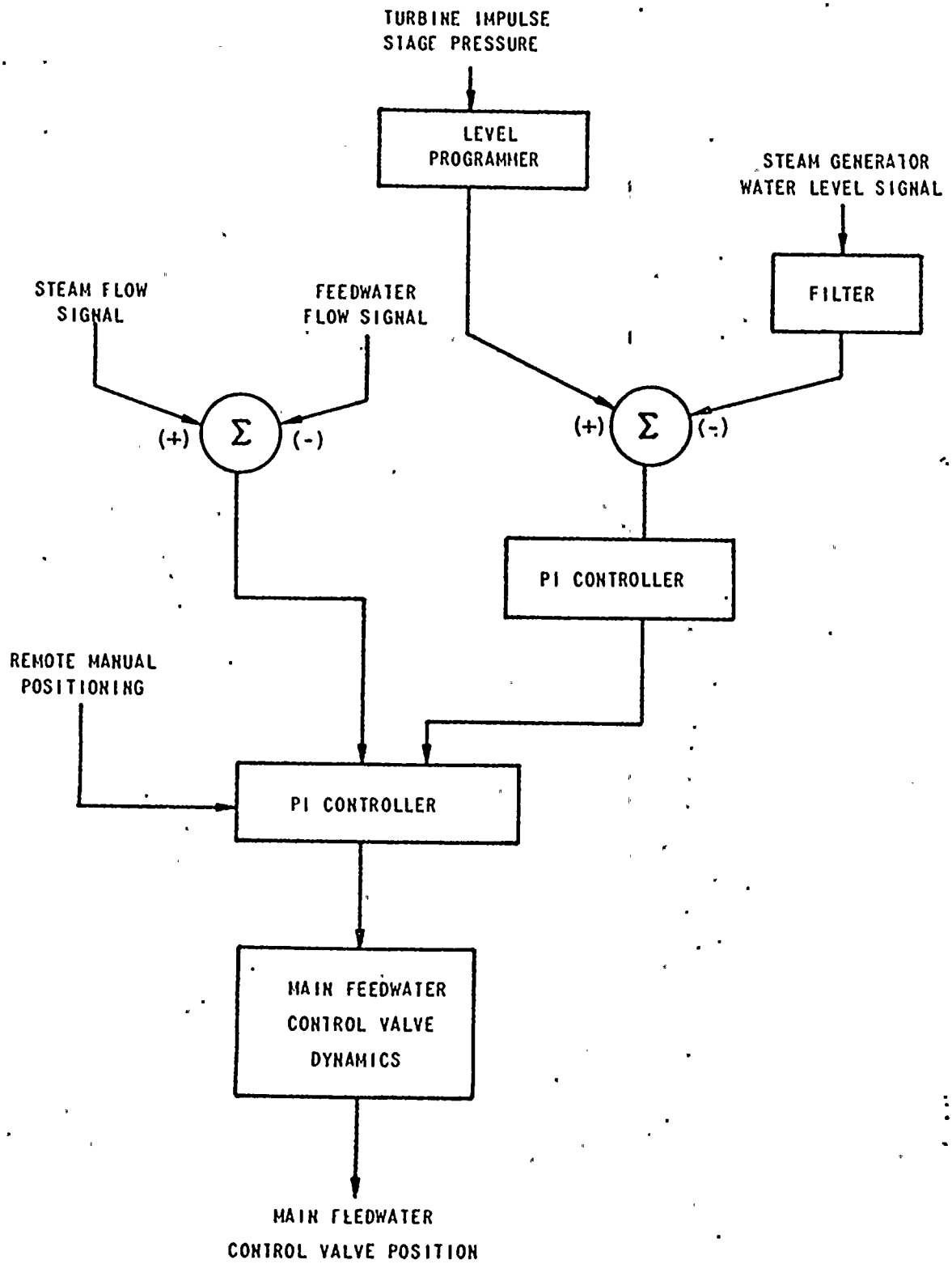

UNITS 1 AND 2
DIABLO CANYON SITE

FIGURE 7.7-6

BLOCK DIAGRAM OF STEAM GENERATOR WATER LEVEL CONTROL SYSTEM

4.3.2 Relevant Design Features at Diablo Canyon

The configuration of the Diablo Canyon steam generator associated equipment is shown in Figure 1. A break in feedwater line 3 or 4 could affect only the levels in steam generators 3 and 4, since the feedwater lines and control system components for steam generators 1 and 2 are located outdoors. The only control system components located in the auxiliary building are the feedwater flow transmitters for steam generators 3 and 4, and these are located in NEMA-12 mechanical panels.

The following design parameters are used at Diablo Canyon:

a) Range of feedwater flow transmitters 0-138%

b) Normal steam generator operating level - 44% span

c) Low-low steam generator reactor trip - 10% span

The feedwater control system is designed to regulate the main feedwater control valve position.
The controller functions according to equation (4-1).

$$\frac{dP}{dt} = 3\ (LS-L) + (FS-FW) \qquad (4\text{-}1)$$

where:

P = Feedwater control valve position

LS = Programmed level setpoint from turbine impulse pressure in percent

L = Steam generator water level in percent

FS = Steam flow in percent

FW = Feedwater flow in percent

The steady state equilibrium value of the water level can be calculated by setting the time derivative of valve position equal to zero and solving for level.

$$L = LS + \frac{(FS-FW)}{3} \qquad (4\text{-}2)$$

Steam Generator	1	2	3	4
Feedwater Line Located in Auxiliary Building	No	No	Yes	Yes
Control System Components Located in Auxiliary Building	No	No	Yes	Yes
Motor Driven Auxiliary Feedwater Pump Used to Supply Feedwater	2	2	3	3
Supplies Steam to Turbine Driven Auxiliary Feedwater Pump.	No	Yes	Yes	Yes

FIGURE 1 - DIABLO CANYON STEAM GENERATOR EQUIPMENT CONFIGURATION

The range of the feedwater flow channel is 0 to 138 percent of full flow, so that in the worst case, failure of the feedwater flow transmitter, the indicated flow would be 138% of full flow. At full load, the steam flow would be 100 percent and programmed level setpoint would be 44 percent. Substituting those values into equation 4-2, yields:

$$L = 44\% - \frac{138-100}{3}\% = 31.3\%$$

4.3.3 Diablo Canyon Sequence of Events

a) The reactor is operating at full power.

b) A small feedwater line break occurs in the auxiliary building. The feedwater line break is too small to activate the main steam and feedwater line flow mismatch safety injection and reactor trip.

c) Feedwater and steam generator water inventory flashes to steam at the lower pressure and affects the feedwater transmitters for feedwater lines 3 and 4.

d) The water level in the two affected steam generators (3 and 4) would level off at 31 percent and the water level in the two unaffected steam generators (1 and 2) would remain at 44%.

e) The steam generator water level in steam generators 3 and 4 equilibrates at 31.3%.

f) In this condition, all four steam generators have an average water level of:

$$(2/4)\ (44) + (2/4)\ (31\%) = 37.5\%$$

4.3.4 Termination of the Transient

No reactor trip occurs, since even in steam generators 3 and 4, the water level remains above the reactor trip setpoint of ten percent of span. The operator is alerted to the low water level in steam generators 3 and 4 by the plant computer and begins a controlled shutdown. A trip from this condition is less severe than the loss of feedwater transient analyzed in section 15.2.8 of the FSAR (appendix C).

4.4 Resolution

No modifications of the main Feedwater Control System are required at Diablo Canyon. The analysis has shown that even the most severe failure is less significant than the condition analyzed in section 15.2.8 of FSAR (Appendix C)

4.5 Conclusion

An unresolved safety question does not exist at Diablo Canyon regarding the main Feedwater Control System.

5. Steam Generator PORV Control System

5.1 Safety Implications

A system logic diagram of steam generator PORV Control System (called atmospheric relief valves) is given in Figure 7.2-1 (sheet 10) of the Diablo Canyon Final Safety Analysis Report. The PORV's are controlled using a steam line pressure signal. A failure of the steam line pressure transmitter due to adverse environmental conditions could cause the PORV's to open and the result would be a small steam line break. This would result in the steam generator blowing down to atmosphere with two undesirable consequences:

a) The uncontrolled loss of steam from the steam generator would cause the reactor coolant temperature to decrease reducing shutdown margin and a possible return to criticality, and

b) The loss of steam to power the turbine-driven auxiliary feedwater pump.

5.2 Westinghouse Postulated Sequence of Events

a) The reactor is operating at 100 percent power.

b) A feedwater line ruptures in the auxiliary building. The feedwater line break is too small to activate the main steam and feedwater flow mismatch and safety injection.

c) Feedwater and steam generator water spills out of the break and flashes to steam at the lower pressure.

d) The reactor trips on low-low water level in affected steam generator.

e) Auxiliary feedwater pumps start on low-low steam generator water level.

f) The turbine trips on reactor trip.

g) The three unaffected steam generators begin repressurizing on steam line isolation.

h) The steam from the break affects the steam generator PORV control systems for vulernable steam generators causing them to fail high.

i) The steam generator control system opens the PORV's trying to reduce steam generator pressure to the pressure setpoint.

j) The PORV's fail open and blowdown to atmosphere.

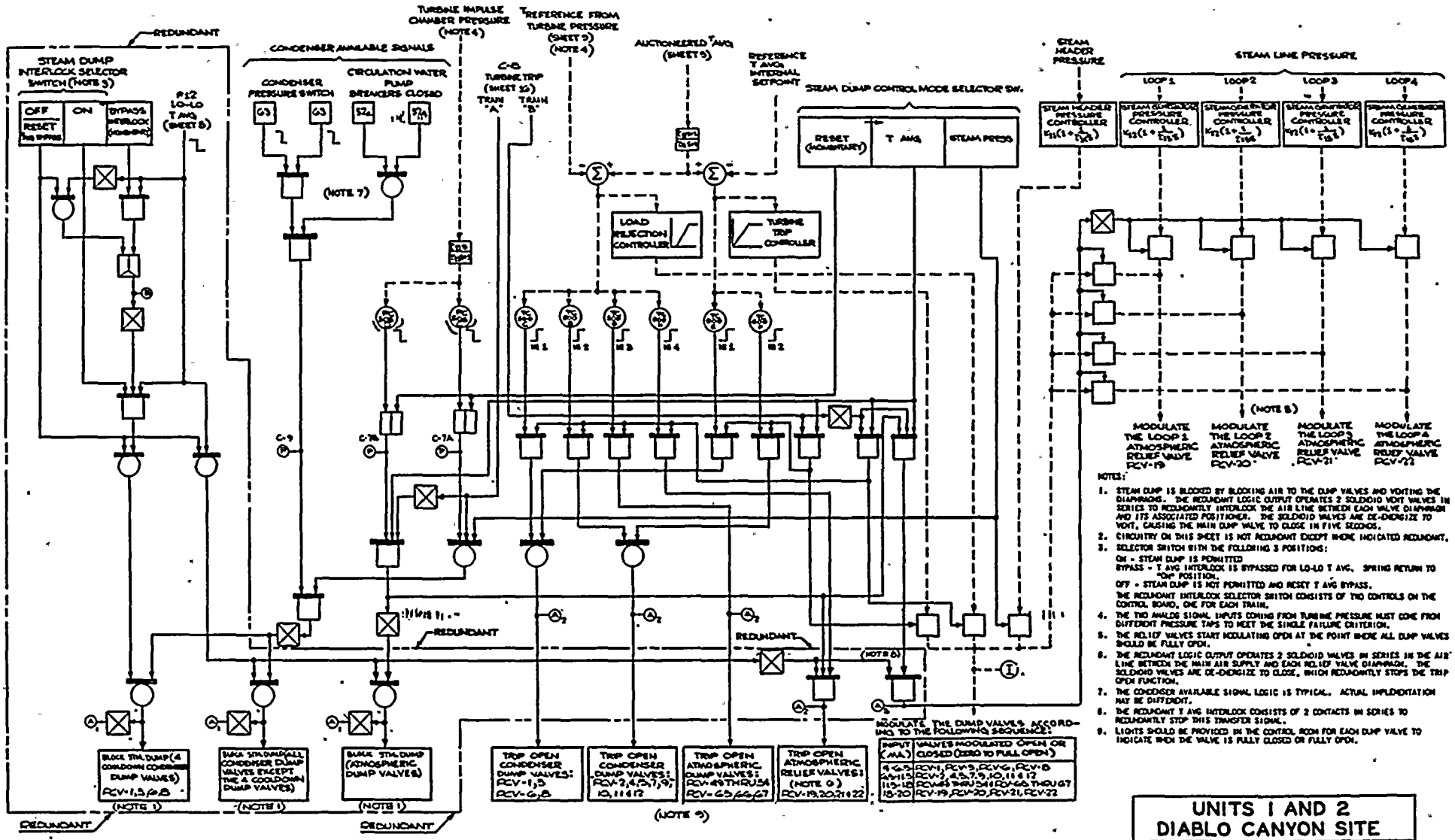

NOTES:

1. STEAM DUMP IS BLOCKED BY BLOCKING AIR TO THE DUMP VALVES AND VENTING THE DIAPHRAGMS. THE REDUNDANT LOGIC OUTPUT OPERATES 2 SOLENOID VENT VALVES IN SERIES TO REDUNDANTLY INTERLOCK THE AIR LINE BETWEEN EACH VALVE DIAPHRAGM AND ITS ASSOCIATED POSITIONER. THE SOLENOID VALVES ARE DE-ENERGIZE TO VENT, CAUSING THE MAIN DUMP VALVE TO CLOSE IN FIVE SECONDS.
2. CIRCUITRY ON THIS SHEET IS NOT REDUNDANT EXCEPT WHERE INDICATED REDUNDANT.
3. SELECTOR SWITCH WITH THE FOLLOWING 3 POSITIONS:
   ON - STEAM DUMP IS PERMITTED
   BYPASS - T AVG INTERLOCK IS BYPASSED FOR LO-LO T AVG. SPRING RETURN TO "ON" POSITION.
   OFF - STEAM DUMP IS NOT PERMITTED AND RESET T AVG BYPASS.
   THE REDUNDANT INTERLOCK SELECTOR SWITCH CONSISTS OF TWO CONTROLS ON THE CONTROL BOARD, ONE FOR EACH TRAIN.
4. THE TWO ANALOG SIGNAL INPUTS COMING FROM TURBINE PRESSURE MUST COME FROM DIFFERENT PRESSURE TAPS TO MEET THE SINGLE FAILURE CRITERION.
5. THE RELIEF VALVES START MODULATING OPEN AT THE POINT WHERE ALL DUMP VALVES SHOULD BE FULLY OPEN.
6. THE REDUNDANT LOGIC OUTPUT OPERATES 2 SOLENOID VALVES IN SERIES IN THE AIR LINE BETWEEN THE MAIN AIR SUPPLY AND EACH RELIEF VALVE DIAPHRAGM. THE SOLENOID VALVES ARE DE-ENERGIZE TO CLOSE, WHICH REDUNDANTLY STOPS THE TRIP OPEN FUNCTION.
7. THE CONDENSER AVAILABLE SIGNAL LOGIC IS TYPICAL. ACTUAL IMPLEMENTATION MAY BE DIFFERENT.
8. THE REDUNDANT T AVG INTERLOCK CONSISTS OF 2 CONTACTS IN SERIES TO REDUNDANTLY STOP THIS TRANSFER SIGNAL.
9. LIGHTS SHOULD BE PROVIDED IN THE CONTROL ROOM FOR EACH DUMP VALVE TO INDICATE WHEN THE VALVE IS FULLY CLOSED OR FULLY OPEN.

UNITS 1 AND 2
DIABLO CANYON SITE

FIGURE 7.2-1
INSTRUMENTATION AND CONTROL
SYSTEM LOGIC DIAGRAMS
(SHEET 10 OF 16)

k) As the steam generators depressurize, steam to the turbine driven auxiliary feedwater pump is lost and the pump fails to supply auxiliary feedwater to any steam generators.

l) A single active failure occurs when a motor driven auxiliary feedwater pump fails. If only one motor driven auxiliary feedwater pump remains in service, it is undetermined if adequate auxiliary feedwater flow for core cooling is available.

5.3 PGandE Analysis of Diablo Canyon

5.3.1 Assumptions made in the analysis

a. Only those components of the control system exposed to hostile environmental fail.

b. Those components which fail do so in the worst possible way.

5.3.2 Relevant Design Features of Diablo Canyon

The configuration of steam generator associated equipment at Diablo Canyon is shown in Figure 1. The feedwater lines and PORV control system components for steam generators 1 and 2 are located outdoors so that a feedwater line failure would not cause an environmental failure of the control system for these steam generators. A failure of either feedwater line 3 or 4 could cause an environmental failure of some control system components on steam generators 3 and 4 resulting in the blowdown of both steam generators to atmosphere. This transient has not been analyzed in our Final Safety Analysis Report.

5.3.3 Diablo Canyon Sequence of Events

a) The reactor is operating at 100 percent power.

b) A feedwater line to steam generator 3 or 4 ruptures in the auxiliary building.

c) The feedwater line break is too small to activate the main steam and feedwater flow mismatch reactor trip.

d) Feedwater and steam generator water spills out the break and flashes to steam at the lower pressure.

e) The reactor trips on low-low water level in the affected steam generator.

f) Auxiliary feedwater pumps start on low-low steam generator water level.

g) The turbine trips on reactor trip.

h) The three unaffected steam generators begin repressurizing on steam line isolation.

i) The steam from the break affects the steam generators 3 and 4 pressure transmitters causing them to fail high.

j) The steam generator control system opens the PORV's trying to reduce steam generator pressure to the setpoint.

5.3.4 Termination of the Transient

The operator in the control room hears the steam flowing through the affected PORV's and switches control to manual and closes the valves. If the valves fail to close, the operator sends his assistant out to close the valves using the hand wheel.

5.4 Resolution

The sequence of events described requires operation action to terminate the transient. PGandE will, therefore, replace all control components subject to adverse environment with environmentally and seismically qualified components. This involves the pressure transmitters and wiring for steam generators 3 and 4.

6. Conclusions

We have examined the four specific control systems identified by Westinghouse as possible sources of problems. We found that one control system was not a problem, two resulted in transients less serious than those analyzed in the Diablo Canyon Final Safety Analysis Report, and one required operator action to terminate the transient. In the last case, the transmitters and wiring which are subject to adverse environment in an accident will be replaced by transmitters and wiring which is environmentally qualified to withstand the accident conditions without failing. We, therefore, believe that the unresolved safety question no longer exists at Diablo Canyon.

Appendix A

I&E Information Notice 79-22

Qualification of Control Systems

UNITED STATES
NUCLEAR REGULATORY COMMISSION
REGION V
1990 N. CALIFORNIA BOULEVARD
SUITE 202, WALNUT CREEK PLAZA
WALNUT CREEK, CALIFORNIA 94596

September 17, 1979

Docket Nos. 50-133
50-275
50-323

Pacific Gas and Electric Company
77 Beale Street
San Francisco, California 94105

Attention: Mr. Philip A. Crane, Jr.
Assistant General Counsel

Gentlemen:

The enclosed Information Notice No. 79-22 provides information with regard to a potential unreviewed safety question involving high energy lines and control systems.

Sincerely,

R. H. Engelken
Director

Enclosures:
1. Information Notice 79-22
2. List of IE Information Notices Issued in Last Six Months

cc w/enclosures:
W. Barr, PG&E
W. Raymond, PG&E
R. Ramsay, PG&E, Diablo Canyon
J. Worthington, PG&E
E. Weeks, PG&E, Humboldt Bay

bcc: CPUC Application No. 41212 (Humboldt Bay Unit No. 3)
CPUC Applications 49051 and 50028 (Diablo Canyon Units 1 and 2)
bbcc: Humboldt and Diablo Distributions

Accession No: 7908220112
SSINS: 6870

UNITED STATES
NUCLEAR REGULATORY COMMISSION
OFFICE OF INSPECTION AND ENFORCEMENT
WASHINGTON, D.C. 20555

September 14, 1979

IE Information Notice No. 79-22

QUALIFICATION OF CONTROL SYSTEMS

Public Service Electric and Gas Company notified the NRC of a potential unreviewed safety question at their Salem Unit 1 facility. This notification was based on a continuing review by Westinghouse of the environmental qualifications of equipment that they supply for nuclear steam supply systems. Based on the present status of this effort, Westinghouse has informed their customers that the performance of non-safety grade equipment subjected to an adverse environment could impact the protective functions performed by safety grade equipment. These non-safety grade systems include:

Steam generator power operated relief valve control system

Pressurizer power operated relief valve control system

Main feedwater control system

Automatic rod control system

These systems could potentially malfunction due to a high energy line break inside or outside of containment. NRC is also concerned that the adverse environment could also give erroneous information to the plant operators. Westinghouse states that the consequences of such an event could possibly be more limiting than results presented in Safety Analysis Reports, however, Westinghouse also states that the severity of the results can be limited by operator actions together with operating characterisitics of the safety systems. Further, Westinghouse has recommended to their customers that they review their systems to determine whether any unreviewed safety questions exist.

This Information Notice is provided as an early notification of a possibly significant matter. It is expected that recipients will review the information for possible applicability to their facilities. No specific action or response is requested at this time. If NRC evaluations so indicate, further licensee actions may be requested or required. If you have questions regarding this matter, please contact the Director of the appropriate NRC Regional Office.

No written response to this Information Notice is required.

Appendix B

Diablo Canyon Final Safety Analysis Report

Section 15.2.2

Uncontrolled Rod Cluster Control

Assembly Bank Withdrawal at Power

15.2.2 UNCONTROLLED ROD CLUSTER CONTROL ASSEMBLY BANK WITHDRAWAL AT POWER

Identification of Causes and Accident Description

Uncontrolled rod cluster control assembly bank withdrawal at power results in an increase in the core heat flux. Since the heat extraction from the steam generator lags behind the core power generation until the steam generator pressure reaches the relief or safety valve setpoint, there is a net increase in the reactor coolant temperature. Unless terminated by manual or automatic action, the power mismatch and resultant coolant temperature rise would eventually result in DNB. Therefore, in order to avert damage to the cladding the Reactor Protection System is designed to terminate any such transient before the DNBR falls below 1.30.

The automatic features of the Reactor Protection System which prevent core damage following the postulated accident include the following:

1. Power range neutron flux instrumentation actuates a reactor trip if two out of four channels exceed an overpower setpoint.

2. Reactor trip is actuated if any two out of four ΔT channels exceed an overtemperature ΔT setpoint. This setpoint is automatically varied with axial power imbalance, coolant temperature and pressure to protect against DNB.

3. Reactor trip is actuated if any two out of four ΔT channels exceed an overpower ΔT setpoint. This setpoint is automatically varied with axial power imbalance to ensure that the allowable transient heat generation rate (kw/ft) is not exceeded.

4. A high pressurizer pressure reactor trip actuated from any two out of four pressure channels which is set at a fixed point. This set pressure is less than the set pressure for the pressurizer safety valves.

5. A high pressurizer water level reactor trip actuated from any two out of three level channels which is set at a fixed point.

In addition to the above listed reactor trips, there are the following rod cluster control assembly withdrawal blocks:

1. High neutron flux (one out of four)

2. Overpower ΔT (two out of four)

3. Overtemperature ΔT (two out of four)

The manner in which the combination of overpower and overtemperature ΔT trips provide protection over the full range of Reactor Coolant System conditions is described in Chapter 7. This includes a plot (also shown as Figure 15.1-1) presenting allowable reactor coolant loop average temperature and ΔT for the design power distribution and flow as a function of primary coolant pressure. The boundaries of operation defined by the overpower ΔT trip and the overtemperature ΔT trip are represented as "protection lines" on this diagram. The protection lines are drawn to include all adverse instrumentation and setpoint errors so that under nominal conditions trip would occur well within the area bounded by these lines. The utility of this diagram is in the fact that the limit imposed by any given

DNBR can be represented as a line. The DNB lines represent the locus of conditions for which the DNBR equals 1.30. All points below and to the left of a DNB line for a given pressure have a DNBR greater than 1.30. The diagram shows that DNB is prevented for all cases if the area enclosed with the maximum protection lines is not traversed by the applicable DNBR line at any point.

The area of permissible operation (power, pressure and temperature) is bounded by the combination of reactor trips: high neutron flux (fixed setpoint); high pressure (fixed setpoint); low pressure (fixed setpoint); overpower and overtemperature ΔT (variable setpoints).

Analysis of Effects and Consequences

This transient is analyzed by the LOFTRAN[3] code. This code simulates the neutron kinetics, Reactor Coolant System, pressurizer, pressurizer relief and safety valves, pressurizer spray, steam generator, and steam generator safety valves. The code computes pertinent plant variables including temperatures, pressures, and power level. The core limits as illustrated in Figure 15.1-1 are used as input to LOFTRAN to determine the minimum DNBR during the transient. The core limits are calculated by applying the "R" grid spacer factor to the W-3 DNB correlation.

In order to obtain conservative values of DNBR the following assumptions are made:

1. Initial conditions of maximum core power and reactor coolant average temperatures and minimum reactor coolant pressure, resulting in the minimum initial margin to DNB.

2. Reactivity Coefficients - Two cases are analyzed:

   a. Minimum Reactivity Feedback. A zero moderator coefficient of reactivity is assumed corresponding to the beginning of core life. A variable Doppler power coefficient with core power is used in the analysis. A conservatively small (in absolute magnitude) value is assumed.

b. Maximum Reactivity Feedback. A conservatively large positive moderator density coefficient and a large (in absolute magnitude) negative Doppler power coefficient are assumed.

3. The reactor trip on high neutron flux is assumed to be actuated at a conservative value of 118 percent of nominal full power. The ΔT trips include all adverse instrumentation and setpoint errors, while the delays for the trip signal actuation are assumed at their maximum values.

4. The rod cluster control assembly trip insertion characteristic is based on the assumption that the highest worth assembly is stuck in its fully withdrawn position.

5. The maximum positive reactivity insertion rate is greater than that for the simultaneous withdrawal of the combination of the two control banks having the maximum combined worth at maximum speed. This is also much greater than the maximum reactivity insertion rate associated with withdrawal of a part length rod cluster control assembly.

The effect of rod cluster control assembly movement on the axial core power distribution is accounted for by causing a decrease in overtemperature and overpower ΔT trip setpoints proportional to a decrease in margin to DNB.

Results

Figures 15.2-4 and 15.2-5 show the response of neutron flux, pressure, average coolant temperature, and DNBR to a rapid rod cluster control assembly withdrawal incident starting from full power. Reactor trip on high neutron flux occurs shortly after start of the accident. Since this is rapid with respect to the thermal time constants of the plant, small changes in T_{avg} and pressure result and a large margin to DNB is maintained.

The response of neutron flux, pressure, average coolant temperature, and DNBR for a slow control rod assembly withdrawal from full power is shown in Figures 15.2-6 and 15.2-7. Reactor trip on overtemperature ΔT occurs after a longer period and the rise in temperature and pressure is consequently larger than for rapid rod cluster control assembly withdrawal.

Figure 15.2-8 shows the minimum DNBR as a function of reactivity insertion rate from initial full power operation for the minimum and maximum reactivity feedback. It can be seen that two reactor trip channels provide protection over the whole range of reactivity insertion rates. These are the high neutron flux and overtemperature ΔT trip channels. The minimum DNBR is never less than 1.30.

Figures 15.2-9 and 15.2-10 show the minimum DNBR as a function of reactivity insertion rate for rod cluster control assembly withdrawal incidents starting at 60 and 10 percent power respectively. The results are similar to the 100 percent power case, except as the initial power is decreased, the range over which the overtemperature ΔT trip is effective is increased. In neither case does the DNBR fall below 1.30.

Conclusions

The high neutron flux and overtemperature ΔT trip channels provide adequate protection over the entire range of possible reactivity insertion rates, i.e., the minimum value of DNBR is always larger than 1.30.

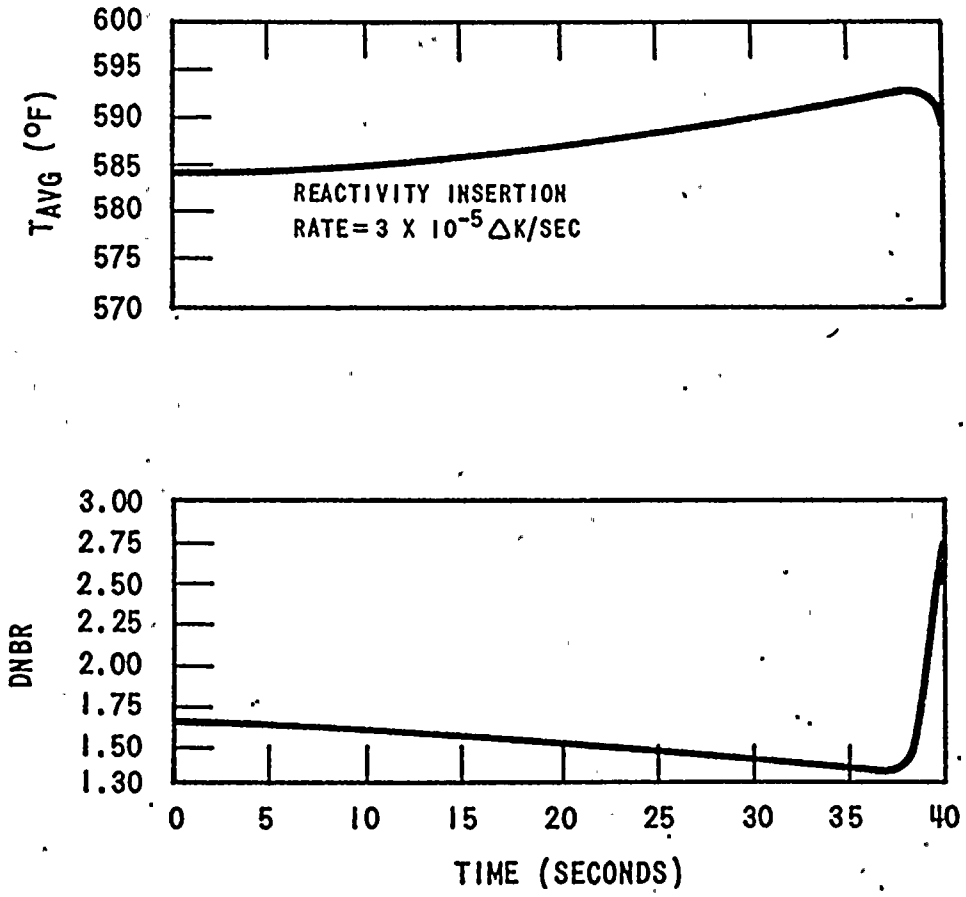

Figure 15.2-7 Transient Response for Uncontrolled Rod Withdrawal from Full Power Terminated by Overtemperature ΔT Trip

Appendix C

Diablo Canyon Final Safety Analysis Report

Section 15.2.8

Loss of Normal Feedwater

15.2.8 LOSS OF NORMAL FEEDWATER

Identification of Causes and Accident Description

A loss of normal feedwater (from pump failures, valve malfunctions, or loss of offsite AC power) results in a reduction in capability of the secondary system to remove the heat generated in the reactor core. If the reactor were not tripped during this accident, core damage would possibly occur from a sudden loss of heat sink. If an alternative supply of feedwater were not supplied to the plant, residual heat following reactor trip would heat the primary system water to the point where water relief from the pressurizer occurs. Significant loss of water from the Reactor Coolant System could conceivably lead to core damage. Since the plant is tripped well before the steam generator heat transfer capability is reduced, the primary system variables never approach a DNB condition.

The following provides the necessary protection against a loss of normal feedwater:

1. Reactor trip on low-low water level in any steam generator.

2. Reactor trip on low feedwater flow signal in any steam generator. (This signal is actually a steam flow-feedwater flow mismatch in coincidence with low water level)

3. Two motor driven auxiliary feedwater pumps which are started on:

   a. Low-low level in any steam generator
   b. Trip of all main feedwater pumps
   c. Any safety injection signal
   d. Loss of offsite power
   e. Manual actuation

4. One turbine driven auxiliary feedwater pump which is started on:

   a. Low-low level in any two steam generators, or
   b. Undervoltage on any two reactor coolant pump buses.
   c. Manual actuation

The motor driven auxiliary feedwater pumps are supplied by the diesels if a loss of offsite power occurs and the turbine-driven pump utilizes steam from the secondary system. Both type pumps are designed to start within one minute even if a loss of all AC power occurs simultaneously with loss of normal feedwater. The turbine exhausts the secondary steam to the atmosphere. The auxiliary pumps take suction from the condensate storage tank for delivery to the steam generators.

The analysis shows that following a loss of normal feedwater, the auxiliary feedwater system is capable of removing the stored and residual heat thus preventing either over-pressurization of the Reactor Coolant System or loss of water from the reactor core.

Analysis of Effects and Consequences

A detailed analysis using the BLKØUT[7] Code is performed in order to obtain the plant transient following a loss of normal feedwater. The simulation describes the plant thermal kinetics, Reactor Coolant System including the natural circulation, pressurizer, steam generators and feedwater system. The digital program computes pertinent variables including the steam generator level, pressurizer water level, and reactor coolant average temperature.

Major assumptions are:

1. The initial steam generator water level (in all steam generators) at the time of reactor trip is at a conservatively low level, i.e., the lower narrow range level tap.

2. The plant is initially operating at 102 percent of the engineered safeguards design rating.

3. A conservative core residual heat generation based upon long term operation at the initial power level preceding the trip.

4. A heat transfer coefficient in the steam generator associated with Reactor Coolant System natural circulation.

5. Only one motor driven auxiliary feedwater pump is available one minute after the accident.

6. Auxiliary feedwater is delivered in two steam generators.

7. Secondary system steam relief is achieved through the self-actuated safety valves. Note that steam relief will, in fact, be through the power operated relief valves or condenser dump valves for most cases of loss of normal feedwater. However, for the sake of analysis these have been assumed unavailable.

8. The initial reactor coolant average temperature is $4^{\circ}F$ lower than the nominal value since this results in a greater expansion of Reactor Coolant System water during the transient and, thus, in a higher water level in the pressurizer.

Results

13 Figure 15.2-28 shows plant parameters following a loss of normal feedwater. Figure 15.2-28A shows the pressurizer pressure as a function of time. In the short term the transient following a loss of normal feedwater is essentially identical to the complete loss of reactor coolant flow transient discussed in Subsection 15.3.4. The DNB analysis presented in that subsection is therefore appropriate to the loss of normal feedwater transient.

Following the reactor and turbine trip from full load, the water level in the steam generators will fall due to the reduction of steam generator void fraction and because steam flow through the safety valves continues to dissipate the stored and generated heat. One minute following the initiation of the low-low level trip, the auxiliary feedwater pump is automatically started, reducing the rate of water level decrease.

The capacity of the auxiliary feedwater pump is such that the water level in the steam generator being fed does not recede below the lowest level at which sufficient heat transfer area is available to dissipate core residual heat without water relief from the Reactor Coolant System relief or safety valves.

From Figure 15.2-28 it can be seen that at no time is the tube sheet uncovered in the steam generators receiving auxiliary feedwater flow and that at no time is there water relief from the pressurizer. If the auxiliary feed delivered is greater than that of one motor driven pump, the initial reactor power is less than 102 percent of the engineered safeguards design rating, or the steam generator water level in one or more steam generators is above the low-low level trip point at the time of trip then the result will be a steam generator minimum water level higher than shown and an increased margin to the point at which reactor coolant water relief occurs.

Conclusions

Results of the analysis show that a loss of normal feedwater does not adversely affect the core, the Reactor Coolant System, or the steam system since the auxiliary feedwater capacity is such that the reactor coolant water is not relieved from the pressurizer relief or safety valves, and the water level in the steam generators receiving feedwater is maintained above the tube sheets.