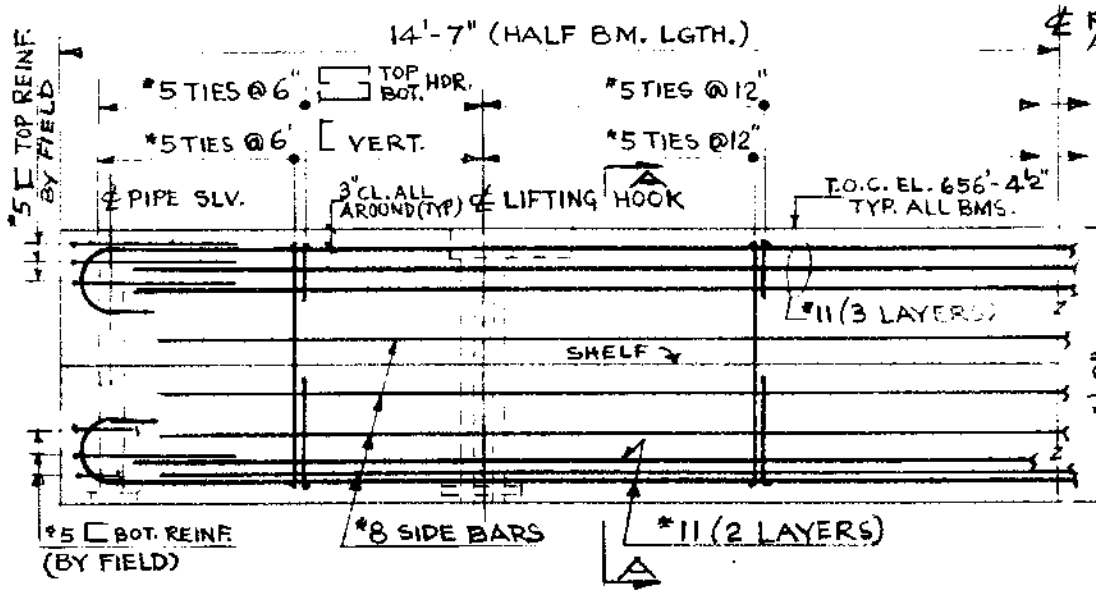

MISSILE SHIELD COVER - REINF.
BEAMS: *2 & *3.

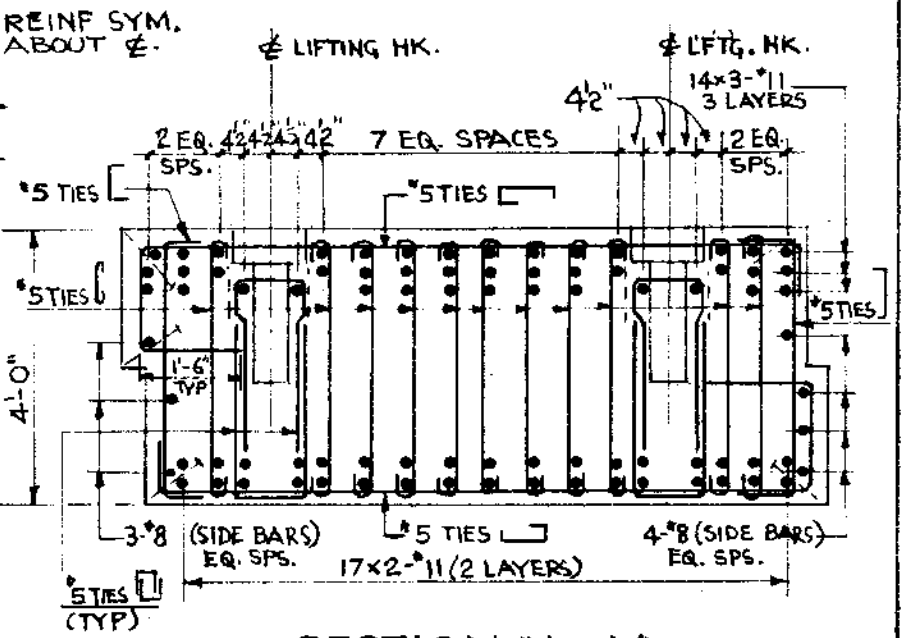

SECTION "A-A"

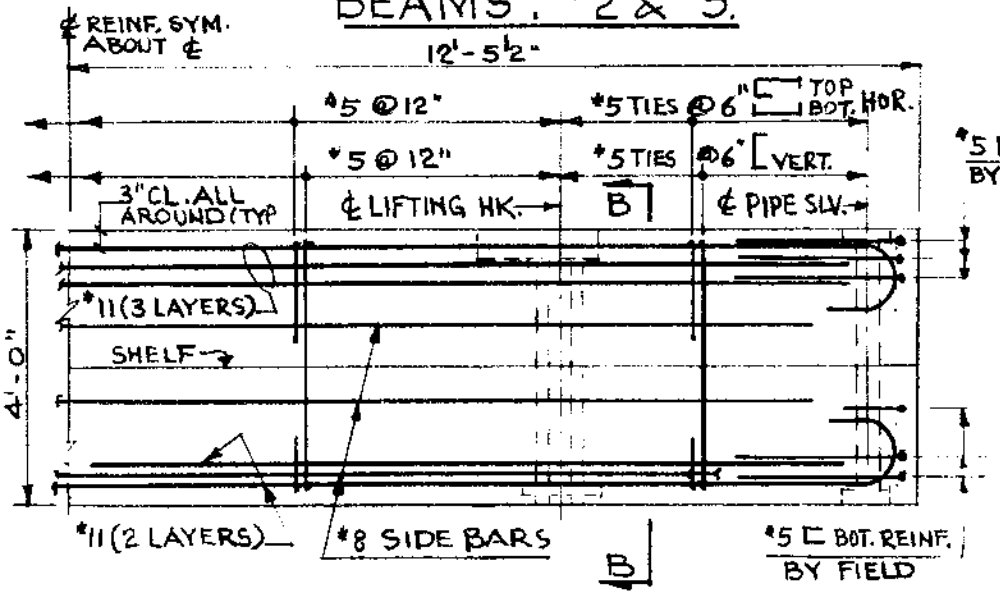

MISSILE SHIELD COVER - REINF.
BEAM: *1
BEAM *4 SIMILAR.

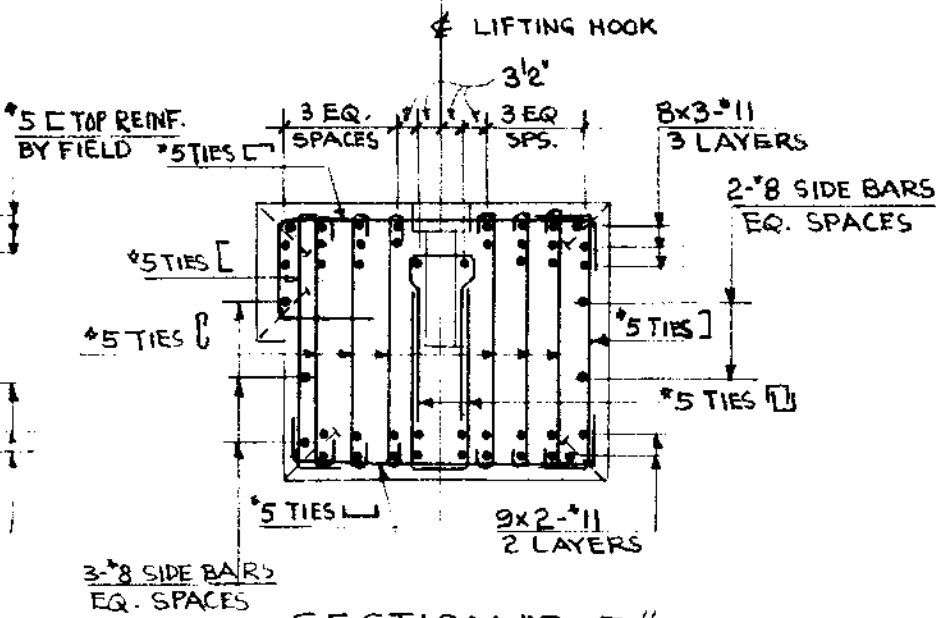

SECTION "B-B"

Fig. 5.2.2-51D

July 1982 BY F. CLARKE