Robert L. Cloud and Associates, Inc.

RLCA

Interim Technical Report

DIABLO CANYON UNIT 1
INDEPENDENT DESIGN VERIFICATION PROGRAM
-HVAC COMPONENTS-
ITR #31 REVISION 1

Docket No. 50-275
License No. DPR-76

8/4/83
Project Reviewer/Date
Technical Review

Edward Denison 8/4/83
Project Manager/Date
Approved P 105-4-839-031

PROGRAM MANAGER'S PREFACE

DIABLO CANYON NUCLEAR POWER PLANT - UNIT I

INDEPENDENT DESIGN VERIFICATION PROGRAM

INTERIM TECHNICAL REPORT

HVAC COMPONENTS

This is revision 1 to the thirty-first of a series of Interim Technical Reports prepared by the DCNPP-IDVP for the purpose of providing a conclusion of the program.

This report provides the analytical results, concerns, recommendations, and conclusions of the IDVP with respect to the initial and additional samples for HVAC components. All EOI files initiated for the HVAC components have been closed or identified as an error.

As IDVP Program Manager, Teledyne Engineering Services has approved this revision 1 to ITR-31, including the conclusions and recommendations presented. The methodology followed by TES in performing this review and evaluation is described in Appendix D to this report.

ITR Reviewed and Approved
IDVP Program Manager
Teledyne Engineering Services

D.C. Stratouly

D. C. Stratouly
Assistant Project Manager

HVAC Components - Revision 1

Contents

List of Tables

List of Figures

1.0 INTRODUCTION

Purpose and Scope

This interim technical report (ITR) summarizes the independent analysis and verification of the initial sample of heating, ventilating and air conditioning (HVAC) components at Diablo Canyon Nuclear Power Plant Unit I (DCNPP-1). The initial sample of HVAC components consists of volume damper 7A and supply fan S-31. Volume damper 7A is located at elevation 154 feet in the auxiliary building. Supply fan S-31 is located at elevation 140 feet in the auxiliary building east of the control room.

This ITR also summarizes the IDVP additional verification performed to address the generic concerns noted in the initial sample. This additional verification was performed to determine if the generic concerns from the initial sample extend to other HVAC components.

This report is one of several interim technical reports of the Independent Design Verification Program (IDVP). Interim technical reports include references, sample definitions and descriptions, methodology, a listing of Error and Open Items, an examination of trends and concerns, and a conclusion (Reference 1). This report will be referenced in the DCP Phase I Final Report and serves as a vehicle for NRC review.

Summary

Robert L. Cloud and Associates (RLCA) performed verification analyses for an initial sample of HVAC components. Field verified information was used for the verification analyses. Stresses were calculated and compared to the allowables. The results of this verification effort showed both volume damper 7A and supply fan S-31 to be adequate to withstand the effects of the postulated Hosgri earthquake. However, generic concerns stemming from the design analysis have been noted. As a result, additional samples of HVAC components were reviewed for additional verification.

The IDVP determined on the basis of this additional verification that HVAC components meet the licensing criteria.

Background

On September 28, 1981 PGandE reported that a diagram error had been found in a portion of the seismic qualification of the Diablo Canyon Nuclear Power Plant Unit I (DCNPP-1). This error resulted in an incorrect application of the seismic floor response spectra for sections of the annulus of the Unit I containment building. The error originated when PGandE transmitted a sketch of Unit 2 to a seismic service-related contractor. This sketch contained geometry incorrectly identified as Unit 1 geometry.

As a result of this error, a seismic reverification program was established to determine if the seismic qualification of the plant was adequate for the postulated 7.5M Hosgri earthquake. This program was presented orally to the NRC in a meeting in Bethesda, Maryland on October 9, 1981.

Robert L. Cloud and Associates (RLCA) presented a preliminary report on the seismic reverification program to the NRC on November 12, 1981 (Reference 2). This report dealt with an examination of the interface between URS/Blume and PGandE.

The NRC commissioners met during the week of November 16, 1981 to review the preliminary report and the overall situation. On November 19, 1981 an order suspending license CLI-81-30 was issued which suspended PGandE's license to load fuel and conduct low power tests up to 5% of rated power at DCNPP-1. This suspending order also specified that an independent design verification program be conducted to ensure that the plant met the licensing criteria.

PGandE retained Robert L. Cloud and Associates as program manager to develop and implement a program that would address the concerns cited in the order suspending license CLI-81-30. The Phase I plan for this program was transmitted to the NRC on December 4, 1981 and discussed with the NRC staff on February 3, 1982. Phase I deals with PGandE internal activities and seismic service-related contractors prior to June 1978.

On March 19, 1982 the NRC approved Teledyne Engineering Services (TES) as program manager to replace Robert L. Cloud and Associates (RLCA). However, RLCA continued to perform the independent review of seismic, structural and mechanical aspects of Phase I.

The NRC approved the Independent Design Verification Program Phase I Engineering Plan on April 27, 1982. This plan dictates that a sample of piping, equipment, structures and components be selected for independent analysis. The results of these analyses are to be compared to the design analysis results. If the acceptance criteria are exceeded, an Open Item Report is to be filed. Interim technical reports are to be issued to explain the progress of different segments of the technical work.

ITR #31, Revision 0 was issued on January 14, 1983, and describes the independent analysis and verification of the initial sample of HVAC components. Recommendations and concerns were noted which are addressed in Revision 1.

2.0 INDEPENDENT DESIGN VERIFICATION METHODS

2.1 PROCEDURES

The IDVP used the following procedures for the independent design verification analyses of the initial sample of HVAC components.

First, the physical dimensions and configuration of the HVAC components were field verified. Next, the HVAC components were mathematically modeled to simulate the mass and stiffness characteristics. From these models, the natural frequencies were determined.

Seismic accelerations were computed using these natural frequencies together with Hosgri response spectra selected from the figures listed in Appendix A. Forces and moments were then calculated for the key areas. Stresses were determined from the forces and moments and compared to the allowable stresses. Finally, IDVP and design analyses were compared.

2.2 LICENSING CRITERIA

The IDVP reviewed the DCNPP-1 licensing documents to determine the licensing criteria for HVAC Components (References 3 & 4). Specific structural criteria, however, were not addressed in the licensing documents.

Loading combinations were taken from Chapter 5 of the Hosgri Report (Reference 3). Standard engineering approaches were employed by the IDVP to calculate loads and stresses. Allowables for volume damper 7A were determined using the ASME B and PV Code, Appendix XVII. Allowables for supply fan S-31 were determined using mechanical equipment criteria from the Hosgri Report, (Reference 3, Table 7-2) and material yield strength criteria from ASME B and PV code yield strengths for component supports. Use of yield strength criteria is based on Hosgri Report Section 9.4, which specifies that seismic resistance capabilities of equipment or components are determined assuming that the equipment or component is stressed to yield level. Allowables for the concrete expansion anchors were taken from the PGandE Engineering Standard for Concrete Expansion Anchors for Static and Seismic Loading, Drawing No. 054162, Revision 3.

3.0 VERIFICATION ANALYSIS OF HVAC COMPONENTS

3.1 VOLUME DAMPER 7A

Volume damper 7A is located in the Unit 1 auxiliary building, at elevation 154 feet. The damper is a 24 inch diameter circular blade type. The damper blade is operated by an electric motor actuator. Damper 7A is installed in a 24 inch diameter circular vertical duct in series with an identical volume damper 7. The damper is attached to the duct by bolted flange connections. This run of duct is attached to sheet metal plenums, which are supported from the ceiling and floor slab.

Figure 1 shows the general configuration of volume damper 7A.

3.1.1 Method of Verification Analysis

The IDVP developed a mathematical model after field verifying the dimensions and details of the damper, supports, and attached ducting. A computer model was developed using the STARDYNE computer code to mathematically model the mass and stiffness characteristics of the system (Reference 5).

Since damper 7A is attached to the duct along with damper 7, the IDVP dynamically analyzed the coupled system. Thus, the computer model of 7A also included the ducting and damper 7. Both dampers 7A and 7 have electric motor actuators, which were also included in the model. The mass of the actuators were lumped at their respective centers of gravity. For damper 7A, the supports for the actuator attached to the floor, and for damper 7 to the ceiling. These supports were also included in the model as shown in Figure 2.

Using this computer model, the IDVP determined that all the natural frequencies of the system were in the rigid range. From the Hosgri floor response spectra curves (see Appendix A) and the natural frequency results, the seismic accelerations were determined as follows:

1.81 g horizontal
0.80 g vertical

In this case, the damping value was irrelevant because the system natural frequencies were all in the rigid range.

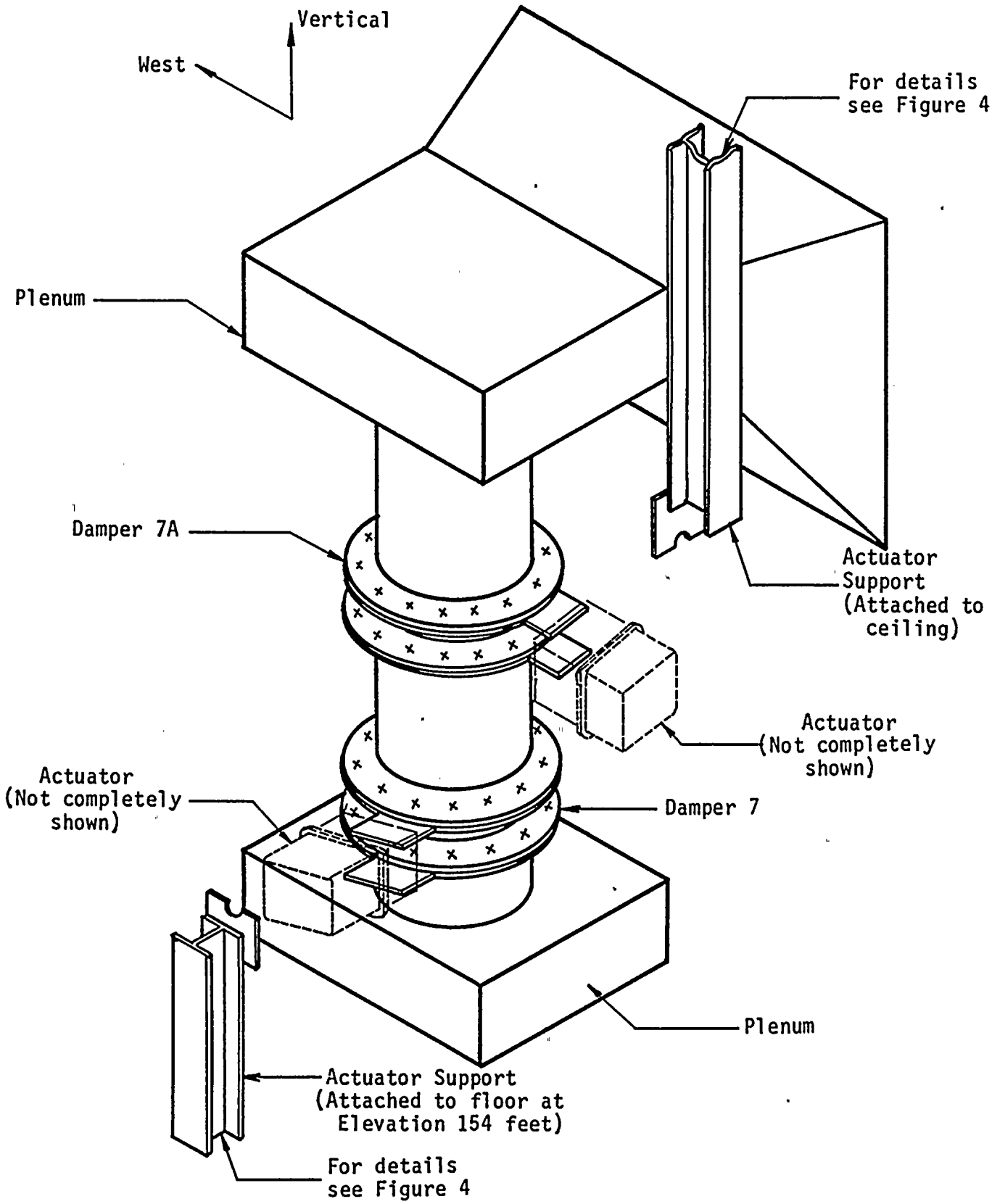

Figure 1

Volume Damper 7A
General Configuration

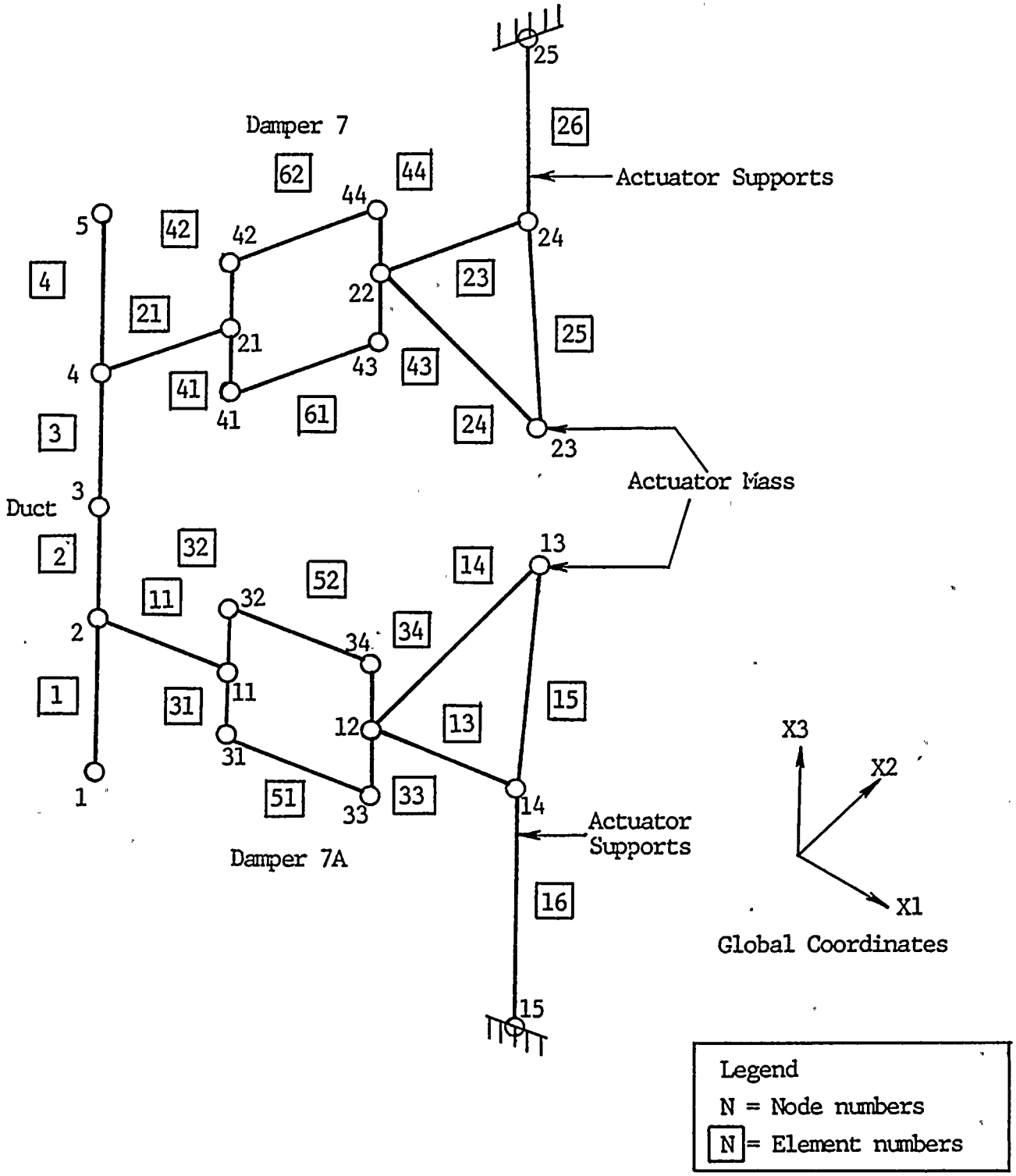

Figure 2

STARDYNE Model
Volume Damper 7A

The larger of the East-West and North-South seismic accelerations was used in the horizontal analysis.

An equivalent static method was used to determine the loads and forces at the key areas. This was done by applying the seismic accelerations to the computer model. A unit acceleration was applied in the vertical direction, and the vertical load case results were multiplied by 1.8 to account for both deadweight and seismic loads.

Loads and forces were then used to calculate stresses for key areas. Calculated stresses were compared to the allowable stresses as defined by the licensing criteria.

3.1.2 Results of Verification Analysis

The IDVP computed stresses at the following key areas and compared them to the allowable stresses.

Description*	Calculated Stress	Allowable Stress
Actuator mounting plates	6,009 psi	15,120 psi
Actuator mounting plate fillet weld	9,346 psi	14,400 psi
Actuator mounting plate square weld	7,636 psi	15,120 psi
Actuator support plate (Actuator to I-beam)	4,210 psi	15,120 psi
Support plate to I-beam bolts	0.22**	1.0**
I-beam baseplate anchor bolts	0.011**	1.0**

* See Figures 3 and 4 for the locations of key areas where stresses were calculated.

** Combined shear/tension interaction ratio

Table 1

Verification Analysis - Stress Results

Volume Damper 7A

The results show that all the stresses calculated by the IDVP are below the allowable stresses.

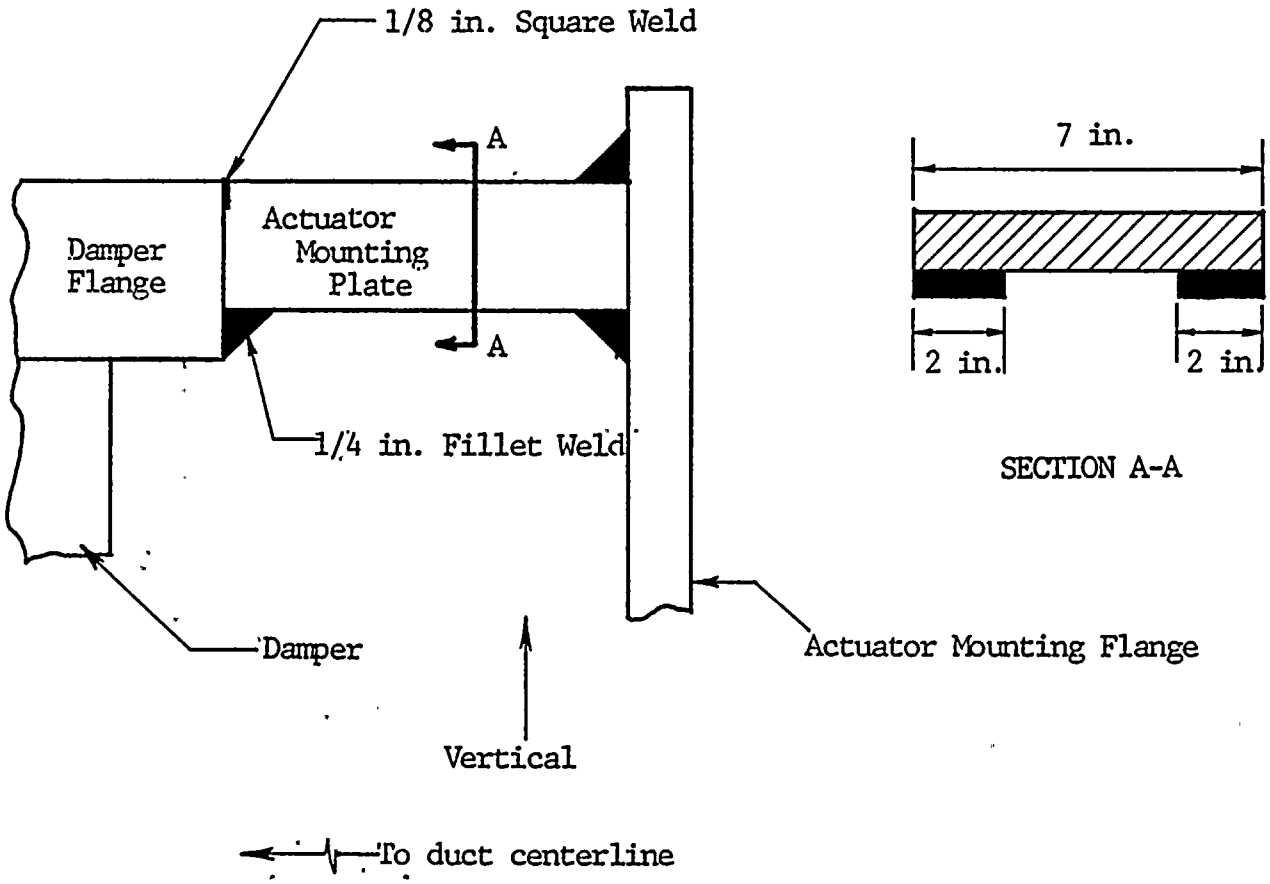

Figure 3

Volume Damper 7A
Actuator Mounting Plate Welds

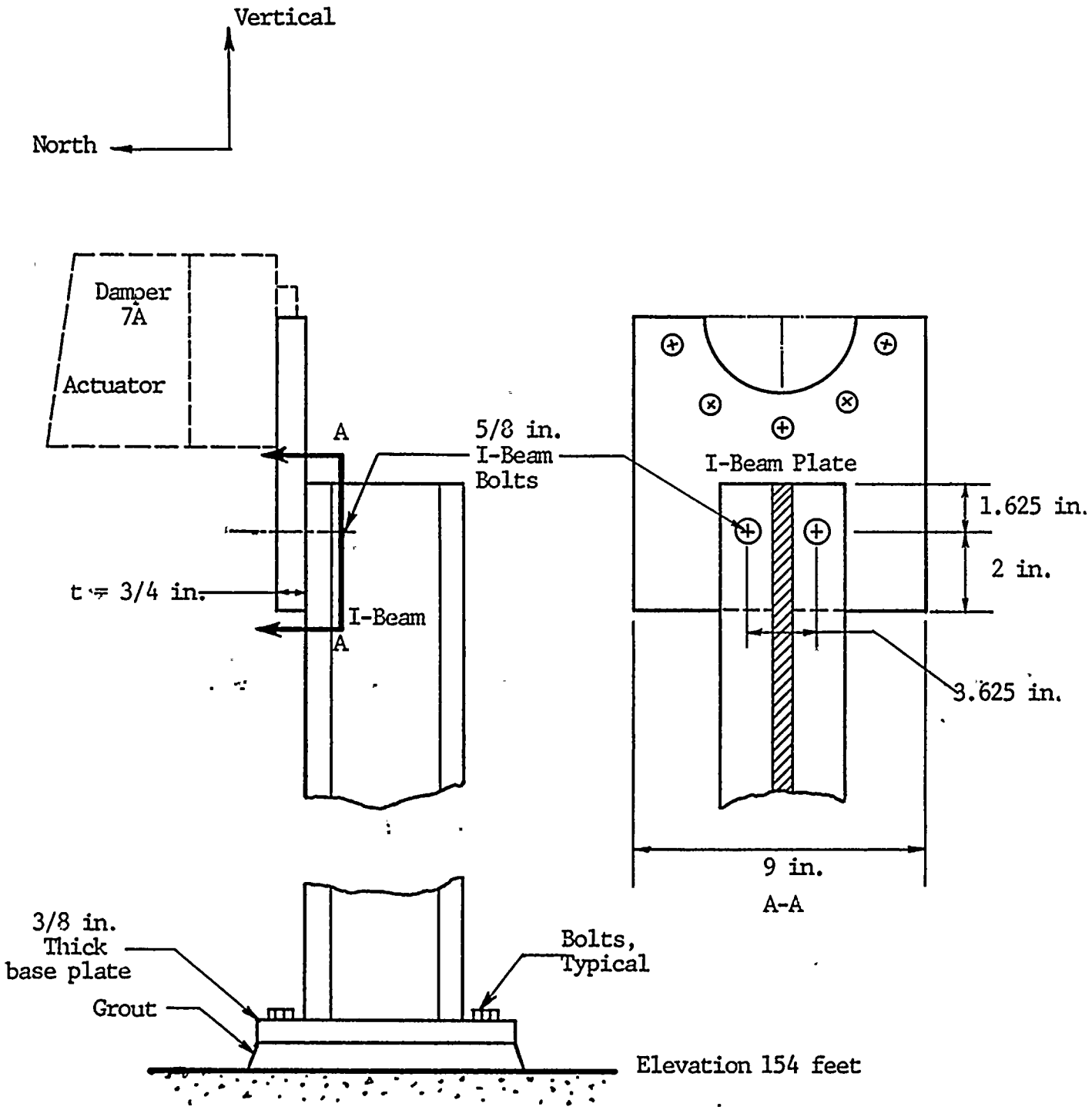

Figure 4

Volume Damper 7A
Actuator to Support I-Beam Plate and Bolts

3.1.3 Design Analysis Methods

Volume damper 7A itself was qualified by the manufacturer's consultant (Reference 6). This analysis qualifies the damper alone for a non-specific installation.

Seismic accelerations used in the manufacturer's analysis were higher than those used in the IDVP analysis and higher than those required for the Hosgri qualification. Each of the separate damper components was analyzed for the worst case orientation.

Subsequent analyses of the attached ducting, duct supports and the actuator support were performed by PGandE's seismic service-related contractor, EDS Nuclear. The ducting and duct supports analyses consider only the mass of the damper and the offset of the actuator mass from the centerline of the duct. The details of the damper configuration were not required for the type of analyses performed. The design analyses concluded that the actuator required separate supports be added (References 7 and 8).

The analyses for the damper actuator supports used the ducting loads as calculated from the duct analysis described above. The effect of the actuator eccentricity with respect to the damper was included in calculating the support loads. This analysis used an incorrect location for the actuator center of gravity (see Section 3.1.6, EOI 1102).

3.1.4 Comparison of Verification and Design Analyses

Except for the analysis of the damper actuator support, the design analysis considered configurations of the damper-ducting system which were substantially different from those modeled in the IDVP analysis. Both these analyses are described in Sections 3.1.1 and 3.1.3. The IDVP considers the methodology used in the design analyses to be acceptable because the coupled system is rigid and sufficient conservatism exists in the damper analysis (i.e., higher acceleration used, minimum factor of safety is 1.3).

Because of the significantly different modeling methods, however, the results of the verification and design analysis could not be directly compared (see Section 3.1.6, EOI 1102).

3.1.5 Error and Open Item Reports

RLCA issued two EOI reports for volume damper 7A. Appendix B shows the EOI number, revision, date and status.

EOI 1083 was issued because the as-built configuration of the damper did not match that shown on the manufacturer's drawing (Reference 9). The drawing showed a square weld and the initial field verification showed two fillet welds. The IDVP modeled the damper based on the initial field verification. The results showed that verification actuator bracket weld stress in the IDVP analysis exceeded the allowable.

When protruding gasket material was removed during a subsequent, more detailed, field verification, the square weld was verified. Using this information in the analysis, the weld was found to be adequate. Therefore, EOI 1083 was resolved as a closed item.

EOI 1102 was issued for the following reasons. First, the manufacturer's analysis of volume damper 7A specified an incorrect vertical acceleration (Reference 6). Second, the flange thickness field verified by the IDVP was different from that specified in the manufacturer drawing. Third, the qualification analyses of the damper, supports and attached ducting did not consider the damper in the as-installed configuration.

A detailed review of the manufacturer's analysis showed that the incorrect vertical acceleration was not actually used in the design analysis. Instead, a more conservative acceleration was used. For the flange, the discrepancy in thickness was determined to be insignificant for the damper analysis.

For the as-installed configuration of the damper, the IDVP determined after a detailed review of the existing analyses that this was significant only in the analysis of the actuator supports. The analysis of the damper actuator supports considered the actuator center of gravity as 7 inches below and 5 inches to the right of the actuator shaft centerline, whereas the manufacturer showed the center of gravity as 2.1 inches to the right and 8 inches above the shaft centerline (Reference 8).

In conclusion, the vertical acceleration difference and flange thickness difference were determined to be insignificant. On the basis of the center of gravity error for the actuator, EOI 1102 was resolved as a Class C error.

3.2 SUPPLY FAN S-31

Supply fan S-31 is located in the Unit 1 auxiliary building, at elevation 140 feet. The fan is an electric motor driven centrifugal fan. It draws air in through side inlets and expels air to the attached duct, which is attached to the fan by a flexible coupling. The fan is anchored to the floor slab.

The fan axial direction corresponds to the East-West direction. Steel channel supporting frame work is attached to the east and west sides of the fan at the air inlets. The structure supports the fan housing above the floor.

Figure 5 shows the general configuration of supply fan S-31.

3.2.1 Method of Verification Analysis

The IDVP developed a mathematical model after obtaining the dimensions and details of the fan and supporting structure from field measurements. A computer model was developed using the STARDYNE computer code to mathematically model the mass and stiffness characteristics of the system (Reference 10).

The model represented the supporting steel channels with beam elements. The mass of the fan shaft and rotating element were modeled using beam elements and a concentrated mass. The fan sheet metal housing was assumed to be rigid in the axial direction (East-West) relative to the support frames. The support frames on each end of the fan housing were connected by rigid elements. The stiffness contribution of the sheet metal to the support frames was neglected in the North-South direction.

Because the thrust bearings were assumed to resist axial load in one direction only, all the rotating element and shaft weight was assumed to act at the bearing support on one support frame in the East-West direction. The bearing support blocks were modeled as rigid elements.

Figure 6 shows the general configuration of the computer model of the whole fan.

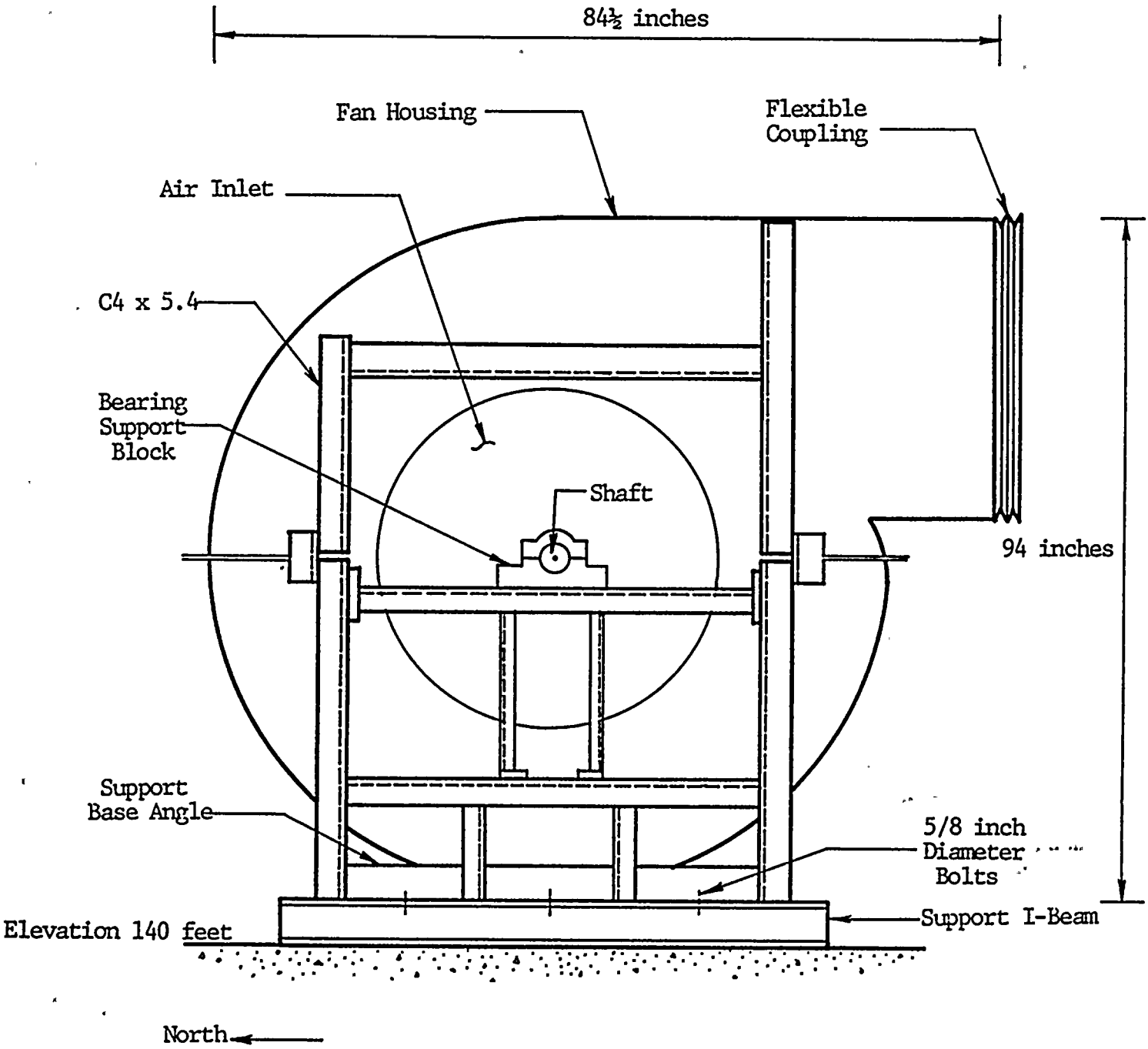

Figure 5

General Configuration of Supply Fan S-31

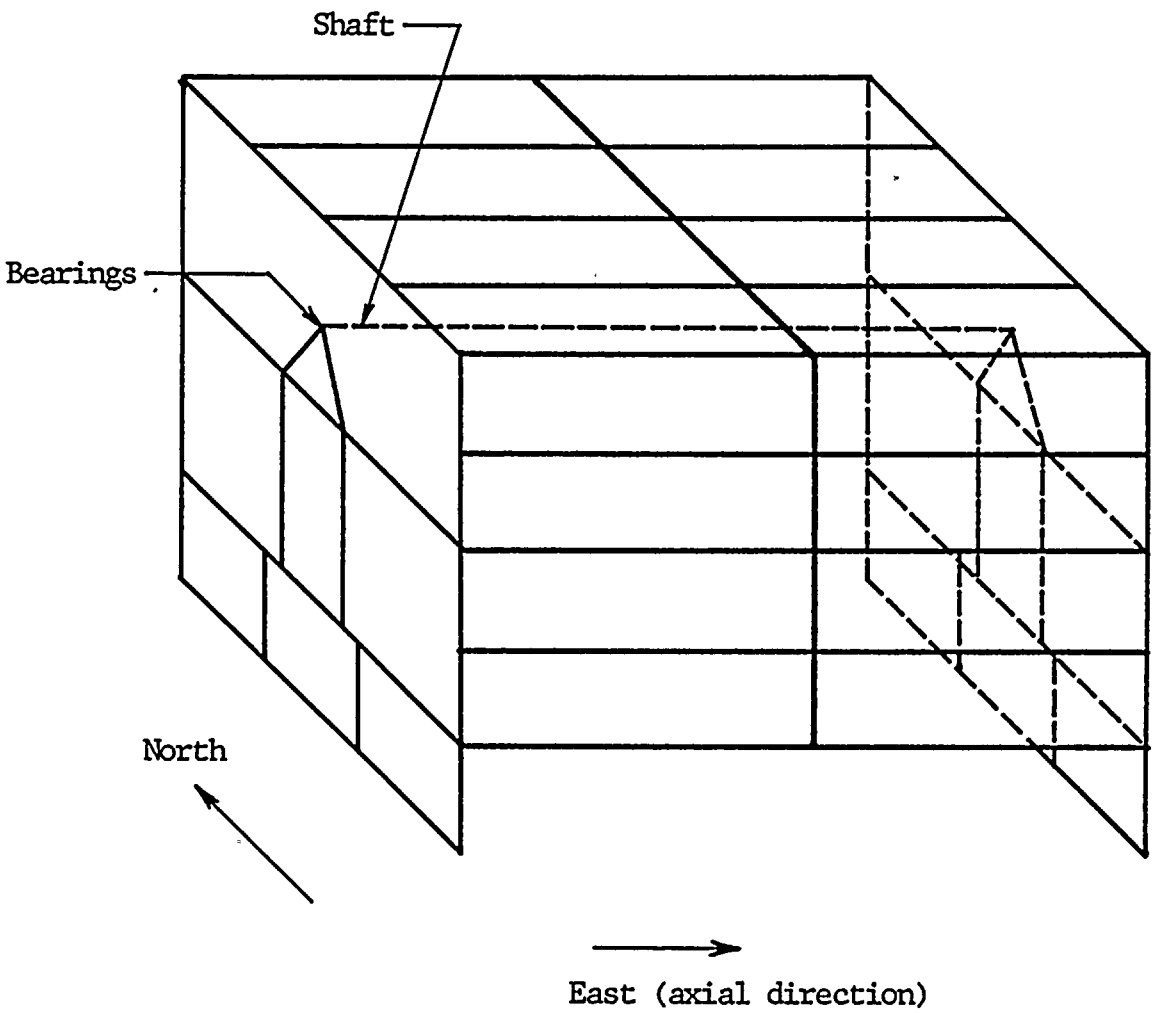

Figure 6

STARDYNE Model - Supply Fan S-31

Using this computer model, the IDVP determined that the fan had several natural frequencies below the 33 hertz rigid criteria cutoff. As a result, a response spectra analysis was performed. The response spectra considered in the analysis are listed in Appendix A. Acceleration values at 4% of critical damping were used.

Seismic loads at key areas were determined from the computer model using a response spectra modal superposition technique. These loads were computed for combinations of North-South and vertical seismic motion as well as East-West and vertical seismic motion. Deadweight loads were computed separately and then combined.

These loads were used to calculate stresses at the key areas.

The IDVP refined this analysis to include the stiffness contribution of the sheet metal to the support frames. Portions of the sheet metal were included in the computer model to represent the support frames. One part of the computer model representing the frame is shown in Figure 7.

This refined model more accurately distributed the fan mass. In addition, the support condition of the base angle in the deadweight model was more accurately represented.

Natural frequencies were computed from this revised model and a response spectra analysis was performed. Loads and stresses were calculated for key areas and compared to the allowable stresses. The results of this analysis are reported in Section 3.2.2.

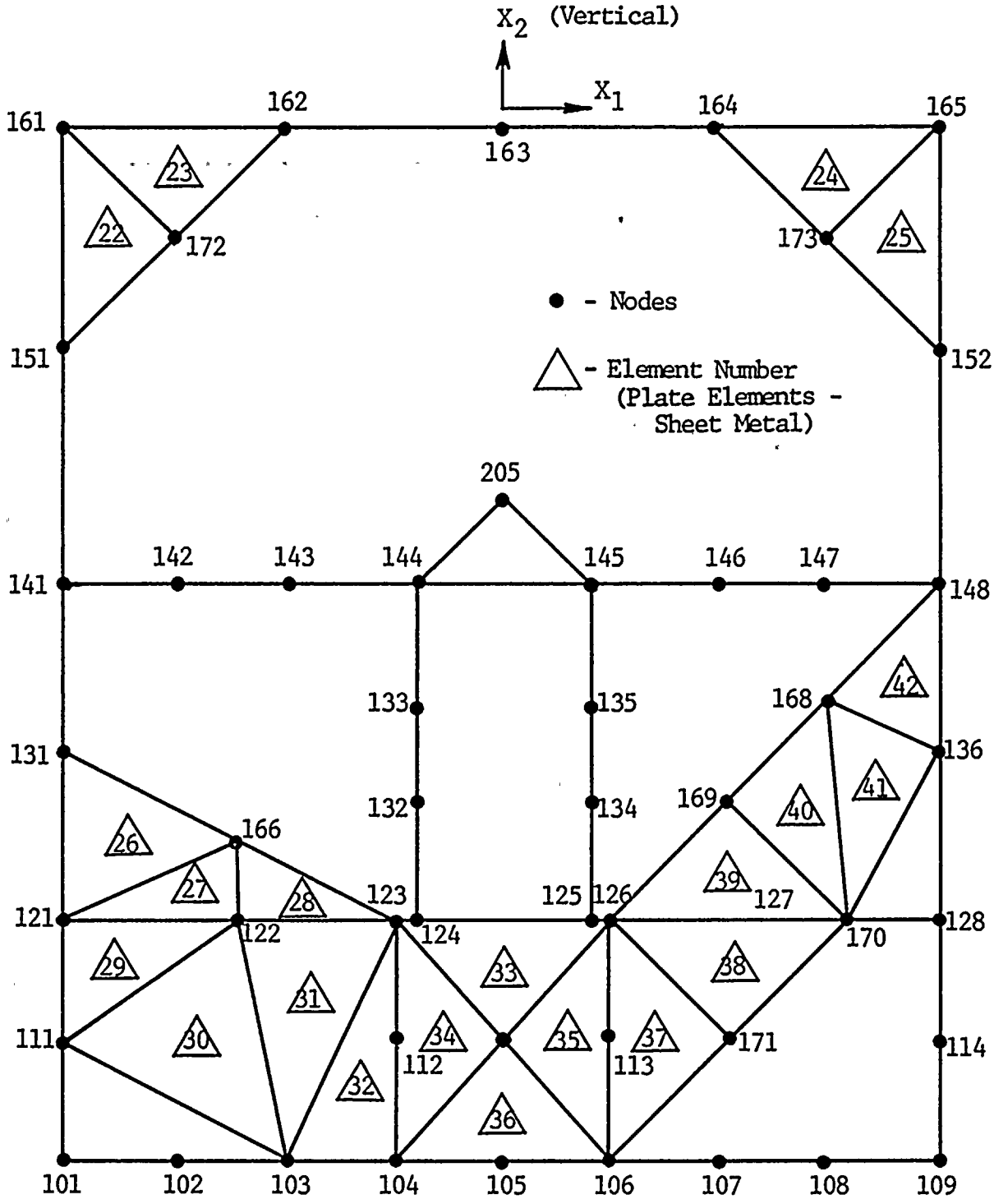

Figure 7

STARDYNE Model of One Support Frame with Sheet Metal

3.2.2 Results of Verification Analysis

The IDVP computed stresses at the following key areas of the fan and compared them to the allowable stresses.

Description	Calculated Stress	Allowable Stress
Shaft stress	11,095 psi	36,000 psi
Frame stress	26,885 psi	36,000 psi
Channel bearing stress	34,815 psi	87,000 psi
Maximum bolt stress Channel attachment bolt tensile	11,957 psi	36,000 psi
Base angle to I-beam bolt - combined interaction	0.507*	1.0*
Maximum weld shear stress	10,399 psi	22,300 psi
Concrete expansion anchor - combined interaction	0.92*	1.0*

* Combined shear/tension interaction ratio

Table 2

Verification Analysis - Stress Results

Supply Fan S-31

The results show that all stresses are below the allowable stresses.

3.2.3 Design Analysis Methods

The design analysis used a simplified finite element model representing the support frame with beam elements (Reference 11). The stiffness of the sheet metal in North-South directions was added to the support frame elements in the form of beam elements positioned diagonally to tie together the corners of the frame at the sheet metal attachment points.

Boundary conditions used in the design analysis imposed restraints on the motion of the fan; only the first mode shape and frequency were accurately calculated. Intermediate points of the support frame were restrained from motion in the North-South and East-West directions. The first mode shape calculated was bending deflection of the bearing block support channel in the East-West direction.

The design analysis considered the mass of the shaft and rotating element to be equally distributed between the two bearings in both the radial and axial directions.

A response spectra analysis was performed to determine the loads at key locations. These response spectra analysis results were then used to calculate the stresses.

3.2.4 Comparison of Verification and Design Analyses

The design analysis calculated the first natural frequency to be 18.8 hertz, assuming that the two bearings share the axial shaft load. The IDVP analysis calculated the first natural frequency to be 16.1 hertz with the same first mode shape, assuming one thrust bearing to resist all axial loads.

The design analysis boundary conditions unrealistically restrained lateral motion of the fan and supports model so that the second natural frequency was calculated to be 33.0 hertz. The IDVP analysis determined that intermediate system natural frequencies existed at 24.6, 29.5, and 29.7 hertz. Substantial modal weight participation occurred for the modes at natural frequencies of 24.6 and 29.5 hertz.

The design analysis considered an incorrect moment arm of 2.08 inches in the calculation of the base angle bending moment (Reference 11). Dimensions from the design analysis computer model indicate that the correct dimension is 5.833 inches. IDVP recalculation of the bending stress using the design analysis values, but with the correct moment arm length, show the stress to exceed allowable. However, the IDVP analysis, which considered the sheet metal stiffness, found the stress at this location to be below allowable.

For the base angle to I-beam bolt, the design analysis used a bolt size of 7/8 inches. From field verified information, the verification analysis used a bolt size of 5/8 inches. The IDVP determined that the design analysis bolt size was incorrect. The verification analysis showed, however, that stresses for this bolt were below allowable.

3.2.5 Error and Open Item Reports

The IDVP issued three EOI reports for supply fan S-31. Appendix B shows the EOI number, revision, date and status.

EOI 1018 was issued because the vendor drawings for fan S-31 showed that the support channels were 2-1/2 inch channels (Reference 12), while both the vendor and design calculations show the channels to be 4 inches (Reference 11). IDVP field verification showed these channels to be 4 inches also. The information on the vendor drawing was subsequently revised. EOI 1018 was therefore classified as a deviation.

EOI 1061 was issued because a detailed drawing for the fan could not be supplied to the IDVP. Further information was obtained through subsequent IDVP field verifications. EOI 1061 was resolved as a closed item.

EOI 1096 was initially issued to report a potential overstress in supply fan S-31. However, when the IDVP performed a more refined analysis, all stresses were found to be below allowable (see Section 3.2.1). Subsequent comparison between the verification and design analyses identified three discrepancies in the design analysis. First, the design analysis used a bolt size of 7/8 inches for the base angle to I-beam bolt. No design documentation exists that specifies the correct bolt size. Using the field verified information, the IDVP determined that the installed bolt size was 5/8 inches.

Second, the design analysis boundary conditions for the dynamic model and the thrust bearing modeling were incorrect, as discussed in Section 3.2.4.

Third, the design analysis used a moment arm length of 2.08 inches in the bending stress calculation for the base angle. The design analysis computer model gives this length as 5.833 inches. The IDVP verified the 5.833 inch length as correct.

EOI 1096 was classified as a Class C error.

4.0 EVALUATION OF INITIAL SAMPLE OF HVAC COMPONENTS

4.1 INTERPRETATION

The IDVP performed analyses on an initial sample of two Design Class I HVAC components. The IDVP results were compared to the allowables. In addition, the IDVP and design analysis methods were compared.

For volume damper 7A, all stresses were below the allowables. The only concern involved an incorrectly noted center of gravity in the actuator support calculation.

For supply fan S-31, all stresses were below the allowables. Three concerns have been noted. The first concern is the incorrect bolt size used in the design analysis; the second, an incorrect moment arm used in the design analysis; and the third, a design model that did not use representative boundary conditions and thrust bearing loading.

The IDVP interpretation of these concerns is as follows. The incorrect center of gravity in the volume damper 7A design calculation is not a generic concern. Likewise, the incorrectly derived moment arm in the supply fan S-31 design calculation is not a generic concern. However, design boundary conditions, the thrust bearing assumption, and an incorrect bolt size for supply fan S-31 are considered by the IDVP to be generic concerns even though no allowables were exceeded.

4.2 RECOMMENDATIONS

The following recommendations address the generic concerns for the initial sample of HVAC components:

- Review the modeling of a sample of two types of fans analyzed by this seismic service-related contractor for each of the generic concerns noted in Section 4.1. Each type of fan was qualified by a single design analysis, which covers identical fans at all installations. The review would involve verification of dimensions and configuration where documentation is inadequate, review of boundary conditions used in dynamic modeling and review of thrust bearing modeling assumptions.

- Perform verification reviews of a sample of one of each type of HVAC components analyzed by this seismic service-related contractor (for example: one condenser, one rough filter, one HEPA filter, one shutter damper, etc.). The purpose of this review is to determine if the generic concerns noted in Section 4.1 apply to HVAC components other than fans and volume dampers. The reviews would involve verification of dimensions and configuration where documentation is inadequate, review of boundary conditions used in dynamic modeling and review of the modeling of rotating HVAC machinery for adequacy of thrust-bearing modeling assumptions.

5.0 VERIFICATION OF ADDITIONAL HVAC COMPONENTS

5.1 ADDITIONAL SAMPLE NO. 1

The IDVP selected two HVAC components for additional verification in response to the recommendations described in Section 4.2.

5.1.1 Description of Sample and Review

Exhaust Fan E-101 and Condenser CR-35 were selected for the additional verification sample. Fan E-101 is a 24 inch axial flow fan (rated at 5700 cfm) located in the auxiliary saltwater pump compartment of the intake structure at elevation 14 feet 7 inches. Its support legs are bolted to the wall with four bolts.

Condenser CR-35 is a steel sheet metal, box shaped unit housing condenser coils and a fan. It is mounted on the floor slab at elevation 154 feet 6 inches in the auxiliary building. CR-35 has bolted base connections at six places to support members.

These two components, both rotating machinery, were selected to enable examination of the concerns noted in Section 4.2.

The IDVP review of these two components consisted of a review of the DCP design analyses (References 19 and 20). Modeling assumptions and boundary conditions were examined and assessed. The actual configuration of the equipment, as determined from drawings and IDVP field verification, was compared with the mathematical modeling to assess model validity.

The IDVP also field verified dimensional details of this equipment. Dimensions on drawings and those used in the DCP analysis were field verified. Anchor and hold-down bolt sizes in particular were field verified.

5.1.2 Results from Review of Additional Sample No. 1

The IDVP review of the DCP design analyses for both E-101 and CR-35 found the modeling and boundary condition assumptions to be acceptable. Dimensions used in these analyses were correct with the exception of hold-down bolts on CR-35.

Field verification showed the hold-down bolts installed on CR-35 were of a different size than was used in the DCP design analysis. This is described in further detail in EOI 1120.

5.1.3 EOIs Issued

EOI 1120 was issued for the additional verification of HVAC components because the hold-down bolt size (3/4 inch diameter) used in the DCP analysis of condenser CR-35 was different from the actual installed bolt size (1/2 inch diameter), as determined by IDVP field verification. The bolt size used in the DCP design analysis was unconservative. Factoring the correct bolt size into the original design analysis results in bolt stresses that exceeded allowables.

The original design calculation, performed for the Hosgri evaluation, considered only four hold-down bolts, as in the original delivered configuration. The results of this original design analysis led to modification of the condenser configuration to use six hold-down bolts, the configuration field verified by the IDVP. Thus, the original design analysis was overly conservative for the as-built configuration because it considered four bolts instead of six.

The DCP revised the design calculation as a result of the field verification and considered the as-built bolt configuration and size. Consequently, the revised and more accurate calculation showed the bolt stresses to be below allowables. Thus, EOI 1120 was resolved as a Class C error.

5.2 ADDITIONAL SAMPLE NO. 2

As a result of the incorrect bolt size noted in EOI 1120, the DCP implemented a complete field walkdown program for bolt sizes of all HVAC equipment. Any differences that were found were resolved by the DCP, and design calculations incorporated revised field information.

5.2.1 Description of Sample and Review

Following completion of the DCP field walkdown program, the IDVP randomly selected an additional sample of HVAC components for verification of bolt sizes.

This IDVP additional verification was conducted by reviewing a summary list of bolt sizes considered in the DCP design analyses of the sample components following their field walkdown program. The IDVP then field verified the installed anchor and hold-down bolt sizes for the components, and compared them to the analysis. The eight components of this additional bolt sample are listed in Table 3.

5.2.2 Results of Additional Sample No. 2

Table 3 summarizes the numerical results of the bolt size comparison. The DCP analyses considered the correct bolt sizes for all components examined, with the exception of Filter Unit FU-39.

The analysis for FU-39 used a bolt size of 5/8 inch whereas the IDVP field verification determined the corresponding bolt was actually 1/2 inch. The DCP revised the design analysis to include the correct bolt size. This revised analysis showed the bolt stresses to remain below allowables.

Component	Bolt Diameter In DCP Analysis (inches)	IDVP Field Verified Bolt Diameter (inches)
Supply Fan S-1	5/8	5/8
Exhaust Fan E-4	5/8	5/8
HEPA Filter EFH-4	No Bolts Welds Only	No Bolts Welds Only
Filter Unit FU-39	5/8*	1/2*
Mode Damper 12	1/2	1/2
10-inch Quadrant Damper	5/16	5/16
Fire Damper FD-1	3/8 5/16	3/8 5/16
Fire Damper FD-24	1/4	1/4

*EOI 1121

Table 3
Summary of Results
Additional Sample No. 2

5.2.3 EOIs Issued

EOI 1121 was issued for a bolt size discrepancy in the design analysis of Filter Unit FU-39. The DCP design analysis considered an anchor bolt size of 5/8 inch in diameter whereas IDVP field verification showed this bolt to be 1/2 inch in diameter. The DCP subsequently revised the analysis to include the correct bolt size. Results of this revised analysis show that the bolt stresses calculated with the correct bolt size are below the allowables. EOI 1121 was resolved as a Class C Error.

6.0 EVALUATION OF HVAC COMPONENTS ADDITIONAL SAMPLE

The IDVP determined that the bolt size concerns are limited to HVAC equipment only. No generic implications exist that would apply to other safety-related equipment because the IDVP sample sizes in these other areas are sufficiently large, and they have not identified any similar concerns.

In addition, if there are any further instances of incorrect bolt size, the IDVP does not believe that this consideration will affect the compliance of HVAC components with licensing criteria, for the following two reasons. First, the DCP has inspected all anchor and hold-down bolt sizes on HVAC equipment; any differences will be within measurement tolerances. Second, all discrepancies identified by the IDVP were small and did not affect compliance with licensing criteria.

To verify these conclusions, the IDVP randomly selected an additional sample (No. 3) for field verification of bolt sizes and comparison with sizes used in the DCP design analyses.

Results of additional sample No. 3 (shown in Table 4) confirm the IDVP conclusions.

Component	Bolt Diameter In DCP Analysis (inches)	IDVP Field Verified Bolt Diameter (inches)
Mode Damper 4B	1/2	1/2
Mode Damper 9	1/2	1/2
Mode Damper 1A	1-3/4 5/8	1-3/4 5/8
28-inch Quadrant Damper	5/16	5/16
Back Draft Damper for Exhaust Fan E-4	5/16	5/16
Supply Fan S-40	1/2	1/2
Motorized Damper 8A	1-1/8	1-1/8
Forced Draft Shutter Damper	1/2	1/2

Table 4
Summary of Results
Additional Sample No. 3

7.0 CONCLUSION

The results of the independent analyses have shown that no allowables were exceeded in either of the two HVAC components in the initial sample. However, as a result of comparisons between the design and verification analyses, design errors were found and generic concerns were noted.

Additional samples of HVAC components were reviewed to resolve these generic concerns. The IDVP determined on the basis of this additional verification that HVAC components meet licensing criteria.

8.0 REFERENCES

Reference No.	Title	RLCA File No.
1	DCNPP Independent Design Verification Program, Phase I, Revision 1, July 6, 1982, Revision 0, March 29, 1982.	
2	Preliminary Report, Seismic Reverification Program, Robert L. Cloud Associates, November 12, 1981.	
3	Seismic Evaluation for Postulated 7.5M Hosgri Earthquake, USNRC Docket Nos. 50-275 and 50-323.	P105-4-200-001
4	Diablo Canyon Site Units 1 and 2 Final Safety Analysis Report," USAEC Docket Nos. 50-275 and 50-323.	P105-4-200-005
5	RLCA Analysis of Volume Damper 7A, Revision 2, 10/11/82.	P105-4-561-001
6	Pacific Air Products, Seismic Qualification Analysis Safety Related Dampers, Revision 3, PGandE Record Number DC-663278-514-2.	P105-4-420-011
7	EDS Nuclear, Mechanical Equipment Rooms HVAC Duct Support Loading, Calculation C018, Revision 3, 2/26/81.	P105-4-446-009
8	EDS Nuclear, Mechanical Equipment Rooms HVAC Duct Damper Operator Supports Design, Calculation MS30, Revision 1, 9/15/82.	P105-4-446-011
9	Pacific Air Products Drawing, Sheet No. 5984-3, PGandE Record No. DC-663278-489-3.	P105-4-456-182
10	RLCA Analysis of Supply Fan S-31, Revision 4, 1/11/83.	P105-4-561-006

Reference No.	Title	RLCA File No.
11	EDS Nuclear, Seismic Qualification for HVAC Equipment, Calculation No. 0170-011-100.2, Revision 1, 1/11/82.	P105-4-446-005
12	Buffalo Forge, F-2407, Sheets 1 and 2, PGandE Record No. DC-663399-3-2 p. 1.	P105-4-446-001
13	RLCA Field Verification Notes for Volume Damper 7A.	P105-4-591.5-041, -056, -060, -109, -111, -119
14	RLCA Field Verification Notes for Supply Fan S-31.	P105-4-591.5-058, -070,-091,-092, -155
15	PGandE Drawing, "Ventilation Plans and Sections Area H & K El. 115'-0"-140'-0"," 59363, Change 14.	P105-4-456-019
16	PGandE Drawing "Air Conditioning Plan Area H Elevation 154"-6"," 59353, Change 26.	P105-4-456-111
17	PGandE, "Specification for Furnishing and Installing of Design Class I Heating and Ventilation Systems for Unit 1 Diablo Canyon," Specification No. 8827.	P105-4-436-002
18	Independent Design Verification Program, Program Procedure, Preparation of Open Item Reports, Error Reports, Program Resolution Reports and IDVP Completion Reports, DCNPP-IDVP-PP-003, Revision 1, June 18, 1982.	
19	DCP Analysis, Exhaust Fan E-101, 102, 103, 104, HV-2.3, Revision 0, November 18, 1982.	P105-4-436-020
20	DCP Analysis, Condenser CR-35, CR-36, HV-4.1, Revision 0, February 25, 1983.	P105-4-436-026

Appendix A
Hosgri Response Spectra
Considered in Verification HVAC Analysis
(one page)

Appendix A

Hosgri Response Spectra Considered in the Verification HVAC Analysis

HVAC Volume Damper 7A

Horizontal: Figures* 4-111, 4-116, 4-120, 4-124, 4-129, 4-134, 4-138, 4-142

Vertical: Figure 4-147

HVAC Supply Fan S-31

Horizontal: Figures 4-112, 4-117, 4-121, 4-125, 4-130, 4-135, 4-139, 4-143

Vertical: Figure 4-148

* Figure numbers refer to those in the Hosgri Report (Reference 3).

Appendix B

EOI Status - HVAC Components

(three pages)

EOI Status - HVAC Components

Volume Damper 7A

EOI File No.	Subject	Rev.	Date	By	Type	Action Required	Physical Mod.
1083	As-installed versus specified dimensions, actuator orientation	0	4/22/82	RLCA	OIR	RLCA	
		1	5/10/82	RLCA	PER/A	TES	
		2	7/8/82	TES	OIR	RLCA	
		3	8/19/82	RLCA	PPRR/CI	TES	
		4	9/10/82	TES	PRR/CI	TES	
		5	9/10/82	TES	CR	None	No
1102	As-built versus as-analyzed configuration, vertical acceleration	0	8/19/82	RLCA	OIR	RLCA	
		1	8/19/82	RLCA	PER/C	TES	
		2	10/6/82	TES	OIR	RLCA	
		3	10/11/82	RLCA	PER/C	TES	
		4	11/4/82	TES	OIR	RLCA	
		5	11/10/82	RLCA	PER/C	TES	
		6	11/22/82	TES	ER/C	PGandE	

STATUS: Status is indicated by the type of classification of latest report received by PGandE:

OIR - Open Item Report
PPRR - Potential Program Resolution Report
PRR - Program Resolution Report
PER - Potential Error Report
OIP - Open Item with future action by PGandE
ER - Error Report
CR - Completion Report
CI - Closed Item
DEV - Deviation
A - Class A Error
B - Class B Error
C - Class C Error
D - Class D Error

PHYSICAL MOD: Physical modification required to resolve the issue. Blank entry indicates that modification has not been determined.

EOI Status - HVAC Components

Supply Fan S-31

EOI File No.	Subject	Rev.	Date	By	Type	Action Required	Physical Mod.
1018	2½ inch channel specified versus 4 inch channel in analysis	0	2/18/82	RLCA	OIR	RLCA	
		1	4/19/82	RLCA	PPRR/DEV	TES	
		2	5/11/82	TES	PRR/DEV	TES	
		3	7/13/82	TES	CR	None	No
1061	Detailed fabrication drawing unavailable	0	3/15/82	RLCA	OIR	RLCA	
		1	4/19/82	RLCA	PPRR/CI	TES	
		2	5/11/82	TES	PRR/CI	TES	
		3	5/11/82	TES	CR	None	No
1096	Design analysis/IDVP analysis differences	0	7/9/82	RLCA	OIR	RLCA	
		1	7/13/82	RLCA	PER/A	TES	
		2	10/6/82	TES	OIR	RLCA	
		3	12/21/82	RLCA	PER/A	TES	
		4	1/12/83	RLCA	PER/C	TES	
		5	1/13/83	TES	ER/C	PGandE	
		6	2/25/83	TES	CR	None	

STATUS: Status is indicated by the type of classification of latest report received by PGandE:

OIR - Open Item Report
PPRR - Potential Program Resolution Report
PRR - Program Resolution Report
PER - Potential Error Report
OIP - Open Item with future action by PGandE

ER - Error Report
CR - Completion Report
CI - Closed Item
DEV - Deviation

A - Class A Error
B - Class B Error
C - Class C Error
D - Class D Error

PHYSICAL MOD: Physical modification required to resolve the issue. Blank entry indicates that modification has not been determined.

EOI Status - HVAC Components

Additional Verification

EOI File No.	Subject	Rev.	Date	By	Type	Action Required	Physical Mod.
1120	Condenser CR-35 Bolt Size 3/4 inch versus 1/2 inch	0	3/22/83	RLCA	OIR	RLCA	
		1	3/22/83	RLCA	PER/B	TES	
		2	4/05/83	TES	ER/B	PGandE	
		3	4/20/83	TES	OIR	RLCA	
		4	4/29/83	RLCA	PER/C	TES	
		5	5/04/83	TES	ER/C	PGandE	None
		6	5/07/83	TES	CR	None	
1121	Filter Unit FU-39 Bolt Size, 5/8 inch versus 1/2 inch	0	5/06/83	RLCA	OIR	RLCA	
		1	6/07/83	RLCA	PER/C	TES	
		2	6/10/83	TES	ER/C	PGandE	None
		3	6/10/83	TES	CR	None	

STATUS: Status is indicated by the type of classification of latest report received by PGandE:

OIR - Open Item Report
PPRR - Potential Program Resolution Report
PRR - Program Resolution Report
PER - Potential Error Report
OIP - Open Item with future action by PGandE
ER - Error Report
CR - Completion Report
CI - Closed Item
DEV - Deviation
A - Class A Error
B - Class B Error
C - Class C Error
D - Class D Error

PHYSICAL MOD: Physical modification required to resolve the issue. Blank entry indicates that modification has not been determined.

RLCA

Appendix C
Key Word Definitions
(six pages)

APPENDIX C

KEY TERMS AND DEFINITIONS

(The definitions in this glossary establish the meanings of words in the context of their use in this document. These meanings in no way replace the specfic legal and licensing definitions.)

Closed Item

- A form of program resolution of an Open Item which indicates that the reported aspect is neither an Error nor a Deviation. No further IDVP action is required (from Reference 18).

Completion Report

- Used to indicate that the IDVP effort related to the Open Item identified by the File Number is complete. It references either a Program Resolution Report which recategorized the item as a Closed Item or a PGandE document which states that no physical modification is to be applied in the case of a Deviation or a Class C or Class D Error (from Reference 18).

DCNPP-1

- Diablo Canyon Nuclear Power Plant Unit 1.

Elements

- Mathematical computer representation of stiffness connections between node points (for example, a beam).

EOI

- Error and Open Item Report.

Error Report

- An Error is a form of program resolution of an Open Item indicating an incorrect result that has been verified as such. It may be due to a mathematical mistake, use of wrong analytical method, omission of data or use of inapplicable data.

  Each Error shall be classified as one of the following:

  o Class A: An Error is considered Class A if design criteria or operating limits of safety related equipment are exceeded and, as a result, physical modifications or changes in operating procedures are required. Any PGandE corrective action is subject to verification by the IDVP.

  o Class B: An Error is considered Class B if design criteria or operating limits of safety related equipment are exceeded, but are resolvable by means of more realistic calculations or retesting. Any PGandE corrective action is subject to verification by the IDVP.

  o Class C: An Error is considered Class C if incorrect engineering or installation of safety related equipment is found, but no design criteria or operating limits are exceeded. No physical modifications are required, but if any are applied they are subject to verification by the IDVP.

  o Class D: An Error is considered Class D if safety related equipment is not affected. No physical modifications are required, but if any are applied, they are subject to verification by the IDVP (From Reference 18).

FSAR

- PGandE's Final Safety Analysis Report (Reference 4).

Field Verification

- IDVP process of verifying actual configuration of equipment, buildings and components at the installation site against PGandE drawings.

Hosgri Criteria

- Licensing criteria referring specifically to the postulated 7.5M Hosgri earthquake.

Hosgri Report

- A report issued by PGandE that summarizes their evaluation of the DCNPP-1 for the postulated Hosgri 7.5M earthquake. Includes seismic licensing criteria (Reference 3).

Hosgri 7.5M Earthquake

- Maximum earthquake for which the plant is designed to remain functional. Same as Safe Shutdown Earthquake (SSE).

Interim Technical Report

- Interim technical reports are prepared when a program participant has completed an aspect of their assigned effort in order to provide the completed analysis and conclusion. These may be in support of an Error, Open Item or Program Resolution Report, in support of a portion of the work which verifies acceptability or in support of other IDVP action. Since such a report is a conclusion of the program, it is subject to the review and approval of the Program Manager. The approved report will be transmitted simultaneously to PGandE and to NRC (from Reference 18).

Internal Technical Program

- Combined Pacific Gas and Electric Company and Bechtel Power Corporation project formed for Diablo Canyon completion.

HVAC

- Refers to heating, ventilation, and air conditioning.

Licensing Criteria

- Contained in PGandE licensing documents, includes allowable criteria (see Hosgri Report.)

NRC

- Nuclear Regulatory Commission

NRC Order Suspending License CLI-81-30

- The order dated November 19, 1981 that suspended the license to load fuel and operate DCNPP-1 at power levels up to 5% of full power and specified the programs that must be completed prior to lifting of the suspension.

Open Item

- An Open Item Report is issued for the purpose of reporting an IDVP response to a QA and Design Control deficiency, a violation of the verification criteria, or an apparent inconsistency in the performance of the work. The forms of program resolution of an Open Item are recategorization as an Error, Deviation, or a Closed Item. (From Reference 18).

PGandE

- Pacific Gas and Electric Company

Phase I Program

- Review performed by RLCA, RFR, and TES restricted to verifying work performed prior to June 1978 related to the Hosgri re-evaluation design activities of PGandE and their service-related contractors.

PGandE Design Class I

- PGandE engineering classification for structures, systems and components which corresponds to NRC Regulatory Guide 1.29 Seismic Category I classification.

Potential Program Resolution Report
and Potential Error Report

- Forms used for communication within IDVP (Reference 18).

Program Resolution Report

- Used to indicate that the specific item is no longer active in the IDVP. It indicates whether the resolution is a Closed Item, a Deviation, or that responsibility for an Open Item has been transferred to the PGandE Technical Program. Further IDVP action is required upon completion of the associated PGandE Technical Program Task if the IDVP transfers an Open Item to PGandE or if physical modifications are applied with respect to a deviation (Reference 18).

Response

- The motion resulting from an excitation of a device or system under specified conditions.

Response Spectra

- Graph showing relationship between acceleration and frequency. Used in seismic analysis.

Response Spectra Modal Superposition

- Dynamic analysis methodology whereby responses are calculated separately on a mode by mode basis and then combined.

RFR

- Roger F. Reedy, Inc.

RLCA

- Robert L. Cloud and Associates, Inc.

Sample

- Initial Sample stipulated in Phase I Program of equipment, components, and buildings to be design verified by independent analysis.

Sampling Approach

- Method used by the IDVP to determine the initial sample (buildings, piping, equipment and components) for analysis and to provide for sample expansion when required.

Spectral input

- Acceleration value taken from response spectra for input into seismic analysis.

SWEC

- Stone & Webster Engineering Corporation

TES

- Teledyne Engineering Services

Verification Program

- Undertaken by the IDVP to evaluate Diablo Canyon Nuclear Power Plant for compliance with the licensing criteria.

Appendix D
Program Manager's Assessment
(one page)

APPENDIX D

PROGRAM MANAGER'S ASSESSMENT

As IDVP Program Manager, TELEDYNE ENGINEERING SERVICES (TES) has established a Review and Evaluation Team, headed by a qualified team leader, as described in Section 7.4(c) of the Phase I Program Management Plan (Revision 1). The assigned team for the area, HVAC components, included in this Interim Technical Report, has reviewed the procedures, approach, field trip files, equipment design calculations (dated prior to November 1981) and independent verification calculations. The team leader has discussed these items with RLCA personnel as needed. In addition, the TES Team Leader has reviewed the Open Item Files pertaining to this area of responsibility and, in particular, those files for which RLCA has issued Potential Program Resolution Reports or Potential Error Reports, and on the basis of these evaluations, has recommended appropriate resolutions to the IDVP Program Manager.

Based on this review and evaluation process to date, the Team Leader, along with the TES Program Management Team, has studied and has concurred with the Interpretation and Recommendations outlined in Section 4.0 of this report.