PROGRESS REPORT
OF
SEISMIC SERVICE-RELATED CONTRACTS
PRIOR TO JUNE 1978
DIABLO CANYON NUCLEAR POWER PLANT

Project 105-4
Progress Report No. 7
Work Period from 1/21/82 to 2/12/82.

Report of work performed for
Pacific Gas and Electric company by
Robert L. Cloud Associates, Inc.

Robert L. Cloud Associates, Inc.

125 University Avenue
Berkeley, CA 94710
(415) 841-9296

Post Office Box 687
West Falmouth, MA 02574
(617) 540-5381

8202170181 820211
PDR ADOCK 05000275
R PDR

PROGRESS REPORT NO. 7
OF SEISMIC SERVICE-RELATED CONTRACTS
PRIOR TO JUNE 1978
DIABLO CANYON NUCLEAR POWER PLANT
Work Period from 1/21/82 to 2/12/82

TABLE OF CONTENTS

		Page
1.0	Work Accomplished	1
1.1	Task 1 - Review of Seismic Design Chain	1
1.2	Task 2 - Independent Requalification	1
1.2.1	Auxiliary Building	1
1.2.2	Piping Runs and Pipe Supports	1
1.2.3	Equipment	1
1.2.4	Conduit and HVAC Duct Supports	2
1.2.5	Small Bore Piping Runs and HVAC Components	2
1.3	Task 3 - Field Verification	2
1.4	Task 4 - PGandE and Its Contractors' QA/QC Procedures	2
1.5	Error and Open Item (EOI) Report	3
2.0	Significant Results and Findings	4
3.0	Scheduled Work for Next Work Period	5
3.1	Task 1 - Review of Seismic Design Chain	5
3.2	Task 2 - Independent Requalification	5
3.2.1	Auxiliary Building	5
3.2.2	Piping Rusna and Piping Supports	5
3.2.3	Equipment	5
3:2.4	Conduit and HVAC Duct Supports	5
3.2.5	Small Bore Piping Runs and HVAC Components	5

		Page
3.3	Task 3 - Field Verification	6
3.4	Task 4 - PGandE and Its Contractors; QA/QC Procedures	6
3.5	Error and Open Item (EOI) Report	6
4.0	Conclusion	7

Attachment A - Progress Report on Quality Assurance by RFR, Inc.

Attachment B-- R. F. Reedy, Inc. Review of Harding Lawson Associates

Attachment C-- R. F. Reedy, Inc. Review of EDS Nuclear

Attachment D - EOI Report for work period from 1/21/82 to 2/12/82

1. WORK ACCOMPLISHED:

There are four tasks of the subject reverification program. The work accomplished for each task in the report work period is described below:

1.1 Task 1 - Review of Seismic Design Chain

The work scope review of all seismic service-related contracts performed prior to June, 1978 is continuing. Six have been identified: URS/Blume, EES (Cygna), EDS Nuclear, ANCO, Wyle and Harding Lawson Associates.

1.2 Task 2 - Independent Requalification

The work accomplished for each item in this work period is given below.

1.2.1 Auxiliary Building

The shear area, gross area, moment of inertia, torsional rigidity and center of rigidity have been calculated and checked.

1.2.2 Piping Runs and Pipe Supports

The analysis of the Pressurizer line has been temporarily suspended pending additional information. Frequencies for 19 of 20 pipe supports have been computed and checked. They were found to agree with the PGandE criteria.

1.2.3 Equipment

The Diesel-Generator Oil Priming Tank analysis is finished and checked. A comparison of the RLCA analysis with the PGandE

analysis resulted in four EOI's.

The test response spectra used in the qualification test for the Group VI Electrica Equipment has been compared to the required Hosgri response spectra. An EOI was issued because the test response spectra did not envelope the Hosgri response spectra.

1.2.4 Conduit and HVAC Duct Supports

In a few cases, the as-built weights of raceways exceeded specified design weights. PGandE's check of these specific cases was examined and found to be adequate.

1.2.5 Small Bore Piping Runs and HVAC Components

The calculation for Supply Fan S31 is being checked. An examination of the small bore piping criteria has started.

1.3 Task 3 -- Field Verification

With the exception of the valves, HVAC Components and the mountings of equipment qualified by test, all equipment has been field verified. An EOI was issued for discrepancies in the yoke bracing for valve FCV-95.

1.4 Task 4 - PGandE and Its Contractors QA/QC Review and Audit

R. F. Reedy Inc. has completed the Audit Reports for EDS Nuclear and Harding Lawson Associates.

See Attachments A, B, C.

1.5 Error and Open Item (EOI) Report

The EOI Reports and QA Findings and Observations for this work period are given in Attachment D. An EOI was issued for each item identified in the preliminary report.

2.0 SIGNIFICANT RESULTS AND FINDINGS

No significant results or findings other than those listed in the EOI Report, QA Findings and QA Observations, are reported for the tasks performed in this work period.

3.0 SCHEDULED WORK FOR NEXT WORK PERIOD

3.1 Task 1-- Review of Seismic Design Chain

The report will be completed for the review of seismic service-related contracts performed prior to June 1978.

3.2 Task 2 - Independent Requalification

3.2.1 Auxiliary Building

The calculations for the mass, mass center and the mass moment of inertia will be checked.

3.2.2 Piping Runs and Piping Supports

Four piping analyses will be completed and checked. Comparison with PGandE analyses will start.

3.2.3 Equipment

The analysis for the CCW Heat Exchanger, CCW Pump, Supply Fan S31, Boric Acid Tank and Hot Shutdown Remote Control Panel will be checked.

3.2.4 Conduit and HVAC Duct Supports

The independent calculations of the two HVAC duct samples will continue.

3.2.5 Small Bore Piping Runs and HVAC Components

The completion of independent calculation of the HVAC

damper will be completed if additional design information is gathered. The independent calculations of some of the small bore piping runs will be accomplished and the evaluation of the criteria will be completed.

3.3. Task 3 - Field Verification

At least one field trip to the plant is planned to inspect and to verify the as-built support conditions for the small bore piping runs, some piping supports, piping runs and electrical equipment mounting.

3.4 Task 4 - PGandE and Its Contractors; QA/QC Review and Audit

See Attachment A for the schedule and the planned work for the next work period.

3.5 Error and Open Item Report

When the errors and/or open items are identified, they will be reported.

4.0 CONCLUSION

The work progress of the seismic reverification has been affected by the time spent responding to the NRC's questions in Washington. In addition, new items of scope have been incorporated as a result of this meeting.

The EOI issued because the test response spectra for the Group VI Electrical Equipment qualified by test did not envelope the required Hosgri response spectra has been labeled a Class A error. This equipment may need to be tested again with the correct test spectra, unless it can be shown that the required spectra is conservative.

Three QA Findings were issued as a result of the Harding Lawson QA Report. A program is being designed to provide engineering verification for the Harding Lawson work.

ATTACHMENT A

R. F. REEDY, INCORPORATED
236 N. Santa Cruz Avenue
Los Gatos, California 95030 • (408) 354-9110

February 9, 1982

RECEIVED
FEB 10 1982
Edward Stern

ROBERT L. CLOUD AND ASSOCIATES, INC.
125 University Avenue
Berkeley, California 94710

Subject: Biweekly Report of RFR, Inc. Activities Regarding PG&E Independent Audit, Phase I, January 20, 1982 through February 9, 1982

Dear Mr. Cloud:

This report covers our activities through February 9, 1982, with regard to our independent Quality Assurance reviews of the Diablo Canyon Unit 1 Plant.

To summarize our activities to date, we have completed the following steps in our review of the quality assurance programs of PG&E and the six primary organizations performing seismic safety-related design work under subcontract to PG&E:

(1) We have completed our reviews of PG&E's and the six subcontractors' quality assurance program manuals and procedures, using the Program Review Checklist included in our December 19, 1981 biweekly progress report.

(2) Lists of questions were generated as a result of the program reviews, and were presented to PG&E and the subcontractors, in preparation for program implementation audits. The questions were designed to clarify non-specific areas of the program manuals and to assist the audited organizations in understanding the scope of the audits to be performed. The lists of questions were included in our December 19, 1981 and January 4, 1982 biweekly progress reports.

(3) Detailed Audit Checklists were generated in preparation for our program implementation audits of PG&E and the six subcontractors. The Audit Checklists for ANCO Engineers and EDS Nuclear were included in our January 4, 1982 biweekly progress report, and the Audit Checklists for EES (Cygna), WYLE, URS/Blume, and Harding Lawson

Associates were included in our January 12, 1982 biweekly progress report. The Audit Checklist for PG&E has now been completed, and is attached as Appendix A to this report.

(4) We have completed the design service contractor implementation audits. The Audit Reports for EDS and Harding-Lawson Associates were completed and forwarded on January 26, 1982. The Audit Reports for EES, URS/Blume, WYLE, and ANCO are currently in preparation. As soon as the PG&E audit is finished, the remaining Audit Reports will be completed and forwarded.

Appendix B shows our schedule for completion of the implementation audits and audit reports for Phase I, as of this date.

Very truly yours,

Roger F. Reedy

Roger F. Reedy, P. E.
R. F. REEDY, INC.

RFR:na

Encl.

PG&E

SUPPLEMENTARY QUALITY ASSURANCE

AUDIT CHECKLIST

DIABLO CANYON UNIT #1

PART A:
General requirements and Management Control of Quality Assurance

PART B:
Design Control

PART C:
Follow-up Questions from Supplier Audits

PART A

Management Control of Q/A and General Requirements

AUDIT CHECKLIST

PART A

Company Pacific Gas & Electric Company				Page 1 of
Applicable QAM Rev. 0 thru Rev. 3		Auditor		Date
App. B. Crit.	QAM Ref.	Statement	Audit Instruction	Comment
I		Such persons and organizations performing quality assurance functions shall report to a management level such that this required authority and organizational freedom, including sufficient independence from cost and schedule when opposed to safety considerations, are provided (10CFR, App. B).	(a) Determine project organization and specific personnel in effect for time period (pre-June 78) by review of objective evidence. (b) Verify for quality engineering and quality assurance that the job functions and relationships described include sufficient independence from cost and schedule considerations when opposition to safety considerations may arise.	
	2.1.2	...Responsibility for execution and implementation of the Quality Assurance Program is assigned to both the Vice President-Engineering and Vice President-General Construction.... The Vice President-Engineering has primary responsibility for design...(and) is also responsible for development and coordination of the Quality Assurance Program.	(c) Verify that Quality personnel performing verification actions (Tests, Inspections, etc.) have authority and organizational freedom to identify quality problems, initiate, recommend or provide solutions to problems; verify implementation of solutions, and control further processing of nonconformances until proper dispotioning has occurred.	
	2.1.2 (a)p8	Has authority to stop work if technical and regulatory requirements are not being observed.		

AUDIT CHECKLIST

PART A

Company Pacific Gas & Electric Company				Page 2 of
Applicable QAM Rev. 0 thru Rev. 3			Auditor	Date
App. B. Crit.	QAM Ref.	Statement	Audit Instruction	Comment
			(d) Was work stopped by QE/QA manager?	
	2.1.3.1	Each Department Chief is responsible for...Development of quality assurance requirements for all vital components...Review and approval of quality assurance programs developed by others.	(a) Determine how this was accomplished.	
	2.1.3.4	Project Engineer: Coordination of all engineering activities with other departments.	(a) Determine how this was accomplished.	
	2.1.4	The Vice President-General Construction is responsible for administration and management of plant construction, etest, and startup, including full responsibility for all quality assurance aspects included in these activities....the Manager, Station Construction...Plans for and implements field quality control...Evaluates contractors. The Project Superintendent('s)...responsibility includ(s)...	(For information)	

AUDIT CHECKLIST

PART A

Company	Pacific Gas & Electric Company			Page 3 of
Applicable QAM Rev. 0 through Rev. 3		Auditor		Date
App. B. Crit.	QAM Ref.	Statement	Audit Instruction	Comment
I, cont.		Administration of construction contract, including the quality assurance provisions ....Review and approval of contractors' quality control programs...Also on the Project Superintendent's staff and reporting directly to him is the Coordinating Quality Control Engineer...the responsibilities of a Resident Engineer include...Direction of quality control activities...approval...of quality control plans... Supervision of Inspectors.		
	3.2.5.2	On-site surveillance is performed by the Station Construction Department.	Review for evidence of on-site surveillance by the Inspection Section.	
	3.2.5.3	The surveillance representative confirms on a continuing basis that the supplier's or contractor's system is adequate to assure that quality work will be accomplished.	Review reports of surveillance by Inspection Section.	

AUDIT CHECKLIST

PART A

Company Pacific Gas & Electric Company				Page 4 of
Applicable QAM Rev. 0 thru Rev. 3			Auditor	Date
App. B. Crit.	QAM Ref.	Statement	Audit Instruction	Comment
II	3.1.1	The Quality Assurance Program requires that written procedures be used in all key activities...periodic audits ...provide objective assurance of both the adequacy of the procedures and compliance with them.	(a) How did program assure procedures were developed for all key activities? (b) Verify that quality assurance audits provided objective evidence of the adequacy of the procedures, as well as compliance with them. (See XVIII)	
	3.6.2	Audit programs will examine (1) the adequacy of procedures and practices, and (2) the compliance with established procedures.	(c) Verify that the following procedures existed and are available: PRM-1, Rev. 0 PRE-1, Rev. 0 PRE-6, Rev. 0 PRE-11, Rev. 0 PRE-12, Rev. 0 PRE-13, Rev. 0 PRP-4, Revs. 0, 1, 2 PRP-5, Rev. 0 PRC-11, Rev. 2 (d) Prior to PRE-9 and PRE-10, what procedures applied to interface control, design changes, and design verification?	
	PRM-1 4.0	The Director, QA, will maintain a list of those holding QA manuals.	(e) Verify distribution to identified Project personnel.	

AUDIT CHECKLIST

PART A

Company	Pacific Gas & Electric Company			Page 5 of
Applicable QAM Rev. 0 thru Rev. 3		Auditor		Date
App. B. Crit.	QAM Ref.	Statement	Audit Instruction	Comment
II, cont.	1.2	...These items are classified as Design Class 1. The Program will be applied to any particular component, system or structure in a manner and to the extent appropriate to its importance in preventing or mitigating the consequences of a nuclear accident.	(For information)	
	3.2.1+ PRE-12	...The Project Engineer is responsible for identifying structures, systems and components covered by the Quality Assurance Program.	(a) Determine how these items were classified and designated, and how the extent of application of the Program was determined, reviewed, and verified.	
	. . .	The program shall provide for indoctrination and training of personnel performing activities affecting quality as necessary to assure that suitable proficiency is achieved and maintained. (10CFR50, App. B)	(a) Verify that training and indoctrination programs were conducted and documented (prior to PRM-4, 12/3/79). (b) Verify that effectiveness of training programs was audited and documented.	

AUDIT CHECKLIST

PART A

Company	Pacific Gas & Electric Company			Page 6 of
Applicable QAM	Rev. 0 thru Rev. 3	Auditor		Date

App. B. Crit.	QAM Ref.	Statement	Audit Instruction	Comment
II, cont.	3.3.2	Policy: Train field personnel for proficiency in special skills required by assigned duties.		
	3.6.2	Items for incorporation as part of these audit programs include the following as applicable...Familiarity of personnel with required documents...Effectiveness of training programs.		
	. . .	The applicant shall regularly review the status and adequacy of the quality assurance program. Management of other organizations participating in the quality assurance program shall regularly review the status and adequacy of that part of the quality assurance program which they are executing. (10CFR50, App. B)	(a) Verify that the status and adequacy of the PG&E quality assurance program was regularly reviewed and that the reviews were adequately documented.	
	2.1.2 (p.6)	Report on its adequacy and the extent to which it is being carried out (Director, QE/QA).	(b) Review evidence of review by General Office of Nuclear Plant Review and Audit Committee.	

AUDIT CHECKLIST

PART A

Company Pacific Gas & Electric Company				Page 7 of
Applicable QAM Rev. 0 thru Rev. 3			Auditor	Date
App. B. Crit.	QAM Ref.	Statement	Audit Instruction	Comment
IV	3.2.5.1	Specific requirements for suppliers' and contractors' quality assurance are contained in the following applicable documents which are either appended to or made a part of the specification or other purchase documents.... Supplementary Specification for Manufacturer's Quality Control Systems...Contractor's Quality Assurance Requirements...Supplier quality requirements for some components or work, where the above documents would be inappropriate are either included in the specification or in additional documents. These provisions require the supplier to use appropriate quality control systems to assure that the technical requirements are being met... Equipment suppliers are required to prepare and submit their quality assurance programs for review and approval ...Field contractors are required to prepare and submit their quality assurance manuals and inspection and test plans for review and approval.	(a) Do any of these requirements apply to subcontracted designers or consultants? If yes, verify that they were included in applicable procurement documents. If no, determine what quality assurance requirements were imposed. Determine when quality assurance requirements were imposed on subcontracted designers or consultants by PG&E.	

AUDIT CHECKLIST

PART A

Company Pacific Gas & Electric Company				Page 8 of
Applicable QAM Rev. 0 thru Rev. 3			Auditor	Date
App. B. Crit.	QAM Ref.	Statement	Audit Instruction	Comment
IV	3.2.4.3	The Responsible Engineer receives a copy of the purchase order after issuance and is required to confirm that the technical and quality control requirements are correct.	(a) Verify that the Responsible Engineer documented his approval of the technical and quality-related requirements of purchase orders for subcontracted design and consulting services. (b) Was Quality Assurance Engineering involved in the review of purchase orders to ensure inclusion of applicable quality assurance requirements?	

AUDIT CHECKLIST

PART A

Company	Pacific Gas & Electric Company			Page 9 of
Applicable QAM	Rev. 0 thru Rev. 3	Auditor		Date

App. B. Crit.	QAM Ref.	Statement	Audit Instruction	Comment
V, VI	3.1.2	The procedures developed to control documents include... a means by which persons involved in the work can verify that a copy of a document which they hold is an up-to-date and complete copy.	(a) Verify that such a means of determining the status of documents was available. (b) PRE-1, Rev. 0, referenced PRE-5. Why was PRE-5 never issued?	

AUDIT CHECKLIST

PART A

Company Pacific Gas & Electric Company				Page 10of
Applicable QAM Rev. 0 thru Rev. 3			Auditor	Date
App. B. Crit.	QAM Ref.	Statement	Audit Instruction	Comment
VII	3.2.4.1	Lists of technically qualified suppliers for equipment specifications are developed by the Responsible Engineer and reviewed and approved by the Materials Department... Qualified bidders' lists for construction contracts are developed by the Manager, Station Construction, and reviewed and approved by the Materials Department...The Responsible Engineer reviews the program the equipment suppliers intend to follow to meet the specified quality control requirements...(The) recommendation as to which bidder should receive the aware...is approved by the Responsible Engineer's supervision in accordance with policies established by the Vice President-Engineering... For construction contracts, the Station Construction Department evaluates the contractors' proposals and prepares the recommendation for award.	(a) Was Quality Assurance Engineering involved in the review of the programs of equipment suppliers, design subcontractors, or consultants? (b) What policies were established by the Vice President of Engineering with regard to bidder evaluations? Verify that they were followed. (c) How does the Station Construction Department verify that contractors' proposals have adequate quality assurance provisions?	

AUDIT CHECKLIST

PART A

Company	Pacific Gas & Electric Company			Page 12 of
Applicable QAM	Rev. 0 thru Rev. 3	Auditor		Date
App. B. Crit.	QAM Ref.	Statement	Audit Instruction	Comment
VII	3.2.5.3	The PG&E surveillance representative...brings major problems to the attention of the supplier's or contractor's management and the Responsible Engineer, and in these cases it is required that the corrective action be approved by the Responsible Engineer.	(a) What criteria does the PG&E surveillance representative use to determine when problems are major and should be brought to the attention of the Responsible Engineer? (b) Verify that corrective action was approved by the Responsible Engineer. (c) Was Quality Assurance Engineering involved in subcontractor surveillance?	

AUDIT CHECKLIST

PART A

Company	Pacific Gas & Electric Company			Page 12 of
Applicable QAM Rev. 0 thru Rev. 3		Auditor		Date
App. B. Crit.	QAM Ref.	Statement	Audit Instruction	Comment
VII	3.3.1	Policy: Execute the on-site quality control necessary to support the PG&E Quality Assurance Program...Each field engineer or inspector is assigned an individual structure and/or item of work for which he is responsible for verifying compliance with Engineering design and specification. Only the latest drawing information is used. Either PG&E or contractor prepared quality procedures are used for examination of the work...A report of the examination result is prepared, dated and signed by the inspector and forwarded to his superior. If lack of compliance is evident, the matter is immediately taken up with the responsible contractor for correction. Upon completion of the work, including correction if required, the report is filed. Daily logs are maintained to provide a history of activity and continuity of work. Inspection is performed to the extent deemed necessary by the supervision, taking into account the subject matter, records kept, design and specification, and criticality of system.	(a) Verify that inspection activities were recorded in daily logs. (b) How did the supervision determine the extent of inspection that was necessary? Was Quality Assurance Engineering or the Responsible Engineer involved in that determination? (c) How did the field engineer or inspector know that he had the latest drawing? (d) Who determined what procedure to use for the work? How was that documented?	

Company	Pacific Gas & Electric Company		Page 13 of
Applicable QAM	Rev. 0 thru Rev. 3	Auditor	Date

App. B. Crit.	QAM Ref.	Statement	Audit Instruction	Comment
VII		Documentary evidence that material and equipment conform to the procurement requirements shall be available at the nuclear power plant.... prior to installation or use of such material and equipment. This documentary evidence shall be retained at the nuclear power plant...and shall be sufficient to identify the specific requirements, such as codes, standards, or specifications, set by the purchased material and equipment. (10CFR50, App. B)	Verify that the designs, analyses, tests, and qualifications subcontracted by PG&E were actually performed, received, and reviewed by responsible PG&E personnel to verify conformance to the specified procurement requirements.	
		The effectiveness of the control of quality by contractors shall be assessed by the applicant or designee at intervals consistent with the importance, complexity, and quality of the product or services. (10CFR50, App. B)	Verify that design subcontractors' and consultants' quality assurance programs were surveyed and audited at intervals consistent with importance, complexity, and quality of service.	

Company	Pacific Gas and Electric Company			Page 14 of
Applicable QAM Rev. 0 thru Rev. 3		Auditor		Date
App. B. Crit.	QAM Ref.	Statement	Audit Instruction	Comment
XVI		Measures shall be established to assure that conditions adverse to quality, such as failures, malfunctions, deficiencies, deviations, defective material and equipment, and nonconformances are promptly identified and corrected. In the case of significant conditions adverse to quality, the measure shall assure that the cause of the condition is determined, and corrective action taken to preclude repetition. The identification of the significant conditions adverse to quality, the cause of the condition, and the corrective action taken shall be documented and reported to appropriate levels of management. (10CFR50, App. B)	Prior to issuance of PRN-3 (2/1/78), what measures were established to identify and control conditions adverse to quality and obtain corrective action to prevent recurrence? Verify that these measures were followed and that corrective actions were effectively implemented.	

AUDIT CHECKLIST

PART A

Company · Pacific Gas & Electric Company				Page 15 of
Applicable QAM	Rev. 0 thru Rev. 3	Auditor		Date
App. B. Crit.	QAM Ref.	Statement	Audit Instruction	Comment
XVIII	3.6.1 + PRM-2	The Director, Quality Engineering, is responsible for making planned periodic audits of design, procurement, supplier and contractor quality control, construction, start-up, records, training programs, and personnel and procedure certification functions as they relate to the Quality Assurance Program... Members of audit teams will not have direct responsibility in the area of being audited.	(a) Review audit schedules for planning. (b) Verify that all aspects of the quality assurance program were audited, including Quality Assurance Engineering. (c) Verify that audits evaluated adequacy of procedures. (d) Verify that auditors were independent of the area being audited (especially for engineers assigned to auditing).	
	2.1.2	...Engineers assigned to the Quality Engineering Section will be experienced in plant design and construction and familiar with the quality requirements of the project... Personnel assigned to the Quality Engineering Section will be experienced engineers specially chosen for their knowledge and judgement. Insofar as possible, audits will be conducted by individuals who have had no close connections with the function being audited.	(e) Verify that auditors were properly qualified and trained. (f) Verify that audit results were issued within 10 days and were reviewed by responsible management. (g) Verify that follow-up action and timing including reaudit of deficient areas, was taken where necessary.	

PART B

Design Control

AUDIT CHECKLIST

PART B

Company Pacific Gas and Electric Company				Page 1 of 13
Applicable QAM	Rev. 0 thru Rev. 3	Auditor		Date
App. B. Crit.	QAM Ref.	Statement	Audit Instruction	Comment
III	3.2.1	The Department of Engineering is responsible for the preparation of designs and specifications....This responsibility includes the specification of quality assurance requirements....The Quality Assurance Program requires written procedures which assure that the regulatory requirements and the design bases are properly incorporated in the specifications, drawings, and the other design documents prepared by the Department of Engineering. A system of design reviews is provided to verify that designs meet requirements in all respects....Responsible Engineers develop design criteria...Where design commitments are made in the PSAR or other filings before the Atomic Energy Commission, they are incorporated into the design....Questions in this area are referred for resolution to the Safety Analysis Report Group.	(For Information)	
	3.2.2.1	Using the design criteria, the design inputs, and conceptual design as a starting point, design drawings are prepared.		
	3.2.2.2	Specifications and purchase orders are reviewed by the Safety Analysis Report Group to confirm that the regulatory requirements are properly incorporated.		

AUDIT CHECKLIST

PART B

Company	Pacific Gas & Electric Company			Page 2 of 13
Applicable QAM	Rev. 0 thru 3	Auditor		Date
App. B. Crit.	QAM Ref.	Statement	Audit Instruction	Comment
1.	PRE-1, Revs. 1, 2, 3	The Project Engineer is responsible for preparation and issuance of the following: Project Correspondance File Index • • • Summary of Specifications • • •	(a) Verify that the Project Engineer prepared a Project Correspondence File Index and a Summary of Specifications. (b) Randomly select a minimum of 6 Class I items (2 from each discipline, Electrical, Mechanical, and Civil), from the Summary of Specifications, for later use in verifying design criteria and engineering releases were prepared per PRE-2 and PRE-14 (See Checklist items 2 and 14)	
2.	PRE-2, Rev 3	Para. 3.2.1 - Each assigned engineer shall develop and prepare information which identifies the specific functions to be performed by a structure, system, or component, and the specific values or range of values chosen for controlling parameters as reference bounds for design... This information is to be documented by a Design Criteria Memorandum or similar document.	Verify that Design Criteria Memoranda were prepared for items selected in 1, above.	

Company	Pacific Gas & Electric Company		Page 3 of 13
Applicable QAM	Rev. 0 thru Rev. 3	Auditor	Date

App. B. Crit.	QAM Ref.	Statement	Audit Instruction	Comment
3.	PRE-3, Rev. 1	Para. 2.2-Responsible Engineers are responsible for:1) providing written design criteria in accordance with PRE-2, "Design Development," to the Design-Drafting Department for the Development of Project drawings...	For the items selected in 1., above, verify written design criteria were provided to the Design Drafting Department.	
4.	PRE-4, Revs. 1, 2	The complete file of specifications with all approved changes is located in the Engineering Department Central Files.	Verify that the specification file for the items chosen in 1., above, is complete.	
5.	3.2.2.2	Design reviews are conducted by competent persons other than those who performed the original design...: Comprehensive reviews of Design Class I structures and systems assure that the necessary design steps have been taken.	(a) Verify that Design Reviews were performed, and by individuals other than those who performed the original design. (b) How were the necessary design steps determined and documented? Verify that the necessary steps were taken.	

Company Pacific Gas & Electric Company				
Applicable QAM	Rev. 0 thru Rev. 3		Auditor	Date
App. B. Crit.	QAM Ref.	Statement	Audit Instruction	Comment
5. cont.	PRE-6 Rev. 0 (?) 7/17/70	Para. 3.1 - Comprehensive reviews of Design Class I structures and systems shall be conducted to assure that the design is complete and adequate, and confirm that the design bases have been properly incorporated in the design. Para. 3.2 - The Responsible Engineer or Lead Engineer will notify the Supervising Engineer when the design is complete enough for a review to be conducted. The Supervising Engineer will then designate an engineer to conduct the review. The design review will be conducted by a qualified engineer who has had no significant involvement in the design under review. The reviewing engineer will prepare a report of his work.	(c) Verify required design reviews for items chosen in 1., above, have been performed. (d) Check reports for the items chosen in 1., above. NOTE: Final Hosgri Criteria established May 9, 1977.	

AUDIT CHECKLIST

PART B

Company	Pacific Gas and Electric			Page 5 of 13
Applicable QAM	Rev. 0 thru Rev. 3	Auditor		Date
App. B. Crit.	QAM Ref.	Statement	Audit Instruction	Comment
5. cont.	PRE-6 Rev. 0 (?) 7/17/70	Design reviews shall consider as a minimum the design steps outlined in Quality Assurance Procedure PRE-2, "Design Development". An engineer conducting a review shall make thorough preparations and shall develop a plan to assure that all critical aspects of the design are examined. Engineers conducting reviews shall also justify why certain aspects, if any, were not considered. A typical System Design Review Check List for guidance in preparation of the design review procedure is attached.	(e) Verify existence of plan developed in accordance with PRE-6. (Note this requirement was deleted in Rev. 1, dated March 15, 1977.)	

AUDIT CHECKLIST

Part B

Company Pacific Gas and Electric Company

Applicable QAM Rev. 0 thru Rev. 3 | Auditor | Date

App. B. Crit.	QAM Ref.	Statement	Audit Instruction	Comment
III 6.	3.2.2.3	Design changes, including changes proposed by suppliers and contractors, are referred to the Responsible Engineer and his Supervising Engineer for review and written approval.	(a) Verify that design changes were approved by the Responsible Engineer and his Supervising Engineer. (b) Verify that Design Reviews were performed to determine the impact of design changes on the original designs.	
	PRE 11		(c) Verify that changes were reviewed for impact and change to FSAR.	

AUDIT CHECKLIST

Part B

Company Pacific Gas and Electric Company

Applicable QAM	Rev. 0 thru Rev. 3	Auditor	Date

App. B. Crit.	QAM Ref.	Statement	Audit Instruction	Comment
III 7.	3.2.2.2	Suppliers/contractors performing design are also required to conduct design reviews.	How did PG&E ensure that suppliers/contractors conducted design reviews? Verify that PG&E procurement documents required design reviews to be performed.	
		The Responsible Engineer does not check a supplier's design unless there is reason to believe such a check is necessary.	What criteria is used to determine the necessity of such a review? Determine if any such reviews were performed.	

AUDIT CHECKLIST

Company Pacific Gas and Electric Company				Page 8 of 13
Applicable QAM Rev. 0 thru Rev. 3			Auditor	Date
App. B. Crit.	QAM Ref.	Statement	Audit Instruction	Comment
III 8.	3.2.4.1	The Responsible Engineer develops the technical requirements and coordinates the work done by interfacing engineers on the specification. Draft specifications are reviewed by all engineers engaged in the design whose work might be affected by the equipment, and by other engineers as appropriate, e.g., material applications and quality assurance.... The final specifications are reviewed and signed off by the Responsible Engineer, and the Department Chiefs. ...	(a) How does the Responsible Engineer coordinate the interfacing engineers for work on specifications? (b) Were final specifications reviewed with all the interfacing engineers who made comments on the draft specifications? (c) Verify that the final specifications were reviewed and approved by the Responsible Engineer and the Department Chiefs.	

AUDIT CHECKLIST

PART B

Company Pacific Gas and Electric Company				Page 9 of 13
Applicable QAM Rev. 0 thru Rev. 3		Auditor		Date
App. B. Crit.	QAM Ref.	Statement	Audit Instruction	Comment
III & IV 9.	3.2.2.2	...Correspondence, construction drawings, specifications, etc. are reviewed by Supervising Engineers and others who may be affected in their principal responsibility.... In addition, the Responsible Engineer reviews correspondence received from suppliers.	(a) Who determines who may be affected? What criteria are used in the determination? (b) Verify that correspondence was reviewed by Supervising Engineers and the Responsible Engineer. (c) Review correspondence and documentation to and from PG&E and ANCO, URS/Blume, EDS, EES, Harding-Lawson and Wyle for control and distribution. (d) Review drawing transmittals to Blume for piping analysis work to determine whether design or as-builts were sent.	

AUDIT CHECKLIST

PART B

Company Pacific Gas and Electric Company

Applicable QAM Rev. 0 thru Rev. 3 | Auditor | Date

App. B. Crit.	QAM Ref.	Statement	Audit Instruction	Comment
III 10.	3.2.2.2	Where a design is so innovative or has so many inter-related requirements that independent review by individual engineers would not assure a comprehensive view, a review meeting is held with concerned engineers and the Responsible Engineers. Situations requiring this review are identified by the Supervising Engineers and it is their responsibility to call and conduct such meetings.	Does the Supervising Engineer determine when a design is "so innovative" or has "many inter-related requirements"? What criteria are used in the determination and how is it documented?	

AUDIT CHECKLIST

PART B

Company Pacific Gas and Electric Company

Applicable QAM Rev. 0 thru Rev. 3 | Auditor | Date

App. B. Crit.	QAM Ref.	Statement	Audit Instruction	Comment
III 11.	3.2.2.1	If changes are made later to the drawing, they must be designated in the change block and approved by the Responsible Engineer, (the Lead gineer,, and) the Supervising Engineer. (Rev. 3, 4/15/74).	Verify that drawing changes were approved by the Responsible Engineer or the Supervising Engineer, prior to 4/15/74, and by the Responsible Engineer, the Lead Engineer, and the Supervising Engineer, after 4/15/74.	
12.	3.2.4.3	...The Station Construction Department may edit the technical material furnished in the EMM, but any changes of substance to the technical material require approval of the Responsible Engineer.	How is it determined whether the Station Construction Department changes to technical material are editorial or technical, and who makes that determination?	

AUDIT CHECKLIST

PART B

Company	Pacific Gas & Electric Company			Page 12 of 13
Applicable QAM	Rev. 0 thru Rev. 3	Auditor		Date
App. B. Crit.	QAM Ref.	Statement	Audit Instruction	Comment
13.	PRE-13, Revs. 1 & 2	Para. 2.1 (Rev. 1) The Supervisor, Records and Reproduction, of Design -Drafting Department is responsible for preparing and distributing copies of the Construction Drawing List. Para. 3.2 (Rev. 2) The Construction Drawing List will be reissued monthly. Para 3.2.1 - Supplements to update the Construction Drawing Index will be issued periodically, but at least every two weeks.	Verify existence of Construction Drawing List. a) Check that Construction Drawing List was kept up to date. b) Verify that Construction Drawing Index supplements were issued periodically. c) Verify that applicable drawings for items chosen in 1., above, appear on the Construction Drawing List. d) Check against list sent to subcontractors.	

Company	Pacific Gas & Electric Company			Page 13 of 13
Applicable QAM	Rev. 0 thru Rev. 3	Auditor		Date
App. B. Crit.	QAM Ref.	Statement	Audit Instruction	Comment
14.	PRE-14, Rev. 1	Para. 2.1 - The assigned engineer is responsible for: (1) initiating the Engineering Release form; (2) coordinating, if necessary, the review of all documents listed on the form; and (3) evaluating, approving, and forwarding the Engineering Release to his supervisor.	Verify that engineering release forms were completed for the items chosen in 1., above.	
		Para. 2.5 - The Manager, Station Construction, is responsible for issuing Manager's Releases and Field Installation Releases and assuring that no Design Class I component is installed in the plant without a satisfactorily completed Engineering Release, Manager's Release, or Field Installation Release. A Field Installation Release may be used for listed Design Class I off-the-shelf items purchased by PG&E Engineering for which the quality can be verified after receipt.	Verify, if possible, that releases were issued prior to installation for the items chosen in 1., above. (Note that supplement to PRE-14 dated January 20, 1971, modifies this requirement under certain circumstances.)	

PART C

Follow-up Questions from Supplier Audits

Company P.G & E				
Applicable QAM			Auditor	Date
App. B. Crit.	QAM Ref.	Statement	Audit Instruction	Comment
III		Items for PG&E Audit - From RFP's EDS Audit File.	1) Review contents of PG&E File 146.29, plus others as applicable, for evidence of interface instructions, control of design criteria control of design inputs, etc. 2) Review level of control established for PG&E document "Guidelines for Design of Pipe Supports & Restraints." This was basic criteria document for both EDS & EES work. 3) Review design file for support #58S-37A (EDS calculation package #022). EDS recommended stiffening of support to meet design allowables. Was support changed in field? (Revision 3 of calculation package should be in file as current revision.) 4) Review design file for support #98-96A (EDS calculation package #030). EDS recommended modification to meet criteria. Was support modified in field? Revision 0 of calculation file was used by EDS.)	

AUDIT CHECKLIST

Part C

Company				
Applicable QAM			Auditor	Date
App. B. Crit.	QAM Ref.	Statement	Audit Instruction	Comment
			5) Review design file for support #74-6A (EDS calculation package #036). EDS recommended anchor bolt modification to meet design criteria. Were anchor bolt changes made? (Revision 4 of calculation was issued by EDS & should be in file).	

AUDIT CHECKLIST

Part C

Company				
Applicable QAM			Auditor	Date
App. B. Crit.	QAM Ref.	Statement	Audit Instruction	Comment
III		Items for PG&E Audit - From RFP's EES (Cygna) Audit File.	1) Review PG&E file for evidence of scope of work definition and interface controls. Was EES ever responsible for piping analysis? 2) Check control over PG&E document "Guidelines for Pipe Supports and Restraints" Why did EES use Revision 4 & EDS only have Revision 1? What was in Revisions 2,3, & 4 that would pertain to EDS scope? What was in Revision 2 (not received by EES) that would effect EES scope? 3) PG&E letters transmitted lists of hangers to be analyzed, and therefore established scope of work. EES file had the following letters: 10/19/77, 9/26/77, 9/7/77, 9/1/77, 8/16/77 (2 letters), 7/25/77, 7/13/77, 7/12/77, 7/6/77, 7/1/77, and 3/31/77. Is there evidence of other letters in PG&E file not received by EES? 4) PG&E letters dated 7/13/77 transmitted data indicating design of support #48-17R should be verified by EES. EES has no record of what was done with this support (See	

AUDIT CHECKLIST

Part C

Company				
Applicable QAM			Auditor	Date
App. B. Crit.	QAM Ref.	Statement	Audit Instruction	Comment
			EES AFR-1.) What PG&E records regarding this support? 5) Check a minimum of 5 more supports chosen at random from correspondence listed in item 3, above, to verify that PG&E design criteria were met. Check documentation accompanying transmittal of design criteria, and transmittal of engineering suppliers' recommended design changes. 6) EES recommended a change to design of hanger #98-134R. Check for evidence of receipt of information at PG&E and implementation of recommendation (EES calculation file #137).	

ATTACHMENT B

R. F. REEDY, INCORPORATED
236 N. Santa Cruz Avenue
Los Gatos, California 95030 • (408) 354-9110

January 26, 1982

Robert L. Cloud and Associates, Inc.
125 University Avenue
Berkeley, CA 94710

Subject: Report of R. F. Reedy, Inc.
Review of Harding Lawson Associates

Dear Mr. Cloud:

Attached is a copy of our Quality Assurance Review report of Harding Lawson Associates (HLA). We have reviewed the HLA Quality Assurance Program as it related to seismic safety-related design services performed for Pacific Gas and Electric Company prior to June 1978. All details of our review are contained in this final report.

In view of the fact that we could not verify that the HLA Program met the requirements of 10CFR50, Appendix B, we recommend that an independent geological review be conducted for the work performed prior to June, 1978.

Very truly yours,

Roger F. Reedy, P.E.
R. F. REEDY, INC.

RFR:na

Encl.

RECEIVED
JAN 27 1982

QUALITY ASSURANCE REVIEW REPORT

PHASE I

SEISMIC SAFETY-RELATED DESIGN SERVICES

PERFORMED FOR PG&E

By

HARDING LAWSON ASSOCIATES

PRIOR TO JUNE 1978

R. F. Reedy, Inc.
January 26, 1982
HLA 1/64

Quality Assurance Program Review Report
Phase I
Seismic Safety-Related Design Services
Performed for PG&E
By
Harding Lawson Associates
Prior to June, 1978

Introduction

Scope:

On January 11, 1982, R. F. Reedy, Inc. completed the Quality Assurance Review and Audit of Harding Lawson Associates (HLA).

The purpose of this review and audit was to address the adequacy of HLA's quality assurance procedures, controls and practices concerning the development, accuracy and transmittal of seismic safety-related information by HLA to PG&E and other consultants to PG&E. The basis of this review and audit was to determine if the HLA Quality Assurance Program as implemented prior to June 1978 met the related requirements of 10CFR50, Appendix B for the seismic safety-related design services performed for PG&E's Diablo Canyon Unit 1 Plant.

Type of Design Services:

During the time in question HLA performed soil investigations, geotechnical studies and consulting for the Diablo Canyon Unit 1 Plant. The principal purposes of the HLA work was to determine physical characteristics of subsurface materials, provide design criteria and specifications for soil fills, provide design criteria for foundation support and to determine slope stabilities.

Contracts:

PG&E had identified the following series of PG&E General Manager Authorizations (contracts) applicable to HLA prior to June 1978. These were:

(1) M167027	(2) Letter	(3) Authorization	(4) Contract	(5) HLA Job No.
	3/14/68	64303	Eng. 11-68	569.8
	12/10/68	64832		569.8
	12/22/69	65598		569.010.04
	9/26/73	68869		569.021.04
	1/15/74	68869-A		569.021.04
	2/21/78	68869-B		569.031.04
	5/ 3/78	68869-C		569.034.04 & 569.035.04

On January 8, 1982, we received a listing (HLA Jobs, Diablo Canyon, PG&E) of all HLA contracts with PG&E(included as Appendix B to this report). The correlation to HLA job number shown in (5), above, is apparent and was not positively verified. Based on our review and discussion of the HLA listing with Mr. H. Taylor of HLA, we concluded that parts of each contract included seismic safety-related design work, and therefore, our review would encompass objective evidence from each contract and none were excluded from consideration.

Evaluation Criteria:

Our Quality Assurance Review of HLA used the applicable requirements of 10CFR50, Appendix B and included ANSI Standard N45.2.20, "Supplementary Quality Assurance Requirements for Subsurface Investigations for Nuclear Power Plants," as the Quality Assurance criteria that were to be met. We evaluated the HLA Quality Assurance Manual and procedures applicable at the time the activities were performed, reviewed documentation and records, and interviewed HLA key employees to evaluate implementation compliance with the requirements of Appendix B and N45.2.20.

It should be pointed out that HLA contracts began in 1968 and the NRC (AEC at that time) requirements of 10CFR50, Appendix B were not published until 1970. In addition, the final draft of the ANSI N45.2.20 was only issued for final balloting of the ANSI N45.2 Committee in 1978. Further we could not find any evidence that the requirements of Appendix B were imposed on HLA contracts. Because of this much of our review was to establish whether or not the essential criteria of these documents were met.

Conclusions

On the basis of our review it was concluded that:

(1) HLA was not required to implement a formal Quality Assurance Program for their activities prior to April 10, 1978.

(2) The HLA Quality Assurance Program and operating procedures applicable to the activities performed prior to June 1978 did not prescribe adequate controls to comply with the applicable criteria requirements of 10CFR50, Appendix B, or ANSI N45.2.20.

(3) There was not sufficient objective evidence available at HLA to establish that a controlled system was in effect which could be accepted as equivalent to 10CFR50, Appendix B.

Method of Review

The method of review for HLA consisted of the following steps enumerated as (1) through (4) below:

(1) An introductory meeting was held with HLA on December 28, 1981. The purpose of this meeting was to obtain an understanding of the HLA organization, the type of design services provided to PG&E, and to verify what controlling program, practices and procedures had been applied to the work performed. We also indicated the type of Quality Assurance review we would be making. Our questions during this meeting were based on a preliminary review of the HLA Quality Assurance Manual and Operating Procedures. Appendix A lists the HLA, PG&E and R. F. Reedy, Inc. personnel in attendance at all meetings with HLA.

(2) We reviewed the HLA Operating Procedures and Quality Assurance Manual applicable to activities performed prior to April 10, 1978. This review consisted of a comparison of the Procedures and Manual with the 10CFR50, Appendix B criteria requirements for I Organization; II Program; III Design Control; IV Procurement Document Control; V Instructions, Procedures and Drawings; VI Document Control; VII Control of Purchased Material, Equipment and Services; XVI Corrective Action; XVII Quality Assurance Records; and XVIII Audits. These criteria were selected as being applicable to HLA based on their work. HLA also subcontracts for certain services such as boring and laboratory testing. The Program Review checklist is included as Appendix C of this report. The HLA Field Engineer's Notebook, October 1973, was included in the review as part of HLA's operating procedures.

(3) Because our review disclosed an inadequate Quality Assurance program in comparison to the applicable 10CFR50 Appendix B criteria, a meaningful audit checklist could not be used to review the HLA program. Therefore, it was decided to use the generic program review-audit checklist included as Appendix D of this report. The basic approach was to audit what evidence did exist to determine whether or not an equivalent quality assurance system had been in effect.

(4) The Quality Assurance audit of HLA was performed on January 8 and 11, 1982. It became apparent on January 8 that the audit could not be conducted as structured. It was then decided to review documentation and notes and to interview for evidence of compliance. Additionally, on January 11, an interview-review against the requirements of ANSI N45.2.20, was performed. A summary of comments from the January 8 and 9 review is included as Appendix E of this report.

Summary of Findings and Observations

The primary findings is that a Quality Assurance Program was not in effect for the scope of work we reviewed. The above findings were reviewed with Mr. Henry Taylor at an exit interview and he stated he did not disagree.

APPENDIX A

HLA ATTENDANCE LIST

Attendance

Name	Company	Question Meeting 12/28/81	Audit 1/8/82	Audit 1/11/82
H. T. Taylor	HLA	x	x	x
M. M. Sweeny	PG&E		x	
F. Zerebinski	PG&E	x		x
P. J. Herbert	RFR, Inc.	x		
W. S. Gibbons	RFR, Inc.	x	x	x
R. F. Reedy	RFR, Inc.	x	x	x

APPENDIX B

HLA CONTRACT LIST

ATTACHMENT B

HLA JOBS, DIABLO CANYON, PG&E

HLA NUMBER	DESCRIPTION	REMARKS
569.8	Soil Investigation Intake and Discharge Lines Borrow Area and Switchyards Unit 1 and 2	1968
569,010.04	Soil Investigations, Consultation and Field Observations Included- Power Plant Slope Fill Site Landslide on Bluff Pismo Beach Laydown Switchyard Fills Rock Bolting Excavation Discharge Structure Intake Structure Warehouse	1969 through 1973
569,021.04	Stability Evaluation Power Plant Cut Slope Also- Bluff Landslide Security and Administration Building Raw Water Ponds Solid Radwaste Storage Facility	1973 to 1976
569,031.04	Geotechnical Studies Included- Water Storage Tanks Diesel Fuel Oil Tanks Intake Structure	February 1978
569,034.04	Consultation Included- Water Storage Tanks Raw Water Reservoir Area Cut Slope Above Plant NRC Meetings Simulator-Administration Buildings Archeological Resource SLO-2 Breakwater Model Aggregate Sludge Pond Entrance Road Condensate Tanks	April 1978 to present
569,035.04	Comprehensive Design Review of the Auxiliary Saltwater Piping System	April 1978

APPENDIX C

HLA PROGRAM REVIEW CHECKLIST

R. F. REEDY, INC.

PROGRAM REVIEW CHECKLIST

ORGANIZATION: Harding Lawson Associates (HLA)

ADDRESS: 20 Hawthorne Street

San Francisco, CA 94105

QA PROGRAM REFERENCE: QA Program, no date

Operating Procedures, no date

REVIEW CONDUCTED BY: [signature] DATE: 12/24/81

REVIEWED BY: [signature] DATE: 1/2/82

[signature] DATE: 1/5/82 RFR

[signature] DATE: 1/2/82

NO. OF PAGES: 20

PROGRAM REVIEW CHECKLIST

PROJECT: Diablo Canyon Subject: I Organization (App. B) Page 1 of 2

ITEM NO.	REQUIREMENT	PROGRAM AND PROCEDURE REFERENCES	YES	NO	N/A	REVIEW COMMENTS
1.	The applicant shall be responsible for the establishment and execution of the quality assurance program. The applicant may delegate to others, such as contractors, agents, or consultants, the work of establishing and executing the quality assurance program, or any part thereof, but shall retain responsibility therefor.			x		QA Program was supposedly prepared in 1977. The QA Manual and Operating Procedures transmittal is dated 12/7/81.
2.	The authority and duties of persons and organizations performing activities affecting the safety-related functions of structures, systems, and components shall be clearly established and delineated in writing. These activities include both the performing functions of attaining quality objectives and the quality assurance functions. The quality assurance functions are those of (a) assuring that an appropriate quality assurance program is established and effectively executed and (b) verifying, such as by checking, auditing, and inspection, that activities affecting the safety-related functions have been correctly performed.	II		x		Quality objectives and responsibilities are not addressed until 1977 QA Program.

PROGRAM REVIEW CHECKLIST

PROJECT: Diablo Canyon Subject: I Organization (App. B) Page 2 of 2

ITEM NO.	REQUIREMENT	PROGRAM AND PROCEDURE REFERENCES	YES	NO	N/A	REVIEW COMMENTS
3.	The persons and organizations performing quality assurance functions shall have sufficient authority and organizational freedom to identify quality problems; to initiate, recommend, or provide solutions; and to verify implementation of solutions. Such persons and organizations performing quality assurance functions shall report to a management level such that this required authority and organizational freedom, including sufficient independence from cost and schedule when opposed to safety considerations, are provided.	II Page 2		x		Not addressed until 1977 QAP. Independence is not stated, except as shown in organizational chart.
4.	...the individual(s) assigned the responsibility for assuring effective execution of any portion of the quality assurance program at any location where activities subject to this Appendix are being performed shall have direct access to such levels of management as may be necessary to perform this function.	II		x		Same as item 3 above.

HLA 1/26/82 13/64

PROGRAM REVIEW CHECKLIST

PROJECT: Diablo Canyon Subject: II Program (App. B) Page 1 of 3

ITEM NO.	REQUIREMENT	PROGRAM AND PROCEDURE REFERENCES	YES	NO	N/A	REVIEW COMMENTS
1.	The applicant shall establish at the earliest practicable time, consistent with the schedule for accomplishing the activities, a quality assurance program which complies with the requirements of this Appendix. This program shall be documented by written policies, procedures, or instructions, and shall be carried out throughout plant life in accordance with those policies, procedures, or instructions.	QA Program Manual		x		Not established before 1977, and maybe not before 12/7/81.
2.	The applicant shall identify the structures, systems, and components to be covered by the quality assurance program and the major organizations participating in the program, together with the designated functions of these organizations.			x		Not addressed.

HLA 1/26/82 14/64

PROGRAM REVIEW CHECKLIST

PROJECT: Diablo Canyon Subject: II Program (App. B)

ITEM NO.	REQUIREMENT	PROGRAM AND PROCEDURE REFERENCES	YES	NO	N/A	REVIEW COMMENTS
3.	The quality assurance program shall provide control over activities affecting the quality of the identified structures, systems, and components, to an extent consistent with their importance to safety.			x		Not addressed.
4.	Activities affecting quality shall be accomplished under suitably controlled conditions. Conditions include the use of appropriate equipment; suitable environmental conditions for accomplishing the activity, such as adequate cleanness; and assurance that all prerequisites for the given activity have been satisfied.			x		Not addressed.
5.	The program shall take into account the need for special controls, processes, test equipment, tools, and skills to attain the required quality, and the need for verification of quality by inspection and test.	III-B		x		Not adequately addressed. Training is inadequate; equipment controls are almost nonexistent. HLA 1/26/82 15/64

PROGRAM REVIEW CHECKLIST

PROJECT: Diablo Canyon Subject: II Program (App. B)

ITEM NO.	REQUIREMENT	PROGRAM AND PROCEDURE REFERENCES	YES	NO	N/A	REVIEW COMMENTS
6.	The program shall provide for indoctrination and training of personnel performing activities affecting quality as necessary to assure that suitable proficiency is achieved and maintained.	II		x		Indoctrination and training consists of an evening program and on-the-job review.
7.	The applicant shall regularly review the status and adequacy of the quality assurance program. Management of other organizations participating in the quality assurance program shall regularly review the status and adequacy of that part of the quality assurance program which they are executing.	II		x		QA Officer reports to HLA management after adoption of 1977 QAP. HLA 1/26/82 16/64

PROGRAM REVIEW CHECKLIST

PROJECT: Diablo Canyon Subject: III Design Control (App. B) Page 1 of 4

ITEM NO.	REQUIREMENT	PROGRAM AND PROCEDURE REFERENCES	YES	NO	N/A	REVIEW COMMENTS
1.	Measures shall be established to assure that applicable regulatory requirements and the design basis, as defined in Para. 50.2 and as specified in the license application, for those structures, sytems and components to which this Appendix applies are correctly translated into specifications, drawings, procedures, and instructions.			x		Not addressed.
2.	These measures shall include provisions to assure that appropriate quality standards are specified and included in design documents and that deviations from such standards are controlled.	III-A		x		Mentioned, but not specific. References written instructions for field exploration.

HLA 1/26/82 17/64

PROGRAM REVIEW CHECKLIST

PROJECT: Diablo Canyon Subject: III Design Control (App. B) Page 2 of 4

ITEM NO.	REQUIREMENT	PROGRAM AND PROCEDURE REFERENCES	YES	NO	N/A	REVIEW COMMENTS
3.	Measures shall also be established for the selection and review for suitability of application of materials, parts, equipment, and processes that are essential to the safety-related functions of the structures, systems, and components.			x		Not addressed.
4.	Measures shall be established for the identification and control of design interfaces and for coordination among participating design organizations..			x		Not addressed.
5.	These measures shall include the establishment of procedures among participating design organizations for the review, approval, release, distribution, and revision of documents involving design interfaces.			x		Not addressed.

HLA 1/26/82 18/64

PROGRAM REVIEW CHECKLIST

JECT: Diablo Canyon Subject: III Design Control (App. B) Page 3 of 4

EM	REQUIREMENT	PROGRAM AND PROCEDURE REFERENCES	YES	NO	N/A	REVIEW COMMENTS
	The design control measures shall provide for verifying or checking the adequacy of design, such as by the performance of design reviews, by the use of alternative or simplified calculational methods, or by the performance of a suitable testing program. The verifying or checking process shall be performed by individuals or groups other than those who performed the original design, but who may be from the same organization. Where a test program is used to verify the adequacy of a specific design feature in lieu of other verifying or checking processes, it shall include suitable qualifications testing of a prototype unit under the most adverse design conditions. Design control measures shall be applied to items such as the following: reactor physics, stress, thermal, hydraulic, and accident analyses; compatibility of materials; accessibility for inservice inspection, maintenance, and repair; and delineation of acceptance criteria for inspections and tests.				x	HLA 1/26/82 19/64

PROGRAM REVIEW CHECKLIST

PROJECT: Diablo Canyon Subject: III Design Control (App. B) Page 4 of 4

ITEM NO.	REQUIREMENT	PROGRAM AND PROCEDURE REFERENCES	YES	NO	N/A	REVIEW COMMENTS
7.	Design changes, including field changes, shall be subject to design control measures commensurate with those applied to the original design and be approved by the organization that performed the original design unless the applicant designates another responsible organization.				x	

HLA 1/26/82 20/64

PROGRAM REVIEW CHECKLIST

PROJECT: Diablo Canyon Subject: IV Procurement Document Control (App. B) Page 1 of 1

ITEM NO.	REQUIREMENT	PROGRAM AND PROCEDURE REFERENCES	YES	NO	N/A	REVIEW COMMENTS
1.	Measures shall be established to assure that applicable regulatory requirements, design bases, and other requirements which are necessary to assure adequate quality are suitably included or referenced in documents for procurement of material, equipment, and services, whether purchased by the applicant or by its contractor or subcontractor.			x		No procurement or subcontracting addressed.
2.	To the extent necessary procurement documents shall require contractors or subcontractors to provide a quality assurance program consistent with the pertinent provisions of this Appendix.			x		Not addressed.

HLA 1/26/82 21/64

PROGRAM REVIEW CHECKLIST

PROJECT: Diablo Canyon Subject: V Instructions, Procedures, and Drawings (App. B) Page 1 of 1

ITEM NO.	REQUIREMENT	PROGRAM AND PROCEDURE REFERENCES	YES	NO	N/A	REVIEW COMMENTS
1.	Activities affecting quality shall be prescribed by documented instructions, procedures, or drawings of a type appropriate to the circumstances and shall be accomplished in accordance with these instructions, procedures, or drawings.	III-A III-B III-D		x		Written instructions, Field Engineer's Notebook, and Office Engineering Notebook are mentioned; no specifics are provided.
2.	Instructions, procedures, or drawings shall include appropriate or qualitative acceptance criteria for determining that important activities have been satisfactorily accomplished.			x		Not addressed.

HLA 1/26/82 22/64

PROGRAM REVIEW CHECKLIST

OJECT: Diablo Canyon Subject: VI Document Control (App. B) Page 1 of 1

EM O.	REQUIREMENT	PROGRAM AND PROCEDURE REFERENCES	YES	NO	N/A	REVIEW COMMENTS
	Measures shall be established to control the issuance of documents, such as instructions, procedures, and drawings, including changes thereto, which prescribe all activities, affecting quality.			x		Not covered.
	These measures shall assure that documents, including changes, are reviewed for adequacy and approved for release by authorized personnel, and are distributed to and used at the location where the prescribed activity is performed.			x		Some documents are reviewed; extent and description are inadequate.
	Changes to documents shall be reviewed and approved by the same organizations that performed the original review and approval unless the applicant designates another responsible organization.			x		Not addressed. HLA 1/26/82 23/64

PROGRAM REVIEW CHECKLIST
VII Control of Purchased Material,
Equipment, and Services (App. B)

PROJECT: Diablo Canyon Subject:

ITEM NO.	REQUIREMENT	PROGRAM AND PROCEDURE REFERENCES	YES	NO	N/A	REVIEW COMMENTS
1.	Measures shall be established to assure that purchased material, equipment, and services, whether purchased directly or through contractors and subcontractors, conform to the procurement documents.				x	
2.	These measures shall include provisions, as appropriate, for source evaluation and selection, objective evidence of quality furnished by the contractor or subcontractor, inspection at the contractor or subcontractor source and examination of products upon delivery.				x	HLA 1/26/82 24/64

PROGRAM REVIEW CHECKLIST
VII Control of Purchased Material,
ROJECT: Diablo Canyon Subject: Equipment, and Services (App. B) Page 2 of 2

TEM NO.	REQUIREMENT	PROGRAM AND PROCEDURE REFERENCES	YES	NO	N/A	REVIEW COMMENTS
3.	Documentary evidence that material and equipment conform to the procurement requirements shall be available at the nuclear power-plant...prior to installation or use of such material and equipment. This documentary evidence shall be retained at the nuclear power-plant...and shall be sufficient to identify the specific requirements, such as codes, standards, or specifications, met by the purchased material and equipment.				x	
4.	The effectiveness of the control of quality by contractors shall be assessed by the applicant or designee at intervals consistent with the importance, complexity, and quantity of the product or services.				x	HLA 1/26/82 25/64

PROGRAM REVIEW CHECKLIST

PROJECT: Diablo Canyon Subject: XVI Corrective Action (App. B) Page 1 of 2

ITEM NO.	REQUIREMENT	PROGRAM AND PROCEDURE REFERENCES	YES	NO	N/A	REVIEW COMMENTS
1.	Measures shall be established to assure that conditions adverse to quality, such as failures, malfunctions, deficiencies, deviations, defective material and equipment, and nonconformances are promptly identified and corrected.			x		Not addressed.
2.	In the case of significant conditions adverse to quality, the measures shall assure that the cause of the condition is determined, and corrective action taken to preclude repetition.	III-F		x		Briefly mentioned; inadequately addressed.

HLA 1/26/82 26/64

PROGRAM REVIEW CHECKLIST

PROJECT: Diablo Canyon Subject: XVI Corrective Action (App. B) Page 2 of 2

ITEM NO.	REQUIREMENT	PROGRAM AND PROCEDURE REFERENCES	YES	NO	N/A	REVIEW COMMENTS
3.	The identification of the significant conditions adverse to quality, the cause of the condition, and the corrective action taken shall be documented and reported to appropriate levels of management.			x		Not addressed.

HLA 1/26/82 27/64

PROGRAM REVIEW CHECKLIST

PROJECT: Diablo Canyon Subject: XVII Quality Assurance Records (App. B) Page 1 of 2

ITEM NO.	REQUIREMENT	PROGRAM AND PROCEDURE REFERENCES	YES	NO	N/A	REVIEW COMMENTS
1.	Sufficient records shall be maintained to furnish evidence of activities affecting quality.	III-G		x		Left to project engineer to develop.
2.	The records shall include at least the following: Operating logs and the results of reviews, inspections, tests, audits, monitoring of work performance, and materials analyses. The records shall also include closely-related data such as qualifications of personnel, procedures, and equipment.			x		Not addressed.
3.	Inspection and test records shall, as a minimum, identify the inspector or data recorder, the type of observation, the results, the acceptability, and the action taken in connection with any deficiencies noted.			x		Not adequately addressed. HLA 1/26/82 28/64

PROGRAM REVIEW CHECKLIST

PROJECT: Diablo Canyon Subject: XVII Quality Assurance Records (App. B) Page 2 of 2

ITEM NO.	REQUIREMENT	PROGRAM AND PROCEDURE REFERENCES	YES	NO	N/A	REVIEW COMMENTS
4.	Records shall be identifiable and retrievable. Consistent with applicable regulatory requirements, the applicant shall establish requirements concerning record retention, such as duration, location, and assigned responsibility.	III-G		x		1977 OAP adds 10-year commitment for non-permanent records. Controls are not addressed.

HLA 1/26/82 29/64

PROGRAM REVIEW CHECKLIST

PROJECT: Diablo Canyon Subject: XVIII Audits (App. B) Page 1 of 2

ITEM NO.	REQUIREMENT	PROGRAM AND PROCEDURE REFERENCES	YES	NO	N/A	REVIEW COMMENTS
1.	A comprehensive system of planned and periodic audits shall be carried out to verify compliance with all aspects of the quality assurance program and to determine the effectiveness of the program.	II-A		x		QA Officer monitors.
2.	The audits shall be performed in accordance with the written procedures or check lists by appropriately trained personnel not having direct responsibility in the areas being audited.			x		Not addressed.
3.	Audit results shall be documented and reviewed by management having responsibility in the area audited.	II-A		x		QA Officer reports to HLA management; the QAP does not say what he reports. HLA 1/26/82 30/64

PROGRAM REVIEW CHECKLIST

PROJECT: Diablo Canyon Subject: XVIII Audits (App. B) Page 2 of 2

ITEM NO.	REQUIREMENT	PROGRAM AND PROCEDURE REFERENCES	YES	NO	N/A	REVIEW COMMENTS
4.	Follow-up action, including reaudit of deficient areas, shall be taken where indicated.			x		Not addressed.

HLA 1/26/82 31/64

APPENDIX D

HLA AUDIT CHECKLIST

<1056>

R. F. REEDY, INC.

AUDIT CHECKLIST

ORGANIZATION: Harding Lawson Associates

ADDRESS: 20 Hawthorne Street

San Francisco, California 94105

QA PROGRAM REFERENCE: QA Program, no date
Operating Procedures, no date
Field Engineer's Notebook, October 1973

AUDIT CONDUCTED BY: _____ DATE: _____

_____ DATE: _____

_____ DATE: _____

REVIEWED BY: _____ DATE: _____

_____ DATE: _____

_____ DATE: _____

NO. OF PAGES: 28

HLA 1/26/82 33/64

AUDIT CHECKLIST

Company Harding Lawson Associates				Page 1 of 28
Applicable QAM no date			Auditor	Date
App. B. Crit.	QAM Ref.	Statement	Audit Instruction	Comment
I 1.		Responsibility and authority for attaining and verifying quality. Ref:	Verify that the organization chart depicts the operating structure of the company. Focus attention on functional responsibilities, levels of authority, and lines of communication for the management, direction and execution of the quality program.	
2.		Responsibility for Quality Assurance program management and direction. Ref:	Verify the position and relationship of the Quality Assurance Manager to upper management. Review written evaluation reports on the effectiveness of the overall quality program submitted by the person in charge of the quality program or internal audit reports. Check reports for distribution to senior management of the company.	
3.		Independence of personnel performing verification action. Ref:	Verify that quality personnel performing verification actions have authority and organizational freedom to identify quality problems; initiate, recommend or provide solutions to problems; verify implementation of solutions; and control further processing of nonconformances until proper dispositioning has occurred.	HLA 1/26/82 34/64

AUDIT CHECKLIST

Company Harding Lawson Associates				Page 2 of 28
Applicable QAM no date			Auditor	Date
App. B. Crit.	QAM Ref.	Statement	Audit Instruction	Comment
II 1.		Management review of quality program status and adequacy. Ref:	Verify functional managers review actions of the quality program for which they have prime responsibility for execution. Review documentation submitted by responsible managers on quality activities, or internal audit reports for evidence of implementation.	
2.		Indoctrination and training program. Ref:	Verify implementation of the indoctrination and training program. Examine training records for evidence of personnel proficiency levels, type of training and methods of instruction.	
3.		Revised and distributed through a controlled system. Ref:	Verify implementation of the system in use for the control and distribution of the quality program (manual and procedures) to include changes. Review changes (revisions) and check for review and approval actions. Check on requirement for customer acceptance prior to implementation. Verify that quality program manual used is the same revision and date as the copy accepted by the client.	HLA 1/26/82 35/64

AUDIT CHECKLIST

Company Harding Lawson Associates				Page 3 of 28
Applicable QAM no date			Auditor	Date
App. B. Crit.	QAM Ref.	Statement	Audit Instruction	Comment
III 1.		Translation of design requirements into design documents. Ref:	Examine engineering specifications, drawings, instructions and procedures for inclusion of applicable technical requirements. NOTE: Requirements are based on contract requirements and applicable codes and standards referenced therein. Check for inclusion of applicable quality requirements.	
2.		Control of deviations from design requirement and quality standards. Ref:	Verify implementation of the system governing control of deviations from design requirements and quality standards. Check that deviations are properly identified, documented and subjected to review and approval actions.	
3.		Identification and control of design interfaces. Ref:	Verify implementation of the system governing control of design interfaces. Check documentation for evidence of coordination and the review, approval, release and distribution by organizations or departments involved.	HLA 1/26/82 36/64

AUDIT CHECKLIST

Company Harding Lawson				Page 5 of 28
Applicable QAM no date			Auditor	Date
App. B. Crit.	QAM Ref.	Statement	Audit Instruction	Comment
IV 1.		Inclusion of all applicable requirements in procurement documents. Ref:	Examine supplier procurement documents (P.O.,M/R specifications, etc.) for inclusion of specific technical and quality requirements, to include those quality requirements and controls that must be further extended to subcontractors and suppliers.	
2.		Release and control of procurement documents. Ref:	Verify implementation of the system used to control and release procurement documents. Examine documents for review and approvals required prior to release.	
3.		Changes controlled as original procurement documents. Ref:	Examine changes (revisions) to procurement documents to verify that controls exercised were the same as that applied to the original procurement documents.	
				HLA 1/26/82 38/64

AUDIT CHECKLIST

Company Harding Lawson				Page 6 of 28
Applicable QAM no date			Auditor	Date
App. B. Crit.	QAM Ref.	Statement	Audit Instruction	Comment
V 1.		a. Documented description of activities affecting quality. b. Compliance with documented description. c. Inclusion of acceptance criteria in prescribed documents. Ref:	Verify that written procedures and plans referenced in the quality program are in fact established, documented and in use in the facility. Verify that instructions, procedures and drawings used for both work performance and verification action include qualitative and quantitative criteria.	HLA. 1/26/82 39/64

AUDIT CHECKLIST

Company Harding Lawson				Page 7 of 28
Applicable QAM no date			Auditor	Date
App. B. Crit.	QAM Ref.	Statement	Audit Instruction	Comment
VI 1.		Release and control of documents. Ref:	Verify that document control procedures are available and in use. Examine distribution system used and verify that records indicate what documents have been issued and to whom, and that obsolete documents are controlled and dispositioned.	
2.		Review and approval of documents by authorized personnel. Ref:	Examine selected quality documents and verify that reviews for adequacy and approval by authorized personnel have been accomplished.	
3.		Changes controlled as original documents. Ref:	Examine changes to documents and verify that issuance was within the scope and authority of the contract and that those requiring customer approval prior to implementation have been accepted. Verify that the effectivity point, review action and approval for release are documented. Verify that the control measures applied to the changes were the same as that used for the original documents. Examine the control register/log used for recording changes and verify that a record reflecting history of change incorporation is being maintained.	HLA 1/26/82 40/64

AUDIT CHECKLIST

Company Harding Lawson				Page 8 of 28
Applicable QAM no date			Auditor	Date
App. B. Crit.	QAM Ref.	Statement	Audit Instruction	Comment
VII 1.		Conformance of purchased items and services to procurement documents. Ref:	Verify that written procedures for this activity are available and in use.	
2.		Evaluation and selection of suppliers. Ref:	Verify implementation of the system used for the selection and evaluation of suppliers and subcontractors. Examine related documentation to verify that evaluations were performed prior to award of contracts and at the specified frequency. Check the qualifications of personnel performing the evaluations.	
3.		Inspection of purchased items on receipt. Ref:	Verify implementation of the system used for receiving inspection by reviewing related documents, or as appropriate, observing the operation-points of audit: a. Receiving checks incoming shipments to requirements of the purchase order, referenced specification or applicable drawings.	HLA 1/26/82 41/64

AUDIT CHECKLIST

Company Harding Lawson				Page 9 of 28
Applicable QAM no date			Auditor	Date
App. B. Crit.	QAM Ref.	Statement	Audit Instruction	Comment
VII			b. Material accepted on test reports or statements of conformance are subject to verification tests. c. Receiving inspection records indicate acceptance of material, or rejection of material with reasons therefore. d. Rejected material is identified and controlled. e. Inspected items controlled and identified from material awaiting inspection. f. Inspection personnel are qualified.	
4.		Documented evidence of conformance. Ref: _____	As required by customer contract or referenced codes, standards and specifications therein, verify that supplier or subcontractor generated documents (drawings, quality manuals, certifications, test results and inspection data for completeness, acceptability and conformance to contract requirements) were submitted and approved prior to acceptance of material.	HLA 1/26/82 42/64

AUDIT CHECKLIST

Company Harding Lawson				Page 10 of 28
Applicable QAM no date		Auditor		Date
App. B. Crit.	QAM Ref.	Statement	Audit Instruction	Comment
VII cont'd 5.		Assessment of supplier quality related activities. Ref: _____	Review documentation to verify that the functions for the control of quality of purchased material, equipment or services were subject to internal audit.	HLA 1/26/82 43/64

AUDIT CHECKLIST

Company Harding Lawson				
Applicable QAM no date			Auditor	Date
App. B. Crit.	QAM Ref.	Statement	Audit Instruction	Comment
VIII 1.		Establishment and maintenance of item identification and control. Ref:	Examine items or related documentation to verify implementation of the system used for identification of material, parts and/or components. Check to ensure markings have not caused a detrimental effect on material. Check items subdivided for transfer of markings to each part. Verify implementation of the system used to control material, parts and/or components. Points of audit: -handling and storage methods used to prevent damage, contamination or loss, -control of items awaiting inspection and/or test results; and items that have been rejected, and -identification and acceptance status of items of production is maintained throughout all phases of manufacture.	HLA 1/26/82 44/64

AUDIT CHECKLIST

Company Harding Lawson				Page 12 of 28
Applicable QAM no date			Auditor	Date
App. B. Crit.	QAM Ref.	Statement	Audit Instruction	Comment
VIII cont'd 2.		Traceability of items.	Examine items or related documentation, to verify implementation of the system used for traceability of material, parts or components. Verify that material is traceable to specific chemical/physical analysis, statements of conformance, test documents, purchase order, or other documents.	HLA 1/26/82 45/64

AUDIT CHECKLIST

Company Harding Lawson				Page 13 of 28
Applicable QAM no date			Auditor	Date
App. B. Crit.	QAM Ref.	Statement	Audit Instruction	Comment
IX 1.		Establishment of process controls and qualification of personnel, procedures and equipment. Ref:	Determine applicable special processes and verify that implementation is being accomplished under controlled conditions in accordance with contract requirements or codes, standards and specifications referenced therein.	HLA 1/26/82 46/64

AUDIT CHECKLIST

Company Harding Lawson				Page 14 of 28
Applicable QAM no date			Auditor	Date
App. B. Crit.	QAM Ref.	Statement	Audit Instruction	Comment
X 1.		Establishment and execution of inspection program. Ref:	Verify implementation of the inspection program in use by the supplier to verify his company's performance to documented instructions, procedures and drawings.	
2.		Independence of inspectors. Ref:	Question personnel and review related documentation to verify that personnel performing verification actions are other than those who perform the activity being inspected and that they do not report directly to the supervisors who are responsible for the work being inspected.	
3.		In-process and final inspections. Ref:	Check work or inspection instruction (shop traveler, processing plans, etc.) in use for inclusion of the following minimum data, as applicable: a. Function to be performed and sequence of operations. b. Inspection points and/or hold points. c. Specifications to be used to include drawing numbers and revisions applied.	HLA 1/26/82 47/64

AUDIT CHECKLIST

Company Harding Lawson				Page 15 of 28
Applicable QAM no date			Auditor	Date
App. B. Crit.	QAM Ref.	Statement	Audit Instruction	Comment
X Cont'd 4.			d. Definition of acceptance criteria. e. Material, tools, gages and inspection equipment used. f. Workmanship criteria to include characteristics to be inspected (dimensions, tolerances, operating limits). Check inspection equipment used for current calibration status. Check qualifications of inspection personnel, per QA Program requirements.	HLA 1/26/82 48/64

AUDIT CHECKLIST

Company Harding Lawson				Page 16 of 28
Applicable QAM no date		Auditor		Date
App. B. Crit.	QAM Ref.	Statement	Audit Instruction	Comment
X Cont'd 5.		Documentation and evaluation of inspection results. Ref: _____	Examine records of inspection and verify inclusion of the following minimum data: a. Date of inspection b. Identity of inspector c. Type of observation d. The results e. The acceptability f. Action taken in connection with any deficiences noted. Verify that inspection results are reviewed by responsible authority.	HLA 1/26/82 49/64

AUDIT CHECKLIST

Company Harding Lawson				Page 17 of 28
Applicable QAM no date			Auditor	Date
App. B. Crit.	QAM Ref.	Statement	Audit Instruction	Comment
XI 1.		Establishment and execution of test program. Ref:	Verify implementation of the test program in use by the supplier.	
2.		Inclusion of test requirements, acceptance criteria and test conditions in test documents. Ref:	Examine test documents in use for the following minimum data: a. Acceptance criteria b. Tools, gages and test equipment to be used c. Specifications, drawing numbers and revisions to be applied d. Details on the methods and tests to be performed e. Characteristics to be tested and checked f. Inspection and/or Hold Points Check test equipment used for current calibration status. Check qualifications of test personnel, per QA Program requirements.	HLA 1/26/82 50/64

Company Harding Lawson				Page 18 of 28
Applicable QAM no date			Auditor	Date
App. B. Crit.	QAM Ref.	Statement	Audit Instruction	Comment
XI Cont'd 3.		Documentation and evaluation of test results. Ref: _____	Examine test records and verify inclusion of the following minimum data: a. Identity of the test, type test conducted, and person performing the test b. Procedure/instruction used for the test c. Acceptance standards and test results d. Final acceptance Verify that test results are reviewed by responsible authority.	

AUDIT CHECKLIST

Company Harding Lawson				Page 19 of 28
Applicable QAM no date			Auditor	Date
App. B. Crit.	QAM Ref.	Statement	Audit Instruction	Comment
XII 1.		Calibration and control of measuring and test equipment. Ref:	Verify implementation of the system in use for the calibration and control of measuring and test equipment. Points of audit: a. Written procedures available and in use for calibration of items b. Tools, gages and test equipment identified with date calibrated, date due for next calibration, and the serial number (or other code) c. Employee owned tools and gages used for acceptance purposes subject to the same controls as company owned tools d. Tools, gages and test equipment in the calibration system subject to mandatory recall e. Checkout and accountability system for items in use Examine calibration records and verify inclusion of the following minimum data: a. Item identity number, name and location b. Frequency of calibration and the applicable procedure used for the calibration	HLA 1/26/82 52/64

Company Harding Lawson

Applicable QAM no date | Auditor | Date

App. B. Crit.	QAM Ref.	Statement	Audit Instruction	Comment
XII Cont'd			c. The date calibrated and date due the next calibration d. The name of the person(s) or subcontractor performing the calibration	
2.		Maintenance and Control of standards. Ref:	Examine the standards used and verify traceability to the National Bureau of Standards, or other recognized standards. As applicable, examine documentation to verify that subcontractor performing the calibration service is a recognized testing agency	
3.		Evaluation of discrepant material and affected items. Ref:	Verify implementation of the system in use to evaluate the validity of previous inspection or test results, and the acceptability of items previously inspected or tested, when equipment is found to be out of calibration.	
				HLA 1/26/82 53/64

Company Harding Lawson

Applicable QAM no date	Auditor	Date

App. B. Crit.	QAM Ref.	Statement	Audit Instruction	Comment
XIII 1.		Control of handling, storage and shipping. Ref:	Verify implementation of the system in use for the control of handling, storage and shipping. Storage: a. Written procedures for the control and issuance of material available and in use b. Status indicators on material in storage c. Control of items d. Storage areas (rooms) restricted to authorized personnel, as required.	
2.		Control of cleaning, preservation and packaging.	Verify implementation of the system in use for marking and labeling items for packaging, shipment and storage. Check procedures used to inspect and test special handling tools and equipment, as applicable.	HLA 1/26/82 54/64

Company Harding Lawson				Page 22 of 28
Applicable QAM no date			Auditor	Date
App. B. Crit.	QAM Ref.	Statement	Audit Instruction	Comment
XIV 1.		Indication of inspection and test status. Ref: _____	Verify implementation of the system used to assure that the acceptability of items subjected to inspection and tests are known throughout manufacturing. Points of audit: a. Means to identify inspection and test status of items b. Procedure for control of status indicators, including authority for application and removal	
2.		Indication of operating status. Ref: _____	Verify implementation of the means in use for indicating the operating status of systems and components to prevent inadvertent operation.	
				HLA 1/26/82 55/64

Company Harding Lawson

Applicable QAM no date | Auditor | Date

App. B. Crit.	QAM Ref.	Statement	Audit Instruction	Comment
XV 1.		Control of nonconforming items, processes and activities. Ref:	Verify that documented procedures are available and in use to control items, services or activities which do not conform to requirements.	
2.		Identification, documentation and segregation of nonconforming items. Ref:	Examine documentation to verify implementation of the system in use to identify, document and segregate nonconforming items to prevent unauthorized use or shipment.	
3.		Disposition of nonconforming items. Ref:	Verify implementation of the system in use for the review, acceptance, rejection, repair or rework of nonconforming items.	
4.		Inspection of repaired or reworked items. Ref:	Examine documentation and verify that repaired and reworked items are reinspected in accordance with applicated procedures.	
5.		Extension of nonconformance reporting to subcontractors and suppliers. Ref:	Review written reports on nonconformances to verify notification is provided to affected organization.	HLA 1/26/82 56/64

Company Harding Lawson				Page 24 of 28
Applicable QAM no date			Auditor	Date
App. B. Crit.	QAM Ref.	Statement	Audit Instruction	Comment
XV Cont'd 6.		Maintenance of nonconformance records.	Verify maintenance of nonconforming data. Points of audit: a. Records indicate material review action, description of deficiencies, corrective action taken and final disposition b. Review and analysis of repetitive deficiencies for determining causes and measures to preclude recurrence.	HLA 1/26/82 57/64

Company Harding Lawson				Page 25 of 28
Applicable QAM no date			Auditor	Date
App. B. Crit.	QAM Ref.	Statement	Audit Instruction	Comment
XVI 1.		Identification and correction of conditions adverse to quality. Ref:	Review documentation to verify the system in use to identify, report and correct conditions adverse to quality, such as failures, deviations, defective material and equipment and other nonconformances. Points of audit include checking date of reports, time to complete actions, and "open" items.	
2.		Determination of causes of adverse quality conditions. Ref:	Request for and review documentation to verify implementation of the system in use to determine the causes of significant conditions adverse to quality and the corrective action taken to preclude repetition.	
3.		Documentation and reporting of corrective actions. Ref:	Examine documentation (corrective action reports) and check for the following minimum data: a. Identification and description of the deficiency b. Verification of the deficiency c. Comments on the analysis to determine the cause of the deficiency	HLA 1/26/82 58/64

Company Harding Lawson

Applicable QAM no date | Auditor | Date

App. B. Crit.	QAM Ref.	Statement	Audit Instruction	Comment
XVI Cont'd			d. Corrective actions taken to include a review and approval by responsible authority to indicate the adequacy of the action.	
4.		Extension of corrective action controls to subcontractors and suppliers. Ref: _____	Verify implementation of the system in use to extend corrective action requirements to subcontractors and suppliers.	
				HLA 1/26/82 59/64

Company Harding Lawson

Applicable QAM no. date | Auditor | Date

App. B. Crit.	QAM Ref.	Statement	Audit Instruction	Comment
XVII 1.		Preparation and maintenance of quality assurance records. Ref:	Verify that written procedures are available and in use for the maintenance of quality assurance records.	
2.		Identification of types of records. Ref:	Examine quality assurance file to verify record maintenance on the following: Inspection and test records, reports of audit, quality related procedures and instructions, personnel qualifications and certifications, material analysis reports, statements of conformance, operating logs.	
3.		Retrievability of records. Ref:	Verify that quality assurance records are readily retrievable, identifiable and available for review by authorized personnel.	
4.		Retention of records. Ref:	Concurrent with the above checks verify that records are maintained in facilities that provide protection against environmental effect, damage and loss, and that requirements for storage, transmittal and retention are established in accordance with customer contract requirements or codes and standards referenced therein.	HLA 1/26/82 60/64

Company Harding Lawson

Applicable QAM no date | Auditor | Date

App. B. Crit.	QAM Ref.	Statement	Audit Instruction	Comment
XVIII 1.		Documented planning of quality assurance audits. Ref:	Verify that written procedures are available and in use for audits of the quality program.	
2.		Audit performance and responsibility. Ref:	Review documentation to verify that audits are performed in accordance with written procedures indicated above, and that personnel performing the audits are appropriately trained and have no direct responsibility in the area being audited.	
3.		Documentation and reporting of audit results. Ref:	Review reports of audit and verify review by responsible management.	
4.		Follow-up action. Ref:	Review audit file and verify that follow-up action is being taken on deficiencies and that such action is continued to provide final resolution of the deficiency.	

APPENDIX E

COMMENTS NOTED DURING THE

HLA AUDIT REVIEW

January 8 and 11, 1982

Change order 8 to PG&E contract 11-68 dated April 10, 1978, amended the contract to require HLA to implement a Quality Assurance Program. This program was approved as being in accordance with AQAP-51, Specification for Consultants QA Program. AQAP-51 was sent to HLA on February 3, 1978 and HLA's program was approved on March 14, 1978 in a PG&E memorandum, S. D. Krein to J. A. McLaughlin. We could not verify that HLA program implemented AQAP-51 based on our review of objective evidence. On March 24, 1978, a copy of ANSI N45.2.20 was sent to HLA but HLA was not requested to implement the provisions of this standard.

Subcontracts by HLA included:

(1) Various drilling companies to perform site borings at Diablo Canyon.

(2) Geo Testing, Inc., Earth Materials Laboratory, San Rafael, CA for soils testing.

(3) Dr. R. N. Hwang, J. C., Berkeley, CA for consulting and computer calculations.

On this equipment, only the timing can go out of calibration and when it does the equipment does not work. This information was via telecon with W. Black in HLA's Novato, CA, office.

In reviewing documentation, we found unchecked calculations and field and lab reports which were not signed off as independently checked.

We could not verify by objective evidence at HLA that computer program had been verified. It was stated that all computer programs used were in the public domain.

Few formal transmittals, except for sending reports, existed between HLA and PG&E. Principal information interchange appeared to have resulted from meetings and telephone calls.

HLA's principal method of design review was that report drafts were reviewed by a consultant, other than the originator, and then the final report was

reviewed by a different consultant who had not been involved with the work. We were told that a HLA principal is always involved in each project.

We were informed that calibration of equipment was only applicable to the seismograph used during the geophysical testing - a period of approximately two weeks.

ATTACHMENT C

R. F. REEDY, INCORPORATED
236 N. Santa Cruz Avenue
Los Gatos, California 95030 • (408) 354-9110

January 20, 1982

Robert L. Cloud and Associates, Inc.
125 University Avenue
Berkeley, CA 94710

Subject: Report of R. F. Reedy, Inc.
Review of EDS Nuclear, Inc.

Dear Mr. Cloud:

Attached is a copy of our Quality Assurance Review report of EDS Nuclear, Inc. (EDS). We have reviewed the EDS Quality Assurance Program as it related to seismic safety-related design services performed for Pacific Gas and Electric Company prior to June, 1978. All details of our review are contained in this final report.

Very truly yours,

Roger F. Reedy

Roger F. Reedy, P.E.
R. F. REEDY, INC.

RFR:na

Encl.

RECEIVED
JAN 25 1982

QUALITY ASSURANCE REVIEW REPORT

PHASE I

SEISMIC SAFETY-RELATED DESIGN SERVICES

PERFORMED FOR PG&E

By

EDS NUCLEAR, INC.

PRIOR TO JUNE 1978

RECEIVED
JAN 25 1982

R. F. Reedy, Inc.
January 20, 1982
1/38

Quality Assurance Program Review Report
Phase I
Seismic Safety-Related Design Services
Performed for PG&E
By
EDS Nuclear, Inc.
Prior to June, 1978

Introduction

Scope:

On January 6, 1982, R. F. Reedy, Inc. completed the Quality Assurance Review and Audit of EDS Nuclear, Inc. (EDS).

The purpose of this review and audit was to address the adequacy of EDS' quality assurance procedures, controls and practices concerning the development, accuracy and transmittal of seismic safety-related information by EDS to PG&E and other consultants to PG&E. The basis of this review and audit was to determine if the EDS Quality Assurance Program as implemented prior to June 1978 met the related requirements of 10CFR50, Appendix B for the seismic safety-related design services performed for PG&E's Diablo Canyon Unit 1 Plant.

Type of Design Services:

During the time in question, EDS performed a structural evaluation of pipe anchors for piping systems installed at the Diablo Canyon Unit 1 Plant. The purpose of the evaluation was to review previously designed pipe anchors for new design conditions.

Contracts:

On December 22, 1981, PG&E identified three contracts which had been made with EDS prior to June 1978. These contracts were numbered 5-25-71, 5-25-74, and 5-65-77.

On January 5, 1982, we received a listing (Summary of EDS Experience with Pacific Gas and Electric Company) of all EDS contracts with PG&E. The above-listed contracts were included, along with all other contracts between EDS and PG&E to date. Since all job tasks for these contracts were sequentially numbered, it was easy to verify the PG&E contract list. We reviewed the scope of contract 5-25-71, which pertained to the dead load and thermal analysis of a pipeline. No seismic safety-related work was performed and therefore this contract was not made part of our review.

PG&E contract 5-5-74 was also investigated. The scope statement in the contract was not clear about whether or not the work involved was seismic safety-related. However, a review of the documented work performed by EDS and the final EDS report showed that the job consisted of a design review of the containment insolation system, the Class 1E Electrical System for the control room pressurization system and the HVAC. The design review was made to determine if the PG&E design input considered all available data and if Regulatory Guides and other codes and standards were properly considered. No calculations or analysis of any seismic safety-related equipment was performed by EDS. Therefore this contract was not subject to our review.

Contract 5-65-77 was for the structural evaluation of pipe anchors for four load conditions (Normal, Design Earthquake, Double Design Earthquake, and Hosgri Earthquake), including calculations of design earthquake deflections and pipe anchor stiffness coefficients. The deflections and pipe anchor stiffness coefficients. The EDS Job Numbers were 0170-007 for Unit 1 and 0171-008 for Unit 2. In general, we restricted our review to Unit 1 work, although some Unit 2 documentation was reviewed because it was filed with Unit 1 documentation.

Evaluation Criteria:

Our Quality Assurance Review of EDS used the applicable requirements of 10CFR50, Appendix B and Standard N45.2.11 as the Quality Assurance Criteria to be met. We evaluated the EDS Quality Assurance Manual used at the time of the contract and reviewed documentation and records to evaluate implementation compliance with the Quality Assurance Program.

Conclusions

On the basis of our review of the EDS Quality Assurance Manual, records and design documentation, we feel that EDS successfully implemented a Quality Assurance Program which met the applicable requirements of 10CFR50, Appendix B and ANSI N45.2.11. We have no Quality Assurance findings which require corrective action to be taken by EDS.

Method of Review

The method of review for EDS consisted of the following steps enumerated as (1) through (4) below:

(1) An introductory meeting was held with EDS Quality

Assurance personnel on December 22, 1981. The purpose of this meeting was to obtain some understanding of the EDS organization and the type of design services they perform. We also indicated the type of Quality Assurance review we would be making. Our questions during this meeting were based on a preliminary review of the EDS Quality Assurance Manual. Attachment A lists the EDS, PG&E and R. F. Reedy, Inc. personnel in attendance at all meetings with EDS.

(2) We reviewed the EDS Quality Assurance Manual, Revision 11, applicable to activities for contract 5-6-577. This review consisted of a comparison of the Program against the 10CFR50, Appendix B criteria requirements for (I) Organization; (II) Program; (III) Design Control; (V) Instructions, Procedures, and Drawings; (VI) Document Control; (VII) Corrective Action; and (XVIII) Audits. These criteria of Appendix B were selected as being applicable to a design organization such as EDS. The Program Review Checklist is included as Appendix B of this report. Where the Program Review Checklist indicates a programmatic omission or question the issue was included for consideration during the audit.

(3) Audit checklists responsive to the referenced Appendix B criteria and ANSI Standard N45.2.11, Section 6.3.1, were prepared. Criterion VI, Document Control, was not included because it was not directly appropriate to a historical audit to be performed. Document control was indirectly verified by review of documents and the other criteria. The Audit Checklist is included as Appendix C.

(4) The Quality Assurance audit of EDS was performed on January 5 and 6, 1982.

Five observations (which do not require corrective action) were noted as given in (a) through (e) below.

(a) We could not verify the existence of the "Design Review Criteria" used in accordance with QAP 3.7, paragraph 3.1 for the July 26, 1978 Design Review. Evidence exists that this procedure was followed, but the documentation from 1977 was not saved. Therefore it is not possible to directly verify that the "Design Review Criteria" document met all the EDS requirements for the July 26, 1978 Design Review.

(b) In many cases, "point of use" references were not made for equations in the calculation files. These

references were required by QAP 3.4, paragraph 3.2.1 of the present EDS Quality Assurance Manual.

(c) We could not verify that the Quality Assurance Manager concurred with the resolution of discrepancies as required by QAP 3.7, paragraph 3.5, because there were no sign-offs on the documentation.

(d) We were unable to verify that project personnel had read the project interface instructions as required, but did not find any interface problems of significance.

(e) Memoranda were used in lieu of technical instructions. This is not consistent with the EDS Quality Assurance Program.

The Program Review Checklist of Appendix B addresses a comparison of the Quality Assurance Manual and procedures with the requirements of 10CFR50, Appendix B. Where the checklist indicated a problem of the Manual or procedures meeting the requirements of 10CFR50, Appendix B, a further and more detailed investigation was addressed during the implementation review. No significant items of concern were found to exist. The observations listed above address all aspects of our complete review.

APPENDIX A

EDS ATTENDANCE LIST

Attendance

Name	Company	Introductory Meeting 12/22/81	Audit 1/5/82	Audit 1/6/82
R. Mayers	PG&E		x	x
F. Zerebinski	PG&E	x		
E. J. Hee	EDS			x
R. A. Hobgood	EDS			x
R. B. McKillop	EDS	x	x	
R. Polivka	EDS			x
R. A. Simanek	EDS	x	x	
D. Witt	EDS			x
W. S. Gibbons*	RFR, Inc.	x	x	x
P. J. Herbert	RFR, Inc.	x		
R. F. Petrokas	RFR, Inc.		x	x
R. F. Reedy	RFR, Inc.	x	x	x

*Lead Auditor

APPENDIX B

PROGRAM REVIEW CHECKLIST

[wrg]

R. F. REEDY, INC.

PROGRAM REVIEW CHECKLIST

ORGANIZATION: EDS Nuclear, Inc.

ADDRESS: _____

_____

QA PROGRAM REFERENCE: QA Manual, Rev. 11, 8/1/77

QA Manual, Rev. 15, 8/15/81

REVIEW CONDUCTED BY: [signature] DATE: 12/21/81

REVIEWED BY: [signature] DATE: 1/2/82

[signature] DATE: 1/2/82

[signature] DATE: 1/2/82

NO. OF PAGES: 20

PROGRAM REVIEW CHECKLIST

PROJECT: Diablo Canyon Subject: I Organization (App. B)

ITEM NO.	REQUIREMENT	PROGRAM AND PROCEDURE REFERENCES	YES	NO	N/A	REVIEW COMMENTS
1.	The applicant shall be responsible for the establishment and execution of the quality assurance program. The applicant may delegate to others, such as contractors, agents, or consultants, the work of establishing and executing the quality assurance program, or any part thereof, but shall retain responsibility therefor.	Policy Statement	x			President
2.	The authority and duties of persons and organizations performing activities affecting the safety-related functions of structures, systems, and components shall be clearly established and delineated in writing. These activities include both the performing functions of attaining quality objectives and the quality assurance functions. The quality assurance functions are those of (a) assuring that an appropriate quality assurance program is established and effectively executed and (b) verifying, such as by checking, auditing, and inspection, that activities affecting the safety-related functions have been correctly performed.	Policy Statement 1.0 2.0	x			QA Manager is responsible for QA Program. Corporate structure is defined.

PROGRAM REVIEW CHECKLIST

ROJECT: Diablo Canyon Subject: I Organization (App. B) Page 2 of 2

TEM NO.	REQUIREMENT	PROGRAM AND PROCEDURE REFERENCES	YES	NO	N/A	REVIEW COMMENTS
3.	The persons and organizations performing quality assurance functions shall have sufficient authority and organizational freedom to identify quality problems; to initiate, recommend, or provide solutions; and to verify implementation of solutions. Such persons and organizations performing quality assurance functions shall report to a management level such that this required authority and organizational freedom, including sufficient independence from cost and schedule when opposed to safety considerations, are provided.	2.0		x		QA Manager reports to Manager, Administrative Services. However, Project Engineers apparently report to the QA Manager for QA functions, but for hiring and salary purposes they report to a manager who is responsible for the work being audited or verified.
4.	...the individual(s) assigned the responsibility for assuring effective execution of any portion of the quality assurance program at any location where activities subject to this Appendix are being performed shall have direct access to such levels of management as may be necessary to perform this function.	2.0	x			Manager, Administrative Services reports directly to President, independent of engineering and projects groups.

PROGRAM REVIEW CHECKLIST

PROJECT: Diablo Canyon Subject: II Program (App. B) Page 1 of 3

ITEM NO.	REQUIREMENT	PROGRAM AND PROCEDURE REFERENCES	YES	NO	N/A	REVIEW COMMENTS
1.	The applicant shall establish at the earliest practicable time, consistent with the schedule for accomplishing the activities, a quality assurance program which complies with the requirements of this Appendix. This program shall be documented by written policies, procedures, or instructions, and shall be carried out throughout plant life in accordance with those policies, procedures, or instructions.	QA Plan	x			Earliest documented QA Manual date is 10/15/75
2.	The applicant shall identify the structures, systems, and components to be covered by the quality assurance program and the major organizations participating in the program, together with the designated functions of these organizations.	2.2	x			Contracted engineering work on a project basis.

PROGRAM REVIEW CHECKLIST

PROJECT: Diablo Canyon Subject: II Program (App. B)

ITEM NO.	REQUIREMENT	PROGRAM AND PROCEDURE REFERENCES	YES	NO	N/A	REVIEW COMMENTS
3.	The quality assurance program shall provide control over activities affecting the quality of the identified structures, systems, and components, to an extent consistent with their importance to safety.	2.2	x			Project structure is dependent on project requirements and QA controls required.
4.	Activities affecting quality shall be accomplished under suitably controlled conditions. Conditions include the use of appropriate equipment; suitable environmental conditions for accomplishing the activity, such as adequate cleanness; and assurance that all prerequisites for the given activity have been satisfied.				x	
5.	The program shall take into account the need for special controls, processes, test equipment, tools, and skills to attain the required quality, and the need for verification of quality by inspection and test.				x	

PROGRAM REVIEW CHECKLIST

PROJECT: Diablo Canyon Subject: II Program (App. B) Page 3 of 3

ITEM NO.	REQUIREMENT	PROGRAM AND PROCEDURE REFERENCES	YES	NO	N/A	REVIEW COMMENTS
6.	The program shall provide for indoctrination and training of personnel performing activities affecting quality as necessary to assure that suitable proficiency is achieved and maintained.	3.2 QAP-1.2 QAP-2.3	x			Performed by Manager of QA, responsible Project Engineer, Regional Office QA Coordinator.
7.	The applicant shall regularly review the status and adequacy of the quality assurance program. Management of other organizations participating in the quality assurance program shall regularly review the status and adequacy of that part of the quality assurance program which they are executing.	3.3	x			President conducts documented semi-annual management review meetings with Group and Division Managers to discuss audits and corrective action.

PROGRAM REVIEW CHECKLIST

PROJECT: Diablo Canyon Subject: III Design Control (App. B) Page 1 of 4

ITEM NO.	REQUIREMENT	PROGRAM AND PROCEDURE REFERENCES	YES	NO	N/A	REVIEW COMMENTS
1.	Measures shall be established to assure that applicable regulatory requirements and the design basis, as defined in Para. 50.2 and as specified in the license application, for those structures, sytems and components to which this Appendix applies are correctly translated into specifications, drawings, procedures, and instructions.	QAP-3.7		x		Addressed in design review, but not in design preparation. (8/15/81 revision has adequate controls.)
2.	These measures shall include provisions to assure that appropriate quality standards are specified and included in design documents and that deviations from such standards are controlled.	QAP-1.5 QAP-3.7		x		See item 1.

PROGRAM REVIEW CHECKLIST

PROJECT: Diablo Canyon Subject: III Design Control (App. B) Page 2 of 4

ITEM NO.	REQUIREMENT	PROGRAM AND PROCEDURE REFERENCES	YES	NO	N/A	REVIEW COMMENTS
3.	Measures shall also be established for the selection and review for suitability of application of materials, parts, equipment, and processes that are essential to the safety-related functions of the structures, systems, and components.	QAP-3.7		x		See item 1.
4.	Measures shall be established for the identification and control of design interfaces and for coordination among participating design organizations.	4.0 QAP-2.1 QAP-2.2	x			Controls well defined.
5.	These measures shall include the establishment of procedures among participating design organizations for the review, approval, release, distribution, and revision of documents involving design interfaces.	QAP-2.1 QAP-2.2	x			Controls well defined.

PROGRAM REVIEW CHECKLIST

PROJECT: Diablo Canyon Subject: III Design Control (App. B) Page 3 of 4

ITEM NO.	REQUIREMENT	PROGRAM AND PROCEDURE REFERENCES	YES	NO	N/A	REVIEW COMMENTS
6.	The design control measures shall provide for verifying or checking the adequacy of design, such as by the performance of design reviews, by the use of alternative or simplified calculational methods, or by the performance of a suitable testing program. The verifying or checking process shall be performed by individuals or groups other than those who performed the original design, but who may be from the same organization. Where a test program is used to verify the adequacy of a specific design feature in lieu of other verifying or checking processes, it shall include suitable qualifications testing of a prototype unit under the most adverse design conditions. Design control measures shall be applied to items such as the following: reactor physics, stress, thermal, hydraulic, and accident analyses; compatibility of materials; accessibility for inservice inspection, maintenance, and repair; and delineation of acceptance criteria for inspections and tests.	5.3 QAP-3.4 QAP-3.5 QAP-3.6 QAP-3.7	x			EDS - January 20, 1982 17/38

PROGRAM REVIEW CHECKLIST

PROJECT: Diablo Canyon Subject: III Design Control (App. B) Page 4 of 4

ITEM NO.	REQUIREMENT	PROGRAM AND PROCEDURE REFERENCES	YES	NO	N/A	REVIEW COMMENTS
7.	Design changes, including field changes, shall be subject to design control measures commensurate with those applied to the original design and be approved by the organization that performed the original design unless the applicant designates another responsible organization.	5.4 QAP-3.4 QAP-3.7		x		Changes are reviewed at discretion of Section Manager (QAP-3.7), Conflict exists between 5.4, Para 1.0 (c) and QAP-3.7, Para 3.6. Review of changes was deleted between 8/1/77and 3/7/80.

PROGRAM REVIEW CHECKLIST

PROJECT: Diablo Canyon Subject: IV Procurement Document Control (App. B) Page 1 of 1

ITEM NO.	REQUIREMENT	PROGRAM AND PROCEDURE REFERENCES	YES	NO	N/A	REVIEW COMMENTS
1.	Measures shall be established to assure that applicable regulatory requirements, design bases, and other requirements which are necessary to assure adequate quality are suitably included or referenced in documents for procurement of material, equipment, and services, whether purchased by the applicant or by its contractor or subcontractor.				x	No Procurement.
2.	To the extent necessary procurement documents shall require contractors or subcontractors to provide a quality assurance program consistent with the pertinent provisions of this Appendix.				x	No Procurement.

PROGRAM REVIEW CHECKLIST

PROJECT: Diablo Canyon Subject: V Instructions, Procedures, and Drawings (App. B) Page 1 of 1

ITEM NO.	REQUIREMENT	PROGRAM AND PROCEDURE REFERENCES	YES	NO	N/A	REVIEW COMMENTS
1.	Activities affecting quality shall be prescribed by documented instructions, procedures, or drawings of a type appropriate to the circumstances and shall be accomplished in accordance with these instructions, procedures, or drawings.	QAP-1.5 QAP-3.2 QAP-3.9	x			
2.	Instructions, procedures, or drawings shall include appropriate or qualitative acceptance criteria for determining that important activities have been satisfactorily accomplished.	5.1 QAP-3.9		x		Content of instructions and procedures is not clearly specified. (8/15/81 revision of QAP-3.9 contains necessary controls.)

PROGRAM REVIEW CHECKLIST

JECT: Diablo Canyon Subject: VI Document Control (App. B) Page 1 of 1

M	REQUIREMENT	PROGRAM AND PROCEDURE REFERENCES	YES	NO	N/A	REVIEW COMMENTS
	Measures shall be established to control the issuance of documents, such as instructions, procedures, and drawings, including changes thereto, which prescribe all activities, affecting quality.	3.1 4.2 QAP-1.1 QAP-2.1 QAP-2.2 QAP-3.1 QAP-3.2	x			Procedures are part of QAM.
	These measures shall assure that documents, including changes, are reviewed for adequacy and approved for release by authorized personnel, and are distributed to and used at the location where the prescribed activity is performed.	See 1 above	x			Controls are well defined.
	Changes to documents shall be reviewed and approved by the same organizations that performed the original review and approval unless the applicant designates another responsible organization.	3.1 QAP-1.1 QAP-2.1 QAP-3.2	x			

PROGRAM REVIEW CHECKLIST
VII Control of Purchased Material,
Equipment, and Services (App. B)

PROJECT: Diablo Canyon

Subject:

ITEM NO.	REQUIREMENT	PROGRAM AND PROCEDURE REFERENCES	YES	NO	N/A	REVIEW COMMENTS
1.	Measures shall be established to assure that purchased material, equipment, and services, whether purchased directly or through contractors and subcontractors, conform to the procurement documents.				x	No Procurement
2.	These measures shall include provisions, as appropriate, for source evaluation and selection, objective evidence of quality furnished by the contractor or subcontractor, inspection at the contractor or subcontractor source and examination of products upon delivery.				x	No Procurement

PROGRAM REVIEW CHECKLIST
VII Control of Purchased Material,
Equipment, and Services (App. B)

ROJECT: Diablo Canyon Subject:

ITEM NO.	REQUIREMENT	PROGRAM AND PROCEDURE REFERENCES	YES	NO	N/A	REVIEW COMMENTS
3.	Documentary evidence that material and equipment conform to the procurement requirements shall be available at the nuclear powerplant...prior to installation or use of such material and equipment. This documentary evidence shall be retained at the nuclear powerplant...and shall be sufficient to identify the specific requirements, such as codes, standards, or specifications, met by the purchased material and equipment.				x	No Procurement.
4.	The effectiveness of the control of quality by contractors shall be assessed by the applicant or designee at intervals consistent with the importance, complexity, and quantity of the product or services.				x	No Procurement.

PROGRAM REVIEW CHECKLIST

ROJECT: Diablo Canyon Subject: XVI Corrective Action (App. B) Page 1 of 2

TEM NO.	REQUIREMENT	PROGRAM AND PROCEDURE REFERENCES.	YES	NO	N/A	REVIEW COMMENTS
1.	Measures shall be established to assure that conditions adverse to quality, such as failures, malfunctions, deficiencies, deviations, defective material and equipment, and nonconformances are promptly identified and corrected.	3.4 QAP-3.6 QAP-3.7	x			Errors in designs and calculation are identified and corrected.
2.	In the case of significant conditions adverse to quality, the measures shall assure that the cause of the condition is determined, and corrective action taken to preclude repetition.	3.4 QAP-3.6 QAP-3.7 QAP-5.1	x			When trends are identified corrective action is taken.

PROGRAM REVIEW CHECKLIST

PROJECT: Diablo Canyon Subject: XVI Corrective Action (App. B) Page 2 of 2

ITEM NO.	REQUIREMENT	PROGRAM AND PROCEDURE REFERENCES	YES	NO	N/A	REVIEW COMMENTS
3.	The identification of the significant conditions adverse to quality, the cause of the condition, and the corrective action taken shall be documented and reported to appropriate levels of management.	3.3 3.4 QAP-3.6 QAP-3.7	x			Includes design and QA Program deficiencies.

PROGRAM REVIEW CHECKLIST

PROJECT: Diablo Canyon Subject: XVII Quality Assurance Records (App. B) Page 1 of 2

ITEM NO.	REQUIREMENT	PROGRAM AND PROCEDURE REFERENCES	YES	NO	N/A	REVIEW COMMENTS
1.	Sufficient records shall be maintained to furnish evidence of activities affecting quality.	6.1 QAP-4.1	x			
2.	The records shall include at least the following: Operating logs and the results of reviews, inspections, tests, audits, monitoring of work performance, and materials analyses. The records shall also include closely-related data such as qualifications of personnel, procedures, and equipment.	6.1 QAP-4.1	x			Includes design-related and progr related records.
3.	Inspection and test records shall, as a minimum, identify the inspector or data recorder, the type of observation, the results, the acceptability, and the action taken in connection with any deficiencies noted.				x	

PROGRAM REVIEW CHECKLIST

PROJECT: Diablo Canyon Subject: XVII Quality Assurance Records (App. B) Page 2 of 2

ITEM NO.	REQUIREMENT	PROGRAM AND PROCEDURE REFERENCES	YES	NO	N/A	REVIEW COMMENTS
4.	Records shall be identifiable and retrievable. Consistent with applicable regulatory requirements, the applicant shall establish requirements concerning record retention, such as duration, location, and assigned responsibility.	6.1 QAP-4.1 QAP-4.2	x			Regional offices under separate programs.

PROGRAM REVIEW CHECKLIST

OJECT: Diablo Canyon Subject: XVIII Audits (App. B) Page 1 of 2

EM O.	REQUIREMENT	PROGRAM AND PROCEDURE REFERENCES	YES	NO	N/A	REVIEW COMMENTS
1.	A comprehensive system of planned and periodic audits shall be carried out to verify compliance with all aspects of the quality assurance program and to determine the effectiveness of the program.	3.4 QAP-5.1	x			Annually
2.	The audits shall be performed in accordance with the written procedures or check lists by appropriately trained personnel not having direct responsibility in the areas being audited.	3.4 QAP-5.1 QAP-5.2	x			QA Manager prepares checklists; auditors trained and qualified; selected by QA Manager. Independence is stated in generalities.
3.	Audit results shall be documented and reviewed by management having responsibility in the area audited.	3.4 QAP-5.1	x			Post-audit meeting with Project Engineer and Section Manager to discuss preliminary report. Audit report is not required to be sent to management of area audited. (Report requirements are adequately described in 8/15/81 revision of QAP-5.1.)

PROGRAM REVIEW CHECKLIST

PROJECT: Diablo Canyon Subject: XVIII Audits (App. B) Page 2 of 2

ITEM NO.	REQUIREMENT	PROGRAM AND PROCEDURE REFERENCES	YES	NO	N/A	REVIEW COMMENTS
4.	Follow-up action, including reaudit of deficient areas, shall be taken where indicated.	3.4 QAP-5.1	x			Determined by QA Manager.

R. F. REEDY, INC.

AUDIT CHECKLIST

ORGANIZATION: EDS NUCLEAR, INC.

ADDRESS: 220 Montgomery Street

San Francisco, California 94104

QA PROGRAM REFERENCE: QA Manual, Rev. 11

8/1/77

AUDIT CONDUCTED BY: R. J. Petrosos DATE: 1/15/82

R. F. Reedy DATE: 1/15/82

W. S. Gibbons DATE: 1/15/82

REVIEWED BY: W. S. Gibbons DATE: 1/18/82

R. F. Reedy DATE: 1/18/82

P. J. Hurbert DATE: 1/18/82

NO. OF PAGES: 7

AUDIT CHECKLIST

Company EDS Nuclear, Inc. (Pre-June 1978)				Page 1 of 7
Applicable QAM Rev. 11, 8/1/77			Auditor (1), (2), (3), WSG	Date January 6, 1982
	App. B. Crit.	QAM Ref.	Statement	Audit Instruction	Comment
(1)	I.	2.0	EDS Nuclear performs contracted engineering work on a project basis, with the project structure and scope of work dependent on project requirements.	Verify project organization (and personnel by name) for PG&E contracts 17007 and 17008.	Reviewed Project QA File for contracts 0170-007/008 to establish personnel and project organization as an organization chart does not exist now. Names were cross-checked during the auditing of other elements to verify project organization existed and was acceptable.
(2)	I.	2.0 2.3 2.0 b. (p.8)	Manager, Administrative Services evaluates the effectiveness of the QA Program through reviews of internal audits, independent audits of the Quality Assurance Department, and management reviews of the Quality Assurance program.	Determine evidence of evaluations of effectiveness.	Verified with checklist items (3) and (8). The Manager of Administrative Services approved the internal audit reports (10/18/77 and 5/22/78) reviewed. Minutes of Management Reviews 7/16/76, 2/1/77, 7/15/77, 2/28/78, and Management Audit of 8/78, and, Management Review and Audit of 10/11/78 were reviewed to verify that evaluation of the effectiveness of the QA program had been performed.
(3)	I.	2.0 2.3 2.0 d. (p.9)	Manager of Quality Assurance reports regularly to the Manager, Administrative Services on the effectiveness of the Program, including internal and client audits. Selects qualified audit team personnel who have not participated in the activity to be audited. Convenes meetings of the Design Review Com-	Review audit team personnel. Verify independence of auditors from activity and auditor qualification and certification. (3) cont. next page	Reviewed qualifications for B. Phipps, auditor 11/3/75 and ATL 4/15/76, and P. Stordahl, auditor 5/10/78 and verified both qualification - certificatio and independence from work activities. Verified Design Review Committee meeting in minutes of 2/28/78 Management Review Meet-

AUDIT CHECKLIST

Company EDS Nuclear, Inc. (Pre-June 1978)				Page 2 of 7
Applicable QAM Rev. 11, 8/1/77			Auditor (3) WSG; (4) RFR	Date January 6, 1982
App. B. Crit.	QAM Ref.	Statement	Audit Instruction	Comment
(3) cont.		mittee as appropriate.		which discussed results of the design review committee meeting.
(4)	I/III	2.0 2.3 2.0 c.(p.11) 4.1 (QAP) (2.1)	Project Managers provide written interface instructions to project personnel.	(a) Verify existence of project interface instructions in accordance with QAP 2.1, Sec. 2.2 or 2.3, if applicable. (b) Are the instructions appropriate to the scope of work on contracts 17007 and 17008? (c) Review the instructions for conformance to QAP 2.1, Sec. 3.2 and 3.3. (d) Verify evidence of issuance to project personnel per QAP 2.1, Sec. 3.4. Review against project organization chart. (e) Review evidence of external interface control per QAP 2.1, Sec. 3.6	Two revisions of Interface Instructions were reviewed and documentary evidence existed concerning the distribution of the instructions. The instructions met the requirements of the referenced QA Procedures with the exception that copies were issued to the QA Manager and the project QA file instead of to all EDS personnel concerned with interfacing internally and with the client as required by QA Procedure 2.1, Sec. 3.4. However, evidence was reviewed showing that personnel working on the project were all indoctrinated with regard to the procedures and the procedures were available to everyone in the Project QA file. Therefore it was concluded the evidence demonstrated that the proper personnel were trained in the requirements of the Interface Instructions. External interface adequately controlled with transmittals. EDS - Jan. 20, 1982 .33/38

AUDIT CHECKLIST

Company EDS Nuclear, Inc. (Pre-June 1978)				Page 3 of 7
Applicable QAM Rev. 11, 8/1/77			Auditor (5) RFP; (6) WSG	Date January 6, 1982
	App. B. Crit.	QAM Ref.	Statement	Audit Instruction	Comment
(5)	I/III III	2.0 2.3 2.0 f.(p.11) 5.0 5.3 2.0 (QAP) (3.7) (QAP) (3.8)	Project Engineers schedule and supervise internal design reviews.	(a) Review evidence of design scheduled and supervised by Project Engineer. (b) Review design review evidence for complaicne to QAP 3.7 Sec. 3.0, particularly 3.1 for criteria, 3.3 for performance, and 3.6 for design changes. (c) Was QAP 3.8 applicable to referenced contracts? If so, review evidence for compliance to QAP 3.8, Sec. 3.0.	(a) Design Reviews were performe and documented. Design Review report dated 7/26/78 was determined to be applicable to the time period being audited. (b) Criteria required for item 3.1 were not documented. Evidence exists that this is curren done in Design Review plans, but EDS does not save old plans. Therefore, could not verify that criteria were documented prior t June 1978. Adequate documentation of perfor mance of Design Reviews exists in the Project QA File. Item 3.6 of QAP3.7 was found to be not applicable. (c) QAP 3.8 was not applicable.
(6)	II	3.1 3.1 2.0 (QAP) (1.1)	A receipt acknowledgement program serves to verify Manual distribution.	Verify distribution and receipt of Manual to appropriate personnel identified in (1), above - at least to Project Engineer.	Verified in QAM transmittal file for QAM Rev. 11. Audit 77024 (10/28/78) verified QAM #75 to E. J. Hee.

AUDIT CHECKLIST

Company EDS Nuclear, Inc. (Pre-June 1978)				Page 4 of 7
Applicable QAM Rev. 11, 8/1/77			Auditor (7); (8) WSG (9) RFP	Date January 6, 1982
App. B. Crit.	QAM Ref.	Statement	Audit Instruction	Comment
) II	3.0 3.2 2.0 (QAP) (2.3)	Project initiation and training is conducted by the responsible Project Engineer and includes a review of project QA requirements, document control procedures, interface controls and project technical requirements, and appropriate reading assignments.	Verify implementation of training of project personnel, in accordance with QAP 2.3, Sec. 3.1.1	Verified compliance in Project QA File by review of Project Initiation Checklists.
3) II	3.0 3.3 2.0 (QAP) (1.3)	The President conducts Management Review Meetings of the QA Program on a semi-annual basis.	Verify evidence of Management Review Meeting(s). Check QAP 1.3: Sec. 3.3, 3.4 and 3.5.	Verified compliance in conjunctio with this checklist item(2), abov
9) III	5.0 5.2	Design calculations 1.0 Requirements The following general requirements apply ---to--- version used:	(a) Select two calculations from calculation index QAP 3.4, Sec. 3.1.1 and review for overall compliance to QA Plan 5.2, 1.0 Requirements. (9) cont. next page	(a) Per 3.1.1 of QAP 3.4, calculation index is in the Project QA File ar appears to be complete. The follo ing calculation packages were reviewed: 1700007-14, 1700007-22 1700007-30, 1700007-36, 1700007-48 1700007-76, 1700007-257, 1700007-1138, 1700007-1153. The following calculation files were reviewed in less detail: 1700007-111, 1700007-020, 1700007-038. As a general comment, point of use reference to equations in the calculations was not done in many cases. QAP 3.4, Attachment "C" was found to be met by checking guidelines in Project Engineer eneral Instructions 1700007-01 and 1700008-01.

AUDIT CHECKLIST

Company EDS Nuclear, Inc. (Pre-June 1978)				Page 5 of 7.
Applicable QAM Rev. 11, 8/1/77			Auditor (9) RFP	Date January 6, 1982
App. B. Crit.	QAM Ref.	Statement	Audit Instruction	Comment
9) cont.		QAP 3.5	(b) Select one of each type of computer program (standard, special purpose, and foreign-ref. QAP 3.5, Sec. 3.1) if applicable to these contracts, and verify program (including revision) verification in accordance with QAP 3.5, Sec. 3.3.	(b) Programs EDSGAP, FORMAX, ANCHLD were used on the subject project. A summary of verification was found in the Project QA File. The following computer files were referenced as being verification runs for EDSGAP and ANCHLD: 1700007-01, 1700007-02, 1700007-03, 1700007-04. The subject computer runs were reviewed in the microfilm storage file and were found to be the applicable runs with the required signoffs and documentation.
		QAP's 3.1 and 3.2	(c) If feasible, select three drawings referenced in design calculations (9(a), above) and review for: (1) design documents used for design input (ref. QAP 3.1, Sec. 3.4 and QA Plans 5.1,2.0), (2) revision status (latest) per Drawing Log (ref. QAP 3.2, Sec. 3.2).	(c) Per R. A. Hobgood, QA Manager, EDS does not keep copies of client supplied drawings. Therefore, drawings listed in drawing log could not be pulled from the files. However, each calculation package has a copy of the design sketches applicable to the individual support. These are controlled as part of the design calculation package. This was judged to be satisfactory.

AUDIT CHECKLIST

Company EDS Nuclear, Inc. (Pre-June 1978)				Page 6 of 7
Applicable QAM Rev. 11, 8/1/77			Auditor (10), RFR (11), RFP	Date January 6, 1982
App. B. Crit.	QAM Ref.	Statement	Audit Instruction	Comment
10) V	QAP 3.9	QAP - 3.9, Paragraphs 2.2 and 3.2	Verify that the Project Engineer approved project instructions prepared as guidance for projects 17007 and 17008, if applicable.	The instructions for both Units, 1 and 2, were properly approved and issued by the Project Engineer E. J. Hee. The only observation was that memos were used to modify project instructions instead of the Technical Procedure Sheets required by the Quality Assurance Procedure. EDS had recognized this problem from previous audits and this practice is explicitly prohibited in the current issue of the EDS QA Program.
(11) XVI	QAP 3.7	The Section Manager shall review the design review documentation. As necessary, he shall prescribe corrective action for identified nonconformance.	Review final design review packages for evidence of conformance to QAP 3.7, Sec. 3.4.	The Design Review report dated 7/26/78 satisfies QAP 3.7 requirements. However, QA Manager signature as required by paragraph 3.4 was not found on the Design Review Report.

AUDIT CHECKLIST

Company EDS Nuclear, Inc. (Pre-June 1978)				Page 7 of 7
Applicable QAM Rev. 11, 8/1/77			Auditor (12) WSG	Date January 6, 1982
App. B. Crit.	QAM Ref.	Statement	Audit Instruction	Comment
(12) XVIII	3.0 3.4	The following major requirements apply to EDS Nuclear internal audits and any resulting corrective action: a. Audits shall be systematically scheduled and conducted by qualified personnel using written checklists. b. Audit personnel shall have no responsibilities in the areas audited. c. Identified discrepancies and their required corrective action shall be documented. d. Completion of corrective action shall be documented.	Select an audit performed on these contracts. Review for compliance to QAP-5.1 and QAP 5.2, particularly Sections 3.4, 3.5, 3.6, and 3.7 of QAP - 5.1, and Section 3.4 of QAP-5.2. Verify documentation of review of audit reports by management of area audited.	Reviewed audit files #77024 (10/18/77) and 780013 (5/22/78) for these contracts and verified compliance.

ATTACHMENT D

File No. 950

ERROR AND OPEN ITEM SHEET

1. Classification

☐ Error
or
☒ Open Item

Error Classification
☐ Class (A, B, C, or D)

2. Description

Valve FCV 95 was modified by DCO-G-M-876 (PGandE Design Change Order). The plates are shown on pages 8 and 9 of DCO-G-M-876 as ½ inch thick. RLCA field inspection showed the thickness to be 3/8 inches.

3. Significance

The significance of this item can be better assessed upon completion of the RLCA analysis and comparison with PGandE results.

4. Recommendation

A recommendation will be provided upon completion of the RLCA analysis

5. Reported

☒ PGandE Ref. & Date Transmittal of 1/29/82

☐ NRC Ref. & Date

6. Final Resolution

Edward Denison 1/28/82
Signed/Date

R L Oland 1/29/81
Project Engineer/Date
Prior to Release

Project Administrator/Date
Prior to Final Resolution

File No. 951

ERROR AND OPEN ITEM SHEET

1. Classification

[ ] Error
or
[x] Open Item

Error Classification
[ ] Class (A, B, C, or D)

2. Description Line 593 - 4 inches

Support 1/27R is shown on PGandE Design Review Isometric 445878 Revision 14 to be located 9 inches from the elbow. RLCA field inspection showed this support to be located 35 inches from the elbow.

3. Significance

The significance of this item can be better assessed upon completion of the RLCA analysis and comparison with PGandE results.

4. Recommendation

A recommendation will be provided upon completion of the RLCA analysis

5. Reported

[x] PGandE Ref. & Date Transmittal of 1/29/82

[ ] NRC Ref. & Date

6. Final Resolution

Edward Danison 1/29/82
Signed/Date

R L Cloud 1/29/81
Project Engineer/Date
Prior to Release

Project Administrator/Date

File No. 952

ERROR AND OPEN ITEM SHEET

1. Classification

☐ Error
or
☒ Open Item

Error Classification
☐ Class (A, B, C, or D)

2. Description Line 593 - 4 inches

The dimension between valve FCV 37 and support 3/27V is shown on PGandE Design Review Isometric 445878 Revision 14 to be 4 inches. RLCA field inspection showed this dimension to be 12 inches.

3. Significance

The significance of this item can be better assessed upon completion of the RLCA analysis and comparison with PGandE results.

4. Recommendation

A recommendation will be provided upon completion of the RLCA analysis.

5. Reported

☒ PGandE Ref. & Date Transmittal of 1/29/82

☐ NRC Ref. & Date

6. Final Resolution

Edward Domin 1/29/82
Signed/Date

R L Cloud 1/29/81
Project Engineer/Date
Prior to Release

Project Administrator/Date
Prior to Final Resolution

File No. 953

ERROR AND OPEN ITEM SHEET

1. Classification

☐ Error
or
☒ Open Item

Error Classification
☐ Class (A, B, C, or D)

2. Description Line 574 - 4 inches

Support 58S/69R is shown on PGandE Design Review Isometric 447119 Revision 12 to be active in the z and y directions. RLCA field inspection showed this support to be active in the x, y and z directions.

3. Significance

The significance of this item can be better assessed upon completion of the RLCA analysis and comparison with PGandE results.

4. Recommendation

A recommendation will be provided upon completion of the RLCA analysis

5. Reported

Transmittal of

☒ PGandE Ref. & Date 1/29/82

☐ NRC Ref. & Date

6. Final Resolution

Edward Demir 1/29/82
Signed/Date

R L Cloud 1/29/81
Project Engineer/Date
Prior to Release

Project Administrator/Date
Prior to Final Resolution

File No. 954

ERROR AND OPEN ITEM SHEET

1. Classification

☐ Error

or

☒ Open Item

Error Classification

☐ Class (A, B, C, or D)

2. Description Line 574 - 4 inches

Support 58S/56R is shown on PGandE Design Review Isometric 447119 Revision 12 to be located 5 feet, 2 inches from the elbow. RLCA field inspection showed this support to be located 7 feet, 8 inches from the elbow.

3. Significance

The significance of this item can be better assessed upon completion of the RLCA analysis and comparison with PGandE results.

4. Recommendation

A recommendation will be provided upon completion of the RLCA analysis

5. Reported

☒ PGandE Ref. & Date Transmittal of 1/29/82

☐ NRC Ref. & Date

6. Final Resolution

Edward Denin 1/29/82
Signed/Date

R L Cloud 1/29/81
Project Engineer/Date
Prior to Release

Project Administrator/Date
Prior to Final Resolution

File No. 955

ERROR AND OPEN ITEM SHEET

1. Classification

[ ] Error
or
[x] Open Item

Error Classification
[ ] Class (A, B, C, or D)

2. Description Line 574 - 4 inches

Two supports, both labeled 58S/57R, are shown on PGandE Design Review Isometric 447119 Revision 12. It is RLCA's understanding that PGandE's Unit I support nomenclature calls for unique support numbers at specific locations.

3. Significance

The significance of this item can be better assessed upon completion of the RLCA analysis and comparison with PGandE results.

4. Recommendation

A recommendation will be provided upon completion of the RLCA analysis

5. Reported

[x] PGandE Ref. & Date Transmittal of 1/29/82

[ ] NRC Ref. & Date

6. Final Resolution

Edward Dorin 1/29/82
Signed/Date

R L Cloud 1/29/81
Project Engineer/Date
Prior to Release

Project Administrator/Date
Prior to Final Resolution

File No. 956

ERROR AND OPEN ITEM SHEET

1. Classification

☐ Error

or

☒ Open Item

Error Classification

☐ Class (A, B, C, or D)

2. Description Line 574 - 4 inches

Support 58S/69R is shown on PGandE Design Review Isometric 447119 Revision 12 to be located 3 feet from the elbow. RLCA field inspection showed this support to be located 2 feet, 1 inch from the elbow.

3. Significance

The significance of this item can be better assessed upon completion of the RLCA analysis and comparison with PGandE results.

4. Recommendation

A recommendation will be provided upon completion of the RLCA analysis

5. Reported

☒ PGandE Ref. & Date Transmittal of 1/29/82

☐ NRC Ref. & Date

6. Final Resolution

Edward Domin 1/29/82
Signed/Date

R L Cloud 1/29/81
Project Engineer/Date
Prior to Release

Project Administrator/Date

File No. 957

ERROR AND OPEN ITEM SHEET

1. Classification

☐ Error

or

☒ Open Item

Error Classification

☐ Class (A, B, C, or D)

2. Description Lines 577 and 578, both 3 inches

Lines 577 and 578 are shown on PGandE Design Review Isometric 447119 Revision 12 to be insulated. RLCA field inspection showed these lines uninsulated.

3. Significance

The significance of this item can be better assessed upon completion of the RLCA analysis and comparison with PGandE results.

4. Recommendation

A recommendation will be provided upon completion of the RLCA analysis

5. Reported

☒ PGandE Ref. & Date Transmittal of 1/29/82

☐ NRC Ref. & Date

6. Final Resolution

Edward Dorsin 1/29/82
Signed/Date

R L Cloud 1/29/81
Project Engineer/Date
Prior to Release

Project Administrator/Date
Prior to Final Resolution

File No. 958

ERROR AND OPEN ITEM SHEET

1. Classification

[ ] Error
or
[X] Open Item

Error Classification
[ ] Class (A, B, C, or D)

2. Description Line 578 - 4 inches

Support 58S/55V is shown on PGandE Design Review Isometric 447119 Revision 12 to be located on the horizontal run of a pipe immediately above the tee. RLCA field inspection showed this support to be located 8 inches below the tee.

3. Significance

The location of support 58S/55V on the vertical run of pipe will not affect the analysis.

4. Recommendation

A recommendation will be provided upon completion of the RLCA analysis.

5. Reported

Transmittal of

[X] PGandE Ref. & Date 1/29/82

[ ] NRC Ref. & Date

6. Final Resolution

Edward Denison 1/29/82
Signed/Date

R L Cloud 1/29/81
Project Engineer/Date
Prior to Release

Project Administrator/Date
Prior to Final Resolution

File No. 959

ERROR AND OPEN ITEM SHEET

1. Classification

[ ] Error

or

[x] Open Item

Error Classification

[ ] Class (A, B, C, or D)

2. Description Line 20 - 8 inches

Support 11/49SL is shown on PGandE Design Review Isometric 445884 Revision 8 adjacent to the reducer at elevation 163 feet on line 20. RLCA field inspection showed the support to be located adjacent to the bend at elevation 155 feet.

3. Significance

The significance of this item can be better assessed upon completion of the RLCA analysis and comparison with PGandE results.

4. Recommendation

A recommendation will be provided upon completion of the RLCA analysis

5. Reported

[x] PGandE Ref. & Date Transmittal of 1/29/82

[ ] NRC Ref. & Date

6. Final Resolution

Edward Denisar 1/29/82
Signed/Date

R L Oloed 1/29/81
Project Engineer/Date
Prior to Release

Project Administrator/Date
Prior to Final Resolution

File No. 960

ERROR AND OPEN ITEM SHEET

1. Classification

[ ] Error

or

[x] Open Item

Error Classification

[ ] Class (A, B, C, or D)

2. Description Line 19 - 8 inches

The "as-built" elevation of the first 45-degree elbow above the header on line 19 is shown on PGandE Design Review Isometric 445884 Revision 8 as 166 feet 21 inches. RLCA field inspection showed the elevation to be 155 feet, 1 inch. The elevation shown on the isometric was changed from 155 feet, 1 inch to 166 feet, 21 inches.

3. Significance

The significance of this item can be better assessed upon completion of the RLCA analysis and comparison with PGandE results.

4. Recommendation

A recommendation will be provided upon completion of the RLCA analysis

5. Reported

[x] PGandE Ref. & Date Transmittal of 1/29/82

[ ] NRC Ref. & Date

6. Final Resolution

Edward Denin 1/29/82
Signed/Date

R L Oland 1/29/81
Project Engineer/Date
Prior to Release

Project Administrator/Date
Prior to Final Resolution

File No. 961

ERROR AND OPEN ITEM SHEET

1. Classification

☐ Error

or

☒ Open Item

Error Classification

☐ Class (A, B, C, or D)

2. Description Line 19 - 8 inches

Support 11/59 SL is shown to be active in the vertical direction on PGandE Design Review isometric 445884 Revision 8. RLCA field inspection showed two skewed snubbers 20 and 25 degrees respectively from vertical.

3. Significance

The significance of this item can be better assessed upon completion of the RLCA analysis and comparison with PGandE results.

4. Recommendation

A recommendation will be provided upon completion of the RLCA analysis

5. Reported

☒ PGandE Ref. & Date Transmittal of 1/29/82

☐ NRC Ref. & Date

6. Final Resolution

Edward Doran 1/29/82
Signed/Date

R L Cloud 1/29/81
Project Engineer/Date
Prior to Release

Project Administrator/Date
Prior to Final Resolution

File No. 962

ERROR AND OPEN ITEM SHEET

1. Classification

☐ Error

or

☒ Open Item

Error Classification

☐ Class (A, B, C, or D)

2. Description Line 21 - 8 inches

Support 48/44R is shown on PGandE Design Review Isometric 445884 Revision 8 to be active in the EW direction. RLCA field inspection showed this support to be active in both the EW and NS directions.

3. Significance

The significance of this item can be better assessed upon completion of the RLCA analysis and comparison with PGandE results.

4. Recommendation

A recommendation will be provided upon completion of the RLCA analysis

5. Reported

☒ PGandE Ref. & Date Transmittal of 1/29/82

☐ NRC Ref. & Date

6. Final Resolution

Edward Denison 1/29/82
Signed/Date

R L Cloud 1/29/81
Project Engineer/Date
Prior to Release

Project Administrator/Date

File No. 963

ERROR AND OPEN ITEM SHEET

1. Classification

[ ] Error

or

[x] Open Item

Error Classification

[ ] Class (A, B, C, or D)

2. Description Line 2519 - 8 inches

Support 58S/32R is shown on PGandE Design Review Isometric 446542 Revision 10 to be active in both the vertical and EW directions. RLCA field inspection showed a 1/4-inch gap in both directions of restraint.

3. Significance

The significance of this item can be better assessed upon completion of the RLCA analysis and comparison with PGandE results.

4. Recommendation

A recommendation will be provided upon completion of the RLCA analysis

5. Reported

[x] PGandE Ref. & Date Transmittal of 1/29/82

[ ] NRC Ref. & Date

6. Final Resolution

Edwood Dennis 1/29/82
Signed/Date

R. L. Cloud 1/29/81
Project Engineer/Date
Prior to Release

Project Administrator/Date

File No. 964

ERROR AND OPEN ITEM SHEET

1. Classification

☐ Error

or

☒ Open Item

Error Classification

☐ Class (A, B, C, or D)

2. Description Line 2519 - 8 inches

RLCA field inspection showed a NS rigid support on line 2519 to be located 3 feet, 10 inches from the elbow below elevation 100 feet. PGandE Design Review Isometric 446542 Revision 10 does not show this support.

3. Significance

The significance of this item can be better assessed upon completion of the RLCA analysis and comparison with PGandE results.

4. Recommendation

A recommendation will be provided upon completion of the RLCA analysis

5. Reported

☒ PGandE Ref. & Date Transmittal of 1/29/82

☐ NRC Ref. & Date

6. Final Resolution

Edward Danisa 1/29/82
Signed/Date

R L Cloud 1/29/81
Project Engineer/Date
Prior to Release

Project Administrator/Date
Prior to Final Resolution

File No. 965

ERROR AND OPEN ITEM SHEET

1. Classification

☐ Error

or

☒ Open Item

Error Classification

☐ Class (A, B, C, or D)

2. Description Line 2519 - 8 inches

The vertical spring hanger 55S/(Unreadable) is shown on PGandE Design Review Isometric 446542 Revision 10 to be located 7 feet, 10 3/4 inches from the elbow below elevation 100 feet. RLCA field inspection showed this support to be located 8 feet, 10 inches from the elbow.

3. Significance

The significance of this item can be better assessed upon completion of the RLCA analysis and comparison with PGandE results.

4. Recommendation

A recommendation will be provided upon completion of the RLCA analysis

5. Reported

☒ PGandE Ref. & Date Transmittal of 1/29/82

☐ NRC Ref. & Date

6. Final Resolution

Edward Denver 1/29/82
Signed/Date

R. L. Cloud 1/29/81
Project Engineer/Date
Prior to Release

Project Administrator/Date

File No. 966

ERROR AND OPEN ITEM SHEET

1. Classification

☐ Error

or

☒ Open Item

Error Classification

☐ Class (A, B, C, or D)

2. Description Line 2519 - 8 inches

Support 14/33SL is shown on PGandE Design Review Isometric 446542 Revision 10 to be located 7 feet, 10 3/4 inches from the elbow. RLCA field inspection showed this support to be located 4 feet, 5 inches from the elbow.

3. Significance

The significance of this item can be better assessed upon completion of the RLCA analysis and comparison with PGandE results.

4. Recommendation

A recommendation will be provided upon completion of the RLCA analysis.

5. Reported

☒ PGandE Ref. & Date Transmittal of 1/29/82

☐ NRC Ref. & Date

6. Final Resolution

Edward Denin 1/29/82
Signed/Date

R L Dlouid 1/29/81
Project Engineer/Date
Prior to Release

Project Administrator/Date
Prior to Final Resolution

File No. 968

QUALITY ASSURANCE - FINDINGS

1. Company

Harding Lawson Associates

2. Description

Harding Lawson Associates was not required by PGandE to implement a formal Quality Assurance Program for their activities prior to April 10, 1978.

3. Recommendation - Corrective Action

RLCA: Additional engineering verification

4. Reported

[X] PGandE — Transmittal Date 1/30/82

[ ] NRC — Ref. & Date

6. Final Resolution

Edward Dorin 1/30/82
Signed/Date

R. L. Cloud 1/30/82
Project Engineer/Date
Prior to Release

Project Administrator/Date
Prior to Final Resolution

File No. 989

QUALITY ASSURANCE - FINDINGS

1. Company

Harding Lawson Associates

2. Description

The Harding Lawson Associates Quality Assurance Program and operating procedures applicable to the activities performed prior to June 1978 did not prescribe adequate controls to comply with the applicable criteria requirements of 10CFR50, Appendix B.

3. Recommendation - Corrective Action

RLCA: Additional engineering verification

4. Reported

[X] PGandE — Transmittal Date 1/30/82

[ ] NRC — Ref. & Date

6. Final Resolution

Edward Domin 1/30/82
Signed/Date

R L Olsud 1/30/82
Project Engineer/Date
Prior to Release

Project Administrator/Date
Prior to Final Resolution

File No. 970

QUALITY ASSURANCE - FINDINGS

1. Company

Harding Lawson Associates

2. Description

The was not sufficient objective evidence available at Harding Lawson Associates to establish that a controlled system was in effect which could be accepted as equivalent to 10CFR50, Appendix B.

3. Recommendation - Corrective Action

RLCA: Additional engineering verification

4. Reported

[X] PGandE — Transmittal Date 1/30/82

[ ] NRC — Ref. & Date

6. Final Resolution

Edward Donin 1/30/82
Signed/Date

R P Cloud 1/20/82
Project Engineer/Date
Prior to Release

Project Administrator/Date
Prior to Final Resolution

File No. 971

QUALITY ASSURANCE - OBSERVATIONS

1. Company

EDS Nuclear Inc.

2. Description

The existence of the "Design Review Criteria" used in accordance with QAP 3.7, paragraph 3.1 could not be verified for the July 26, 1978 Design Review. Evidence exists that this procedure was followed, but the documentation from 1977 was not saved. Therefore it is not possible to directly verify that the "Design Review Criteria" document met all the EDS requirements for the July 26, 1978 Design Review.

3. Recommendation

No corrective action required.

4. Reported

[X] PGandE — Transmittal Date 1/30/82

[ ] NRC — Ref. & Date _____

6. Final Resolution

Edward Demin 1/30/82
Signed/Date

R L Cloud 1/30/82
Project Engineer/Date
Prior to Release

Project Administrator/Date
Prior to Final Resolution

File No. 972

QUALITY ASSURANCE - OBSERVATIONS

1. Company....

EDS Nuclear.

2. Description

In many cases, "point of use" references were not made for equations in the calculation files. These references were required by QAP 3.4, paragraph 3.2.1 of the present EDS Quality Assurance Manual.

3. Recommendation

No corrective action required.

4. Reported

[X] PGandE — Transmittal Date January 30, 1982

[ ] NRC — Ref. & Date _____

6. Final Resolution

Edward Denison 1/30/82
Signed/Date

R L Oberd 1/30/82
Project Engineer/Date
Prior to Release

_____
Project Administrator/Date
Prior to Final Resolution

File No. 973

QUALITY ASSURANCE - OBSERVATIONS

1. Company

EDS Nuclear Inc.

2. Description

It could not be verified that the Quality Assurance Manager concurred with the resolution of discrepancies as required by QAP 3.7, paragraph 3.5, because there were no sign-offs on the documentation.

3. Recommendation

No corrective action required.

4. Reported

[X] PGandE — Transmittal Date January 30, 1982

[ ] NRC — Ref. & Date

6. Final Resolution

Edward Denison 1/30/82
Signed/Date

R. L. Oland 1/30/82
Project Engineer/Date
Prior to Release

Project Administrator/Date
Prior to Final Resolution

File No. 974

QUALITY ASSURANCE - OBSERVATIONS

1. Company

EDS Nuclear

2. Description

It could not be verified that project personnel had read the project interface instructions as required, but no interface problems of significance were found.

3. Recommendation

No corrective action required.

4. Reported

[X] PGandE — Transmittal Date 1/30/82

[ ] NRC — Ref. & Date

6. Final Resolution

Edward Denn 1/30/82
Signed/Date

R. J. Olson 1/30/82
Project Engineer/Date
Prior to Release

Project Administrator/Date
Prior to Final Resolution

File No. 975

QUALITY ASSURANCE - OBSERVATIONS

1. Company

EDS Nuclear Inc.

2. Description

Memoranda were used in lieu of technical instructions. This is not consistent with the EDS Quality Assurance Program.

3. Recommendation

No corrective action required.

4. Reported

[X] PGandE — Transmittal Date 1/30/82

[ ] NRC — Ref. & Date

6. Final Resolution

Edward Dennis 1/30/82
Signed/Date

R P Olsud 1/30/82
Project Engineer/Date
Prior to Release

Project Administrator/Date
Prior to Final Resolution

File No. 976

ERROR AND OPEN ITEM SHEET

1. Classification

[ ] Error

or

[X] Open Item

Error Classification

[ ] Class (A, B, C, or D)

2. Description 3.2.3 Equipment

The Exterior Containment spectra were superseded by the URS/Blume report issued on June 5, 1977. However, no transmittal to Westinghouse of this spectra could be located in the PGandE files.

3. Significance

Noted in "Preliminary Report, Seismic Reverification Report, Seismic Reverification Program - November 12, 1981"

4. Recommendation

This will be specifically covered by RLCA in the current program.

5. Reported

[X] PGandE Transmittal Date 2/8/82

[X] NRC Ref. & Date See above

6. Final Resolution

Edward Donison 2/5/82
Signed/Date

R L Cloud 2/6/82
Project Engineer/Date
Prior to Release

Project Administrator/Date
Prior to Final Resolution

File No. 977

ERROR AND OPEN ITEM SHEET

1. Classification

☐ Error

or

☒ Open Item

Error Classification

☐ Class (A, B, C, or D)

2. Description 3.3.1.4.1 Containment Structure

Because of the recent developments in the annulus area, PGandE is presently re-evaluating the structural adequacy of the annulus.

3. Significance

Noted in "Preliminary Report, Seismic Reverification Report, Seismic Reverification Program - November 12, 1981"

4. Recommendation

This will be specifically addressed by PGandE and reviewed by RLCA.

5. Reported

☒ PGandE Transmittal Date 2/8/82

☒ NRC Ref. & Date See above

6. Final Resolution

Eduard Denison 2/5/82
Signed/Date

R L Cloud 2/8/82
Project Engineer/Date
Prior to Release

Project Administrator/Date

File No. 978

ERROR AND OPEN ITEM SHEET

1. Classification

[X] Error
or
[ ] Open Item

Error Classification
[A] Class (A, B, C, or D)

2. Description 3.3.1.4.2 Equipment: Regenerative Heat Exchangers

For the vertical direction, the W report states that two-thirds of the filtered horizontal spectrum was used in the analysis. However, the Hosgri report states that two-thirds of the unfiltered horizontal response spectra is to be used as the response spectra for the vertical direction (Reference 6, page 4-3). The vertical spectra input used by Westinghouse is in error.

3. Significance

Noted in "Preliminary Report, Seismic Reverification Report, Seismic Reverification Program - November 12, 1981"

4. Recommendation

This will be specifically addressed by PGandE and reviewed by RLCA.

5. Reported

[X] PGandE Transmittal Date 2/8/82

[X] NRC Ref. & Date See above

6. Final Resolution

Edward Denison 2/5/82
Signed/Date

R L Olsen 2/6/82
Project Engineer/Date
Prior to Release

Project Administrator/Date
Prior to Final Resolution

File No. 979

ERROR AND OPEN ITEM SHEET

1. Classification

☐ Error

or

☒ Open Item

Error Classification

☐ Class (A, B, C, or D)

2. Description 3.3.1.4.2 Equipment

Besides the equipment reviewed above, other equipment in the Containment Structure has not been reviewed for the current effort, but will be done in the Reverification Program.

3. Significance

Noted in "Preliminary Report, Seismic Reverification Report, Seismic Reverification Program - November 12, 1981"

4. Recommendation

This is being covered generically by RLCA in the current program.

5. Reported

☒ PGandE Transmittal Date 2/8/82

☒ NRC Ref. & Date See above

6. Final Resolution

Edward Denison 2/5/82
Signed/Date

R L Cloud 2/6/82
Project Engineer/Date
Prior to Release

Project Administrator/Date
Prior to Final Resolution

File No. 980

ERROR AND OPEN ITEM SHEET

1. Classification

[ ] Error
or
[X] Open Item

Error Classification
[ ] Class (A, B, C, or D).

2. Description 3.3.2.4.1 Intake Structure

The design review for the auxiliary saltwater pump compartments was dated September 1976 (Log 7). It was later qualified for Hosgri as a part of the Intake Structure. However, no formal documentation has been found to date.

3. Significance

Noted in "Preliminary Report, Seismic Reverification Report, Seismic Reverification Program - November 12, 1981"

4. Recommendation

This will be specifically addressed by PGandE and reviewed by RLCA.

5. Reported

[X] PGandE Transmittal Date 2/8/82

[X] NRC Ref. & Date See above

6. Final Resolution

Edward Donison 2/5/82
Signed/Date

R L Olsud 2/6/82
Project Engineer/Date
Prior to Release

Project Administrator/Date
Prior to Final Resolution

File No. 981

ERROR AND OPEN ITEM SHEET

1. Classification

☐ Error

or

☒ Open Item

Error Classification

☐ Class (A, B, C, or D)

2. Description 3.3.2.4.3 Buried Pipelines

The buried pipelines connecting the Intake Structure to the Turbine Building were qualified by PGandE with input from URS/Blume. PGandE's qualification work was independently checked by Harding-Lawson Associates, using input from URS/Blume (see Log 7). The input used in the above two studies will be verified in the overall reverification program.

3. Significance

Noted in "Preliminary Report, Seismic Reverification Report, Seismic Reverification Program - November 12, 1981"

4. Recommendation

This will be specifically covered by RLCA in the current program.

5. Reported

☒ PGandE Transmittal Date 2/8/82

☒ NRC Ref. & Date See above

6. Final Resolution

Edward Denison 2/5/82
Signed/Date

R L Cloud 2/6/82
Project Engineer/Date
Prior to Release

Project Administrator/Date
Prior to Final Resolution

File No. 982

ERROR AND OPEN ITEM SHEET

1. Classification

☐ Error
or
☒ Open Item

Error Classification
☐ Class (A, B, C, or D)

2. Description 3.3.3 Turbine Building

The detail transmittals themselves have not been reviewed. This will be a part of the overall reverification work.

3. Significance

Noted in "Preliminary Report, Seismic Reverification Report, Seismic Reverification Program - November 12, 1981"

4. Recommendation

The interface between Blume and PGandE is being covered by both the QA Review and the Auxiliary Building analysis.

5. Reported

☒ PGandE Transmittal Date 2/8/82

☒ NRC Ref. & Date See above

6. Final Resolution

Edward Demir 2/5/82
Signed/Date

R. L. Oland 2/6/82
Project Engineer/Date
Prior to Release

Project Administrator/Date
Prior to Final Resolution

File No. 983

ERROR AND OPEN ITEM SHEET

1. Classification

[X] Error

or

[ ] Open Item

Error Classification

[A] Class (A, B, C, or D)

2. Description 3.3.7.6 Electrical Raceways

In summary, nine of the twenty raceway support seismic calculations were found to have been done with inapplicable spectra.

3. Significance

Noted in "Preliminary Report, Seismic Reverification Report, Seismic Reverification Program - November 12, 1981".

4. Recommendation

This will be specifically covered by RLCA in the current program.

5. Reported

[X] PGandE Transmittal Date 2/8/82

[X] NRC Ref. & Date See above

6. Final Resolution

Edward Denise 2/5/82
Signed/Date

R. Oland 2/6/82
Project Engineer/Date
Prior to Release

Project Administrator/Date
Prior to Final Resolution

File No. 984

ERROR AND OPEN ITEM SHEET

1. Classification

☐ Error
or
☒ Open Item

Error Classification
☐ Class (A, B, C, or D)

2. Description 3.3.3. Turbine Building

The PGandE design review is presented in the report "Hosgri Design Verification - Turbine Building", February, 1980 (Log 7). Since the design review did not verify the interface procedures between URS/Blume, PGandE and the field (Figure 4-10-2, URS/Blume Report on Design Review, Log 7), these will be investigated in the overall reverification program.

3. Significance

Noted in "Preliminary Report, Seismic Reverification Report, Seismic Reverification Program - November 12, 1981"

4. Recommendation

The interface between Blume and PGandE is being covered by both the QA Review and the Auxiliary Building analysis.

5. Reported

☒ PGandE Transmittal Date 2/8/82

☒ NRC Ref. & Date See above

6. Final Resolution

Edward Denison 2/5/82
Signed/Date

R L Oland 2/6/82
Project Engineer/Date
Prior to Release

Project Administrator/Date
Prior to Final Resolution

File No. 985

ERROR AND OPEN ITEM SHEET

1. Classification

[ ] Error
or
[X] Open Item

Error Classification
[ ] Class (A, B, C, or D)

2. Description 3.3.4 Auxiliary/Fuel Handling Buildings
However, an examination of some telecon records (from 3/9/77 to 3/24/77, Log 1.4) kept in URS/Blume's file reveals that there was controversy of weights for the DDE model computed by PGandE in the E-W and N-S directions for all elevations except at El. 140. A difference of 35% in the weight at Elevation 140', computed by PGandE for the DDE model and URS/Blume's computation in March 1977 (Log 1.4) was also discussed. According to the PGandE responsible engineer, the weight controversy was resolved with URS/Blume. However, no documentation of resolution has been found to date.

3. Significance

Noted in "Preliminary Report, Seismic Reverification Report, Seismic Reverification Program - November 12, 1981"

4. Recommendation

This will be specifically covered by RLCA in the current program.

5. Reported

[X] PGandE Transmittal Date 2/8/82

[X] NRC Ref. & Date See above

6. Final Resolution

Edward Denison 2/5/82
Signed/Date

R L Olson 2/6/82
Project Engineer/Date
Prior to Release

Project Administrator/Date
Prior to Final Resolution

File No. 986

ERROR AND OPEN ITEM SHEET

1. Classification

[ ] Error
or
[X] Open Item

Error Classification
[ ] Class (A, B, C, or D)

2. Description 3.3.4 Auxiliary/Fuel Handling Buildings

Since the final vertical control room spectra are higher than the preliminary spectra, a detailed review of equipment qualification will be necessary in the overall reverification program to ensure that the equipment was conservatively qualified.

3. Significance

Noted in "Preliminary Report, Seismic Reverification Report, Seismic Reverification Program - November 12, 1981"

4. Recommendation

This is being covered generically by RLCA in the current program.

5. Reported

[X] PGandE Transmittal Date 2/8/82

[X] NRC Ref. & Date See above

6. Final Resolution

Edward Denison 2/5/82
Signed/Date

R L Olson 2/6/82
Project Engineer/Date
Prior to Release

Project Administrator/Date
Prior to Final Resolution

File No. 987

ERROR AND OPEN ITEM SHEET

1. Classification

☐ Error
or
☒ Open Item

Error Classification
☐ Class (A, B, C, or D)

2. Description 3.3.4 Auxiliary/Fuel Handling Buildings

No effort has been spent, because of time constraints, to spot-check the building qualification details. Because of the reported controversy of weights in the DDE model, a detailed review of the seismic analysis of the Auxiliary Building and its qualification should be performed in the overall reverification program.

3. Significance

Noted in "Preliminary Report, Seismic Reverification Report, Seismic Reverification Program - November 12, 1981"

4. Recommendation

This will be specifically covered by RLCA in the current program.

5. Reported

☒ PGandE Transmittal Date 2/8/82

☒ NRC Ref. & Date See above

6. Final Resolution

Edward Denis 2/5/82
Signed/Date

R. L. Cloud 2/6/82
Project Engineer/Date
Prior to Release

Project Administrator/Date
Prior to Final Resolution

File No. 988

ERROR AND OPEN ITEM SHEET

1. Classification

☐ Error

or

☒ Open Item

Error Classification

☐ Class (A, B, C, or D)

2. Description 3.3.5.2.3 Qualification of Intake Structure Crane

Checks are required to compare the "as-built" drawings to the drawings used in analysis. This will be addressed in the long term program.

3. Significance

Noted in "Preliminary Report, Seismic Reverification Report, Seismic Reverification Program - November 12, 1981"

4. Recommendation

This is being covered generically by RLCA in the current program.

5. Reported

☒ PGandE Transmittal Date 2/8/82

☒ NRC Ref. & Date See above

6. Final Resolution

Edward Demin 2/5/82
Signed/Date

R L Oloud 2/6/82
Project Engineer/Date
Prior to Release

Project Administrator/Date
Prior to Final Resolution

File No. 989

ERROR AND OPEN ITEM SHEET

1. Classification

[ ] Error
or
[X] Open Item

Error Classification
[ ] Class (A, B, C, or D)

2. Description 3.3.5.3.3 Qualification of Turbine Building Crane

However, checks need to be made to insure that modifications to construction drawings were properly implemented. This will be accomplished in the long term report by comparing the "as-built" drawings to those used in analysis.

3. Significance

Noted in "Preliminary Report, Seismic Reverification Report, Seismic Reverification Program - November 12, 1981"

4. Recommendation

This is being covered generically by RLCA in the current program.

5. Reported

[X] PGandE Transmittal Date 2/8/82

[X] NRC Ref. & Date See above

6. Final Resolution

Edward Denin 2/5/82
Signed/Date

R L Cloud 2/6/82
Project Engineer/Date
Prior to Release

Project Administrator/Date
Prior to Final Resolution

File No. 990

ERROR AND OPEN ITEM SHEET

1. Classification

☐ Error
or
☒ Open Item

Error Classification
☐ Class (A, B, C, or D)

2. Description 3.3.5.4 Fuel Handling Building Crane

Some checks need to be made in the overall reverification program to check the applicability of design information transmitted.

3. Significance

Noted in "Preliminary Report, Seismic Reverification Report, Seismic Reverification Program - November 12, 1981"

4. Recommendation

The Blume/PGandE interfaces are being covered by both the QA Review and the Seismic Design Chain.

5. Reported

☒ PGandE Transmittal Date 2/8/82

☒ NRC Ref. & Date See above

6. Final Resolution

Edward Derin 2/5/82
Signed/Date

R L Cloud 2/6/82
Project Engineer/Date
Prior to Release

Project Administrator/Date
Prior to Final Resolution

File No. 991

ERROR AND OPEN ITEM SHEET

1. Classification

☐ Error

or

☒ Open Item

Error Classification

☐ Class (A, B, C, or D)

2. Description 3.3.5.4.3 Qualification of Fuel-Handling Building Crane

In the scope of the overall reverification program some checks will be made to insure that these modifications were done.

3. Significance

Noted in "Preliminary Report, Seismic Reverification Report, Seismic Reverification Program - November 12, 1981"

4. Recommendation

This is being covered generically by RLCA in the current program.

5. Reported

☒ PGandE Transmittal Date 2/8/82

☒ NRC Ref. & Date See above

6. Final Resolution

Edward Denin 2/5/82
Signed/Date

R P Oloud 2/6/82
Project Engineer/Date
Prior to Release

Project Administrator/Date
Prior to Final Resolution

File No. 992

ERROR AND OPEN ITEM SHEET

1. Classification

☐ Error

or

☒ Open Item

Error Classification

☐ Class (A, B, C, or D)

2. Description 3.3.6 Outdoor Water Storage Tanks

The design information was found to be transmitted informally. Some checks are required in the overall reverification program to insure its accuracy.

3. Significance

Noted in "Preliminary Report, Seismic Reverification Report, Seismic Reverification Program - November 12, 1981"

4. Recommendation

The Blume/PGandE interfaces are being covered by both the QA Review and the Seismic Design Chain.

5. Reported

☒ PGandE Transmittal Date 2/8/82

☒ NRC Ref. & Date See above

6. Final Resolution

Edward Demin 2/5/82
Signed/Date

R L Cloud 2/6/82
Project Engineer/Date
Prior to Release

Project Administrator/Date

File No. 993

ERROR AND OPEN ITEM SHEET

1. Classification

☐ Error

or

☒ Open Item

Error Classification

☐ Class (A, B, C, or D)

2. Description 3.3.6 Outdoor Water Storage Tanks

Although a team effort existed between PGandE and URS/Blume in transmitting the design information, some checks need to be made to determine the accuracy of the information transferred. This task will be accomplished in the overall reverification program.

3. Significance

Noted in "Preliminary Report; Seismic Reverification Report, Seismic Reverification Program - November 12, 1981"

4. Recommendation

The Blume/PGandE interfaces are being covered by both the QA Review and the Seismic Design Chain.

5. Reported

☒ PGandE Transmittal Date 2/8/82

☒ NRC Ref. & Date See above

6. Final Resolution

Edward Dezin 2/5/82
Signed/Date

Project Engineer/Date
Prior to Release

Project Administrator/Date

File No. 994

ERROR AND OPEN ITEM SHEET

1. Classification

[ ] Error
or
[X] Open Item

Error Classification
[ ] Class (A, B, C, or D)

2. Description 3.3.7.1 Piping Systems

PGandE uses a formal design guide for the seismic factors which they transmit to the consultants. This will be a significant interface to examine in the overall reverification program.

3. Significance

Noted in "Preliminary Report, Seismic Reverification Report, Seismic Reverification Program - November 12, 1981"

4. Recommendation

This is being covered generically by RLCA in the current program.

5. Reported

[X] PGandE Transmittal Date 2/8/82

[X] NRC Ref. & Date See above

6. Final Resolution

Edward Domin 2/5/82
Signed/Date

P L Olsen 2/6/82
Project Engineer/Date
Prior to Release

Project Administrator/Date
Prior to Final Resolution

ERROR AND OPEN ITEM SHEET

1. Classification

☐ Error
or
☒ Open Item

Error Classification
☐ Class (A, B, C, or D)

2. Description 3.3.7.1 Piping Systems

The transmittals for piping analyses appear to be in complete form for documents sent to EES. The only problem is that the transmittal cover sheet does not list the contents of the entire attachment. The transmittal might only read problem number and "appropriate spectra attached". To trace the flow of information it will be necessary to find the contents of the transmittals. This task will be accomplished by further examination of PGandE files or perhaps by examining EES files during the overall reverification program.

3. Significance

Noted in "Preliminary Report, Seismic Reverification Report, Seismic Reverification Program - November 12, 1981"

4. Recommendation

This is being covered generically by RLCA in the current program.

5. Reported

☒ PGandE Transmittal Date 2/8/82

☒ NRC Ref. & Date See above

6. Final Resolution

Edward Demin 2/5/82
Signed/Date

R L Oloud 2/6/82
Project Engineer/Date
Prior to Release

Project Administrator/Date
Prior to Final Resolution

File No. 996

ERROR AND OPEN ITEM SHEET

1. Classification

[ ] Error
or
[X] Open Item

Error Classification
[ ] Class (A, B, C, or D)

2. Description 3.3.7.1 Piping Systems
For the scope of piping assigned to URS/Blume, very little correspondence was located during the time frame of Unit 1 piping analyses. However, URS/Blume has not yet been contacted to provide any transmittals they may have sent or received. This will be accomplished during the long term reverification effort.

3. Significance

Noted in "Preliminary Report, Seismic Reverification Report, Seismic Reverification Program - November 12, 1981"

4. Recommendation

The Blume/PGandE interfaces are being covered by both the QA Review and the Seismic Design Chain.

5. Reported

[X] PGandE Transmittal Date 2/8/82

[X] NRC Ref. & Date See above

6. Final Resolution

Edward Denin 2/5/82
Signed/Date

R. L. Olsen 2/6/82
Project Engineer/Date
Prior to Release

Project Administrator/Date
Prior to Final Resolution

File No. 997

ERROR AND OPEN ITEM SHEET

1. Classification

[ ] Error
or
[X] Open Item

Error Classification
[ ] Class (A, B, C, or D)

2. Description 3.3.7.2 Valves
No documentation has been found concerning transmittals of information from PGandE to EES at this point in time. A search for this documentation is being continued.
Some records of EES transmittals to PGandE have been found to date. A complete set of EES transmittals to PGandE has not been compiled yet.

3. Significance

Noted in "Preliminary Report, Seismic Reverification Report, Seismic Reverification Program - November 12, 1981"

4. Recommendation

This is being covered generically by RLCA in the current program.

5. Reported

[X] PGandE Transmittal Date 2/8/82

[X] NRC Ref. & Date See above

6. Final Resolution

Edward Denin 2/5/82
Signed/Date

R L Olsen 2/6/82
Project Engineer/Date
Prior to Release

Project Administrator/Date
Prior to Final Resolution

File No. 998

ERROR AND OPEN ITEM SHEET

1. Classification

[ ] Error
or
[X] Open Item

Error Classification
[ ] Class (A, B, C, or D)

2. Description 3.3.7.2 Valves

A limited amount of documentation of information transferred from PGandE to EDS has been found to date. Complete documentation of requalification information for the valves being reviewed here has not been compiled at this point in time.

3. Significance

Noted in "Preliminary Report, Seismic Reverification Report, Seismic Reverification Program - November 12, 1981"

4. Recommendation

This is being covered generically by RLCA in the current program.

5. Reported

[X] PGandE Transmittal Date 2/8/82

[X] NRC Ref. & Date See above

6. Final Resolution

Edward Denin 2/5/82
Signed/Date

R L Olsud 2/6/82
Project Engineer/Date
Prior to Release

Project Administrator/Date

File No. 999

ERROR AND OPEN ITEM SHEET

1. Classification

[ ] Error
or
[X] Open Item

Error Classification
[ ] Class (A, B, C, or D)

2. Description 3.3.7.2 Valves

Some records of results sent by EDS to PGandE have been located. A complete set of EDS transmittals to PGandE for the valves being reviewed has not been compiled as of this date. The documentation of information transferred will be further addressed in the long term reverification program. Copies of transmittals identified thus far are located in Log 3.2.2.

3. Significance

Noted in "Preliminary Report, Seismic Reverification Report, Seismic Reverification Program - November 12, 1981"

4. Recommendation

This is being covered generically by RLCA in the current program.

5. Reported

[X] PGandE Transmittal Date 2/8/82

[X] NRC Ref. & Date See above

6. Final Resolution

Edward Demin 2/5/82
Signed/Date

R. L. Oland 2/6/82
Project Engineer/Date
Prior to Release

Project Administrator/Date
Prior to Final Resolution

File No. 1000

ERROR AND OPEN ITEM SHEET

1. Classification

[ ] Error
or
[X] Open Item

Error Classification
[ ] Class (A, B, C, or D)

2. Description 3.3.7.2 Valves

Some information on PGandE transmittals to Westinghouse has been located in PGandE files. However, insufficient records have been found to fully document information flow from PGandE to Westinghouse.

3. Significance

Noted in "Preliminary Report, Seismic Reverification Report, Seismic Reverification Program - November 12, 1981"

4. Recommendation

This is being covered generically by RLCA in the current program.

5. Reported

[X] PGandE Transmittal Date 2/8/82

[X] NRC Ref. & Date See above

6. Final Resolution

Edward Demin 2/5/82
Signed/Date

R. P. Cloud 2/6/82
Project Engineer/Date
Prior to Release

Project Administrator/Date
Prior to Final Resolution

ERROR AND OPEN ITEM SHEET File No. 1001

1. Classification

☐ Error

or

☒ Open Item

Error Classification

☐ Class (A, B, C, or D)

2. Description 3.3.7.2 Valves With the documentation available to date, no evidence was found to indicate whether the valve accelerations have ever been verified as being correct before being transmitted to the valve qualifiers. To perform a thorough review of the information transferred across interfaces, the following procedure will be followed on a sampling basis: 1) Locate and examine documentation of correct Hosgri spectra transmitted to piping analysts; 2) Locate and review transmittals of piping analysis results to PGandE, particularly valve accelerations. The accuracy of the piping model is also to be checked; 3) Locate and review transmittals of valve accelerations from PGandE to valve testing organizations; 4) Cross check data returned to PGandE from piping analysts with data transmitted out of PGandE to the valve testing organizations.

3. Significance

Noted in "Preliminary Report, Seismic Reverification Report, Seismic Reverification Program - November 12, 1981"

4. Recommendation

This is being covered generically by RLCA in the current program.

5. Reported

☒ PGandE Transmittal Date 2/8/82

☒ NRC Ref. & Date See above

6. Final Resolution

Edward Denison 2/5/82
Signed/Date

R L Cloud 2/6/82
Project Engineer/Date
Prior to Release

Project Administrator/Date
Prior to Final Resolution

ERROR AND OPEN ITEM SHEET

1. Classification

[X] Error
or
[ ] Open Item

Error Classification
[B] Class (A, B, C, or D)

2. Description 3.3.7.3 HVAC Components

However, calculations for supply fans S67, 68, and 69 were found to have used incorrect and unconservative seismic inputs... In addition, the forced draft shutter damper qualification showed incorrect seismic definition because gravity had not been added to the vertical acceleration (Log 3.3.1).

3. Significance

Noted in "Preliminary Report, Seismic Reverification Report, Seismic Reverification Program - November 12, 1981"

4. Recommendation

This will be specifically addressed by PGandE and reviewed by RLCA.

5. Reported

[X] PGandE Transmittal Date 2/8/82

[X] NRC Ref. & Date See above

6. Final Resolution

Edward Denin 2/5/82
Signed/Date

R L Olson 2/6/82
Project Engineer/Date
Prior to Release

Project Administrator/Date
Prior to Final Resolution

File No. 1003

ERROR AND OPEN ITEM SHEET

1. Classification

[ ] Error
or
[X] Open Item

Error Classification
[ ] Class (A, B, C, or D)

2. Description 3.3.7.4 HVAC Ducting

Hosgri duct support qualifications for the 4KV Switchgear Room HV System have not been located as of October 28, 1981. This is the only HVAC System required for cold shutdown in the Turbine Building. The reverification program will address this area further.

3. Significance

Noted in "Preliminary Report, Seismic Reverification Report, Seismic Reverification Program - November 12, 1981"

4. Recommendation

This will be specifically addressed by PGandE and reviewed by RLCA.

5. Reported

[X] PGandE Transmittal Date 2/8/82

[X] NRC Ref. & Date See above

6. Final Resolution

Edward Denison 2/5/82
Signed/Date

R. L. Olson 2/6/82
Project Engineer/Date
Prior to Release

Project Administrator/Date

File No. 1004

ERROR AND OPEN ITEM SHEET

1. Classification

☐ Error

or

☒ Open Item

Error Classification

☐ Class (A, B, C, or D)

2. Description 3.3.7.5 Electrical Equipment and Instrumentation

Documentation of one transmittal of seismic information from PGandE to Westinghouse has been found to date (PGandE Project Letter 1962). However, this transmittal contains only the Newmark earthquake acceleration time histories for the Containment interior at certain elevations.

3. Significance

Noted in "Preliminary Report, Seismic Reverification Report, Seismic Reverification Program - November 12, 1981"

4. Recommendation

This will be specifically covered by RLCA in the current program.

5. Reported

☒ PGandE Transmittal Date 2/8/82

☒ NRC Ref. & Date See above

6. Final Resolution

Edward Tenison 2/6/82
Signed/Date

R L Olson 2/6/82
Project Engineer/Date
Prior to Release

Project Administrator/Date
Prior to Final Resolution

ERROR AND OPEN ITEM SHEET

File No. 1005

1. Classification

☐ Error

or

☒ Open Item

Error Classification

☐ Class (A, B, C, or D)

2. Description 3.3.7.5 Electrical Equipment and Instrumentation

No documentation has been found to date regarding formal transmittals of spectra from PGandE to Wyle Labs.

3. Significance

Noted in "Preliminary Report, Seismic Reverification Report, Seismic Reverification Program - November 12, 1981"

4. Recommendation

This is being covered generically by RLCA in the current program.

5. Reported

☒ PGandE Transmittal Date 2/8/82

☒ NRC Ref. & Date See above

6. Final Resolution

Edward Denison 2/5/82
Signed/Date

R L Wood 2/6/82
Project Engineer/Date
Prior to Release

Project Administrator/Date
Prior to Final Resolution

ERROR AND OPEN ITEM SHEET

File No. 1006

1. Classification

☐ Error

or

☒ Open Item

Error Classification

☐ Class (A, B, C, or D)

2. Description 3.3.7.5 Electrical Equipment and Instrumentation

For equipment requalified by analysis, as indicated by note 5 in Table 10-1 of the Hosgri report, no information has been found to date as to who had performed these analyses. Investigation in this area will be continued.

3. Significance

Noted in "Preliminary Report, Seismic Reverification Report, Seismic Reverification Program - November 12, 1981".

4. Recommendation

This is being covered generically by RLCA in the current program.

5. Reported

☒ PGandE Transmittal Date 2/8/82

☒ NRC Ref. & Date See above

6. Final Resolution

Edward Denison 2/5/82
Signed/Date

R L Cloud 2/6/82
Project Engineer/Date
Prior to Release

Project Administrator/Date
Prior to Final Resolution

ERROR AND OPEN ITEM SHEET

File No. 1007

1. Classification

☐ Error

or

☒ Open Item

Error Classification

☐ Class (A, B, C, or D)

2. Description

3.3.7.5 Electrical Equipment and Instrumentation

Should further investigation fail to uncover records that unsatisfactorily document the transfer of seismic requalification information between PGandE and their consultants, the following procedure will be undertaken: 1) Actual test spectra used in requalification tests will be examined. They will be checked to see if they envelope the applicable Hosgri spectra; 2) Requalification analyses will be examined to check if the applicable seismic information was applied. In addition, the analysis criteria used for qualification, if applicable, will be examined.

3. Significance

Noted in "Preliminary Report, Seismic Reverification Report, Seismic Reverification Program - November 12, 1981"

4. Recommendation

This is being covered generically by RLCA in the current program.

5. Reported

☒ PGandE Transmittal Date 2/8/82

☒ NRC Ref. & Date See above

6. Final Resolution

Edward Denison 2/5/82
Signed/Date

R L Cloud 2/6/82
Project Engineer/Date
Prior to Release

Project Administrator/Date
Prior to Final Resolution

File No. 1008

ERROR AND OPEN ITEM SHEET

1. Classification

[ ] Error
or
[X] Open Item

Error Classification
[ ] Class (A, B, C, or D)

2. Description

Main Annunciator Cabinet

The Hosgri spectra referenced in the PGandE analysis, drawing DC 663101-75-1, are preliminary spectra (April 4, 1977).

3. Significance

RLCA is comparing the April 4, 1977, spectra against the Hosgri spectra to better assess the significance. In addition the question of control of design spectra will be addressed.

4. Recommendation

A recommendation will be provided upon completion of the spectra comparison and completion of the QA Audit of PGandE internal interfaces.

5. Reported

[X] PGandE Transmittal Date 2-9-82

[ ] NRC Ref. & Date _____

6. Final Resolution

Signed/Date 2/9/82

Edward Denison 2/9/82
Project Engineer/Date
Prior to Release

Project Administrator/Date
Prior to Final Resolution.

File No. 1009

ERROR AND OPEN ITEM SHEET

1. Classification

☐ Error
or
☒ Open Item

Error Classification
☐ Class (A, B, C, or D)

2. Description

Spectra have not been provided or scaling criteria defined for support locations above elevation 140' for the Containment Interior.

3. Significance

The use of elevation 140' spectra to represent response at higher elevation support locations may not be conservative.

4. Recommendation

Two methods are available for resolution. Generate Containment Interior spectra at the support locations above elevation 140'. Define a scaling criteria to account for the change in response between elevation 140' and the higher elevation support locations.

5. Reported

☒ PGandE Transmittal Date 2-9-82

☐ NRC Ref. & Date

6. Final Resolution

Paul H. Anderson / 2-9-82
Signed/Date

Edward Denison 2/9/82
Project Engineer/Date
Prior to Release

Project Administrator/Date
Prior to Final Resolution

File No. 1010

ERROR AND OPEN ITEM SHEET

1. Classification

☐ Error

or

☒ Open Item

Error Classification

☐ Class (A, B, C, or D)

2. Description

Spectra have not been provided or scaling criteria defined for support locations above elevation 140' for the Turbine Building.

3. Significance

The use of elevation 140' spectra to represent response at higher elevation support locations may not be conservative.

4. Recommendation

Two methods are available for resolution. Generate Turbine Building spectra at the support locations above elevation 140'. Define a scaling criteria to account for the change in response between elevation 140' and the higher elevation support locations.

5. Reported

☒ PGandE Transmittal Date 2-9-82

☐ NRC Ref. & Date

6. Final Resolution

Paul H. Anderson / 2-9-82
Signed/Date

Edward Jensen 2/9/82
Project Engineer/Date
Prior to Release

Project Administrator/Date
Prior to Final Resolution

File No. 1011

ERROR AND OPEN ITEM SHEET

1. Classification

☐ Error
or
☒ Open Item

Error Classification
☐ Class (A, B, C, or D)

2. Description

Diesel Generator Oil Priming Tank

The Hosgri spectra attached to the PGandE analysis (File 129.10, Revision 0, 12/27/77) are preliminary spectra.

3. Significance

The preliminary spectra are identical to those in the Hosgri Report and therefore the results of the calculation are valid. The question of control of design spectra will be addressed.

4. Recommendation

A recommendation will be provided upon completion of the QA Audit of PGandE internal interfaces.

5. Reported

☒ PGandE — Ref. & Date 2-9-82

☐ NRC — Ref. & Date

6. Final Resolution

Hanker Tsoy 2/9/82
Signed/Date

Edward Denver 2/9/82
Project Engineer/Date
Prior to Release

Project Administrator/Date
Prior to Final Resolution

File No. 1012

ERROR AND OPEN ITEM SHEET

1. Classification

☐ Error
or
☒ Open Item

Error Classification
☐ Class (A, B, C, or D)

2. Description

Diesel Generator Oil Priming Tank

The RLCA calculated results differ from the PGandE calculated results by more than 15%. (File 129.10, Revision 0, 12/27/77)

3. Significance

The differences in results identified above are not significant for this analysis. Governing stress for both PGandE and RLCA analyses are less than half allowable values. Differences greater than 15% are mainly related to the difference in analysis methods; Computer (PGandE) and Manual Calculations (RLCA). Other differences are identified in EOI 1011, 1015 and 1017.

4. Recommendation

No action required.

5. Reported

☒ PGandE Transmittal Date 2/9/82

☐ NRC Ref. & Date

6. Final Resolution

The 15% criteria is not meaningful in this case because different analysis techniques were employed and the results are less than half of the allowable. Therefore this item is closed and no action is required.

Signed/Date 2/9/82

Edward Denison 2/9/82
Project Engineer/Date
Prior to Release

Edward Denison 2/9/82
Project Administrator/Date
Prior to Final Resolution

File No. 1013

ERROR AND OPEN ITEM SHEET

1. Classification

☐ Error

or

☒ Open Item

Error Classification

☐ Class (A, B, C, or D)

2. Description

The test reponse spectra (Wyle Report 58255) used to qualify the Group VI Electrical Equipment did not envelope the required Hosgri response spectra (Figures 4-219 and 4-228).

3. Significance

Under the current requirements (present Hosgri spectra and NUREGs 1.100 and 1.89) this equipment is not qualified.

4. Recommendation

PGandE:

Either retest the Group VI Electrical Equipment to the required Hosgri response spectra or show that the current spectra is conservative.

5. Reported

☒ PGandE Transmittal Date 2-9-82

☐ NRC Ref. & Date

6. Final Resolution

Signed/Date 2/9/82

Edward Denison 2/9/82
Project Engineer/Date
Prior to Release

Project Administrator/Date
Prior to Final Resolution

File No. 1014

ERROR AND OPEN ITEM SHEET

1. Classification

[ ] Error
or
[X] Open Item

Error Classification
[ ] Class (A, B, C, or D)

2. Description

Spectra have not been provided or scaling criteria defined for the pipe rack attached to the Containment Exterior.

3. Significance

The use of Containment Exterior spectra to represent response on the pipe rack may not be conservative.

4. Recommendation

Two methods are available for resolution. Generate spectra for the pipe rack. Define a scaling criteria to account for the increased torsion arm and the coupled steel frame/Containment Exterior response.

5. Reported

[X] PGandE Transmittal Date 2-9-82

[ ] NRC Ref. & Date _____

6. Final Resolution

Paul H. Anderson / 2-9-82
Signed/Date

Edward Denison 2/9/82
Project Engineer/Date
Prior to Release

_____
Project Administrator/Date
Prior to Final Resolution

File No. 1015

ERROR AND OPEN ITEM SHEET

1. Classification

[x] Error
or
[ ] Open Item

Error Classification
[c] Class (A, B, C, or D)

2. Description

Diesel Generator Oil Priming Tank

The PGandE qualification analysis (File 129.10, Revision 0, 12/27/77) specified 4% damping. Regulatory Guide 1.61 specifies 3% damping for equipment.

3. Significance

The calcluated PGandE results are less than half of the allowable. RLCA examination showed only a slight change in the PGandE results with revised damping value.

4. Recommendation

A recommendation will be provided upon completion of the independent calculations for the generic equipment sample.

5. Reported

[x] PGandE Transmittal Date 2/11/82

[ ] NRC Ref. & Date

6. Final Resolution

Signed/Date 2/4/82

Edward Denison 2/11/82
Project Engineer/Date
Prior to Release

Project Administrator/Date
Prior to Final Resolution

File No. 1016

ERROR AND OPEN ITEM SHEET

1. Classification

[ ] Error
or
[X] Open Item

Error Classification
[ ] Class (A, B, C, or D)

2. Description

The anchor allowables on PGandE drawing 054162 Revision 3 do not agree with those on DCM-M9, Appendix C, Revision 7.

3. Significance

The correct design criteria for anchor bolts cannot be determined.

4. Recommendation

PGandE to address the differences between the two standards.

5. Reported

[X] PGandE Transmittal Date 2/11/82

[ ] NRC Ref. & Date

6. Final Resolution

Signed/Date 2/11/82

Edward Donison 2/11/82
Project Engineer/Date
Prior to Release

Project Administrator/Date
Prior to Final Resolution

File No. 1017

ERROR AND OPEN ITEM SHEET

1. Classification

[X] Error
or
[ ] Open Item

Error Classification
[C] Class (A, B, C, or D)

2. Description

Diesel Generator Oil Priming Tank

The weight of the sight-glass level indicator (on the priming tank) as used in the PGandE analysis is incorrect and is less than the actual weight. (File 129.10, Revision 0, 12/27/77)

3. Significance

The calculated PGandE results are less than half the allowable. RLCA examination shows an insignificant change in the PGandE results with the revised value.

4. Recommendation

A recommendation will be provided upon completion of the independent calculations for the generic equipment sample.

5. Reported

[X] PGandE Transmittal Date 2/11/82

[ ] NRC Ref. & Date

6. Final Resolution

Signed/Date 2/4/82

Edward Denson 2/11/82
Project Engineer/Date
Prior to Release

Project Administrator/Date
Prior to Final Resolution

PACIFIC GAS AND ELECTRIC COMPANY

SEMI-MONTHLY STATUS REPORT

DIABLO CANYON SEISMIC REVIEW PROGRAM

JANUARY 25, 1982

Summary

This report summarizes the progress of our seismic review program from January 7, 1982 through the close of business on Wednesday, January 20, 1982.

The piping support review and redesign and the conduit support review are scheduled to be complete by January 25, 1982 and January 31, 1982, respectively for the annulus area spectra revisions.

The status of our investigation into the Error and Open Items (EOI's) issued by R. L. Cloud Associates, Inc. (RLCA) is included.

We have reviewed the attached progress report from RLCA. He reports that most of his effort has been spent in resolving issues concerning the NRC investigation of the independency issue; however, progress was made in the independent requalification of the Auxiliary Building, pipe supports and equipment. Seventeen EOI's were issued and appended to his progress report. These are being reviewed in conformance with PGandE's internal procedure to determine their significance and make an appropriate disposition. R. F. Reedy, Inc. has completed the field audits of Phase I PGandE subcontractors and is preparing audit reports.

Annulus Review Status

Civil Engineering

Structures

Verified seismic loads for approximately 70% of the pipe supports attached to the annulus structure have been received. Confirmatory analysis of the annulus structure for equipment seismic reaction loads is in progress, and will be completed after the remaining piping support loads are finalized.

Conduit Supports

Approximately 95% of the electrical conduit supports have been reviewed and found to be qualified for the revised annulus spectra. The analysis is scheduled to be complete by January 31, 1982.

Mechanical Engineering

Mechanical Equipment

The review of mechanical equipment and mountings is complete. As previously reported, this review found that modification of one fan cooler attachment weld was required. This modification is now scheduled to be complete by February 12, 1982.

.8201290443

Instrumentation

The field modifications to two tubing supports previously reported are now scheduled to be complete by January 29, 1982.

Piping

The piping reanalysis resulting from the use of the revised annulus spectra is complete.

The review of supports associated with piping analyses is approximately 97% complete. Five hundred and fifty have been qualified as-built and ninety require modification. Review and redesign of supports are now scheduled to be complete by January 25, 1982.

The review of pipe supports with manually calculated loads which are subjected to higher loads due to both the revised and reoriented annulus spectra is complete. A total of 20 supports modification is required. Eighteen are associated with two inch and smaller diameter piping and two with larger diameter piping. All redesign is scheduled to be complete by January 23, 1982.

RLCA Error and Open Item Status (EOI's)

The status of our investigation of RLCA EOI's is as follows:

RLCA File No. 910 (Open Item) --- Raceway Supports.

Sample 04 - The affected support has been qualified for the as-built condition. A search of field records is being initiated to identify similar installations. These supports will be reviewed to determine as-built adequacy. The installation criteria drawing will be revised to better clarify the design note.

Sample 15 - This specific conduit support has been qualified for the as-built condition. Review of field records has identified three similar supports. PGandE is reviewing as-built drawings to determine the adequacy of these conduit supports.

Sample 20 - A review of the identified support determined the as-built condition acceptable. A conduit support was qualified for a specific building area. This support was attached to a wall bordering this area, but the support was attached on the opposite side of the wall. Since the structural response is identical on both sides of the wall, the installation is acceptable. A program is being developed to determine whether there are similar situations.

RLCA File No. 920 (Open Item) --- Auxiliary Building Spectra.

RLCA reported that certain response spectra in the north-south direction as reported in the 1979 URS/Blume report differed from the response spectra used in the Hosgri seismic evaluation and as reported in the 1977 Hosgri Report.

Our review has determined that, in general, the 1979 translational spectra are lower than the corresponding 1977 spectra and the 1979 torsional spectra are higher than the corresponding 1977 spectra. The effect of the torsional spectra depends on the location of the components with respect to the center of mass of the building. For each location, it is combined with the translational spectra to determine the horizontal spectra.

The 1979 spectra do not affect the qualification of the building itself since the zero period accelerations are lower than those on the 1977 spectra.

PGandE is reviewing the data at each elevation above the ground elevation for which the magnitudes of the combined 1979 translational and torsional spectra are greater than those of the corresponding 1977 spectra. The analysis is expected to be complete by January 29, 1982.

RLCA File No. 930 (Open Item) --- Raceway Criteria.

This file is being investigated.

RLCA File No. 931 (Open Item) --- Valve Orientation.

PGandE concurs with the RLCA finding that Valve 9001A is installed in a vertical rather than horizontal position as shown in design review ISO 446540, Rev. 9. The drawing deficiency does not affect piping or pipe support designs as the valve was modeled in the piping analysis with the operator in the as-built vertical position. Design Review ISO 446540 is being revised to indicate the vertical valve operator orientation in resolution of the item.

RLCA File No. 932 (Open Item) --- Piping Support.

PGandE concurs with this finding. Pipe support design criteria, Document DCM M-9, require all seismic supports to be two-way restraints with the pipe restrained in each direction along the restraining axis. A proper horizontal restraint was provided in combination with a partial vertical restraint. The support will be modified to prevent upward movement thus obtaining compliance with DCM M-9 and piping analysis requirements.

Presently the failure to provide restraint in both directions along the restraining axis is believed to be unique to this support.

The technical report will provide detailed resolutions to all RLCA findings.

Other Findings

PGandE's previous semi-monthly status reports addressed progress of annulus related reviews, plant modifications and an assessment of RLCA reports. Due to the interest in the results of other PGandE investigations, this status report is now being expanded to include issues not related to the spectra revision. These items were previously planned for inclusion only in the final technical report.

Valve modelling in piping analyses.

Modelling of all annulus area valves was reviewed. Six were found to be modelled incorrectly. Four were modelled without including the remote operator and two were modelled with the same mass point for the remote operator support and concentrated weight, thus causing an inaccurate operator support load.

The valve modelling in all Unit 1 piping analyses is being reviewed. If any other valve modelling errors are found, affected piping analyses will be rerun and pipe supports will either be qualified as-built, redesigned, or added to comply with allowable piping and support stress criteria.

Hosgri Spectra Digitization

The digitization of the East-West Translational Hosgri Spectra for the 140' elevation in the Auxiliary Building has been found to contain an error. The error affected only accelerations in the frequency range of 7.25 Hz to 10.31 Hz for 2% damping and 7.58 Hz to 9.90 Hz for 3% damping. Four percent damping was not utilized for piping analysis.

All affected piping analyses will be rerun and pipe supports qualified as-built or redesigned to comply with allowable piping and support stress criteria. Investigations are in progress to determine if other plant components are affected.

Raceway Supports

While compiling annulus structural steel loads, we discovered that the method used to calculate raceway weights may have resulted in an underestimation of the weights of some conduits. As a result of this discovery, PGandE is conducting a thorough reverification program for all raceway supports. This program is continuing. To date, no inadequacies have been found in the design of any support as a result of this review. The results of the reverification program will be included in the technical report.

Small Bore Pipe Rod Hangers Used As Vertical Seismic Restraints

This issue was identified in our status report of January 8, 1982.

Modification of all Unit 1 single rod supports required to provide restraint in both vertical directions is scheduled to be complete February 1, 1982.

D. A. BRAND
Vice President, Engineering

PROGRESS CHART-ANNULUS AREA SEISMIC REVIEW PROGRAM—STATUS AS OF 1-20-82

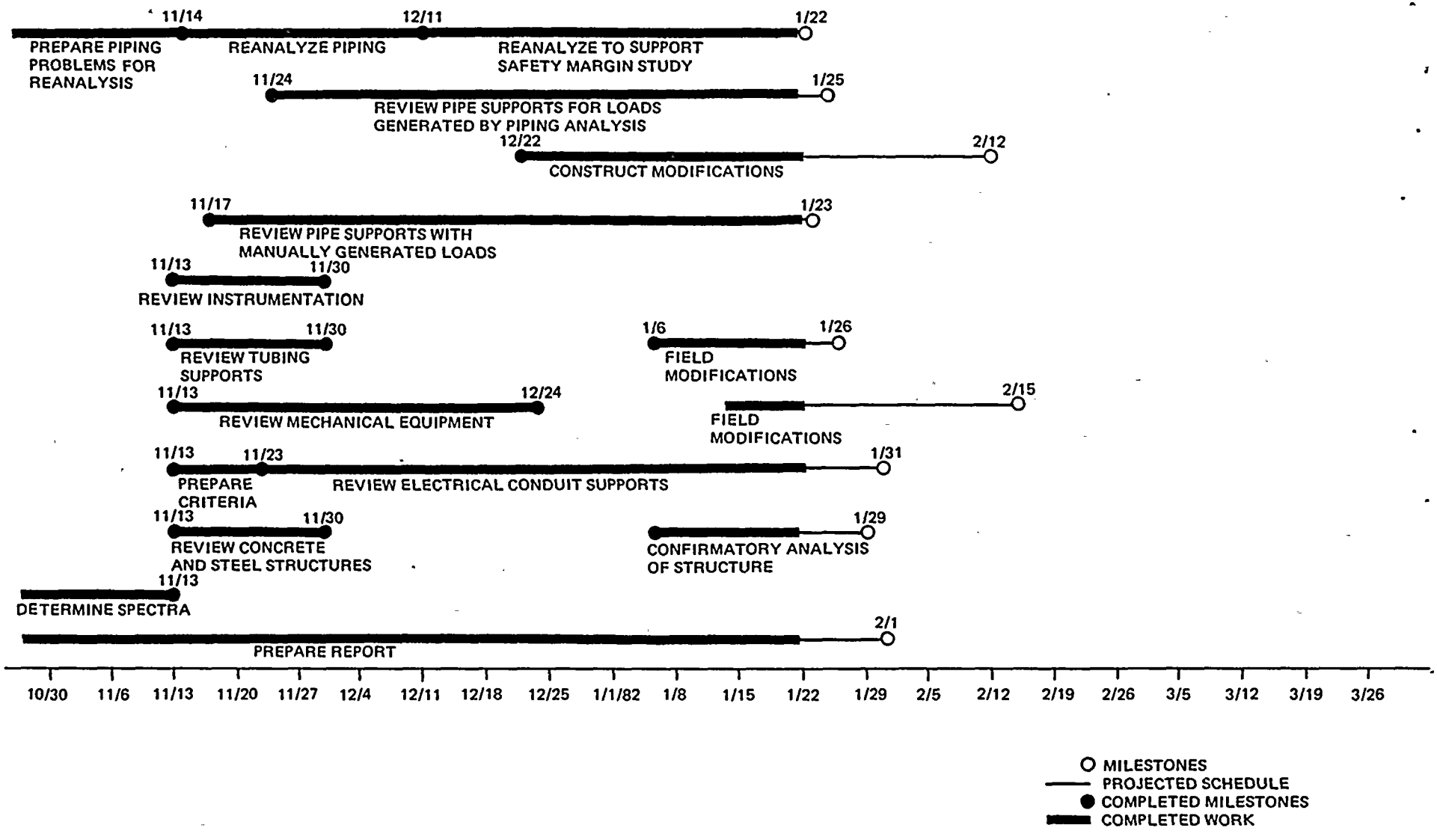

ROBERT L. CLOUD ASSOCIATES, INC.
125 UNIVERSITY AVENUE
BERKELEY, CALIFORNIA 94710
(415) 841-9296

P 105-4

January 21, 1982

Mr. George Maneatis
Senior Vice President
Pacific Gas and Electric Company
77 Beale Street
San Francisco, CA 94106

Dear Mr. Maneatis:

Enclosed please find our sixth progress report on the seismic reverification program.

Yours truly,

R. L. Cloud

RLC:hcc

Enclosure

cc: James Rocca

PROGRESS REPORT
OF
SEISMIC SERVICE-RELATED CONTRACTS
PRIOR TO JUNE 1978
DIABLO CANYON NUCLEAR POWER PLANT

Project 105-4
Progress Report No. 6
Work Period from 1/7/1982 to 1/20/1982

Report of work performed for
Pacific Gas and Electric Company by
Robert L. Cloud Associates, Inc.

Robert L. Cloud Associates, Inc.

125 University Avenue
Berkeley, CA 94710
(415) 841-9296

Post Office Box 687
West Falmouth, MA 02574
(617) 540-5381

PROGRESS REPORT
OF
SEISMIC SERVICE-RELATED CONTRACTS
PRIOR TO JUNE 1978
DIABLO CANYON NUCLEAR POWER PLANT

Project 105-4
Progress Report No. 6
Work Period from 1/7/1982 to 1/20/1982

Report of work performed for
Pacific Gas and Electric Company by
Robert L. Cloud Associates, Inc.

Robert L. Cloud Associates, Inc.

125 University Avenue
Berkeley, CA 94710
(415) 841-9296

Post Office Box 687
West Falmouth, MA 02574
(617) 540-5381

PROGRESS REPORT NO. 6
OF SEISMIC SERVICE-RELATED CONTRACTS
PRIOR TO JUNE 1978
DIABLO CANYON NUCLEAR POWER PLANT
Work Period from 1/7/82 to 1/20/82

TABLE OF CONTENTS

1.	Summary	Page 1
2.	Work Accomplished	4
2.1	Task 1 - Review of Seismic Design Chain	4
2.2	Task 1 - Independent Requalification	4
2.2.1	Auxiliary Building	4
2.2.2	Piping Runs and Pipe Supports	4
2.2.3	Equipment	5
2.2.4	Conduit and HVAC Duct Supports	5
2.2.5	Small Bore Piping Runs and HVAC Components	5
2.3	Task 3 - Field Verification	5
2.4	RLCA QA/QC Procedures	6
2.5	Task 4 - PGandE and Its Contractors' QA/QC Procedures	6
2.6	Error and Open Item (EOI) Report	6
3.	Significant Results and Findings	7
4.	Scheduled Work for Next Work Period	8
4.1	Task 1 - Review of Seismic Design Chain	8
4.2	Task 2 - Independent Requalification	8
4.2.1	Auxiliary Building	8
4.2.2	Piping Runs and Pipe Supports	8
4.2.3	Equipment	8
4.2.4	Conduit and HVAC Duct Supports	8
4.2.5	Small Bore Piping Runs and HVAC Components	8

4.3 Task 3 - Field Verification 9
4.4 RLCA QA/QC Procedures 9
4.5 Task 4 - PGandE and Its Contractors' QA/QC Procedures 9
4.6 Error and Open Item (EOI) Report 9

5. Conclusion 10

Attachment A - Progress Report on Quality Assurance by RFR, Inc.

Attachment B - EO. Report for work period from 1/7/82 to 1/20/82

4.3 Task 3 - Field Verification 9
4.4 RLCA QA/QC Procedures 9
4.5 Task 4 - PGandE and Its Contractors' QA/QC Procedures 9
4.6 Error and Open Item (EOI) Report 9

5. Conclusion 10

Attachment A - Progress Report on Quality Assurance by RFK, Inc.

Attachment B - EO Report for work period from 1/7/82 to 1/20/82

DESIGN REVERIFICATION PROGRAM
SEISMIC SERVICE-RELATED CONTRACTS
PRIOR TO JUNE 1978
DIABLO CANYON NUCLEAR POWER PLANT

Work Period from 1/7/82 to 1/20/82. Progress Report Number 6.

Because of the time spent on responding to the NRC's questionaire on RLCA's independency issue and on resolving the discrepancies between PGandE's and the independent seismic calculations and PGandE's as-built drawings and field verification, the work progress of the seismic verification program has been affected.

The work scope review of all seismic service-related contracts performed prior to June, 1978 is continuing.

The stiffness and mass computations of the dynamic models of the Auxiliary Building is 95% complete. These computations are being checked and reviewed. The difference in floor response spectra between the Hosgri and the URS/Blume 1979 reports as presented in the last EOI Report has not been resolved.

The review of independent calculations of the Containment Spray, Safety Injection, and Charging Pump Suction is nearly complete, pending final field verification of piping geometry. The preliminary analysis of RHR pump suction, CCW supply to Fan Coolers and Pressurizer Relief Valve lines is complete.

The results of the above analysis are being checked and reviewed. The modeling of other four piping lines is continuing.

The evaluation of rigidity assumption of piping supports has begun. Ten piping supports have been field verified.

The work is almost complete on the independent calculations of the Boric Acid tank, Diesel Engine Air Receiver, Motor and Turbine Driven Auxiliary Feed Pumps, and Hot Shutdown Remote Control Panel. The review of other equipment independent calculations has resulted in finding some discrepencies between PGandE and the independent calculations. They are reported in the attached Error and Open Item Report (EOI Report). The comparison of the response spectra used in the electrical equipment qualification test with the required Hosgri response spectra is nearly complete.

The weights for conduits and cable trays used in the PGandE criteria have been examined and were found in almost all cases to exceed the weights computed from the as-built information. PGandE addressing, on a case by case basis, those cases whose weights are less conservative.

The review of the independent calculations of the supply fan is continuing. The preliminary calculations of the chosen damper indicates that additional information is required. The independent calculation of the damper has been temporarily suspended.

All the equipment and some piping lines selected for independent calculations have been field examined. All tanks, heat exchangers and pumps have been found to be in agreement with the design. Several discrepancies were found when field-examining some of the pipe lines. They are reported in the attached EOI Reports. A total effort of 15 engineer and 2 technician days has been spent on the task of field verification.

The quality assurance audit of the chosen six contractors is continuing. The work is being independently performed by R. F. Reedy, Inc. Its progress report is attached.

One error and many open items are reported in the EOI Report. Some of the reported open items are insignificant. The significance of the other oper items can better be assessed upon completion of their independent calculations.

2. WORK ACCOMPLISHED:

There are four tasks of the subject reverification program. The work accomplished for each task in the report work period is described below:

2.1 Task 1 - Review of Seismic Design Chain

The work scope review of all seismic service-related contract's performed prior to June, 1978 is continuing.

2.2 Task 2 - Independent Requalification

The work accomplished for each item in this work period is given below.

2.2.1 Auxiliary Building

The stiffness and mass computations of the dynamic models of the Auxiliary Building is 95% complete. These computations are being checked and reviewed. The difference in floor response spectra between the Hosgri and the URS/Blume 1979 reports as presented in the EOI Report has not been resolved.

2.2.2 Piping Runs and Pipe Supports

The review of independent calculations of the Containment Spray, Safety Injection, and Charging Pump Suction is nearly complete, pending final field verification of piping geometry. The preliminary analysis of RHR Pump Suction, CCW supply to Fan Coolers and Pressurizer Relief Valve lines is complete. The results of the above analysis are being checked and reviewed. The modeling of other four piping lines is continuing.

The evaluation of rigidity assumption of piping supports has begun. Ten piping supports have been field verified.

2.2.3 Equipment

The work is almost complete on the independent calculations of Boric Acid Tank, Diesel Engine Air Receiver, Motor and Turbine Driven Auxiliary Feed Pumps, and Hot Shutdown Remote Control Panel. The review of other equipment independent calculations has resulted in finding some discrepancies between PGandE and the independent calculations. They are reported in the attached Error and Open Item Report (EOI Report). The comparison of the response spectra used in the electrical equipment qualification test with the required Hosgri response spectra is nearly complete.

2.2.4 Conduit and HVAC Duct Supports

The weights for conduits and cable trays used in the PGandE criteria have been examined and were found in almost all cases to exceed the weights computed from as-built information. PGandE is addressing, on a case by case basis, those cases whose weights are less conservative.

2.2.5 Small Bore Piping Runs and HVAC Components

The review of independent calculation of the supply fan is continuing. The preliminary calculation of the chosen damper indicates that additional information is required. The independent calculation of the damper has been temporarily suspended. No work was done on small bore piping in this work period.

2.3 Task 3 - Field Verification

All the equipment and some piping lines selected for independent

calculations have been field examined. All tanks, heat exchangers and pumps have been found to be in agreement with the design. Several discrepancies were found when field-examining some of the piping lines. They are reported in the attached EOI Report. A total effort of 15 engineer and 2 technical days has been spent on the task of field verification.

2.4 RLCA QA/QC Procedures

The RLCA QA/QC procedures have been enforced. No violation was found for this work period.

2.5 Task 4 - PGandE and Its Contractors QA/QC Procedures

See Attachment A

2.6 Error and Open Item (EOI) Report

The EOI Report for this work period is given in Attachment B.

calculations have been field examined. All tanks, heat exchangers and pumps have been found to be in agreement with the design. Several discrepancies were found when field-examining some of the piping lines. They are reported in the attached EOI Report. A total effort of 15 engineer and 2 technical days has been spent on the task of field verification.

2.4 RLCA QA/QC Procedures

The RLCA QA/QC procedures have been enforced. No violation was found for this work period.

2.5 Task 4 - PGandE and Its Contractors QA/QC Procedures

See Attachment A

2.6 Error and Open Item (EOI) Report

The EOI Report for this work period is given in Attachment B.

3.0 SIGNIFICANT RESULTS AND FINDINGS

No significant results or findings other than those listed in the EOI Report can be reported for the tasks performed in this work period.

4. SCHEDULED WORK FOR NEXT WORK PERIOD

4.1 Task 1 - Review of Seismic Design Chain

The report will be completed for the review of seismic service-related contracts performed prior to June 1978.

4.2 Task 2 - Independent Requalification

4.2.1 Auxiliary Building

It is anticipated that the dynamic models will be completed and will be compared with the models used for the Hosgri evaluation of the Auxiliary Building.

4.2.2 Piping Runs and Pipe Supports

It is anticipated that most of the independent calculations of the chosen piping runs and pipe supports will be completed in the next work period.

4.2.3 Equipment

The independent calculations of the chosen equipment will be completed in the next work period.

4.2.4 Conduit and HVAC Duct Supports

The independent calculations of the chosen two HVAC ducts will continue.

4.2.5 Small Bore Piping Runs and HVAC Components

The completion of independent calculation of the chosen HVAC damper will be completed if additional design information is gathered.

The independent calculations of some of the small bore piping runs will be accomplished.

4.3 Task 3 - Field Verification

At least one field trip to the plant is planned to inspect and to verify the as-built support conditions for the small bore piping runs, some piping supports and piping runs.

4.4 RLCA QA/QC Procedures

The established RLCA QA/QC procedures will be continuously enforced to ensure the quality of engineering work.

4.5 Task 4 - PGandE and Its Contractors' QA/QC Procedures

See Attachment A for the schedule and the planned work for the next work period.

4.6 Error and Open Item Report

When the errors and/or open items are found, they will be reported.

5. CONCLUSION

The work progress of the seismic reverification program has been affected because of the time spent on responding to the NRC's questionnaire on RLCA's independence issue and on resolving the discrepancies between PGandE and the independent calculations and PGandE's as-built drawings and field verifications.

Except for one error, the other items in the EOI Report are open items. Some of the reported open items are insignificant. The significance of the other open items can better be assessed upon completion of their independent calculations.

ATTACHMENT A

R. F. REEDY, INCORPORATED
236 N. Santa Cruz Avenue
Los Gatos, California 95030 • (408) 354-9110

January 20, 1982

ROBERT L. CLOUD AND ASSOCIATES, INC.
125 University Avenue
Berkeley, California 94710

Subject: Biweekly Report of RFR, Inc. Activities Regarding PG&E Independent Audit, Phase I, January 13, 1982 through January 20, 1982

Dear Mr. Cloud:

This report covers our activities through January 20, 1982, with regard to our independent Quality Assurance reviews of the Diablo Canyon Unit 1 Plant.

To summarize our activities to date, we have completed the following steps in our review of the quality assurance programs of PG&E and the six organizations performing seismic safety-related design work under subcontract to PG&E:

(1) We have completed our reviews of PG&E's and the six subcontractors' quality assurance program manuals and procedures, using the Program Review Checklist included in our December 19, 1981 biweekly progress report.

(2) Lists of questions were generated as a result of the program reviews, and were presented to PG&E and the subcontractors, in preparation for program implementation audits. The questions were designed to clarify non-specific areas of the program manuals and to assist the audited organizations in understanding the scope of the audits to be performed. The lists of questions were included in our December 19, 1981 and January 4, 1982 biweekly progress reports.

(3) Detailed Audit Checklists have been generated in preparation for our program implementation audits of PG&E and the six subcontractors. The Audit Checklists for ANCO Engineers and EDS Nuclear were included in our January 4, 1982 biweekly progress report, and the Audit Checklists for EES (Cygna), WYLE, URS/Blume, and Harding Lawson Associates were included in our January 12, 1982

biweekly progress report. The Audit Checklist for PG&E is in preparation, and will be completed in accordance with the attached schedule (Appendix A).

(4) We have completed the design service contractor implementation audits. All Audit Reports for these audits will be completed by January 30, 1982. The implementation audit of PG&E will be conducted in accordance with the schedule in Appendix A.

Appendix A shows our schedule for completion of the implementation audits and audit reports for Phase I, as of this date.

Very truly yours,

Roger F. Reedy, P.E.
R. F. REEDY, INC.

RFR:na

Encl.

APPENDIX A

R. F. REEDY, INC.

PHASE I SCHEDULE

January 21 - 23, 1982

1. Complete Audit Reports of ANCO, EDS and Harding-Lawson Associates.

2. Begin Audit Reports of EES (Cygna), WYLE and URS/Blume.

January 25 - 30, 1982

1. Complete Audit Reports of EES (Cygna), WYLE and URS/Blume.

2. Complete Audit Checklist for PG&E.

February 1 - 5, 1982

1. Audit PG&E.

ATTACHMENT B

File No. 933

ERROR AND OPEN ITEM SHEET

1. Classification

☐ Error
or
☒ Open Item

Error Classification
☐ Class (A, B, C, or D)

2. Description

The "as-built" length of line 110 from support 55S/90A to support 545/26R is shown on PGandE Design Review Isometric 446541 Revision 7 as 9 3/4 inches. RLCA field inspection showed this dimension as 12 feet.

3. Significance

The significance of this item can be better assessed upon completion of the RLCA analysis and comparison with PGandE results.

4. Recommendation

A recommendation will be provided upon completion of the RLCA analysis

5. Reported

☒ PGandE Ref. & Date 1/20/82

☐ NRC Ref. & Date

6. Final Resolution

Edward Denison 1/20/82
Signed/Date

Project Engineer/Date
Prior to Release

Project Administrator/Date
Prior to Final Resolution

File No. 934

ERROR AND OPEN ITEM SHEET

1. Classification

☐ Error

or

☒ Open Item

Error Classification

☐ Class (A, B, C, or D)

2. Description

The direction of restraint for support 72/11R on PGand E Design Review Isometric 446541 Revision 7 is not given. RLCA field inspection showed the support active in the vertical direction.

3. Significance

The significance of this item can be better assessed upon completion of the RLCA analysis and comparison with PGandE results.

4. Recommendation

A recommendation will be provided upon completion of the RLCA analysis

5. Reported

☒ PGandE Ref. & Date 1/20/82

☐ NRC Ref. & Date

6. Final Resolution

Edward Dorsin 1/20/82
Signed/Date

[illegible] 1/20/82
Project Engineer/Date
Prior to Release

Project Administrator/Date
Prior to Final Resolution

[illegible]

File No. 935

ERROR AND OPEN ITEM SHEET

1. Classification

☐ Error

or

☒ Open Item

Error Classification

☐ Class (A, B, C, or D)

2. Description

PGandE Design Review Isometric 446542, Revision 10, shows a 3 inch line, number 931, to tee off line 1971 between valve 8804A and the RHR Heat Exchanger 1-1. RLCA field inspection showed no 3 inch line attached to line 1971 between the valve and the Heat Exchanger.

3. Significance

The significance of this item can be better assessed upon completion of the RLCA analysis and comparison with PGandE results.

4. Recommendation

A recommendation will be provided upon completion of the RLCA analysis

5. Reported

☒ PGandE Ref. & Date 1/20/82

☐ NRC Ref. & Date

6. Final Resolution

Edward Dennon 1/20/82
Signed/Date

Dan-cy Chen 1/20/82
Project Engineer/Date
Prior to Release

Project Administrator/Date
Prior to Final Resolution

File No. 936

ERROR AND OPEN ITEM SHEET

1. Classification

☐ Error
or
☒ Open Item

Error Classification
☐ Class (A, B, C, or D)

2. Description

The length of the vertical run of line 1971 between valve 8804A and the RHR Heat Exchanger 1-1 is shown on the PGandE Design Review Isometric 446542, Revision 10, as 2 feet, 0 inches. RLCA field inspection showed this dimension to be 2 feet, 10 inches.

3. Significance

The significance of this item can be better assessed upon completion of the RLCA analysis and comparison with PGandE results. This item is noted because it exceeds the 79-14 criteria by 2 inches.

4. Recommendation

A recommendation will be provided upon completion of the RLCA analysis

5. Reported

☒ PGandE Ref. & Date 1/20/82

☐ NRC Ref. & Date

6. Final Resolution

Edward J. Donovan 1/20/82
Signed/Date

Paul G. Chen 1/20/82
Project Engineer/Date
Prior to Release

Project Administrator/Date
Prior to Final Resolution

File No. 937

ERROR AND OPEN ITEM SHEET

1. Classification

☐ Error
or
☒ Open Item

Error Classification
☐ Class (A, B, C, or D)

2. Description

PGandE Design Review Isometric 446544, Revision 11, does not show the second flange on the vertical run of line 44 from the Stabilizer/Separator. RLCA field inspection showed the location of this second flange 13 inches above the first flange.

3. Significance

The significance of this item can be better assessed upon completion of the RLCA analysis and comparison with PGandE results.

4. Recommendation

A recommendation will be provided upon completion of the RLCA analysis

5. Reported

☒ PGandE Ref. & Date 1/20/82

☐ NRC Ref. & Date

6. Final Resolution

Edward L. Lemmon 1/20/82
Signed/Date

Dan C. Chen 1/20/82
Project Engineer/Date
Prior to Release

Project Administrator/Date
Prior to Final Resolution

File No. 938

ERROR AND OPEN ITEM SHEET

1. Classification

☐ Error
or
☒ Open Item

Error Classification
☐ Class (A, B, C, or D)

2. Description

Valve 8805B is shown on PGandE Design Review Isometric 446544, Revision 11, in a vertical position. RLCA field inspection showed that the valve is in a horizontal position.

3. Significance

The significance of this item can be better assessed upon completion of the RLCA analysis and comparison with PGandE results.

4. Recommendation

A recommendation will be provided upon completion of the RLCA analysis

5. Reported

☒ PGandE Ref. & Date 1/20/82

☐ NRC Ref. & Date

6. Final Resolution

Edward Denison 1/20/82
Signed/Date

Dave Chen 4/20/82
Project Engineer/Date
Prior to Release

Project Administrator/Date
Prior to Final Resolution

File No. 939

ERROR AND OPEN ITEM SHEET

1. Classification

☐ Error

or

☒ Open Item

Error Classification

☐ Class (A, B, C, or D)

2. Description

Support 73/72R on PGandE Design Review Isometric 446544, Revision 11, is shown to be active in the NS direction only. RLCA field inspection showed the support active in both NS and EW directions.

3. Significance

The significance of this item can be better assessed upon completion of the RLCA analysis and comparison with PGandE results.

4. Recommendation

A recommendation will be provided upon completion of the RLCA analysis

5. Reported

☒ PGandE Ref. & Date 1/20/82

☐ NRC Ref. & Date

6. Final Resolution

Edward Denier 1/20/82
Signed/Date

Dave Chen 1/20/82
Project Engineer/Date
Prior to Release

Project Administrator/Date
Prior to Final Resolution

File No. 940

ERROR AND OPEN ITEM SHEET

1. Classification

☐ Error

or

☒ Open Item

Error Classification

☐ Class (A, B, C, or D)

2. Description

The "as-built" length of line 103 south of supports 18/2R and 18/12SL is shown on PGandE Design Review Isometric 449316, Revision 3, as 15 feet, 6 inches. RLCA field inspection showed this dimension as 6 feet.

3. Significance

The significance of this item can be better assessed upon completion of the RLCA analysis and comparison with PGandE results.

4. Recommendation

A recommendation will be provided upon completion of the RLCA analysis

5. Reported

☒ PGandE Ref. & Date 1/20/82

☐ NRC Ref. & Date

6. Final Resolution

Edward Domian 1/20/82
Signed/Date

Dan C. Chen 1/20/82
Project Engineer/Date
Prior to Release

Project Administrator/Date
Prior to Final Resolution

File No. 941

ERROR AND OPEN ITEM SHEET

1. Classification

☐ Error
or
☒ Open Item

Error Classification
☐ Class (A, B, C, or D)

2. Description

The direction of restraint for support 18/4R on PGandE Design Review Isometric 449316, Revision 3, is not given. RLCA field inspection showed the support active in the vertical direction.

3. Significance

The significance of this item can be better assessed upon completion of the RLCA analysis and comparison with PGandE results.

4. Recommendation

A recommendation will be provided upon completion of the RLCA analysis

5. Reported

☒ PGandE Ref. & Date 1/20/82

☐ NRC Ref. & Date

6. Final Resolution

Edward Dorin 1/20/82
Signed/Date

Paul G Chen 1/20/82
Project Engineer/Date
Prior to Release

Project Administrator/Date
Prior to Final Resolution

File No. 942

ERROR AND OPEN ITEM SHEET

1. Classification

☐ Error

or

☒ Open Item

Error Classification

☐ Class (A, B, C, or D)

2. Description

Support 18/7R is not shown on PGandE Design Review Isometric 449316, Revision 3. RLCA field inspection showed this support to be located between valve FCV 355 and FE 46 on line 2277.

3. Significance

The significance of this item can be better assessed upon completion of the RLCA analysis and comparison with PGandE results.

4. Recommendation

A recommendation will be provided upon completion of the RLCA analysis

5. Reported

☒ PGandE Ref. & Date 1/20/82

☐ NRC Ref. & Date

6. Final Resolution

Edward Denison 1/20/82
Signed/Date

Jao-ye Chen 1/20/82
Project Engineer/Date
Prior to Release

Project Administrator/Date
Prior to Final Resolution

File No. 943

ERROR AND OPEN ITEM SHEET

1. Classification

☐ Error
or
☒ Open Item

Error Classification
☐ Class (A, B, C, or D)

2. Description

Support 5006/V is not shown on PGandE Design Review Isometric 449316 Revision 3. RLCA field inspection showed this support to be located 18 inches north of the center line of valve FCV 431.

3. Significance

The significance of this item can be better assessed upon completion of the RLCA analysis and comparison with PGandE results.

4. Recommendation

A recommendation will be provided upon completion of the RLCA analysis

5. Reported

☒ PGandE Ref. & Date 1/20/82

☐ NRC Ref. & Date

6. Final Resolution

Edward Denison 1/20/82
Signed/Date

Dao-Q Chen 1/20/82
Project Engineer/Date
Prior to Release

Project Administrator/Date
Prior to Final Resolution

File No. 944

ERROR AND OPEN ITEM SHEET

1. Classification

☐ Error

or

☒ Open Item

Error Classification

☐ Class (A, B, C, or D)

2. Description

Support 5003/V on PGandE Design Review Isometric 449316, Revision 3, is not adequately located. RLCA field inspection showed this support to be located 18 inches north of the center line of valve FCV 430.

3. Significance

The significance of this item can be better assessed upon completion of the RLCA analysis and comparison with PGandE results.

4. Recommendation

A recommendation will be provided upon completion of the RLCA analysis

5. Reported

☒ PGandE Ref. & Date 1/20/82

☐ NRC Ref. & Date

6. Final Resolution

Edward Denison 1/20/82
Signed/Date

Dave Chen 1/20/82
Project Engineer/Date
Prior to Release

Project Administrator/Date
Prior to Final Resolution

File No. 945

ERROR AND OPEN ITEM SHEET

1. Classification

☐ Error
or
☒ Open Item

Error Classification
☐ Class (A, B, C, or D)

2. Description

PGandE Design Review Isometric 449314, Revision 3, shows line 104 supported at the J column line. The support identification number and the directions of restraint are not specified. RLCA field inspection showed this support labeled as 55S/20R.

3. Significance

The significance of this item can be better assessed upon completion of the RLCA analysis and comparison with PGandE results.

4. Recommendation

A recommendation will be provided upon completion of the RLCA analysis

5. Reported

☒ PGandE Ref. & Date 1/20/82

☐ NRC Ref. & Date

6. Final Resolution

Edward Demiston 1/20/82
Signed/Date

Dan-g Chen 1/20/82
Project Engineer/Date
Prior to Release

Project Administrator/Date
Prior to Final Resolution

File No. 946

ERROR AND OPEN ITEM SHEET

1. Classification

☐ Error

or

☒ Open Item

Error Classification

☐ Class (A, B, C, or D)

2. Description

The dimension of the vertical run of line 1980 between valves 8922A and 8921A on PGandE Design Review Isometric 446546, Revision 8, is not specified. RLCA field inspection showed this dimension to be 8 inches.

3. Significance

The significance of this item can be better assessed upon completion of the RLCA analysis and comparison with PGandE results.

4. Recommendation

A recommendation will be provided upon completion of the RLCA analysis

5. Reported

☒ PGandE Ref. & Date 1/20/82

☐ NRC Ref. & Date

6. Final Resolution

Edward Denison 1/20/82
Signed/Date

Jay-Q Chen 1/20/82
Project Engineer/Date
Prior to Release

Project Administrator/Date
Prior to Final Resolution

File No. 947

ERROR AND OPEN ITEM SHEET

1. Classification

☐ Error
or
☒ Open Item

Error Classification
☐ Class (A, B, C, or D)

2. Description

Valve 8821 A is shown on PGandE Design Review Isometric 446546, Revision 8, as being installed in the horizontal position. RLCA field inspection showed that the valve is in a vertical position.

3. Significance

The significance of this item can be better assessed upon completion of the RLCA analysis and comparison with PGandE results.

4. Recommendation

A recommendation will be provided upon completion of the RLCA analysis

5. Reported

☒ PGandE Ref. & Date 1/20/82

☐ NRC Ref. & Date

6. Final Resolution

Edward Dennison 1/20/82
Signed/Date

Jau-yu Chen 1/20/82
Project Engineer/Date
Prior to Release

Project Administrator/Date
Prior to Final Resolution

File No. 947

ERROR AND OPEN ITEM SHEET

1. Classification

☐ Error
or
☒ Open Item

Error Classification
☐ Class (A, B, C, or D)

2. Description

Valve 8821 A is shown on PGandE Design Review Isometric 44654G, Revision 8, as being installed in the horizontal position. RLCA field inspection showed that the valve is in a vertical position.

3. Significance

The significance of this item can be better assessed upon completion of the RLCA analysis and comparison with PGandE results.

4. Recommendation

A recommendation will be provided upon completion of the RLCA analysis

5. Reported

☒ PGandE Ref. & Date 1/20/82

☐ NRC Ref. & Date _____

6. Final Resolution

Edward Jennings 1/20/82
Signed/Date

Project Engineer/Date
Prior to Release

Project Administrator/Date
Prior to Final Resolution

File No. 948

ERROR AND OPEN ITEM SHEET

1. Classification

☐ Error

or

☒ Open Item

Error Classification

☐ Class (A, B, C, or D)

2. Description

The direction of restraint for support 13/23SL on PGandE Design Review Isometric 446491, Revision 10, is not given. RLCA field inspection showed the snubber acting in a vertical direction.

3. Significance

The significance of this item can be better assessed upon completion of the RLCA analysis and comparison with PGandE results.

4. Recommendation

A recommendation will be provided upon completion of the RLCA analysis

5. Reported

☒ PGandE Ref. & Date 1/20/82

☐ NRC Ref. & Date

6. Final Resolution

Edward Denison 1/20/82
Signed/Date

Project Engineer/Date
Prior to Release

Project Administrator/Date
Prior to Final Resolution

File No. 949

ERROR AND OPEN ITEM SHEET

1. Classification

[X] Error
or
[ ] Open Item

Error Classification
[ ] Class (A, B, C, or D)
A or B

2. Description MAIN ANNUNCIATOR CABINET

- Original analysis considered cabinet rigid in longitudinal direction.
- Actual first mode frequency is 14 Hz or less by independent calculation.

3. Significance

- Seismic bracing at top of cabinet - anchor bolts exceed allowable pull out load.
- Annunciator equipment qualification was based on a rigid cabinet assumption.

4. Recommendation

- PGandE to investigate
- RLCA to examine other cabinets.

5. Reported

[X] PGandE Ref. & Date 1/20/82

[ ] NRC Ref. & Date

6. Final Resolution

Signed/Date 1/20/82

Project Engineer/Date Prior to Release 1/20/82

Project Administrator/Date Prior to Final Resolution

VERIFICATION PROGRAM

PERSONNEL ASSIGNMENTS

PROGRAM ORGANIZATION, MANAGEMENT AND CRITERIA

Dr. R. L. Cloud

BUILDING ANALYSIS

Dr. P. C. Chen
Dr. S. H. Tzuang
Dr. C. J. Holley (Review)
Mr. D. Le

PIPING, PIPE SUPPORTS, AND SMALL BORE ANALYSIS

D. Le
D. Wong
G. Delano
G. Madrid
P. Anderson
K. Leung
S. Harris
K. Jaquay (Review)
B. Sheldon
D. Chatterji
K. Lynch

COMPONENT ANALYSIS

K. Leung
H. Loey
J. Leung
E. Denison

QUALITY ASSURANCE

R. Reedy
B. Gibbons
P. Herbert
E. Varnum
B. Petrokas
R. Swayne

SOILS

Dr. R. McNeil
E. Denison
Dr. S. H. Tzuang
D. Le

8202160474

The balance of the forms "Statement Regarding Potential or Apparent Conflicts of Interest" will be provided at a later date.

STATEMENT REGARDING POTENTIAL OR APPARENT
CONFLICTS OF INTEREST

To: Robert L. Cloud Associates

Whereas, the undersigned understands that he is being assigned as a participant to provide services to Pacific Gas and Electric Company with respect to the Design Verification Program for the Diablo Canyon Nuclear Power Plant - Unit I; and

Whereas, participant understands that it is necessary that he be screened for any apparent or potential conflicts of interest with respect to this assignment;

Therefore, for the above stated reasons participant makes the following representations to Robert L. Cloud Associates:

1. Participant has not engaged in previous work or business involved with or related to the engineering or design of the Diablo Canyon Nuclear Power Plant;

2. Neither participant, nor any member of his or her immediate family, own any beneficial interest in the Pacific Gas & Electric Company, including but not limited to common or preferred stock, bonds or other securities issued on behalf of the Pacific Gas & Electric Company;

3. None of the members of participant's immediate family are employed by Pacific Gas and Electric Company;

4. Continuing financial ties to any company previously involved with or related to the engineering or design of the Diablo Canyon Nuclear Power Plant noted below.

This statement is based on the participant's best information and belief and all exceptions to the representations contained herein have been described below.

E Chr / 2-10-82
Name/Date

Exceptions:

STATEMENT REGARDING POTENTIAL OR APPARENT
CONFLICTS OF INTEREST

To: Robert L. Cloud Associates

Whereas, the undersigned understands that he is being assigned as a participant to provide services to Pacific Gas and Electric Company with respect to the Design Verification Program for the Diablo Canyon Nuclear Power Plant - Unit I; and

Whereas, participant understands that it is necessary that he be screened for any apparent or potential conflicts of interest with respect to this assignment;

Therefore, for the above stated reasons participant makes the following representations to Robert L. Cloud Associates:

1. Participant has not engaged in previous work or business involved with or related to the engineering or design of the Diablo Canyon Nuclear Power Plant;

2. Neither participant, nor any member of his or her immediate family, own any beneficial interest in the Pacific Gas & Electric Company, including but not limited to common or preferred stock, bonds or other securities issued on behalf of the Pacific Gas & Electric Company;

3. None of the members of participant's immediate family are employed by Pacific Gas and Electric Company;

4. Continuing financial ties to any company previously involved with or related to the engineering or design of the Diablo Canyon Nuclear Power Plant noted below.

This statement is based on the participant's best information and belief and all exceptions to the representations contained herein have been described below.

Brian S. Shelton 2/10/82
Name/Date

Exceptions:

STATEMENT REGARDING POTENTIAL OR APPARENT
CONFLICTS OF INTEREST

To: Robert L. Cloud Associates

Whereas, the undersigned understands that he is being assigned as a participant to provide services to Pacific Gas and Electric Company with respect to the Design Verification Program for the Diablo Canyon Nuclear Power Plant - Unit I; and

Whereas, participant understands that it is necessary that he be screened for any apparent or potential conflicts of interest with respect to this assignment;

Therefore, for the above stated reasons participant makes the following representations to Robert L. Cloud Associates:

1. Participant has not engaged in previous work or business involved with or related to the engineering or design of the Diablo Canyon Nuclear Power Plant;

2. Neither participant, nor any member of his or her immediate family, own any beneficial interest in the Pacific Gas & Electric Company, including but not limited to common or preferred stock, bonds or other securities issued on behalf of the Pacific Gas & Electric Company;

3. None of the members of participant's immediate family are employed by Pacific Gas and Electric Company;

4. Continuing financial ties to any company previously involved with or related to the engineering or design of the Diablo Canyon Nuclear Power Plant noted below.

This statement is based on the participant's best information and belief and all exceptions to the representations contained herein have been described below.

Kevin Ignelzi / 2-10-82
Name/Date

Exceptions:

STATEMENT REGARDING POTENTIAL OR APPARENT
CONFLICTS OF INTEREST

To: Robert L. Cloud Associates

Whereas, the undersigned understands that he is being assigned as a participant to provide services to Pacific Gas and Electric Company with respect to the Design Verification Program for the Diablo Canyon Nuclear Power Plant - Unit I; and

Whereas, participant understands that it is necessary that he be screened for any apparent or potential conflicts of interest with respect to this assignment;

Therefore, for the above stated reasons participant makes the following representations to Robert L. Cloud Associates:

1. Participant has not engaged in previous work or business involved with or related to the engineering or design of the Diablo Canyon Nuclear Power Plant;

2. Neither participant, nor any member of his or her immediate family, own any beneficial interest in the Pacific Gas & Electric Company, including but not limited to common or preferred stock, bonds or other securities issued on behalf of the Pacific Gas & Electric Company;

3. None of the members of participant's immediate family are employed by Pacific Gas and Electric Company;

4. Continuing financial ties to any company previously involved with or related to the engineering or design of the Diablo Canyon Nuclear Power Plant noted below.

This statement is based on the participant's best information and belief and all exceptions to the representations contained herein have been described below.

2/10/82

Name/Date

Exceptions:

Own less than 4000 shares of stock of IMPELL CORP.

STATEMENT REGARDING POTENTIAL OR APPARENT
CONFLICTS OF INTEREST

To: Robert L. Cloud Associates

Whereas, the undersigned understands that he is being assigned as a participant to provide services to Pacific Gas and Electric Company with respect to the Design Verification Program for the Diablo Canyon Nuclear Power Plant - Unit I; and

Whereas, participant understands that it is necessary that he be screened for any apparent or potential conflicts of interest with respect to this assignment;

Therefore, for the above stated reasons participant makes the following representations to Robert L. Cloud Associates:

1. Participant has not engaged in previous work or business involved with or related to the engineering or design of the Diablo Canyon Nuclear Power Plant;

2. Neither participant, nor any member of his or her immediate family, own any beneficial interest in the Pacific Gas & Electric Company, including but not limited to common or preferred stock, bonds or other securities issued on behalf of the Pacific Gas & Electric Company;

3. None of the members of participant's immediate family are employed by Pacific Gas and Electric Company;

4. Continuing financial ties to any company previously involved with or related to the engineering or design of the Diablo Canyon Nuclear Power Plant noted below.

This statement is based on the participant's best information and belief and all exceptions to the representations contained herein have been described below.

Janice Chu 2/10/82
Name/Date

Exceptions:

STATEMENT REGARDING POTENTIAL OR APPARENT

CONFLICTS OF INTEREST

To: Robert L. Cloud Associates

Whereas, the undersigned understands that he is being assigned as a participant to provide services to Pacific Gas and Electric Company with respect to the Design Verification Program for the Diablo Canyon Nuclear Power Plant - Unit I; and

Whereas, participant understands that it is necessary that he be screened for any apparent or potential conflicts of interest with respect to this assignment;

Therefore, for the above stated reasons participant makes the following representations to Robert L. Cloud Associates:

1. Participant has not engaged in previous work or business involved with or related to the engineering or design of the Diablo Canyon Nuclear Power Plant;

2. Neither participant, nor any member of his or her immediate family, own any beneficial interest in the Pacific Gas & Electric Company, including but not limited to common or preferred stock, bonds or other securities issued on behalf of the Pacific Gas & Electric Company;

3. None of the members of participant's immediate family are employed by Pacific Gas and Electric Company;

4. Continuing financial ties to any company previously involved with or related to the engineering or design of the Diablo Canyon Nuclear Power Plant noted below.

This statement is based on the participant's best information and belief and all exceptions to the representations contained herein have been described below.

R L Cloud 1/31/82

Name/Date

Exceptions:

1. During the period 8/71 to 8/78, I was Manager of the Mechanics & Materials Technology Organization at Westinghouse Elec. Corp. with second level management responsibility for Mechanical & Material qualification of all W-NSSS Primary Systems including Diablo Canyon.

2. Participated in all RLCA Inc. Projects done for PG&E. These are listed separately.

STATEMENT REGARDING POTENTIAL OR APPARENT
CONFLICTS OF INTEREST

To: Robert L. Cloud Associates

Whereas, the undersigned understands that he is being assigned as a participant to provide services to Pacific Gas and Electric Company with respect to the Design Verification Program for the Diablo Canyon Nuclear Power Plant - Unit I; and

Whereas, participant understands that it is necessary that he be screened for any apparent or potential conflicts of interest with respect to this assignment;

Therefore, for the above stated reasons participant makes the following representations to Robert L. Cloud Associates:

1. Participant has not engaged in previous work or business involved with or related to the engineering or design of the Diablo Canyon Nuclear Power Plant;

2. Neither participant, nor any member of his or her immediate family, own any beneficial interest in the Pacific Gas & Electric Company, including but not limited to common or preferred stock, bonds or other securities issued on behalf of the Pacific Gas & Electric Company;

3. None of the members of participant's immediate family are employed by Pacific Gas and Electric Company;

4. Continuing financial ties to any company previously involved with or related to the engineering or design of the Diablo Canyon Nuclear Power Plant noted below.

This statement is based on the participant's best information and belief and all exceptions to the representations contained herein have been described below.

Dao Q. Le 1/31/82
Name/Date

Exceptions:

NONE

STATEMENT REGARDING POTENTIAL OR APPARENT
CONFLICTS OF INTEREST

To: Robert L. Cloud Associates

Whereas, the undersigned understands that he is being assigned as a participant to provide services to Pacific Gas and Electric Company with respect to the Design Verification Program for the Diablo Canyon Nuclear Power Plant - Unit I; and

Whereas, participant understands that it is necessary that he be screened for any apparent or potential conflicts of interest with respect to this assignment;

Therefore, for the above stated reasons participant makes the following representations to Robert L. Cloud Associates:

1. Participant has not engaged in previous work or business involved with or related to the engineering or design of the Diablo Canyon Nuclear Power Plant;

2. Neither participant, nor any member of his or her immediate family, own any beneficial interest in the Pacific Gas & Electric Company, including but not limited to common or preferred stock, bonds or other securities issued on behalf of the Pacific Gas & Electric Company;

3. None of the members of participant's immediate family are employed by Pacific Gas and Electric Company;

4. Continuing financial ties to any company previously involved with or related to the engineering or design of the Diablo Canyon Nuclear Power Plant noted below.

This statement is based on the participant's best information and belief and all exceptions to the representations contained herein have been described below.

David Wang 2/10/82
Name/Date

Exceptions:

STATEMENT REGARDING POTENTIAL OR APPARENT CONFLICTS OF INTEREST

To: Robert L. Cloud Associates

Whereas, the undersigned understands that he is being assigned as a participant to provide services to Pacific Gas and Electric Company with respect to the Design Verification Program for the Diablo Canyon Nuclear Power Plant - Unit I; and

Whereas, participant understands that it is necessary that he be screened for any apparent or potential conflicts of interest with respect to this assignment;

Therefore, for the above stated reasons participant makes the following representations to Robert L. Cloud Associates:

1. Participant has not engaged in previous work or business involved with or related to the engineering or design of the Diablo Canyon Nuclear Power Plant;

2. Neither participant, nor any member of his or her immediate family, own any beneficial interest in the Pacific Gas & Electric Company, including but not limited to common or preferred stock, bonds or other securities issued on behalf of the Pacific Gas & Electric Company;

3. None of the members of participant's immediate family are employed by Pacific Gas and Electric Company;

4. Continuing financial ties to any company previously involved with or related to the engineering or design of the Diablo Canyon Nuclear Power Plant noted below.

This statement is based on the participant's best information and belief and all exceptions to the representations contained herein have been described below.

Gilbert J. Madrid 1-31-82
Name/Date

Exceptions:

STATEMENT REGARDING POTENTIAL OR APPARENT
CONFLICTS OF INTEREST

To: Robert L. Cloud Associates

Whereas, the undersigned understands that he is being assigned as a participant to provide services to Pacific Gas and Electric Company with respect to the Design Verification Program for the Diablo Canyon Nuclear Power Plant - Unit I; and

Whereas, participant understands that it is necessary that he be screened for any apparent or potential conflicts of interest with respect to this assignment;

Therefore, for the above stated reasons participant makes the following representations to Robert L. Cloud Associates:

1. Participant has not engaged in previous work or business involved with or related to the engineering or design of the Diablo Canyon Nuclear Power Plant;

2. Neither participant, nor any member of his or her immediate family, own any beneficial interest in the Pacific Gas & Electric Company, including but not limited to common or preferred stock, bonds or other securities issued on behalf of the Pacific Gas & Electric Company;

3. None of the members of participant's immediate family are employed by Pacific Gas and Electric Company;

4. Continuing financial ties to any company previously involved with or related to the engineering or design of the Diablo Canyon Nuclear Power Plant noted below.

This statement is based on the participant's best information and belief and all exceptions to the representations contained herein have been described below.

Paul H. Anderson / 12-31-82
Name/Date

Exceptions:

1. Robert L. Cloud Associates: Systems Interaction Program
2. Westinghouse Electric Corp. Inc. stock
3. Westinghouse Electric Corp. Inc: Hosgri Analysis of Spent Fuel Pool and Manipulator Cranes.

STATEMENT REGARDING POTENTIAL OR APPARENT
CONFLICTS OF INTEREST

To: Robert L. Cloud Associates

Whereas, the undersigned understands that he is being assigned as a participant to provide services to Pacific Gas and Electric Company with respect to the Design Verification Program for the Diablo Canyon Nuclear Power Plant - Unit I; and

Whereas, participant understands that it is necessary that he be screened for any apparent or potential conflicts of interest with respect to this assignment;

Therefore, for the above stated reasons participant makes the following representations to Robert L. Cloud Associates:

1. Participant has not engaged in previous work or business involved with or related to the engineering or design of the Diablo Canyon Nuclear Power Plant;

2. Neither participant, nor any member of his or her immediate family, own any beneficial interest in the Pacific Gas & Electric Company, including but not limited to common or preferred stock, bonds or other securities issued on behalf of the Pacific Gas & Electric Company;

3. None of the members of participant's immediate family are employed by Pacific Gas and Electric Company;

4. Continuing financial ties to any company previously involved with or related to the engineering or design of the Diablo Canyon Nuclear Power Plant noted below.

This statement is based on the participant's best information and belief and all exceptions to the representations contained herein have been described below.

Dennis Lee Lang 1/31/82
Name/Date

Exceptions:

Robert L. Cloud Associates: Systems Interaction Program

STATEMENT REGARDING POTENTIAL OR APPARENT
CONFLICTS OF INTEREST

To: Robert L. Cloud Associates

Whereas, the undersigned understands that he is being assigned as a participant to provide services to Pacific Gas and Electric Company with respect to the Design Verification Program for the Diablo Canyon Nuclear Power Plant - Unit I; and

Whereas, participant understands that it is necessary that he be screened for any apparent or potential conflicts of interest with respect to this assignment;

Therefore, for the above stated reasons participant makes the following representations to Robert L. Cloud Associates:

1. Participant has not engaged in previous work or business involved with or related to the engineering or design of the Diablo Canyon Nuclear Power Plant;

2. Neither participant, nor any member of his or her immediate family, own any beneficial interest in the Pacific Gas & Electric Company, including but not limited to common or preferred stock, bonds or other securities issued on behalf of the Pacific Gas & Electric Company;

3. None of the members of participant's immediate family are employed by Pacific Gas and Electric Company;

4. Continuing financial ties to any company previously involved with or related to the engineering or design of the Diablo Canyon Nuclear Power Plant noted below.

This statement is based on the participant's best information and belief and all exceptions to the representations contained herein have been described below.

Edward Denison 2/10/82
Name/Date

Exceptions:

Robert L. Cloud Associates: Systems Interaction Program

Charles Denison (father) owns 63 shares of PG&E stock.

STATEMENT REGARDING POTENTIAL OR APPARENT
CONFLICTS OF INTEREST

To: Robert L. Cloud Associates

Whereas, the undersigned understands that he is being assigned as a participant to provide services to Pacific Gas and Electric Company with respect to the Design Verification Program for the Diablo Canyon Nuclear Power Plant - Unit I; and

Whereas, participant understands that it is necessary that he be screened for any apparent or potential conflicts of interest with respect to this assignment;

Therefore, for the above stated reasons participant makes the following representations to Robert L. Cloud Associates:

1. Participant has not engaged in previous work or business involved with or related to the engineering or design of the Diablo Canyon Nuclear Power Plant;

2. Neither participant, nor any member of his or her immediate family, own any beneficial interest in the Pacific Gas & Electric Company, including but not limited to common or preferred stock, bonds or other securities issued on behalf of the Pacific Gas & Electric Company;

3. None of the members of participant's immediate family are employed by Pacific Gas and Electric Company;

4. Continuing financial ties to any company previously involved with or related to the engineering or design of the Diablo Canyon Nuclear Power Plant noted below.

This statement is based on the participant's best information and belief and all exceptions to the representations contained herein have been described below.

Shen-Ho Huang Feb. 10, 82
Name/Date

Exceptions:

SIZE AND TECHNICAL QUALIFICATIONS OF REVIEW TEAM

Robert L. Cloud Associates, Inc.

ROBERT L. CLOUD

PRINCIPAL

Professional Resume

Education

Texas A & M College	BSME	1956
Texas A & M College	MSME	1957
Univ. of Pittsburgh	Phd ME	1964

Experience

1979 to Present: Robert L. Cloud Associates, Inc., Berkeley, Ca. Design Criteria, Seismic design and analysis, Piping design criteria, Piping analysis, Project management, Failure analysis

1978-1979: Engineering Decision Analysis Co., Palo Alto, Ca., Exec. Vice President. Project management, Design criteria, Failure analysis, Piping and Mech. Equipment design and analysis.

1971-1978: Westinghouse Electric Corp., PWR Systems Division; Manager of Mechanic and Materials Technology. Responsible for design criteria, stress and dynamic analysis and materials engineering for the primary system of Westinghouse Pressurized Water Reactor Systems.

1969-1971: Teledyne Materials Research, Waltham, Mass. Manager Analytical Engineering, Design criteria, Analysis and research on equipment and piping, Failure analysis.

1962-1969: Westinghouse Electric Corp., Bettis Atomic Power Lab. Stress Analysis Engineer to Manager, Mechanics and Materials Engineering, Design criteria, Fracture Mechanics Studies, Analysis and research on pressure vessels and piping.

1957-1962: Westinghouse Electric Corp., Large Rotating Apparatus Division. Stress analysis and development work on large central station turbo-generators.

1956-1957: Texas A & M University Instructor, Mechanical Engineering.

Membership

1. American Society of Mechanical Engineers
   a) Past Chairman, Design and Analysis Committee, PVP Division
   b) Past Chairman, Pressure Vessels and Piping Division
   c) Past Member, ASME Boiler and Pressure Vessel Code, Subgroup on Openings and Attachments

2. Past member, Pressure Vessel Research Committee, WRC

Lectures

1. Eisenment Lectures, Fracture Control, 1970, American Society for Metals, Philadelphia, Pa.

2. Teledyne Materials Research
   ASME Boiler and Pressure Vessel Code Seminar
   a) Brittle Fracture
   b) Nozzles, Tubesheets, & Special Problems
   c) Plastic Limit Analysis

3. Principal Division F. Lecture, "Structural Mechanics Applied to Pressurized Water Reactor Systems", 4th International Conference on Structural Mechanics in Reactor Technology, San Francisco, California, 1977.

Publications

"Minimum Weight Design of a Radial Nozzle in a Spherical Shell,: Transactions of the ASME, Journal of Applied Mechanics, Vol. 32, Series E. No. 2, June, 1965.

"The Limit Pressure of Radial Nozzles in Spherical Shells" Nuclear Structural Engineering, Vol. 1, No. 4, April 1965.

"Interpretive Report on Pressure Vessel Heads:, Welding Research Council, Bulletin No. 119, January 1967.

"Approximate Analysis of the Plastic Limit Pressure of Nozzles in Cylindrical Shells" with E.C. Rodabaugh, Transactions of the ASME, Journal of Engineering for Power, Vol. 90, Series A, No. 2, April 1968.

Thermal Buckling and Frictional Effects on Postbuckling Behavior of Sealed Electric Liners" with J.H. Dittmar, Transactions of the ASME, Journal of Engineering for Industry, Vol. 90, Series B, No. 3, August, 1968.

"Assessment of the Plastic Strength of Pressure Vessel Nozzles" with E. C. Rodabaugh, Transactions of the ASME Journal of Engineering for Industry, Vol. 90, Series B, N. 4, November, 1968.

"Evaluation of Experimental and Theoretical Data on Radial Nozzles in Pressure Vessels" with E. C. Rodabaugh, R. J. Atterbury, and F. J. Witt, U.S. Atomic Energy Commission, TID - 24342, 1968.

"Proposed Reinforcement Design Procedure for Radial Nozzles in Cylindrical Shells with Internal Pressure" with E. C. Rodabaugh, Welding Research Council Bulletin No. 133, September 1968.

"Fracture Mechanics Criteria for the Prevention of Brittle Fracture in Nuclear Reactor Vessels," 1967, (Classified) with others, Bettis Atomic Power Lab., Westinghouse Electric Corporation.

"Pressure Vessel Head Design" chapter in "The Stress Analysis of Pressure Vessels and Pressure Vessel Components" Editor, S. S. Gill, Pergamon Press, 1970.

"Fracture Prevention in Nuclear Plants" ASM Conference on Fracture Control, Philadelphia, Pennsylvania, 1970.

Editor, "Pressure Vessels and Piping: Design and Analysis", 2 Vol., American Society of Mechanical Engineers, 1972.

"Dynamic Analysis of Nonlinear Pipe Whip Restraints" with S. Palusamy, and W. L. Patrick, Pressure Vessels and Piping Conference, Miami Beach, Florida, June 1974.

"Nonlinear Seismic Analysis of the Ice Condenser System" with W. S. LaPay, A. J. Soroka, and G. J. Bohm,

"Dynamic Analysis of Structures with Solid-Fluid Interaction" with R. R. Pedrido, A. N. Nahavandi, Transactions of the 4th International Conference on Structural Mechanics in Reactor Technology (Smirt-4), San Francisco, California, August, 1977.

"Structural Mechanics Applied to Pressurized Water Reactor Systems", Vol. 46, No. 2, Nuclear Engrn. & Design, April, 1978.

"Dynamic Events in Nuclear Reactors", Survival of Mechanical Systems in Transient Environments, T. L. Geers et al, Editors, ASME AMD-Vol. 36, 1979.

"Creep Instability in Flexible Piping Joints" with R. D. Campbell and D. Bushnell, 1980. To be published.

"Seismic Performance of Piping in Past Earthquakes:, Specialty Conference on Civil Engineering and Nuclear Power, September 1980, Knoxville, Tenn.

Robert L. Cloud Associates, Inc.

P.C. CHEN

Principal Associate

Professional Resume

Education

B.S. Civil Engineering - National Cheng Kung University, Taiwan - 1961

M.S. Structural Engineering - Vanderbilt University Tennessee - 1964

PhD Applied Mechanics - University of California, Berkeley - 1971

Cert. Business Management - Golden Gate University San Francisco - 1977

Experience

1981 to Present: Robert L. Cloud Associates, Inc.
Principal Associate

1978 to 1981: Frederiksen Engineering Co., Inc., Oakland, CA

Manager of Engineering Mechanics and Applications Department. Responsible for all activities in engineering mechanics and application and business development.

Performed failure analysis and re-design of a spray dryer at elevated temperatures.

Evaluated the design of hot-tire support systems for a rotary dryer at elevated temperatures. The evaluation included fatigue, heat, and vibration analyses.

Seismic restraint analysis and design of storage racks, electrical panels and mechanical equipment.

Seismic, wind and pressure analyses of silos and stiffened panels.

Seismic and wind analyses of timber domes and concrete support walls of grain storage facilities using finite element methods.

Seismic analysis and design of industrial steel storage racks.

Performed preliminary study of underground earthquake motions using downhole earthquake data.

1978-1979: University of California, Berkeley, CA. Lecturer in Engineering

1971-1978: Bechtel National, Inc., San Francisco, CA. Supervisor, Engineering Specialist, and Project Engineer, Research and Engineering.

Responsible for supervision of company funded technical development programs and direction and coordination of structural and dynamic analyses or research performed.

Research studies included seismic analyses of containment structures, fluid sloshing in tanks during earthquake, simplified dynamic analysis procedures for complicated three dimensional structures, efficient methods of dynamic analysis and for seismic design of nuclear containment strucutres, dynamic response of pile foundations, generation of equipment response spectra directly from design spectra using random vibration theory, piping seismic design with energy-absorbing dampers and evaluation of conservatism in seismic design of structures.

Performed seismic analyses of nuclear power plants and underground radioactive waste tanks, dynamic analysis of reactor vessel support structures to blast loadings, seismic analysis of reactor vessel and equipment, and tanks containing fluid.

Responsible for finite-element soil-structure seismic analysis of underground nuclear facilities, construction of response spectra for buildings with uncertain structural properties, and finite element analysis of site liquefaction potential including structural dynamic effects.

Developed seismic design criteria for underground nuclear waste isolation and repository facilities.

Wind analysis of hyperbolic cooling towers.

Member of Bechtel's Seismic Committee which is responsible for establishing corporate seismic design procedures.

1965-1971: John A. Blume and Associates, San Francisco, CA. Structural Dynamic and Research Engineer. Performed numerous seismic analyses for nuclear power plants

and equipment built in the United States and foreign countries. Carried out research projects for studying the dynamic response and damage predictions of structures to underground nuclear explosions and sonic booms.

Professional Society Memberships:

ASCE, ASME, Earthquake Engineering Research Institute, American Academy of Mechanics, Reviewer of the Applied Mechanics Review.

Publications:

Chen, P.C. and Soroka, W.W., "Correlation Technique for Transient Response of a Hysteretically-Damped Dynamic System to Stationary Random Excitation," Journal of Sound and Vibration, Vol. 22, 1972.

Chen, P.C. and Soroka, W.W., "Impulse Response of a Dynamic System with Statistical Properties," Journal of Sound and Vibration, Vol. 22, 1973.

Chen, P.C. and Soroka, W.W., "Multi-Degree Dynamic Response of a System with Statistical Properties," Journal of Sound and Vibration, Vol. 37, 1974.

Chen, P.C. and Soroka, W.W., "Response of Multi-Degree Dynamic System with Statistical Properties," Prodeedings of the ASCE-EMD Specialty Conference on Probabilistic Methods in Engineering, Stanford University, June, 1974.

Chen, P.C. "Floor Response Spectra of Buildings with Uncertain Structural Properties," Proceedings of the U.S. National Conference on Earthquake Engineering, Ann Arbor, June, 1975.

Chen, P.C. et al, "Soil-Structure Interaction of Buried Structure," Proceedings of Second ASCE Speciality Conference on Structural Design of Nuclear Plant Facilities, New Orleans, December, 1975.

Chen, P.C. and Barber, R.B., "Seismic Design of Liquid Storage Tanks," Proceedings of International Symposium on Earthquake Structural Engineering, St. Louis, August, 1976.

Chen, P.C., "Probabilistic Structural Dynamics in Seismic Analysis of Nuclear Power Plants, "Proceedings of International Seminar on Probabilistic and Extreme Load Design of Nuclear Plant Facilities, August, 1977.

Chen, P.C. and G.W. Brown, Random Vibration, to be published.

Chen, P.C. and Chen, J., "Generation of Floor Response Spectra Directly from Free-Field Design Spectra," Proceedings of Second International Conference on Microzonation, San Francisco, CA, November 26-December 1, 1978.

Chen, P.C. and Chen, J., "The Use of Extreme Value Theorum in Generating Floor Response Spectra," Proceedings of Second ASCE Specialty Conference on Probabilistic Mechanics and Structural Reliability, Tucson, Arizona, January 10-11, 1979.

Chen, P.C. et al, "Consideration of Dynamic Stress Concentrations in the Seismic Analysis of Buried Structures," Proceedings of Second U.S. National Conference on Earthquake Engineering, Stanford, CA, August, 1979.

Chen, P.C., "A Unified Approach to the Seismic Analysis of Buildings and Equipment," Proceedings of Seventh World Conference on Earthquake Engineering, Ankara, Turkey, September 8-13, 1980.

Chen, P.C., "Underground Earthquake Environment and Soil-Structure Interaction," Panel on Soil-Structure Interaction, 101st Winter Annual Meeting, ASME, November, 1980, Chicago, Illinois.

Robert L. Cloud Associates, Inc.

SHEN-HO TZUANG

Senior Associate Engineer

Professional Resume

Education

Rice University, Houston, Texas, PhD in Civil Engineering, May 1981.

National Cheng-Kung University, Taiwan, M.S. in Civil Engineering, June 1970.

National Cheng-Kung University, Taiwan, B.S. in Civil Engineering, June 1966.

Experience

October 1981 to Present: Robert L. Cloud Associates, Inc., Berkeley, California, Senior Associate Engineer Responsible for seismic requalification of buildings.

1978 - 1981: Rice University, Houston, Texas, Research Assistant in Structural Dynamics and Vibrations. Used major programs such as SAP 6, SAP 4, STRUDL, TABS 80, NEAB, etc. for Structural Analysis (Statics, Dynamics and/or Vibration). Worked on the development of a new computer program for analyzing the Highway Bridge System subjected to earthquake loading. Stress analysis and design of heavy industrial facilities including both steel and concrete structures. Familiar with dynamic analysis of offshore structures including fatigue analysis. PhD thesis topic: "First-Passage Probabilities for Structures with Stochastic Excitations."

1970 - 1978: National Cheng-Kung University, Taiwan, Lecturer and Associate Professor of Civil Engineering. Taught Structural Dynamics, Matrix Structure Analsyis, Plates and Shells, Structural Design, Engineering Mechanics. Consulted on the structural design of Gymnasium, Tower and high-rise building. Did research on Fracture Mechanics by Finite Element Method.

Honors

Twice received grants from the Chinese National Science Foundation.

Committee on Structural Steel Design of the Board of Registration for Professional Engineers (Taiwan).

Publications

"First-Passage Approximations for Simple Oscillators", with Lutes and Chen, Journal of Engineering Mechanics Division, ASCE, Vol. 106, No. EM 6, pp. 1111-1124.

In preparation, "First-Passage Probabilities for Two-Mode Systems", with Lutes.

Robert L. Cloud Associates, Inc.

STEVEN P. HARRIS

SENIOR ASSOCIATE

Professional Resume

Education

University of California, Berkeley. MSCE 1969

University of California, Berkeley. BSCE 1968

Experience

1982 - Robert L. Cloud Associates, Inc., Berkeley, California, Senior Associate. Engineering consultant providing engineering mechanics, earthquake engineering, design review and project management services to the power and associated heavy industries.

1979 - EDS Nuclear Inc., San Francisco, CA, Manager, Market Analysis. Researched markets and technologies, developed marketing software and supported new product sales through proposals and presentations. Conducted independent technical evaluations of engineering quality for senior management.

1977 - EDS Nuclear Inc., San Francisco, CA, Manager, Project Management Division. Managed Division staff responsible for large multi-disciplinary engineering services contracts to utility and architect-engineer clients. Services encompassed civil, mechanical, field engineering, management consulting and feasibility studies. Established policy, planned and directed schedule, cost control, contract and marketing functions.

1975 - EDS Nuclear Inc., San Francisco, CA, Project Manager. Managed large engineering services contracts to a utility client. Coordinated all client marketing, contracts and proposals. Planned, scheduled and coordinated multi-disciplinary engineering activities including civil, structural, piping, mechanical, equipment and field engineering. Presented testimony before regulatory agencies.

1971 - EDS Nuclear Inc., San Francisco, CA, Project Engineer. Directed numerous civil, structural and mechanical design and analysis projects. Planned and supervised work of project technical groups and maintained client contact.

1969 - Litton Systems, Ingalls West Division, El Segundo, CA, Senior Engineer. Developed computer programs involving structures, hydrodynamics and data base management integrated with automated graphics and numerical machine control systems. Managed vendor subcontracts. Participated in economic and engineering feasibility studies.

Professional Affiliations

American Nuclear Society

Structural Engineers Association of Northern California

American Society of Civil Engineers

Registered Civil Engineer, State of California

Robert L. Cloud Associates, Inc.

JAMES S. M. LEUNG

Associate

Professional Resume

Education

University of California at Davis, BSME in Mechanical Design, 1971; MSME in Applied Mechanics, 1973; University of Santa Clara, Graduate Studies in Finite Element Methods and Random Vibrations.

Experience

Present: Robert L. Cloud Associates, Inc., Stress analysis and finite element modeling of nuclear components, dynamic analysis of pipe deformations, dynamic plasicity.

1973-1980: Westinghouse Electric Corporation. MX Engineering Department, Senior Engineer: Dynamic Analysis Lead, directed the analytical studies for the Air Force MX Weapon System. Developed analysis models and computer programs for ground motion dynamic response analysis, transportation analysis, trajectory analysis, and launch simulations. Conducted structural, thermal, and modal analyses using finite element techniques. Developed mathematical models and performed design and analysis of shock isolation systems; nonlinear material modeling and testing.

Missile Launching and Handling Department, Engineer: Design and analysis of handling equipment, surface and underwater test structures, and submarine launchers. Vibration analysis and testing of launch control equipment. Thermal and heat transfer analysis of electronic packaging. Dynamic and stress analysis of turbine blades and composite structures. Fracture Mechanics and material evaluations.

Membership

American Society of Mechanical Engineers

Reports, Projects

1. Stress Analysis of C3/C4 Launch Tube Closures
2. Thermal Analysis of Trident Launch Control Equipment

3. Dynamic Analysis of C4 Launch Tube Subjected to Conventional and Nuclear Underwater Blasts

4. Structural Analysis of SUPLS - Simulated Underwater Partial Launch System

5. Advanced Development Program for Air Force MX Missile Weapon System

6. Shock Analysis of Trident D5 Launch System

7. Stress Analysis of Missile Handling Equipment

8. Nuclear Ground Response Analysis for MX Vertical Shelter Weapon System

9. Dynamic Analysis of MX Mobile Weapon System

10. Launch Simulation for MX Horizontal Shelter Weapon System

11. Safety Evaluation of Peashooter Test Program

12. Trajectory and Launch Interaction Analysis of Silo Missile Launch

13. Spectrum Analysis of Silo Ground Shock Motions.

14. System Definition Program for Air Force MX Missile Weapon System

15. Evaluation of Dynamic Plasticity and its Applications to ASME Code

16. Structural Dynamic of TMI Reactor Vessel Subjected to Internal Hydrogen Detonation

17. Mathematical Modeling and In-Situ Model Testing of Cable Tray Systems

18. State-of-the-Art Assessment of Dynamic Analysis using Non-linear Finite Element Computer Programs

Robert L. Cloud Associates, Inc.

DAVID WONG

Engineer

Professional Resume

Education

Stanford University, Stanford, California. MS in Civil/ Structural Engineering, 1981.

University of Hawaii at Manoa, Honolulu, Hawaii. BS in Civil Engineering 1980.

Experience

Starting November 1981: Robert L. Cloud Associates, Inc., Berkeley, California, Civil Engineer.

August 1981 - November 1981: Alameda County Flood Control and Water Conservation District, Livermore, California. Responsible for water resources management in the Livermore-Amador Valley. Activities include groundwater and surface water monitoring; groundwater basin management; water importation, treatment and distribution; and other related activities. Involved in water supply planning, design and construction, water resources investigation and monitoring.

September 1979 - May 1980: Department of Civil Engineering, University of Hawaii, Honolulu, Hawaii. Responsible for setting up experiments, directing students in the laboratory of the course "Mechanics of Materials"; grading student laboratory reports, and office consultation.

September 1978 - May 1980: Kokua Office, University of Hawaii, Honolulu, Hawaii. Responsible for counseling, tutoring, and academic advising of first and second year college students. Supervised the studies of military personnels from Pearl Harbour Naval Base. Tutored in the subjects of mathematics, physics, computer science and statics.

Membership

American Society of Civil Engineers, Student Member

Structural Engineers Association of N. Calif., Student Member

National Society of Professional Engineers, Student Member

Robert L. Cloud Associates, Inc.

PAUL H. ANDERSON

Engineer

Professional Resume

Education

North Carolina State University, B.S. Engr. Sci. & Mech. 1977.

Experience

October 1980 to Present: Robert L. Cloud Associates, Inc.
Engineer: General finite element analysis, stress analysis and seismic qualification of piping systems and mechanical equipment.

1980: Bechtel Power Corporation
Engineer: Stress analysis of Nuclear Class I, II piping systems.

1977-1980: Westinghouse Electric Corp. Nuclear Technology Division.
Engineer: Design and analysis of nuclear Category I concrete buildings, stress analysis of all classes nuclear piping systems, nuclear primary equipment support design and analysis, mechanical equipment qualification.

Publications

"Seismic Analysis of Category I Crane Structures", by P.H. Anderson, T. H. Liu, F. Loceff, 5th International Conference on Structural Mechanics in Reactor Technology, Berlin,1979.

"WECAN Modal Superposition Method for Seismic Analysis of Category I Crane Structures", by P. H. Anderson, F. Loceff, Proceedings of Fourth WECAN Users' Colloquinm, 1979.

Reports & Projects

1. Strucutral Analysis of Reactor Building Interior Concrete (Napot Point).

2. Structural Analysis of Category I Buildings (Napot Point).

3. Design and Analysis of Steel Superstructures (Napot Point).

4. Design and Analysis of Fuel Handling Crane, Manipulator Crane, and Polar Crane (Diablo Canyon).

5. Analysis of Primary Equipment Supports (WATTS BAR).

6. Stress Analysis of Nuclear Piping Systems (GINNA PLANT).

7. Stress Analysis of Nuclear Class I Piping Systems (SNUPPS).

Robert L. Cloud Associates, Inc.

HANSON K. LOEY

ENGINEER

Professional Resume

Education

University of California, Berkeley BSME 1981

Experience

July 1981 - Present: Robert L. Cloud Associates, Inc. Berkeley, Ca.; Finite Element Analysis, Structural Analysis, Failure Investigation, Seismic Analysis, Piping Analysis.

Summer 1980: Hughes Aircraft Co., Fullerton, California; Co-op Student Engineer: Finite element modeling and analysis using NASTRAN, assisted in computer analysis of dynamic properties of various ground vehicle and ship mounted radar antennas, performed preliminary structural design analysis of ground vehicle mounted components.

January 1979: Hughes Aircraft Co., Fullerton, California; Co-op Student Engineer: Finite element modeling and analysis using NASTRAN, coordinated environmental qualification tests, wrote test reports, performed weight/mass properties studies, studied effectiveness of composite armor, performed various mechanical analysis studies.

Membership

Pi Tau Sigma

American Society Mechanical Engineers

Society of Automotive Engineers

Robert L. Cloud Associates, Inc.

EDWARD T. DENISON

ENGINEER

Professional Resume

Education

Columbia University BSCE 1981

Experience

May 1981: Robert L. Cloud Associates, Inc., Berkeley, CA
Structural and Seismic Analysis, Piping Analysis, Finite Element Analysis

Membership

American Society Civil Engineers

Robert L. Cloud Associates, Inc.

DAO Q. LE

Senior Associate

Professional Resume

Education

University of California, Berkeley - M. Engr. in Structural Engineering and Structural Mechanics June 1979

University of California, Berkeley - M. S. in Structural Engineering and Structural Mechanics June 1976

University of Tennessee, Knoxville - B. S. in Structural-Civil Engineering December 1972

W. J. Bryan College, Dayton, Tennessee - B. A. in Mathematics May 1971

Experience

4/77 - 9/81: General Electric Company, San Jose, CA, Engineer-Consultant; Performed seismic analysis and design modification of Morris Nuclear Spent Fuel Storage Basin. Performed a soil-structure interaction study for nuclear power plant using 3-D solid finite elements. Analyzed High Density Fuel Storage Systems (HDFSS) to determine impact and sliding due to earthquake excitation and evaluated stresses of related supporting components for Brown Ferry N. P., Monticello N. P., Tarapur N. P., and Kuosheng N. P. Analyzed a piping system and its supports to determine its adequacy with respect to ANSI B31.1 Code.

6/76 - 3/77: EDS Nuclear, Principal Engineer; Performed thorough check of a general purpose computer program for piping analysis (SUPERPIPE) for correctness. The check involved performance of static, dynamic (force time history, earthquake time history, response spectra, and multiple support excitation) analyses in conjunction with design check (load combination, thermal transient, fatigue evaluation, etc.) to meet the requirements of ASME Code Section III, Subsection NB and NC 3600. Performed a comparative study of soil-structure interaction analyses of a nuclear power plant using program SAP-IV and program FLUSH.

9/75 - 9/76: University of California, Berkeley, CA, Research Assistant; Employed in Department of Civil Engineering, Structural Engineering and Structural Mechanics. Finite Element Computer Programming for Shear Wall Structures.

1973 - 1975: Duke Power Company, Charlotte, N. C., Engineer Associate; Analyzed and design cylindrical steel containment shell with ring stiffeners subjected to static, seismic and loss of coolant accident (LOCA) loads for Cattawba Nuclear Station; also involved design of reinforcement for penetration openings in the containment shell following ASME Code, in addition to design of

anchorage system. Analyzed and designed support components for the Nuclear Steam Supply Systems (Reactor Vessel, Steam Generator, Pressurizer, Reactor Coolant Pump) using ASME Code, Section III. Wrote Specfications. The work involved extensive use of the Finite Element Method and Computer Programs available in the Public domain in the analysis phase. In the design phase an understanding of the committments to design criteria and the ASME Code is essential.

1972 - 1973: Tennessee Valley Authority, Knoxville, TN, Civil Engineer; Prepared design calculations for a reinforced concrete containment structure subjected to static and wind loads for the Bellefonte Nuclear Station. Analyzed large opening (Equipment Hatch) in a prestressed cylindrical containment shell.

Presentations/Publications

"Verification Manual for Computer Program GENFEM", a general purpose finite element code of over 70 element types, AEC, Sweden, 1981.

"Application of Minicomputer to Structural Engineering Training and Practices", SESM Report, U. C. Berkeley, 1979.

"Program SUBWALL: Finite Element Analysis of Structural Walls", ACI Journal, No. 6, June 1979.

"Verification Manual for Computer Program FLUSH", EDS Nuclear, 1977.

"Verification Manual for Computer Program SUPERPIPE", EDS Nuclear, 1977.

"Special Purpose Finite Element Computer Program for Practical Elastic Analysis and Design of Structural Walls with Substructure Option", EERC Report 77/09, U. C. Berkeley, 1977.

"Verification Manual for Computer Program STRUDL", Duke Power Co., 1975.

"Analytical Techniques Used in Design of Nuclear Steel Containments", ASCE Conference on Nuclear Containments, Chicago, December 1974.

Robert L. Cloud Associates, Inc.

KENNETH R. JAQUAY

Consultant

Professional Resume

Education

Virginia Polytechnic Institute and State University
M. S., Applied Mechanics 1973

Virginia Polytechnic Institute and State University
B. S., Applied Mechanics 1971

Experience

5/81 to Present: Rockwell International - Energy Systems Group, Canoga Park, CA, Manager, Piping Stress and Technology Unit. Responsible for managing final stress evaluations of CRBR auxiliary piping systems and DOE funded piping base technology tasks. Drafted ASME B&PV Code Case revisions as part of continual interface with ASME Section III rules committees. Developing code rules for design of elevated temperature nuclear piping. Directing activities on development of quantitative criteria for prediction of thermal mixing damage on upper reactor core components. Reviewing and upgrading in-house piping analysis methods. Responsible for adding ODT F9-ST constituitive equations to ABAQUS program and correcting errors in NUPIPE Class 1 post-processor.

3/79 - 5/81: General Electric Company, Sunnyvale, CA, Technical Specialist. Instrumental in development of Structural Evaluation Plan for elevated temperature Nucelar Class 1 piping. Performed Code Case 1592 stress assessment of thermal mixing tee. Wrote FORTRAN program for creep-fatigue damage accumulation. Evaluated structural interaction between pipes and pipe clamps. Developed hardware oriented mesh generator program. Performed 3-D nonlinear ANSYS solutions using substructuring methods. Evaluated inelastic creep-fatigue behavior of integral pipe supports. Used 3-D ANSYS solutions to develop component stress indices.

8/79 to Present: ETD Associates, San Jose, CA, Self-employed Stress Consultant. Assessed structural feasibility of advanced flexibility concepts for LMFBR steam generators. Conceptualized rigorous production oriented analytical method for pipe supports base plates.

10/78 - 3/79: EDS Nuclear, San Francisco, CA, Pipe Stress Engineer. Performed production mode Nuclear Class I piping analyses. Upgraded design procedures for modeling valve operators, selecting cyclic stress ranges, and representing tee flexibility.

5/75 - 10/78: Atomics International, Canoga Park, CA, Principle Investigator/Project Engineer. Upgraded industry standards for piping bellows fabrication and analysis. Interfaced with vendors to develop fabrication controls, examination techniques and quality assurance; established accelerated elevated temperature test program to verify upgraded analytical methods; drafted two ASME Code Cases, presented them to ASME Rule Committees and supported evolution through Committee hierarchy.

Assessed conservatism in Nuclear Class I piping design methods. Established sensitivity evaluations of standard design assumptions; performed MARC inelastic piping analyses; directed experimental studies of pipe/pipe clamp interactions, service failure studies and elevated temperature stress indices development.

6/73 - 5/75: Babcock & Wilcox Company, Alliance, Ohio, Senior Research Engineer. Conducted specialty stress evaluations including several SAP 3-D seismic analyses, two SAP based sensitivity studies and three experimental stress analyses. Performed research studies on higher-order finite elements and economic techniques for solution of large finite element problems. Developed several design graphs and designed two specialty products.

Memberships

Society of Sigma Xi, Associate Member

Society of Experimental Stress Analysis, Student Member, 1973

ASME B&PV Rule Committees, Secretary to two Task Forces, 1975-78

PROFFESSOR CHRIS Holley

Dr. M. J. Holley

Resume' to be provided at a
later date.

CIVIL - STRUCTURAL
CONSULTANT

Soils Consultant for follow on verification of Harding-Lawson work/RL

ROBERT L. MCNEILL

GENERAL EXPERIENCE RECORD

of

ROBERT L. McNEILL

(Considerably Abbreviated)

November 1981

EDUCATION

B.S., M.S., Ph.D., in Geotechnical, Structural Engineering and Engineering Mechanics; Minors in Mathematics, Physics, Soil Science.

REGISTRATIONS

Arizona, California, New Mexico, Nevada, New York

BRIEF SUMMARY OF TECHNICAL EXPERIENCE (References to my work are attached)

Recent Work (1975 - Present - Consulting Engineer, in private personal practice.

- Earthquake Engineering
  - Development of design spectra from free-field instrumental recorded data.
  - Prediction of areal effects of earthquakes, emergency planning for earthquake hazards.
  - Detailed studies of severities of severe earthquakes.
  - Development of long-lived (1-3 yr), acoustically queriable, ocean-bottom seismometer; analysis of first strong-motion offshore earthquake records.
- Vibration Engineering
  - Design of many quiet installations for vibration and impact machinery.
  - Amelioration of transmitted vibrations from many existing vibrating and impact machines.

- Geophysical Engineering

  - Detection of underground cavities by remote geophysical means.

- Offshore Engineering

  - Methods to detect clathrates (gas hydrates) in deep-water sediments.

  - Methods to determine soil properties in-situ in deep waters.

  - Geotechnical problems associated with deep-water Tension-Leg and Vertically Moored Platforms (TLP, VMP).

- Other

  - Penetrator technology.

  - Engineering on collapsible soils.

  - Movement potential of old, large landslides.

  - Evaluations of existing, old dams.

  - Restoration of pueblo structures.

- Regulatory and Legal

  - Nuclear reactors, design and analysis, development of design criteria, appearances at NRC-Staff, ACRS, and ASLB hearings.

  - Construction claims (dams, buildings).

Past Work (1953-1975)

- 1970-1975 - President, Woodward-McNeill & Associates.

- 1965-1970 - Director of Special Projects, Woodward-Clyde-Sherard & Associates.

- 1961-1965 - Director of Soil Dynamics, Shock-Tube Facility, University of New Mexico.

  - Consultant, Woodward-Clyde-Sherard & Associates.

- 1957-1961 - Asst. Professor, California State University at San Jose.

  - Consultant, Woodward-Clyde-Sherard & Associates.

- 1953-1957 - Technician, then Staff Engineer, Woodward-Clyde Consultants.

PRIZES and HONORS

- Thomas Fitch Rowland Prize, American Society of Civil Engineers
- Clement T. Wiskocil Prize, University of California at Berkeley
- President, Institute for the Advancement of Engineering
- Member, Society of Sigma Xi
- Tau Beta Pi, Engineering Scholarship Society
- Chi Epsilon, Civil-Engineering Scholarship Society

AFFILIATIONS

American Association for the Advancement of Science
American Consulting Engineers' Council
American Institute of Aeronautics and Astronautics
American Society of Civil Engineers
American Society of Mechanical Engineers
American Society for Testing Materials
Earthquake Engineering Research Institute
Highway Research Board
Marine Technology Society
New Mexico Consulting Engineers' Council
Seismological Society of America
Society of Experimental Stress Analysis
U. S. National Council on Soil Mechanics and Foundation Engineering

PUBLICATIONS

-- On effects of highway dynamic loadings on soil behavior (1957-1961):

"Clay Strength Increase Caused by Repeated Loading," with H. B. Seed and J. DeGuenin, Paper 3018, Vol. 125, Part 1 Trans. ASCE, New York, 1960 (Paper awarded Thomas Fitch Rowland Prize, ASCE, 1961).

"Soil Deformations Under Repeated Stress Applications," with H. B. Seed, STP 156, ASTM, Philadelphia, 1957.

"Soil Deformations in Normal Compression and Repeated Loading Tests," with H. B. Seed, Bulletin 141, HRB, NRC (Pub 433), National Academy of Sciences, Washington, D.C., 1956.

-- On effects of shock (blast) loadings on soil behavior (1962-1966):

"Practical Aspects of Soil Dynamics," SW Section, ASCE, 1962.

"Fundamentals of Soil Shock Dynamics," with R. J. Woodward, Preprint, ASCE National Meeting, 1963.

"Study of the Propagation of Stress Waves in Sand," AFWL-TR-65-180, USAF, 1966 (Doctoral Dissertation).

-- On design aspects of dynamically loaded foundations (1964-1970):

"The Role of Foundations in Earthquake Resistant Design," Colorado Earthquake Research Committee, Boulder, Colorado, 1964.

"The Role of Soil Dynamics in the Design of Stable Test Pads," with B. E. Margason and F. M. Babcock, Proc. 10N-65, American Institute of Aeronautics and Astronautics, New York, 1965.

"Design of Test Pads for Transient Loadings," with B. E. Margason and J. A. Barneich, Paper No. 67-550, American Institute of Aeronautics and Astronautics, New York, 1967.

"Modern Foundation Design for Dynamic Loadings," with B. E. Margason, Proc., SEATO Regional Conf. on Soil Engineering, Bangkok, 1967.

"Design Methods for Transient Response and Isolation of Ground-Founded Microprecision Slabs," with B. E. Margason, F. E. Babcock, and J. A. Barneich, J. Spacecraft and Rockets, Vol. 5, No. 11, American Institute of Aeronautics and Astronautics, New York, Nov. 1968.

"Case Histories in Foundation Vibrations," with B. E. Margason and F. M. Babcock, Proc. STP 450, ASTM, Philadelphia, 1969.

"Machine Foundations: The-State-of-the-Art," Invited Paper, Proc. Specialty Session 2, Seventh Int'l. Conf. on Soil Mechanics and Foundation Engineering, Mexico City, 1969.

"The Geophysical Environment," with V. R. McLamore and J. A. Barneich, Paper No. 70-959, American Institute of Aeronautics and Astronautics, New York, 1970.

-- On penetrators (1967 - Present):

"The Feasibility of Rapid Soil Investigations Using High-Speed, Earth-Penetrating Projectiles," with W. N. Caudle, A. Y. Pope, and B. E. Margason, Proc., Int'l. Symp. on Wave Propagation and Dynamic Properties of Earth Materials, Albuquerque, New Mexico, 1967 (Published additionally by Sandia Laboratories, Albuquerque, New Mexico, as SC-R-68-1736).

"Air-Dropped Earth Penetrators," with B. E. Margason and J. A. Trantina, Consulting Engineer Magazine, New York, April 1969.

"Rapid Penetration of Terrestrial Materials: The State-of-the-Art," Invited Paper, Proc. World Conf. on Rapid Penetration of Terrestrial Materials, ASCE/Sandia Laboratories/TAMU, 1972.

"Enhancement of Geophysical Soil Profiles Using Instrumented Marine Sediment Penetrators," OTC 3526, 1979.

"An Approach for Estimating Soil Attachment During Penetration Events," SAND80-2667C, Sandia National Laboratories, Albuquerque, NM.

"Estimation of In-Situ Clay Strengths Using Marine Sediment Penetrators," with A. D. Foster, Proc., Int'l Conf. on Recent Adv. in Geotechnical Earthquake Engineering and Soil Dynamics, 1981.

"Approximate Method for Estimating the Strengths of Cohesive Materials from Penetrator Decelerations," Vol. 2, Conf. Record, Oceans 81, IEEE/MTS, Boston, September 1981.

-- On geotechnical aspects of reactor design (1973 - Present):

"Soil Structure Interaction - A State-of-the-Art Review," Proc. Structural Engineers Association of California, 1973.

"Experience in Settlement Analysis and Related Geostatic Considerations for the Foundation Design of Heavy Reactor Structures," with B. C. Yen, K. Bhushan, and S. C. Haley, Institution of Civil Engineers, London, 1975.

"Geotechnical Aspects of Interim Near-Surface Storage of Spent Nuclear Fuel," Preprint 3791, Vol. 1, ASCE, N.Y., 1979.

-- On offshore geotechnical engineering (1978 - Present):

"Stereoscopic X-Ray Assessment of Offshore Soil Samples," with R. L. Allen and B. C. Yen, OTC 3212, 1978.

"Concepts for a Shear-Normal Gauge to Estimate In-Situ Soil Strength and Strength Angle," with S. L. Green, STP 740, ASTM, Philadelphia, 1981.

"In-Situ Measurements of Pore Pressure," with E. W. Reece, Proc., Int'l Conf. on Recent Adv. in Geotechnical Earthquake Engineering and Soil Dynamics, 1981.

-- On earthquake engineering (1974 - Present):

"Soil-Structure Interaction Parameters for Seismic Design of Nuclear Power Stations," with J. A. Barneich and D. H. Johns, Preprint 2182, ASCE, New York, 1974.

"Long-Term Measurements of Ground Motions Offshore," with E. W. Reece and D. E. Ryerson, Proc., Int'l Conf. on Recent Adv. in Geotechnical Earthquake Engineering and Soil Dynamics, 1981.

"Some Possible Errors in Recorded Free-Field Ground Motions," Internal Memorandum, Div. 4752, Sandia National Laboratories, Albuquerque, NM, August 1981.

REFERENCES

Contact is encouraged

References for Recent Work (1975 - Present)

- Earthquake Engineering

  - Dr. I. M. Idriss, Woodward-Clyde Consultants, (415) 956-7070
  - Mr. L. T. Wight, Tera, Inc., (415) 845-5200
  - Mr. M. Medford, Southern California Edison Co., (213) 572-1749
  - Dr. K. McNally, Calif. Inst. Technology, (213) 356-6972
  - Dr. D. Hadley, Sierra Geophysics, (206) 881-8833

- Vibration Engineering

  - Dr. R. D. Woods, Univ. Michigan, (313) 764-4303
  - Mr. J. A. Barneich, Woodward-Clyde Consultants, (213) 581-7164
  - Mr. R. D. Booth, Sergent-Hauskins-Beckwith, (505) 884-0950
  - Dr. B. C. Yen, Bing Yen & Associates, (714) 842-1168

- Geophysical Engineering

  - Mr. J. Yann, Southern California Edison Co., (213) 572-3327
  - Mr. L. Hersch, Bechtel Power Corp., (213) 946-1811 (x 366)
  - Dr. H. M. Ewoldson, Woodward-Clyde Consultants, (415) 956-7070

- Offshore Engineering

  - Dr. T. Edgar, USGS-Office of Marine Geology, (703) 860-7241
  - Mr. R. Bea, Woodward-Clyde Consultants, (713) 688-9111
  - Dr. H. Olsen, USGS, Geotechnical Engrg Div., (303) 234-4717

- Other

  - Penetrator Technology

    Mr. M. Newsom, Sandia National Laboratories, (505) 844-6867

  - Collapsible Soils

    Mr. L. D. Mills, Kern County Dept. Publ. Wks, (805) 861-2487

  - Old, large landslides

    Mr. R. Shanman, Dames & Moore, (213) 879-9700

  - Evaluation of old dams

    Mr. Wm Clevenger, Consulting Engineer, (206) 683-7888

  - Restoration of pueblo structures

    Mr. R. E. Holt, Randy Holt & Assoc., (505) 265-5823

- Regulatory and Legal

  - Nuclear Reactors

    - Mr. K. Baskin, Southern California Edison Co., (213) 572-1401
    - Mr. F. Brady, PGE, (415) 781-4211 (x 3309)
    - Dr. J. Frazier, Delta Assoc., (714) 481-9292
    - Mr. G. Hunt, Rockwell International, (509) 373-2342
    - Mr. D. Piggott, Esq., Orrington Law Firm, (415) 392-1122

  - Claims

    - Mr. Wm Stewart, Consulting Engineer, (206) 885-0666
    - Mr. Wm Kuhs, Esq., Wm Kuhs Assoc., (805) 322-4004
    - Mr. D. McCrory, Esq., Monteleone & McCrory, (213) 937-1533
    - Mr. C. H. Esbeck, Esq., Rodey Law Firm, (505) 765-5900

- Miscellaneous

  - Ability to interface with geologists

    - Mr. J. Smith, Jay Smith & Assoc., (213) 595-5795
    - Mr. E. Heath, Woodward-Clyde & Assoc., (714) 835-6886
    - Dr. B. Leighton, Beach Leighton & Assoc., (714) 556-1421
    - Mr. P. J. West, Southern California Edison Co., (213) 572-3261

  - Ability to interface with geophysicists

    - Mr. D. Leeds, David Leeds & Assoc., (213) 472-0282
    - Mr. D. Moore, Nekton, Inc., (714) 453-0337
    - Mr. L. Oriard, Consulting Geophysicist, (714) 846-0325

  - General Character and Technical Background

    - Dr. H. Bolton Seed, Univ. Calif. Berkeley, (415) 642-1262
    - Dr. R. V. Whitman, MIT, (617) 253-7127
    - Dr. Wm J. Hall, Univ. Ill., (217) 333-3927
    - Dr. F. E. Richart, Univ. Mich., (313) 763-2146
    - Mr. H. Ray, Southern California Edison Co., (213) 572-3763
    - Mr. L. S. Cluff, Woodward-Clyde Consultants, (415) 956-7070
    - Mr. J. H. Scott, Sandia National Laboratories, (505) 844-8031
    - Dr. A. Mahmood, McClelland Engineers, (713) 772-7301

<u>References to Past Work (1953 - 1975)</u>

- Woodward-Clyde Group of Companies

  - Mr. Richard J. Woodward, (415) 434-1955
  - Mr. Eugene B. Waggoner, (408) 274-6446

- Shock-Tube Facility, Univ. New Mexico

  - Dr. E. M. Zwoyer, (212) 752-6800
  - Mr. D. Calhoun, (505) 844-5189

- California State University

  - Prof. Dr. Wm Lorell, (408) 277-2488

Robert L. Cloud Associates, Inc.

DIPANKAR CHATTERJI

Consultant

Professional Resume

Education

University of Burdwan, India. BSME 1967

Cleveland State University, Cleveland, Ohio. MS Engineering 1974

Experience

March 1980 - Present: Bechtel Power Corporation, San Francisco, CA. Piping Stress Analyst. Analysis of Class I and Class II piping for BWR plant, computer modeling, analysis and interface with other departments. Analysis includes static analysis for deadweight, thermal and anchor movements also enveloped response spectra analysis for seismic and hydrodynamic (SRV, CHUGGING, CONDENSATION-OSCILLATION etc.) loads. Evaluation of functional capability for critical piping, lug stress and field change notice for deviations. Complete responsibility for analysis as well as interface with field for the following systems inside containment: FEEDWATER, RECIRCULATION, MSRV and CHILLED WATER LINES.

April 1979 - February 1980: Sargent & Lundy Engineers, Chicago, IL, Piping Stress Analyst. Analysis of Class I and Class II piping per ASME Code Section III, computer modeling of piping systems, performing analysis for deadweight, thermal, seismic and hydrodynamic loads. Combined reactions, selection of support locations, lug stress and functional check. Annular Pressurization Analysis by Multiple Response Spectra method.

November 1977 - March 1979: EDS Nuclear Inc., Charlotte, N. C., Senior Engineer. Analysis of Class I and Class II piping by alternate criteria. Calculations of hanger and equipment reactions for Deadweight, Thermal and Seismic load. Stress analysis of complex structures for pipe supports. Review of piping systems with flow diagram, checking of stress reports and providing training and technical assistance to engineers.

March 1977 - October 1977: General Electric Company, San Jose, CA, Associate Engineer. Analysis of Class I piping per ASME Code Section III, Thermal transient analysis for OBE, SRV and anchor displacements, combined reactions, use of fatigue curve for usage factor calculation, preparing stress report. Vendor responsibility for core spray, feedwater lines and feedwater sparger.

June 1974 - March 1977: Babcock & Wilson Co., Lynchburg, VA, Associate Engineer. Finite element analysis of steam generator nozzles, calculations of thermal transient stress, discontinuity stress, reinforcement area calculations, stress analysis of primary piping, fatigue analysis.

Robert L. Cloud Associates, Inc.

GILBERT J. MADRID

CONSULTANT

Professional Resume

Education

California State University Northridge, BS in Civil/Structural Engineering, 1974

California State University Northridge, Graduate Studies

Experience

April 1980 - October 1981: General Electric Company, ARSD, Sunnyvale, CA; Piping Stress Analyst; Performed structural evaluation studies for the effects on piping due to sodium water reaction loading. Performed stress analysis of low and high temperature piping and piping components per ASME Section III, Class 1 and 3 using finite element computer codes. Considered static and seismic loading and loading due to sodium water reaction and pipe break. Performed optimization of pipe routing and location of supports for auxiliary piping, justified by analysis.

July 1978 - April 1980: Imodco International, Los Angeles, CA; Project Engineer; Performed structural design/analysis of pressure containing components (per ASME Section VIII), and various structures for marine application (per ABS and AISC).

February 1975 - July 1978: Atomics International, Canoga Park, CA; Engineer; Performed structural design and analysis of support systems for piping, pressure vessels, and process equipment for nuclear application. Performed design of supporting steel for standard and special piping restraints. After one year assigned to Piping and Structural Stress Analysis Unit, performing stress analyses of low and high temperature piping systems per ASME Section III, Class 1, 2 and 3, and ANSI B31.1. Evaluated static and dynamic load cases.

May 1973 - December 1974: Continental Development Corporation, El Segundo, CA; Architectural Design Draftsman; Prepared design layouts for space and office planning, and new construction. Prepared architectural working drawings for new construction and building modifications.

July 1969 - February 1973: Price Pfister Brass Manufacturing Company, Pacoima, CA; Draftsman; Draftsman in Plant Engineering. Prepared plant layouts and detailed working drawings for facility planning.

Robert L. Cloud Associates, Inc.

KENT K. LEUNG

CONSULTANT

Professional Resume

Education

University of California, Berkeley	MSME	1963
National Taiwan University, Taiwan	BSME	1958

Experience

1976 to Present: GTE Sylvania Inc., Mountain View, CA. Engineering Specialist. Responsibilities include:

- As an in-house consultant on structural dynamics and heat transfer design analysis for mechanical department. Conduct finite element analysis; shock, vibration, and thermal analysis as well as ASME Code vessel design.
- Perform seismic dynamics, wind load, and nuclear blast analysis and design for antenna, mast, and M548 vehicle modification design analysis.

1972-1976: Bechtel Power Corporation. Senior Structural Engineer.

- Check structural calculations for structural engineers to insure method of analysis following Bechtel design criteria and Nuclear Regulatory Guidelines.
- Perform finite element seismic dynamic analysis for reactor support, reactor service building, dump heat exchanger buildings and containment building structures and polar crane support.
- Generate response spectra for various locations and floor for FFTF nuclear power plant using acceleration time history analysis of ANSYS CODE to provide mechanical equipment support, piping support and building structures seismics loading input.
- In charge of seismic modification of Humboldt Bay unit 2 to update structures to NRC requirement.
- Perform seismic analysis of nuclear piping system with floor differential movement for piping analysis.

1968-1972: University of California, Berkeley. Development Engineer.

- Design and perform thermal/structural analysis for balloon-borne superconducting magnet vessels.
- Development and supervising design, tests, and fabrication of thin shells of minimum weight for high altitude particle physics research experiment.
- Perform finite element stress analysis (SAP) of optical mechanical equipment used in particle trajectory record.

1965-1968: Bechtel Corporation. Mechanical Engineer. Perform stress analysis and structural design of the following:

- Check structural calculations of offshore platforms, marine terminals, submitted by subcontractors.
- Perform finite element stress analysis (STRESS) of the following: docking fender system, crane girders, 11 ft. dia. bottle leg cassons.
- Stress analysis for submarine pipeline.

1963-1965: Agricultural Aviation Engineering Co. Stress Engineer. Responsible for stress analysis and design of supporting structures for chemical spray system installed in helicopter and airplane. Design ram air turbine and centrifugal pump for airborne spray system.

Publications

Seismic stress analysis of piping and equipment on heat exchanger supporting structures. Third International Conference on SMiRT. London, 1975.

Robert L. Cloud Associates, Inc.

BRIAN D. SHELDON
Consultant
Consultant

Professional Resume

Education

Northeastern University, Boston, Massachusetts, M.S., Mechanical Engineering, 1974

Northeastern University, Boston, Massachusetts, B.S. Mechanical Engineering, 1972

Experience

11/80 to 1/82: Quadrex Corporation, Campbell, California, Senior Engineer. Performed stress analyses of piping systems for the LaSalle County Station Unit 2. Work included ASME Class 1, 2, and 3 and ANSI B31.1 piping subsystems. All analyses performed using the PIPSYS computer program. Developed and verified a computer program for enveloping multiple dynamic header displacements per project criteria.

8/78 to 11/80: Control Data Corporation, Waltham, Massachusetts, Principal Structural Analyst. Responsibilities included pre- and post-sales support for CDC's structural engineering computer codes. Provided training and technical support for interactive graphics finite element modeling program UNISTRUC and the automatic drafting program AD-2000. Also provided structural consulting services for CDC customers.

Developed a combination pre- and post-processor to STARDYNE/ANSYS to automate the analysis of flexible baseplates. This program is currently available on CDC's Cybernet computer network.

Performed various nuclear and non-nuclear analyses, including: an ASME Class 3 pump analysis, piping analyses per ANSI B31.1, non-linear analysis of a stereo speaker driver, and deflection analysis for a floating drydock.

9/74 to 8/78: NUS Corporation, Rockville, Maryland, Project Engineer. Responsible for the design and analysis of various nuclear-related components and piping systems. Major tasks included the analysis of an ASME Class 1 primary coolant pump for weight, thermal, and seismic loadings utilizing two- and three-dimensional modeling techniques and the design and analysis of the piping and supports for a primary coolant pump testing facility.

Additional analyses included spent fuel racks, ASME Class 1, 2, and 3 and ANSI B31.1 piping systems, safety injection storage tanks, heat exchangers, etc.

Responsible for the development and maintenance of various in-house computer programs.

2/74 to 9/74 Stone and Webster Corporation, Boston, Massachusetts, Task Engineer. Performed thermal and complete stress analyses of ASME Class 1 piping penetrations using finite element and finite difference computer codes. Developed a geometry plotting program for the thermal analysis code TAC-2D.

6/72 to 2/74 McPherson Associates, Inc., Waltham, Massachusetts, Engineer. Performed stress analysis of the reactor core for the Loss of Fluid Test (LOFT) Reactor and classified work for the NAVY S7G Project.

Responsible for the development and maintenance of various in-house computer codes.

Robert L. Cloud Associates, Inc.

KEVIN LYNCH

Consultant

Professional Resume

Education

Seattle University, Seattle, Washington, Thirty six units for M.S. in Mechanical Engineering.

National University of Ireland, Dublin, B.S., Mechanical Engineering

Professional Registration

Registered Mechanical Engineer, State of California

Experience

7/79 to 1/82: Nuclear Services Corporation, Campbell, CA. Piping Stress Analysis - as group leader, was responsible for the "as-built" stress analysis of ASME Section III and ANSI B31.1 piping systems in a BWR nuclear power plant (La Salle 1 & 2). This included performing thermal expansion, weight, seismic and hydro-dynamic load analysis using NUPIPE and PIPSYS computer programs, and preparing stress reports. Performed stress analysis and re-design (when necessary) of nuclear power plant (Surry 1) seismic piping supports. This involved the use of computer modeling techniques in addition to hand claculations.

9/71 to 6/79: Bechtel Power Corporation, San Francisco, CA. Piping Stress Analyst - responsible for the stress analysis of ASME Section III, ANSI B31.7 and ANSI B31.1 piping systems in both PWR and BWR nuclear power plants (Duane Arnold, Arkansas 1 & 2, Susquehanna). This included performing thermal expansion, weight, seismic and thermal transient analysis, and preparing Stress Reports for Class I piping. Reviewed and approved vendor hanger and restraint drawing. Made trips to job sites to verify that the "as-built" piping systems complied with design requirements, and to provide technical support to Field Engineering in resolving construction problems. Reviewed and approved valve stress and seismic reports from valve vendors. Prepared design and analysis guides for use within the Piping Stress Analysis Group.

6/67 to 12/69: Boeing Company, Seattle, Washington, Stress Analyst and Structural Designer. Worked on the SST Program. Responsible for preparing preliminary layouts and stress analysis of several AFT body structural concepts and

performing a comparative evaluation of these concepts. Also, performed stress analysis of landing gear components and conducted trade studies of various landing gear structural configurations

ROGER F. REEDY, P.E.

Mr. Reedy has worked in the pressure vessel and nuclear power industries since 1956. His experience includes quality assurance, design, analysis, fabrication, and erection of nuclear power plant components. His background encompasses boiling water, pressurized water, and HTGR nuclear power plants, as well as pressure vessels for the petroleum, chemical, and other energy industries. Mr. Reedy is an acknowledged expert in the design and construction of nuclear components meeting the requirements of the ASME Boiler and Pressure Vessel Code, which includes detailed quality assurance requirements for all components.

He has been involved in quality assurance programs and audits, licensing, engineering review, project coordination and training of personnel. He has testified as an expert witness before regulatory groups, including USNRC and ACRS on topics such as design criteria, analysis, fabrication, quality assurance and fracture toughness.

Mr. Reedy has been an active participant for the past 15 years as a member and as chairman of major nuclear Codes and Standards Committees in the development of criteria for nuclear power plant components. In this activity he was a member of the first Task Group on Quality Assurance for Material Manufacturers and Suppliers (NCA-3800) and under his Chairmanship, instigated the incorporation of NQA-1, "Quality Assurance Program Requirements for Nuclear Power Plants," into the ASME Nuclear Code. He has served utilities, architect/engineers, and manufacturers, as a consultant on all aspects of nuclear power plant construction.

As an original member of the N626.3 Commitee, Mr. Reedy insisted that registered professional engineers understand the requirements for quality assurance, materials selection welding parameters, and selection of non-destructive examinations for all structures they design. The N626.3 document was recently incorporated into the ASME Nuclear Code (Section III) and engineers designing nuclear components must now comply with its provisions. These requirements are unique to the nuclear power industry.

During the past ten years, Mr. Reedy has conducted training courses for engineers in Quality Assurance and ASME Nuclear Code requirements. He has also conducted many seminars for NRC regional inspectors.

Professional Background

American Society of Mechanical Engineers

- Boiler and Pressure Vessel Committee
  - Chairman, Subcommittee on Nuclear Power (Section III)
  - Executive Committee, member
  - Main Committee, member

    In 1980, he was awarded the 1980 ASME Centennial Medal by the Policy Board for Codes and Standards in recognition of his long contribution to the development of the Boiler and Pressure Vessel Code.
  - Subgroup on Containment, past chairman
  - Subgroup on Fabrication and Examination, former member
- ASME Pressure Vessel and Piping Division
  - Past Chairman
- Board on Nuclear Codes and Standards, member
- ANSI/ASME N626.3 Ad Hoc Task Group for Qualifications and Duties of Personnel Engaged in ASME Boiler and Pressure Vessel Code, Section III, Division 1 and 2, Certifying Activities, member

Registration

Professional Structural Engineer -- Illinois

Professional Civil Engineer -- California, Illinois, Indiana, Michigan, Wisconsin

Professional Experience

1956 to 1976 Chicago Bridge and Iron Company
Oak Brook, IL

Mr. Reedy was successively a designer, staff engineer, project engineer, design manager, and senior engineer reporting to the Vice President of Engineering. His duties

included design of pressure vessels, service as a staff engineer concerned with unique design and analysis problems, as well as consulting on quality assurance and related questions.

He helped to develop and implement the company's Quality Assurance Program for design and fabrication of pressure vessels for a NASA project in 1962. This program was the first formalized quality assurance program in the company, and provided the basis for future nuclear quality assurance programs.

As Manager of Special Structures Design, he was responsible for design and analysis of all nuclear components. In this position he was instrumental in the development of the company's nuclear quality assurance program for the design and construction of nuclear reactors and containment vessels, and helped to select the company's first quality assurance manager. As Design Manager, he initiated the concept of independent design verification by an independent engineering group within the company.

As Senior Engineer reporting to the Vice President of Engineering he was responsible for consulting on all company activities concerning ASME Code design, construction, and quality assurance.

1976 to 1981 Nutech
San Jose, CA

Managed Special Projects Group, including Quality Assurance, Training, and Program Management. Served as Code Consultant to other engineers and clients of Nutech. During this time Mr. Reedy was Director of the Quality Assurance Group and consulted with clients in developing QA Programs to meet the requirements of 10CFR50, Appendix B, ANSI N-45.2 and the ASME Section III Code.

As Chief Consultant, he served as ex-officio advisor to all in-house projects and all clients on quality assurance, design, and fabrication questions, as well as consulting

Code problems.

He worked with the Republic of China Atomic Energy Council to set up an independent Inspection and Quality Verification Program in Taiwan and has given a number of lectures on Quality Assurance in both Korea and Taiwan.

1981 to Present	R. F. Reedy, Inc. Los Gatos, CA

Founder and President of an engineering consulting company which advises client company's management on Quality Assurance, design, fabrication,, construction and licensing.

Education

B. S. in Civil Engineering
Illinois Institute of Technology

WILLIAM S. GIBBONS, P.E.

Mr. Gibbons has worked in manufacturing and the power industry since 1951. His domestic and overseas experience includes foundry engineering, materials engineering of power plant components and fuel, process development, supplier and contractor evaluation and development, quality systems, quality assurance, inspection, and site erection and construction. Mr. Gibbons is a recognized expert in quality for Regulatory and ASME Boiler and Pressure Vessel Code applications.

He has been involved in engineering review, licensing programs, and training. For the past 12 years Mr. Gibbons has been an active participant as a member and chairman of Codes and Standards Committees in the development of requirements for power plant components. He has served utilities, architect-engineers, and manufacturers as a consultant on design, construction, and quality systems.

Professional Background

American Society of Mechanical Engineers

- Boiler and Pressure Vessel Committee
  - Member, Subgroup on General Requirements (SCIII)
  - Co-Chairman, Working Group on Quality Assurance and Stamping (SCIII)
  - Member, Subcommittee on Nuclear Accreditation
  - Chairman, Task Group on Material Manufacturers and Suppliers (SCIII)

American Society for Quality Control

ASME-Course Director, Quality Assurance

Technical Seminars, Inc.

- Lecturer, Quality Assurance and Auditing

Past Member

ANSI B31.1, Power Piping
ANSI B31.7, Nuclear Power Piping
ASME Subgroup on Materials (SCIII)
ASME Subgroup on Fabrication and Examination (SCIII)
ASTM Materials Committees

Professional Registration

Metallurgical Engineer - California

Quality Engineer - California

Professional Experience

1952 to 1954 Westinghouse Electric Corporation, Pittsburgh, PA

Manufacturing Engineer

1958 to 1959 Sylvania (GTE), Mountain View, CA

Contracts Administration Analyst

1959 to 1969 General Electric Company, San Jose, CA

Successively, Engineer to Manager, Quality Assurance, Europe.

Materials engineering for steam supply components, and associated processes; organized and administered the Japanese and European materials and quality programs for procurement and site construction, including supplier/contractor evaluation and selection.

1969 to 1980 Bechtel Power Corporation, San Francisco, CA

Successively, Supervising Metallurgical Engineer, Quality Assurance Manager, and Procurement Supplier Quality Deputy Manager.

Assisted in development of Bechtel's initial Quality Manual for ASME field fabrication and installation. As San Francisco Power Division Quality Assurance Manager, he was responsible for the overall quality program and assuring its implementation in engineering, construction, and procurement on the Division's power projects. In Procurement he was responsible for the technical direction of the worldwide Supplier Quality Department - including the quality program, quality planning, source evaluation and inspection, auditing, and personnel training.

1980 to 1981	Nuclear Technology Incorporated (NUTECH), San Jose, CA
	Chief Consultant, Quality Engineering
	Consulted internally and externally, principal achievement was successfully directing utility's efforts to obtain ASME Code N Certificate of Authorization.
1981 to present	W. S. Gibbons, Inc. Oakland, CA Currently consulting with utilities, manufacturers and architect-engineers.

<u>Education</u>

B. S.	Metallurgical Enginering, 1952, University of California, Berkeley
M.B.A.	Business Administration, 1958, University of California, Berkeley

PAUL J. HERBERT, P.E.

Mr. Herbert has worked in shop manufacturing and site construction for projects involving the power, refinery, chemical, and other industries since 1958. His domestic and overseas experience includes materials engineering, site erection and construction of power plant components, and failure analysis and maintenance repair of operating facilities.

Mr. Herbert is a recognized expert for the manufacture and construction of components for nuclear and fossil plant facilities. He has been involved in engineering review, licensing, project coordination and management, training of personnel, and development and implementation of various types of quality related programs. He has testified as an expert witness before various regulatory groups on topics such as failure analysis and evaluation, corrective action programs, fabrication and examination techniques. He has also served on review panels before the USNRC for review and evaluation of proposed maintenance repair programs of safety related equipment and systems, and has testified as an expert witness in damage litigations.

Mr. Herbert has been an active participant for the past 15 years as a member and chairman of Codes and Standards Committees in the development of requirements for power plant, refinery and chemical, pipeline and civil structure components. He has served utilities, architect/engineers, and manufacturers as a consultant on all aspects of plant equipment design, manufacture, installation,and repair/maintenance.

Professional Background

American Society of Mechanical Engineers

- Boiler and Pressure Vessel Committee
  - Member, Subcommittee on Nuclear Inservice Inspection (SC-XI)
  - Member Working Group on Non-destructive Examination (SC-XI)
  - Member Subcommittee on Non-destructive Examination (SC-II)
  - Chairman, Subgroup on Ultrasonic Examination (SC-V)
  - Chairman, Working Group on Acoustic Emission (SC-V)

- Member, Working Group on Duties and Responsibilities (SC-III)

- Lecturer for ASME Sponsored Training Courses

American Society for Nondestructive Testing

- Member

American Welding Society

- Member, Special Task Group for AWS D1.1 Ultrasonic Testing.

- Lecturer for AWS sponsored training courses.

Professional Registration

Metallurgical Engineer -- California

Quality Engineer -- California

Professional Experience

1959 to 1967 General Electric Company
San Jose, CA

Successively, Engineer to Lead Engineer in Materials on Manufacturing Engineering.

Materials and manufacturing engineering for power plant components, site construction and installation. Included supplier/contractor evaluation qualification and selection.

1967 to 1971 Rotterdam Dockyard Company,
Rotterdam, Holland.

Consultant to the Managing Director

Consulted with Rotterdam on the design construction and initiation of operation of a large pressure vessel manufacturing facility. Duties included establishment of training programs for personnel and development and implementation of QA programs for acceptance by NRC and ASME.

1971 to 1974 Southwest Research Institute,
San Antonio, Texas

Successively Staff Engineer, Senior Staff Engineer and Manager of Special Engineering Projects.

Assisted utilities in the development of maintenance repair programs for NSSS systems and components and managed several programs from initiations to completion. Provide American, European and Japanese firms with consulting services for the manufacture of ASME, Section III Code components. Performed extensive analysis and evaluation services related to failures and or difficulties in manufacturing or construction.

1974 to 1981 Bechtel,
San Francisco, CA

Successively Supervising Engineer, Department Manager (Alaska Pipeline Project) and Group Manager in Materials and Quality Services Department.

Assisted Bechtel in development of a Corporate NDE program and controlled the training program for approximately 450 Field NDE personnel. Managed six spreads of QC on the Alaskan Pipeline project with approximately 650 total QC staff. For two years I managed the Bechtel Field and Corporate QA Manual program and provided coordination services between Bechtel and clients and ASME.

1981-present P. J. Herbert, Inc.
Moraga, CA

Currently consulting with utilities manufacturers and architect/engineers.

Education

B. S. Metallurgical Engineering, 1959
Colorado School of Mines,
Golden, Colorado.

QUALIFICATION DATA

for

Edward E. Varnum

EMPLOYMENT:	EDWARD E. VARNUM COMPANY, INC.
PREVIOUS EMPLOYMENT:	Chicago Bridge and Iron Co. (Retired)
EDUCATION:	University of Illinois Civil Engineering BS Degree 1935 (Structural)
	University of Illinois Civil Engineering. MS Degree 1936 (Structural)
	University of Illinois - Engr. Graduate School Courses in structures, foundations, and fatigue-credit received (1937-1939)
REGISTRATIONS:	Registered Professional Engineer - State of Illinois Registered Quality Engineer - State of California
SHORT COURSES:	Salesmanship - 1957
	Technical Writing - 1958
	Nondestructive Examinations - 1967 and 1968
	Quality Assurance Management - 1966 and 1967
	Nuclear Code Requirements - 1968 and 1980
ENGINEERING SOCIETIES:	American Society of Mechanical Engineers
	American Society for Quality Control
	Western Society of Engineers
	Society of American Military Engineers

RELATED WORKING EXPERIENCE

1973 -To Date: President of Edward E. Varnum Co., Inc. Mr. Varnum manages consulting organization and personally furnishes consulting services in the areas of QA, inspection, testing, calibration, auditing, specifications for material, forming, heat treating, welding and vendor qualification, and internal audits.

During period performed over 100 formal surveys and audits including 15 for ASME/National Board as auditor on Nuclear Survey Team, balance as Lead Auditor. Design control function included. Divided between pressure vessels, piping, valves, controls, etc., and manufacturing of plates, forgings, castings and welding materials. Included Utilities, component manufacturers, material manufactuers - small, and some of the world's largest. Training and Sales Promotion included.

1968 - 1972 CBI-Director Corporate Nuclear Quality Assurance, Responsible for developing and directing nuclear quality assurance program (multi-shop, multi-construction sites, world-wide basis), including responsibility for adequacy of all QA aspects (including QA on drawings, specifications and procedures). During period performed surveys and audits as Lead Auditor, including subcontractors and suppliers of materials and parts.

1966 - 1968 CBI-Manager of Quality Assurance. Responsible for all quality aspects for the world's first site assembled nuclear reactor pressure vessel.

1960 - 1965 CBI-Senior Product Manager. Responsible for sales-design, promotion and contracting of hydro-electric and special metal products.

1957 - 1959 CBI-Product Manager - Standard Products. Responsible for sales-designs, promotion and contracting of liquid storage tanks, pressure vessels, tower-tanks and for training of contracting Engineers.

1954 - 1956 CBI-Assistant Manager of General Sales and Contracting. Responsible for general standard contracting. Assisted in the sales

	and promotional efforts on special products.
1948 - 1953	CBI-Contracting and Chief Estimating Engineer.
1945 - 1947	CBI-Field Construction Engineer.
1941 - 1945	US Army Engineer.
1937 - 1940	CBI-Design Engineer. Responsible for tower-tank, foundations and pressure vessel designs.
1936 - 1939	CBI-Shop Engineer. Shop fabrication of plate and structural steel products.

ROBERT F. PETROKAS

Mr. Petrokas has extensive experience in the design and analysis of ASME and ANSI Code piping and components. His experience encompasses both project and technical management. His nuclear experience includes BWR, PWR and naval reactor systems. He has operated in positions ranging from engineer to manager of several large projects as well as a technical manager and chief technical consultant.

While with a nuclear consulting firm, he was the lead engineer in developing a major piping analysis program, established the organization's mechanical engineering department to perform piping system design and analysis, scale testing of hydrodynamic phenomena, pressure vessel design, and seismic analysis. In addition, he has been responsible for the planning and execution of power plant start up testing procedures as well as the development and planning of a test program to monitor piping and equipment vibrations.

Mr. Petrokas has participated in many quality assurance audits, especially with regard to management reviews, design verification and design control. He has also been involved in ASME training and lectures on the ASME Nuclear Code, Section III.

In addition to his extensive experience in the power industry, Mr. Petrokas has experience in the aerospace industry including dynamic analysis of payloads, shock and impact testing, the design and analysis of ground support structures, and the analysis and reduction of flight data.

EDUCATION

B.S. in Mechanical Engineering, University of California

M.S. in Engineering Mechanics, University of Santa Clara

PROFESSIONAL BACKGROUND

American Society of Mechanical Engineers, Boiler and Pressure Vessel Committee

- Member, Working Group on Piping Design (SC III)
- Member, Working Group on Component Supports (SC III)

American Society of Mechanical Engineers, Editor of Chapter 6, "Piping Design" of the ASME Publication, A Decade of Progress (Published 1981, by ASME)

PROFESSIONAL REGISTRATION

Mechanical Engineer, California Certificate Number 14852

SUMMARY OF EXPERIENCE AND CAPABILITIES

Project and Technical Management
- Estimating, Scheduling, Planning
- Technical Management
- Design Review and Design Verification
- Development and Control of Technical Methods
- Technical Training

Piping and Component Design and Analysis
- Nuclear and Fossil Power Plant Piping Design and Analysis (ASME and ANSI)
- Design of Piping and Equipment Supports
- Piping Vibration Monitoring and Testing
- Pipe Rupture Design and Analysis

Specification Preparation and Review
- Design Specifications
- Test Specifications
- Purchase Specifications

Dynamic Analysis
- Seismic Analysis
- Vibration Analysis
- Time History Analysis of Piping
- Field Testing of Equipment Shock and Vibration

Management Services
- Consultation on Application of ASME and ANSI Codes
- Technical Representation Before Regulatory Agencies
- Contract Management
- Management Audits

RICHARD W. (RICK) SWAYNE

Mr. Swayne has worked in the nuclear power industry since 1975. He has experience in the design and fabrication of various nuclear power plant components. His background includes valve design and application, welding and materials engineering, and quality assurance program management. He has been involved in engineering reviews, material selection and application, quality assurance auditing and system development, and personnel training.

Mr. Swayne has been an active participant since 1977 as a member of nuclear Codes and Standards Committees. He has served as a consultant to utilities, architect/engineers, manufacturers, and material suppliers.

Professional Background

- ASME Boiler and Pressure Vessel Committee
  - Subcommittee on Material Specifications
  - Subgroup on Materials
  - Joint Task Group on Toughness for Nuclear Applications
- American Society for Testing and Materials
  - Main Committee on Steel, Stainless Steel and Related Alloys
    - Subcommittee on Castings
    - Subcommittee on Valves and Fittings

Professional Experience

1970 to 1974 Structure Probe, Inc.
West Chester, PA, and Metuchen, NJ

Mr. Swayne was a laboratory director and principle metallurgist reporting to the President. His duties included technical supervision of operations, materials research and development, material applications, and failure analysis.

1975 to 1980 Anchor/Darling Valve Company
Williamsport, PA, and Hayward, CA

Mr. Swayne's experience included metallurgical and welding engineering and quality

assurance management. He was involved in project quality surveillance, nondestructive examination, and vendor auditing, both domestically and overseas.

- He was responsible for overseeing corporate welding programs, material selection activities, and training, to ensure compliance with applicable Codes and Standards. As Quality Assurance Manager, he guided the organization through a successful ASME Survey.

1980 to 1981 Nuclear Technology, Incorporated
San Jose, CA

Mr. Swayne was a Senior Consultant, serving as a Code consultant to design engineers and outside clients. His duties also included internal quality assurance and training programs. He also participated in the writing and editing of Code Capsule.

1981-present R. F. Reedy, Inc.
Los Gatos, CA

Mr. Swayne has provided consulting services to utilities in the areas of metallurgy, welding, fabrication, and quality assurance. He is continuing his involvement in the writing and editing of Code Capsule.

Education

B.S. in Mechanical Engineering, Materials Option
University of Delaware

Seismic Analysis 4A-26 Review Information
Table of Contents

ITEM A: Seismic Analysis 4A-26 Isometric Drawing
Design Review Isometric - PG&E Dwg. 446495 (CCW SUP To Reactor Coolant Pumps)

ITEM B: Hanger Details and Summary Sheet

ITEM C: Piping and Insulation Specifications

ITEM D: Valve Drawing

ITEM E: Horizontal and New Vertical Hosgri Response Spectra Seismic Analysis 4A-26

ITEM F: Seismic Anchor Movements (Blume Report)

ITEM G: Design Change Notices will be sent as they become available

ITEM H: File 33 Forms (Hanger Load Tabulation)

ITEM I: No Equipment Nozzles Involved in Analysis 4A-26

ITEM J: Schematic Diagrams and Piping and Instrumentation Diagrams (P&ID's)

ITEM K: Pressures and Thermal Modes

ITEM L: No Additional Dynamic Loading Conditions for Analysis 4A-26

8201260321

ITEM A

DESIGN REVIEW ISOMETRIC

SEISMIC ANALYSIS ISOMETRIC

ELEVATION G-G

ELEVATION A-A

ELEVATION F-F

ELEVATION B-B

ELEV. H-H

ELEVATION C-C

ELEV. K-K

ELEVATION H-H

ELEVATION E-E

ELEV. J-J

PLAN

ELEVATION D-D

HANGER NOTES:

- A UPPER CASE LETTER BY HANGER SYMBOL INDICATES AXIS IN WHICH PIPE IS RESTRAINED
- 2A "B" SUBSCRIPT INDICATES RESTRAINT APPEARS ON SEISMIC ANALYSIS ONLY
- 3A ALL DIMENSIONS ACCURATE TO NEAREST FOOT
- 4A [illegible]

(SCALE DIMENSIONS IN PARENTHESIS WHICH ARE FOR 79-14 WALKDOWN)

ISSUED TO Q.C. ON 1-10-81 FOR 79-14 CHECKING

NOTES:

1. FINAL DIMENSION BY FIELD MEASUREMENT.
2. THIS DRAWING NOT FOR CONSTRUCTION
3. [illegible]

(SCALE DIMENSIONS IN PARENTHESIS WHICH ARE FOR 79-14 WALKDOWN)

REF DWG'S:

[illegible]

FOR GENERAL NOTES & REF'S SEE DWG. [illegible]

PIPE SCHEMATIC: [illegible] SHT. 7

RM INDEXED REV. 01

446495

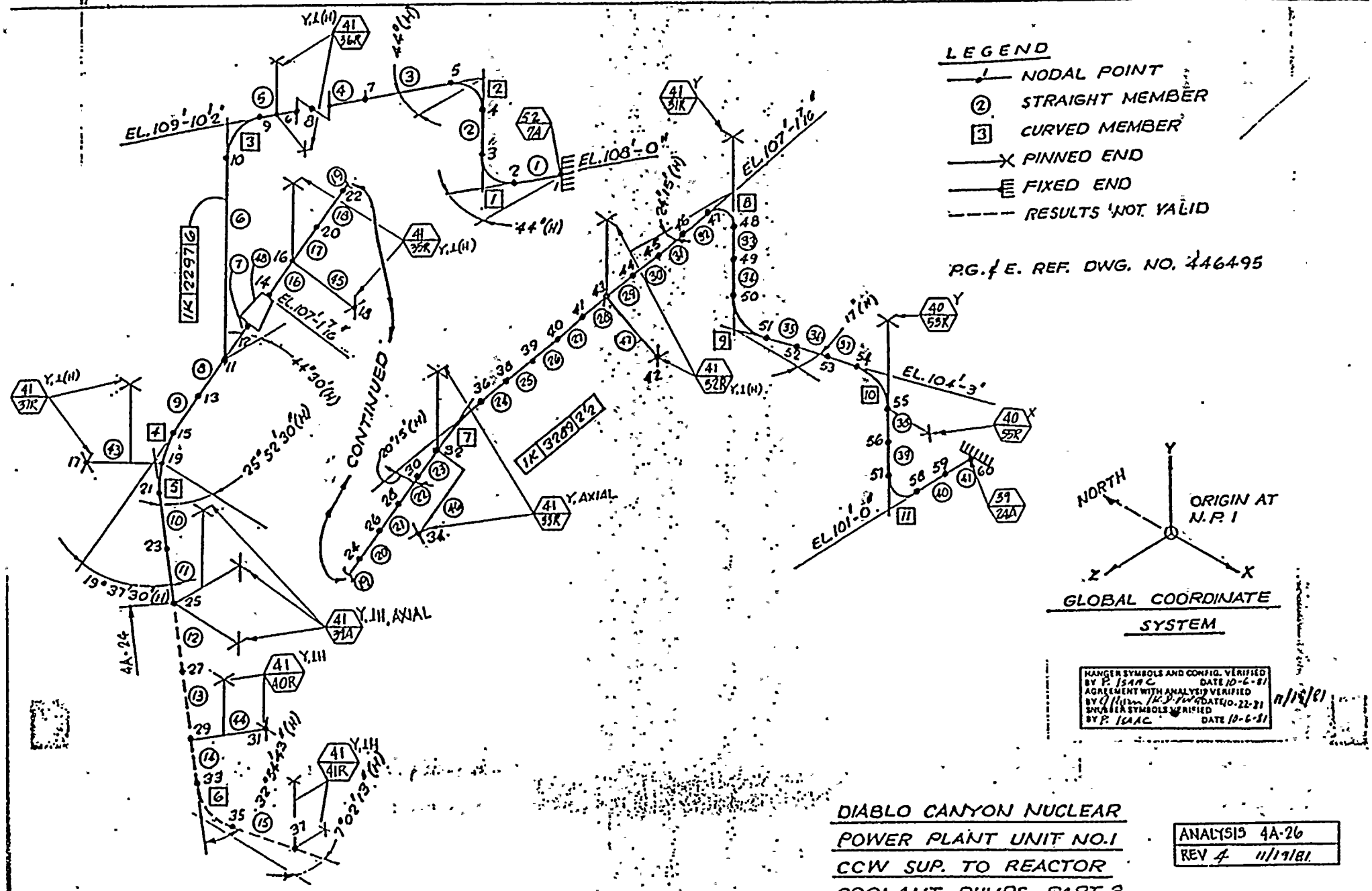
LEGEND
NODAL POINT
STRAIGHT MEMBER
CURVED MEMBER
PINNED END
FIXED END
RESULTS NOT VALID
P.G.&E. REF. DWG. NO. 446495
EL. 109'-10 1/2"
EL. 108'-0"
EL. 107'-7 7/16"
EL. 104'-3"
EL. 101'-0"
CONTINUED
Y.I(H)
Y.III, AXIAL
Y.III
Y.II
Y.AXIAL
NORTH
ORIGIN AT N.P. 1
GLOBAL COORDINATE SYSTEM
HANGER SYMBOLS AND CONFIG. VERIFIED BY P. ISAAC DATE 10-6-81
AGREEMENT WITH ANALYSIS VERIFIED BY DATE 10-22-81
SNUBBER SYMBOLS VERIFIED BY P. ISAAC DATE 10-6-81
DIABLO CANYON NUCLEAR POWER PLANT UNIT NO.1
CCW SUP. TO REACTOR COOLANT PUMPS PART 3
ANALYSIS 4A-26
REV 4 11/19/81
JOHN A. BLUME & ASSOCIATES, ENGINEERS

"FOR INFORMATION ONLY"

ANALYSIS	4A-24
REV. 4	2-26-80

DIABLO CANYON NUCLEAR POWER PLANT UNIT NO. 1 & 2
CCW SUPPLY TO R.C. COOLANT PUMPS PART 1

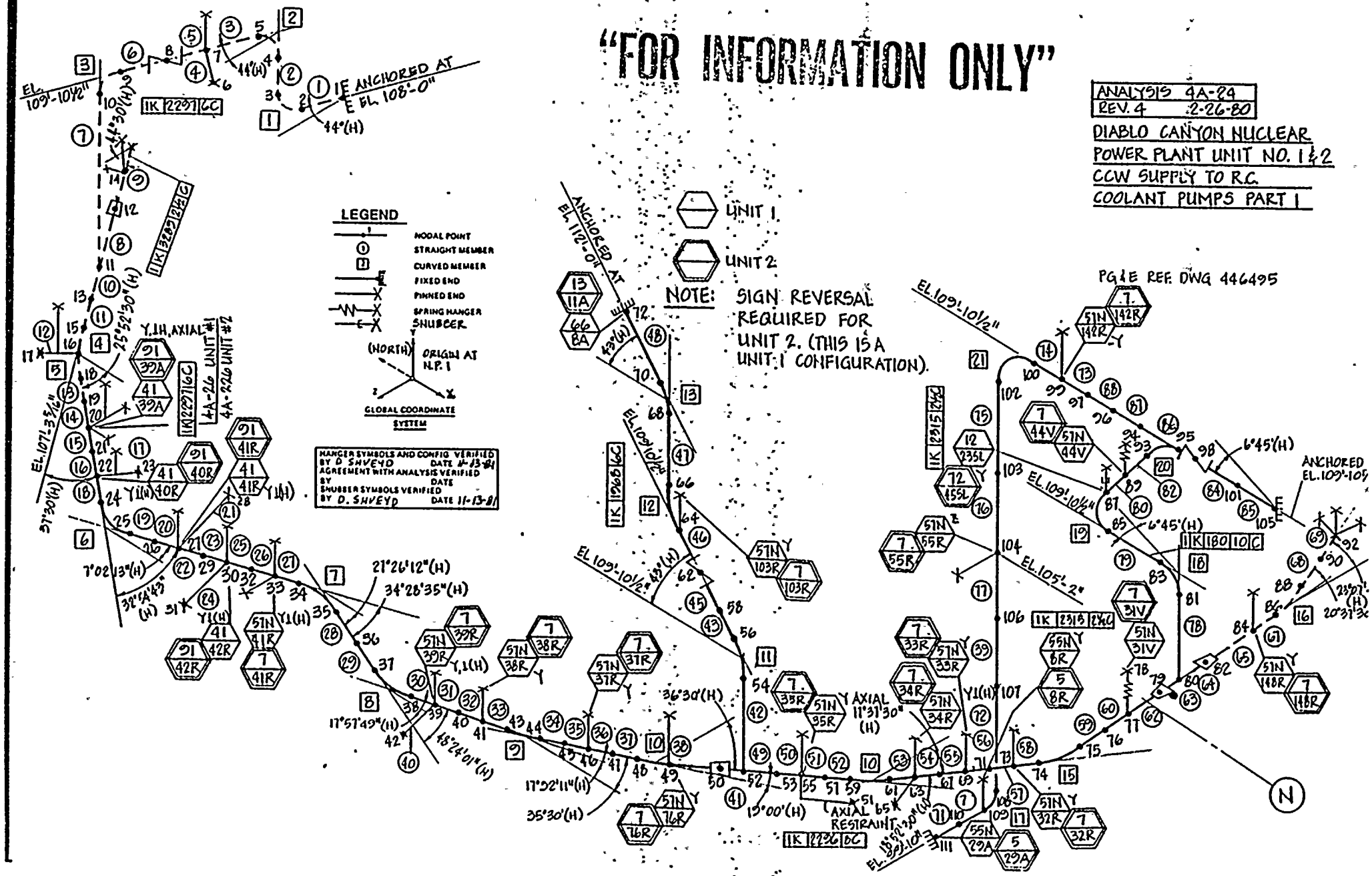

ITEM B

HANGER DETAILS WITH SUMMARY SHEET

ANALYSIS 4A-26

HANGER NO.	PGandE DRAWING NO.	SHEET NO.	REV.	FILE 33 REV.
39/24A	049251	26, 26A, 26B, 26C	3A	6
40/53R	049252	52, 52A, 52B	1A	3
40/55R	049252	54, 54A, 54B	1	3
41/31R	049253	23, 23A, 23B, 23C	2E (Pending)	4
41/32R	049253	24	2	4
41/33R	049253	25	2	3
41/35R	049253	27	2A	5
41/36R	049253	28, 28A	2	4
41/37R	049253	29, 29A	3	5
41/39A	049253	31, 31A	4B	7
52/7A	049298	41	1	3
41/40R	049253	32	3A	NOT INCLUDED
41/41R	049253	33, 33A	3A	NOT INCLUDED

AREA 1F	LINE 1-K-3289-2½ C	HANGER SYMBOL 39 / 24A
EL 91'-0"	1-K-2319-1½ C	LOC ON DWG 500039

76-1116-4

DESIGN CLASS I
CODE CLASS C

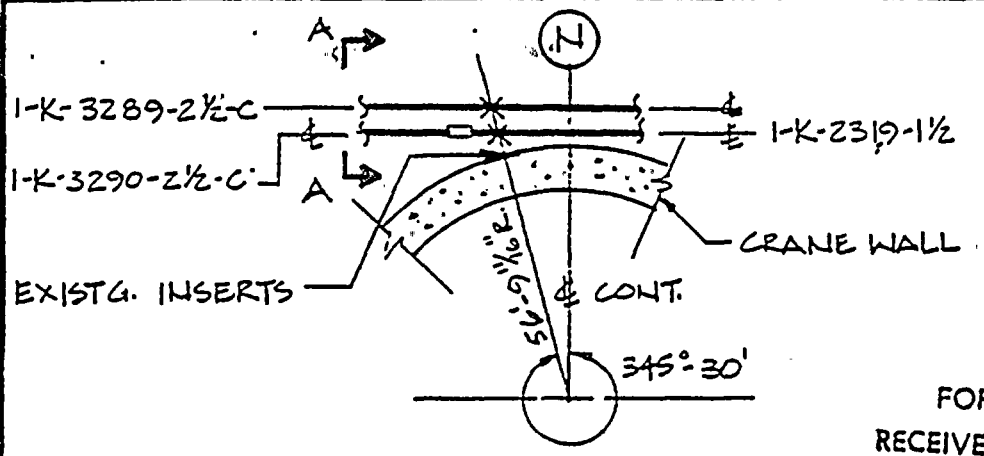

AS - BUILT
FOR DESIGN REVIEW
RECEIVED OCT 5 1981

LOCATION PLAN

NO OF ASSEMBLIES REQUIRED 1

NO	REQD	MATERIALS PER ASSEMBLY
1	1	W.4×13 — T.L. 15'-11½" (4 MEMBERS)
2	—	—
3	—	—
4	2	BAR 3¼"×½" — 0'-4" CUT AS SHOWN
5	2	BAR 3½"×½" — 0'-4" CUT AS SHOWN
6	1	W4×13 — 4'-4½" LG.
7	2	W4×13 — 5'-0" LG. CUT TO FIT
8	8	S 58 CONCRETE ANCHORS
9A	1	PL ½"×12½" — 1'-1½" LG.
9B	1	PL ½"×13¾" — 1'-2" LG.
10	2	BAR 3½"×¼" — 5'-0" LG.
11	2	BAR 3½"×¼" — 4'-4½" LG.
12	2	BAR 3½"×¼" — 2'-0½" LG.
13	1	BAR 4"×3/16" — 0'-4" LG.

	DSGN	DRAWING NO		
	DWN Mark 3-17-80	049251		
	CHKD AMJ 3-19-80			
PROJECT: DIABLO CANYON	UNIT: 1	SHT 26 OF SHTS	P G & E CO	ISSUE / REV 3A

MICROFILM

76-1117 Rev 3-76

AREA 1F	LINE 1-K-3289-2½ ⓒ	HANGER SYMBOL 39 / 24A
EL 91'-0"	1-K-2319-1½ ⓒ	LOC ON DWG 500039

NOTE(S):

1. EXISTG. INSERT @ 345° 31' FROM EL 92'-0" TO 104'-3" ⅛ FROM EL 105'-9" TO EL 113'-9"

2. 3289 FW# X679 ⅛ 680
   2319 FW# X1447 ⅛ X1448

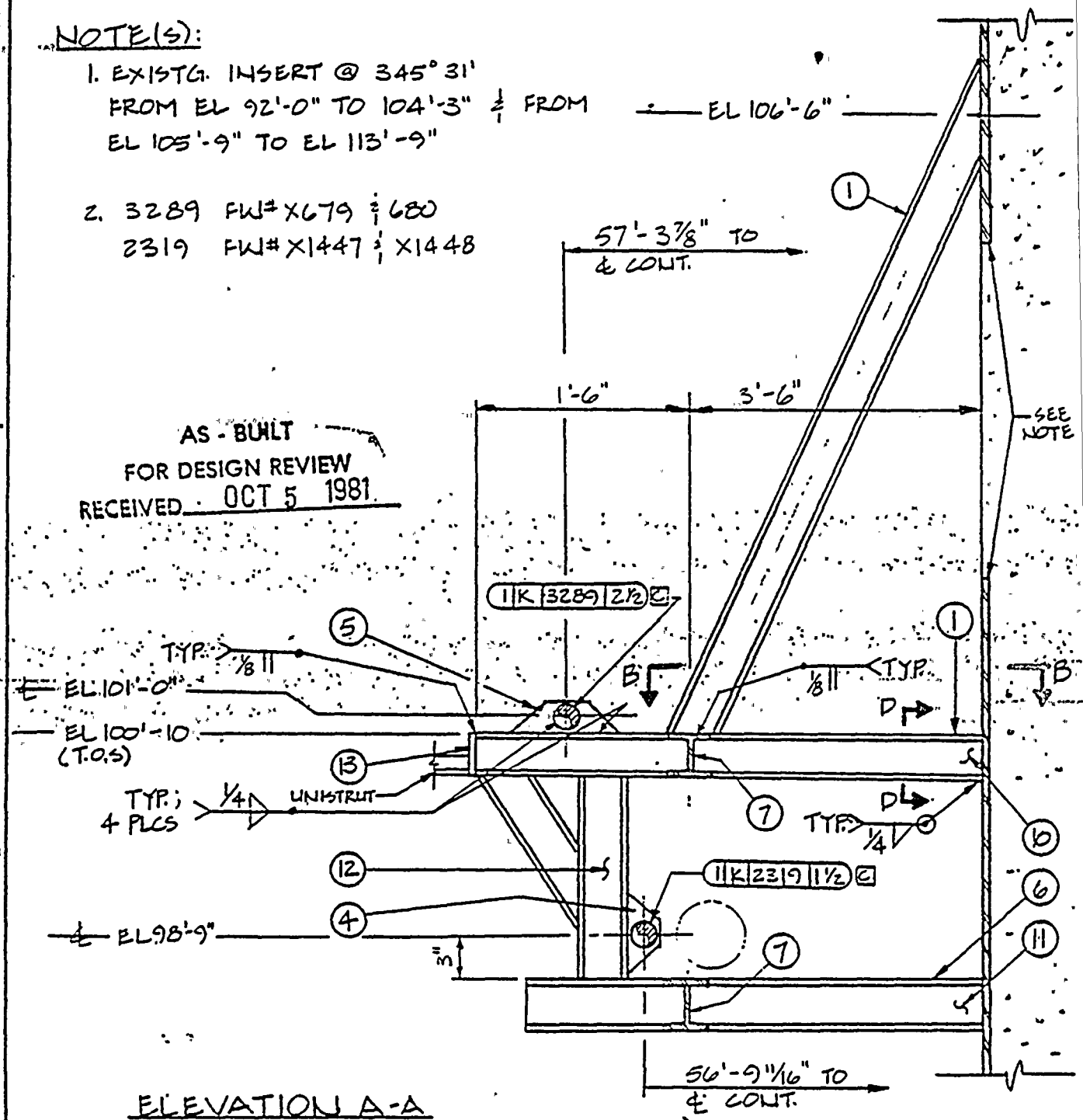

ELEVATION A-A
(FOR UNISTRUT AND TUBING DETAIL, SEE SHT 26C)

AS-BUILT
FOR DESIGN REVIEW
RECEIVED OCT 5 1981

		DSGN	DRAWING NO	
		DWN Van R 3-17-80	049251	
		CHKD AVH 3-19-80		
PROJECT:	UNIT: 1	SHT 26A OF SHTS	P G & E CO	ISSUE 3A REV

MICROFILM

76-1117 Rev 3-76

AREA 1F	LINE 1-K-3289-2½ [C]	HANGER SYMBOL 39 / 2AA
EL 91'-0"	1-K-2319.-1½ [C]	LOC ON DWG 500039

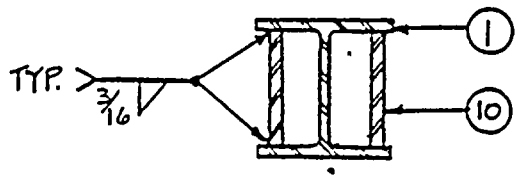

SECTION D-D (TYP.)

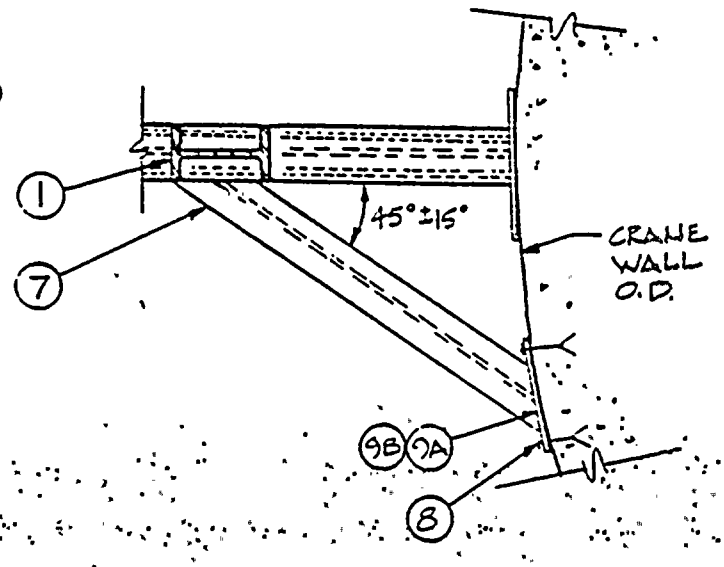

SECTION B-B

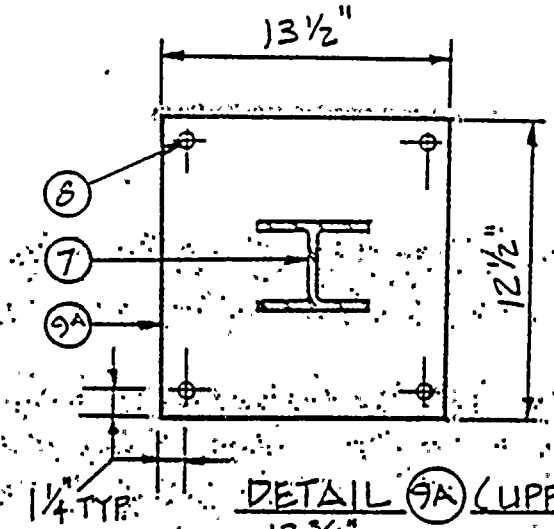

DETAIL 9A (UPPER PL)

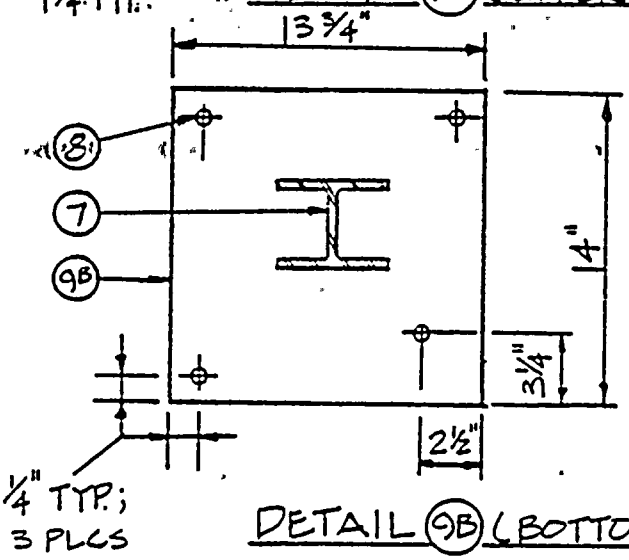

DETAIL 9B (BOTTOM PL)

AS - BUILT
FOR DESIGN REVIEW
RECEIVED OCT 5 1981

		DSGN	DRAWING NO	
		DWN JAN R 3-17-80	049251	
		CHKD AMH 3-19-80		
PROJECT:	UNIT: 1	SHT 26 B OF SHTS	P G & E CO	ISSUE ~~3A~~ REV
				MICROFILM

76-1117 Rev 3-76

AREA 1F	LINE 1-K-3289-2½ ⊡	HANGER SYMBOL 39 / 26A
EL 91'-0"	1-K-2319-1½ ⊡	LOC ON DWG 500209

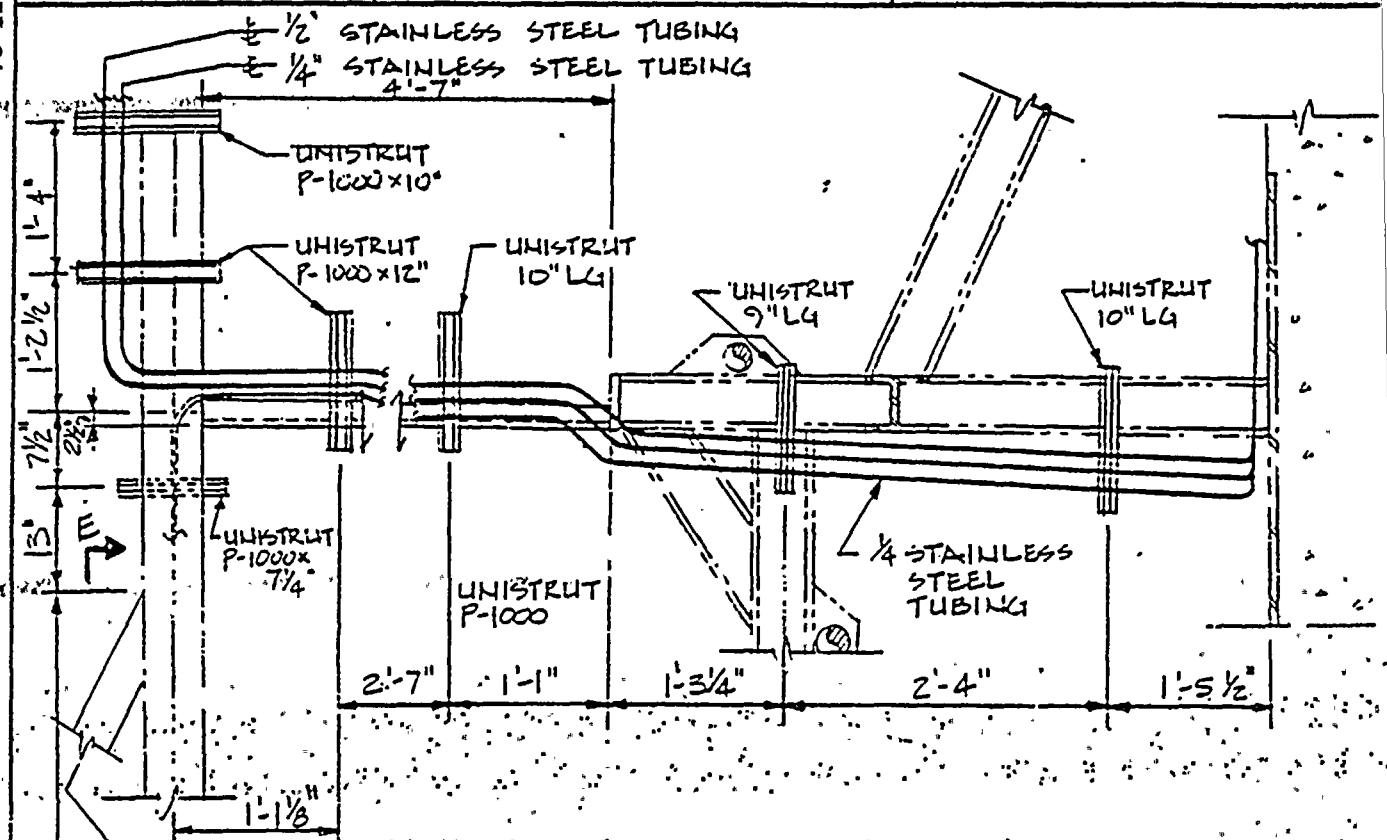

UNISTRUT AND TUBING DETAIL
(REFER TO SHT 26A FOR LOC.)

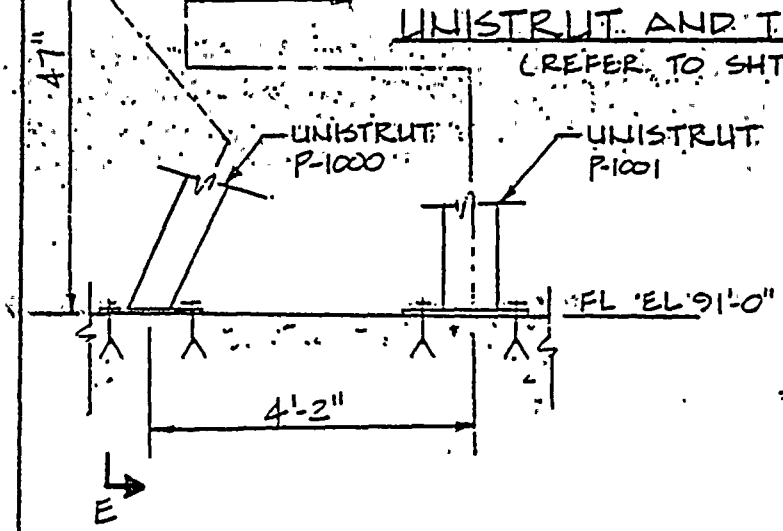

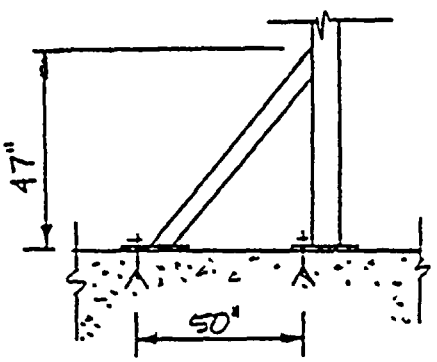

SECTION E-E

AS - BUILT
FOR DESIGN REVIEW
RECEIVED OCT 5 1981

		DSGN	DRAWING NO	
		DWN 3-24-80	049251	
		CHKD 3/24/80		
PROJECT:	UNIT: 1.	SHT 26 OF SHTS	P G & E CO	ISSUE / REV 3
				MICROFILM

76-813

AREA 1F	LINE 1-K-3289-2½ C	HANGER SYMBOL 40 / 53R
EL. 100'-0"	NOS. 1-K-3290-2½ C	LOC. ON DWG. 500040

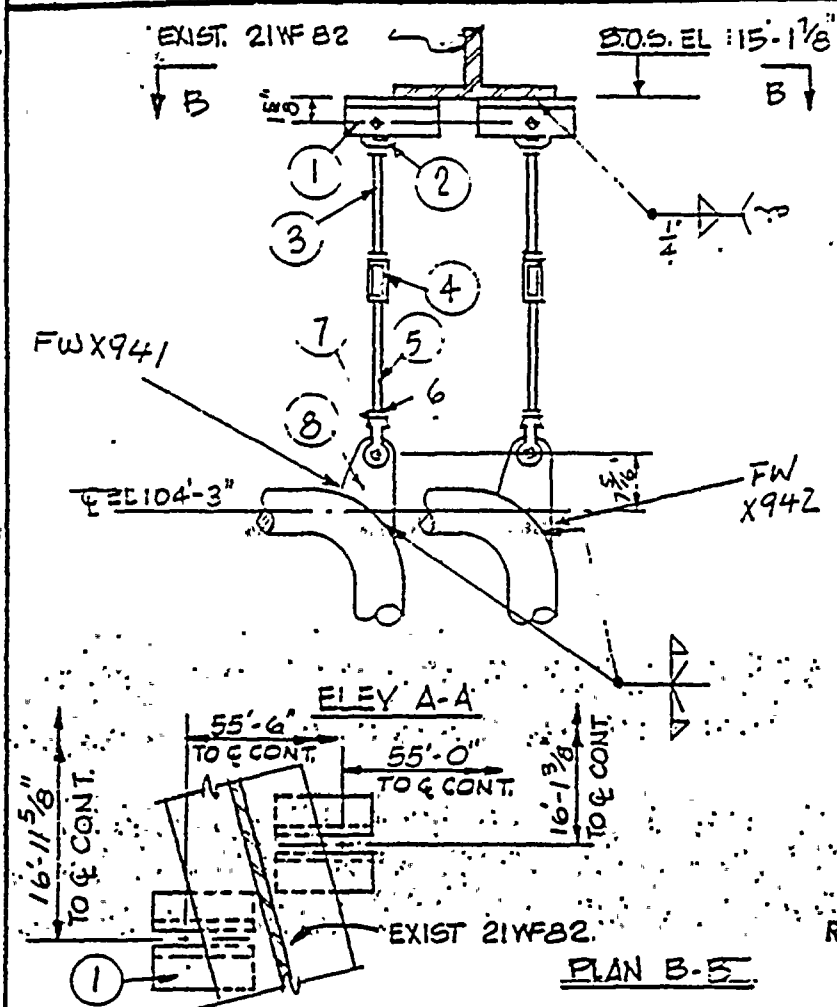

DESIGN CLASS I
CODE CLASS C

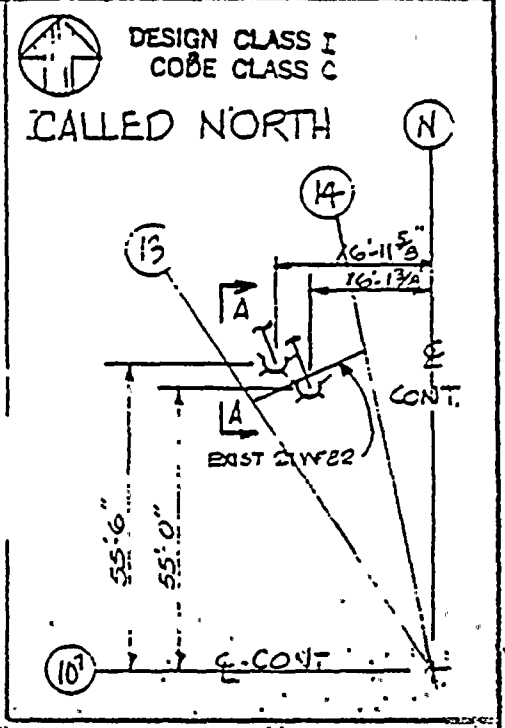

LOCATION PLAN

AS - BUILT
FOR DESIGN REVIEW
RECEIVED OCT 5 1981

NO. OF ASSEMBLIES REQUIRED 1

FOR DATA SEE FILE 33

NO.	REQD	MATERIALS
1	2	H.S. 65, ½"Φ, B=2", E=6"
2	2	½" Φ FIG 290
3	2	½ x 4'-10½ FIG 140 W/6" T.B.E.
4	2	½" FIG 230
5	2	½ x 4'-2¼" FIG 253 W/6" T.B.E.
6	8	½ HEX NUT
7	2	½" FIG 299 W/PIN
8	2	H.S. 55, J.E. ½"Φ ROD

CHG. 1: APPROVED FOR CONST.

PLANT INDEXED REV. 1

DIABLO CANYON UNIT 1

P G & E CO.
SHEET 52 OF SHEETS

DRAWING NO. 049252

DSGN D 11

R2-1

76-813 Rev 2-7

AREA IF	LINE 1-K-3289-2½-C	HANGER SYMBOL 40/53R
EL 100'-0"	1-K-3290-2½-C	LOC. ON DWG 500040

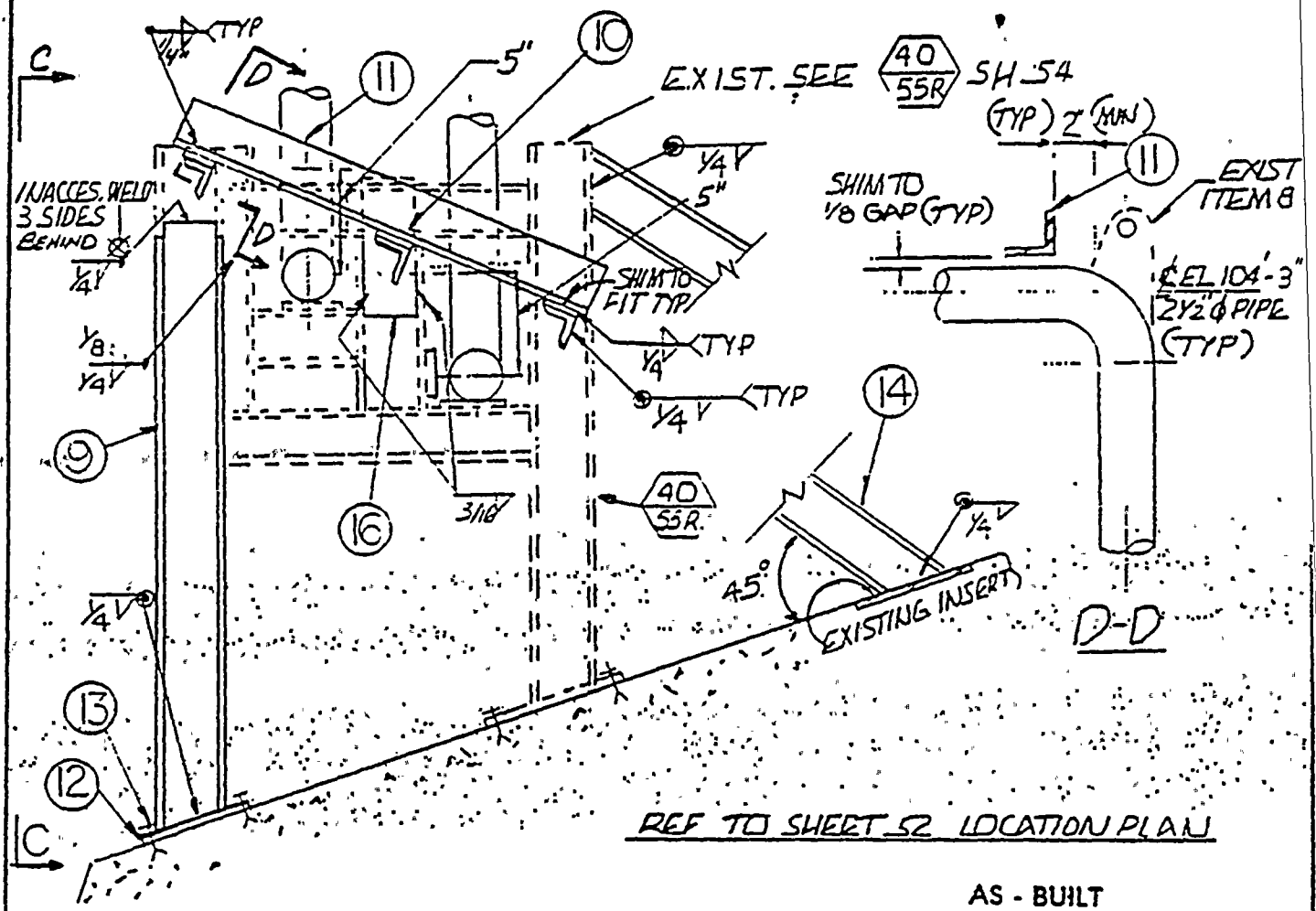

AS - BUILT
FOR DESIGN REVIEW
RECEIVED OCT 5 1981

NO OF ASSEMBLIES REQUIRED 1

NO	REQD	MATERIALS
9	1	4WF 13 7'-0" LONG
10	3	L 3"X3"X3/8" 2'-2" LG
11	1	L 3"X3"X3/8" 2'-0½" LONG
12	1	HS 48 9"x14½"x½" DRILL 4-3/4" HOLES AS SHOWN C-C
13	4	SS8 PHILIPS CONCRETE FASTNER W/BOLT
14	1	4WF 13 7'-9" LONG
16	1	PL 8 3/4 X 3 3/4 X 3/8

SHEET 52 OF ___ SHEETS	DRAWING NO	REV
PG&E CO.	049252	1
	MICROFILM	

DWN: VJL-2-5-80 DSGN: CHKD: PK 2-7-80

76-1145 Rev 3-7

AREA 1F	LINE 1-K-3289-2½ C	HANGER SYMBOL 40 / 53R
EL 100'-0"	1-K-3290-2½ C	LOC ON DWG 500040

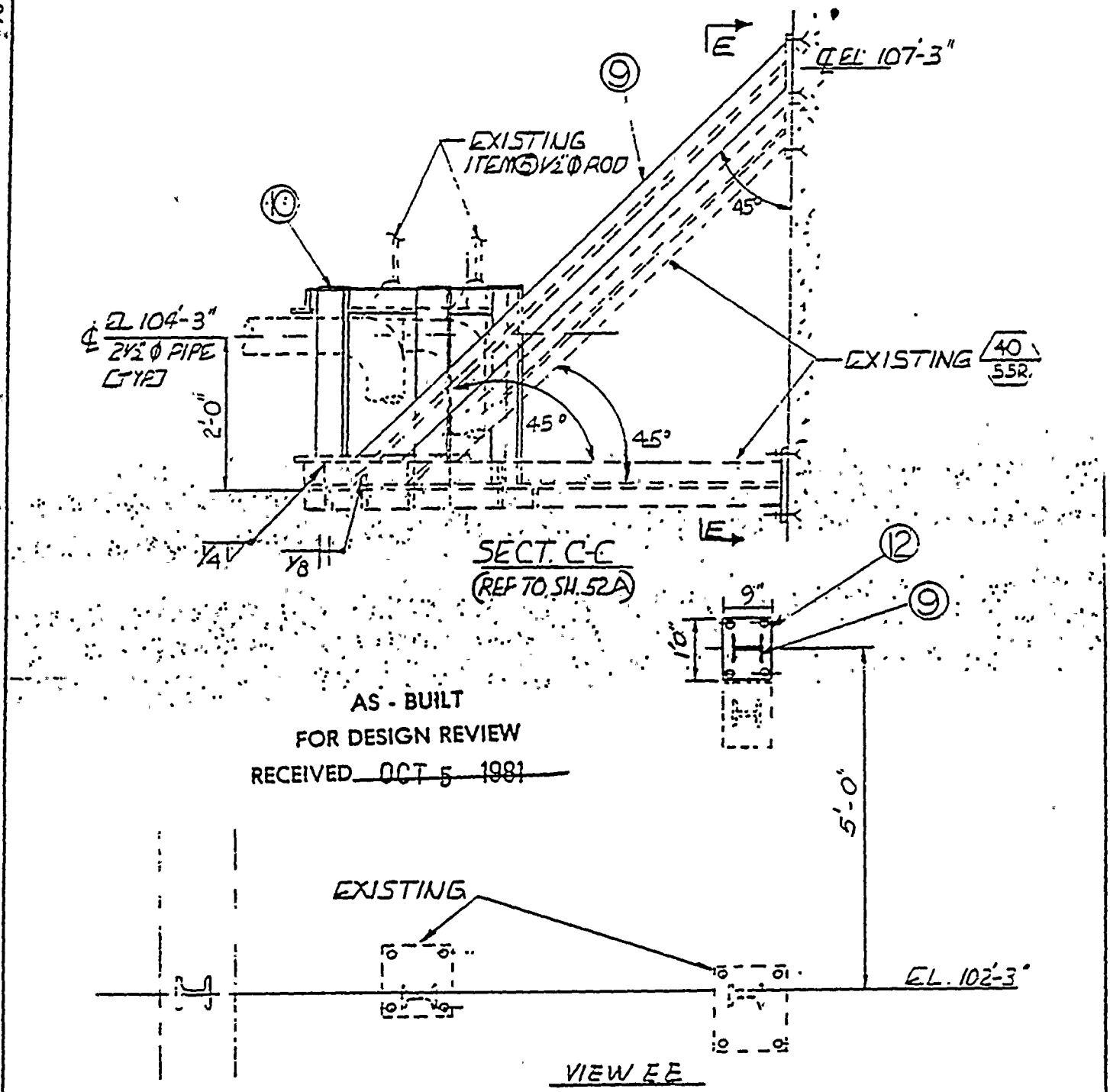

AS - BUILT
FOR DESIGN REVIEW
RECEIVED ~~OCT 5 1981~~

	SHEET 52B OF SHEETS	DRAWING NO	REV
	P G & E CO	049252	~~14~~

DWN: VJL-2-5-80 DSGN: CHKD: PSC 2-7-80 MICROFILM

76-1116 Rev 3

AREA 1F	LINE 1-K-3289-2½" C	HANGER SYMBOL 40/55R
EL 91'-0"	1-K-3290-2½' C	LOC ON DWG 500040

DESIGN CLASS I
CODE CLASS C

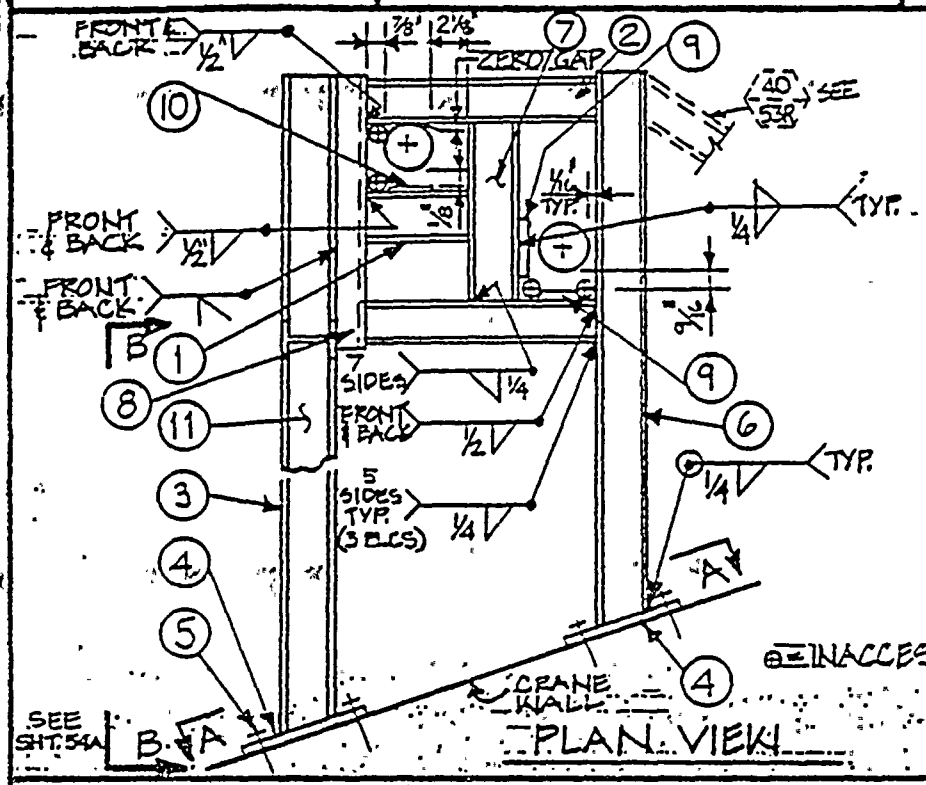

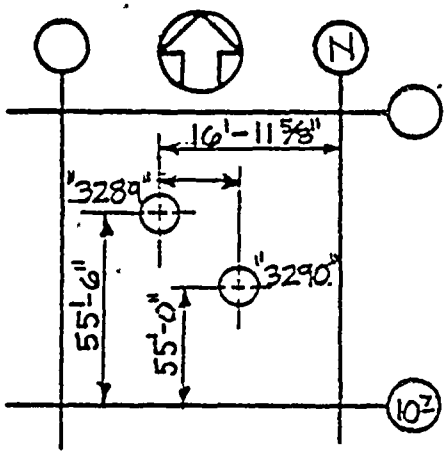

LOCATION PLAN

AS - BUILT
FOR DESIGN REVIEW
RECEIVED OCT 5 1981

NO OF ASSEMBLIES REQUIRED 1

NO	REQD	MATERIALS PER ASSEMBLY
1	1	4 WF 13, 5⅞" LG.
2	2	4 WF 13, 1'-1⅛" LG. EA.
3	2	4 WF 13, 15'-7⅛" LG. (1) 5'-7" LG
4	2	(1) C.S. PL 10"×15"×½" (1) C.S. PL 12⅝"×10"×½" W/4 · 1/16" φ HOLES TYP.
5	12	S-58 PHILLIPPS CONCRETE FASTENERS W/BOLTS
6	1	4 WF 13, 5'-5 13/16" LG.
7	1	4 WF 13, 0'-11" LG.
8	1	4 L 7.25, 1'-10⅜" LG.
9	2	(1) C.S. PL 3"×3"×¼" (1) C.S. PL 3"×3"×⅛" SHIMS
10	1	S.S. PL 3"×3"×1/16" SHIM
11	1	4 WF 13, 7'-0" LG. CUT TO FIT
12	2	(1) H.S. 48 C.S. PL 9"×12"×½" (1) H.S. 48 C.S. PL 9"×14¼"×½" W/4 · 1/16" φ HOLES
13	1	PL 3"×3"×½"

		DSGN	DRAWING NO 049252	
		DWN S.J. 2-6-80		
		CHKD MT		
PROJECT: DIABLO CANYON	UNIT: 1	SHT 54 OF SHTS	P G & E CO	ISSUE / REV 1
				MICROFILM

76-1145 Rev 3-

AREA 1F	LINE 1-K-3289-2½" C	HANGER SYMBOL 40/55R
EL 91'-0"	1-K-3290-2½" C	LOC ON DWG 500040

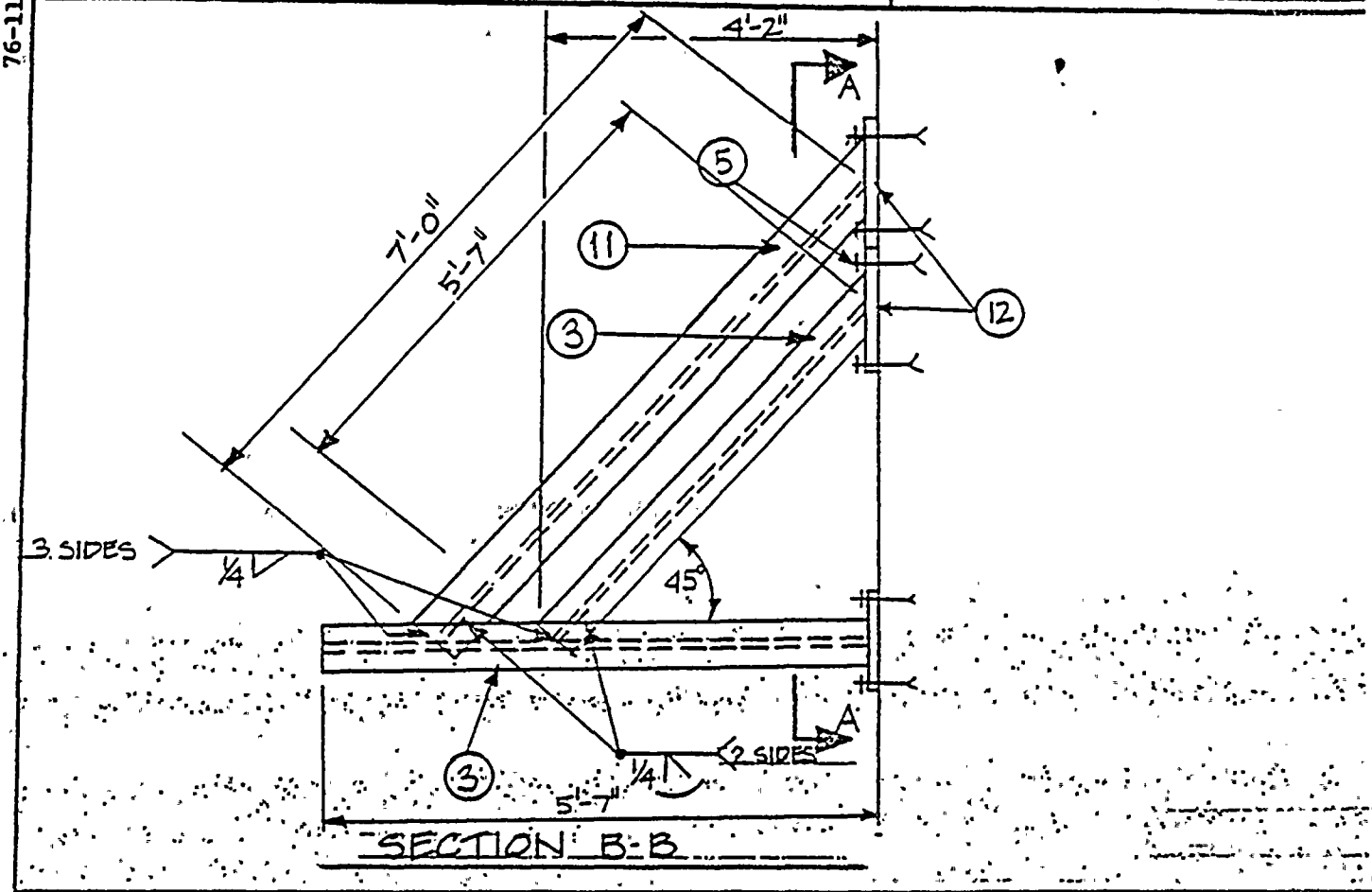

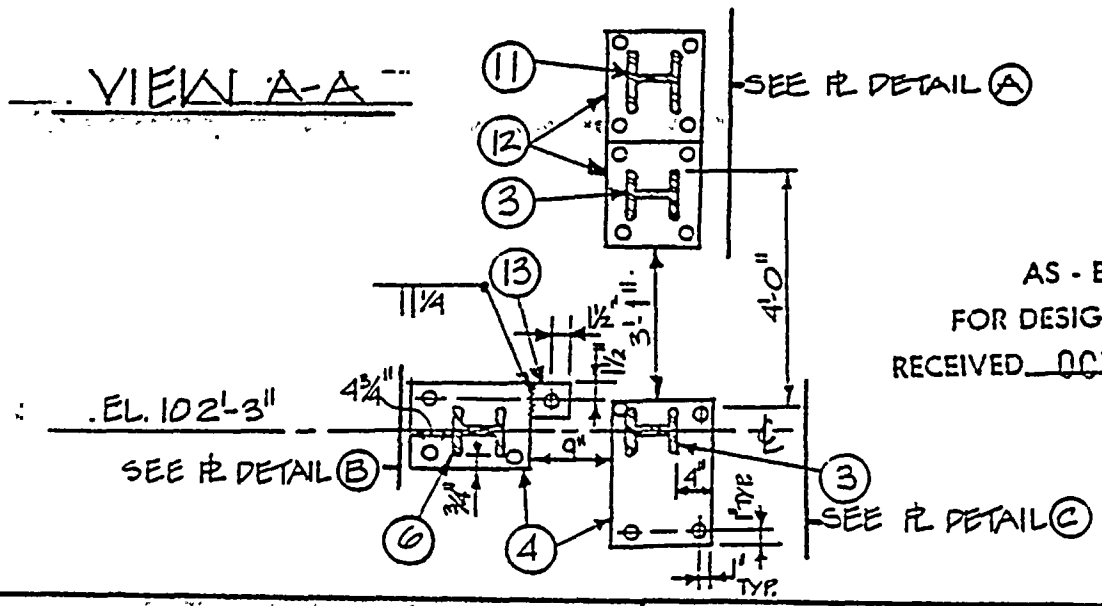

AS - BUILT
FOR DESIGN REVIEW
RECEIVED OCT 5 1981

DIABLO CANYON UNIT 1	SHEET 54A OF SHEETS	DRAWING NO	REV
	P G & E CO	049252	1
		MICROFILM	

DWN: S.J. 2-8-80 DSGN: CHKD: M.T.

76-1145 Rev 3-

AREA 1F	LINE 1-K-3289-2½" C	HANGER SYMBOL 40 / 55P
EL 91'-0"	1-K-3290-2½" C	LOC ON DWG 500040

PL DETAIL A

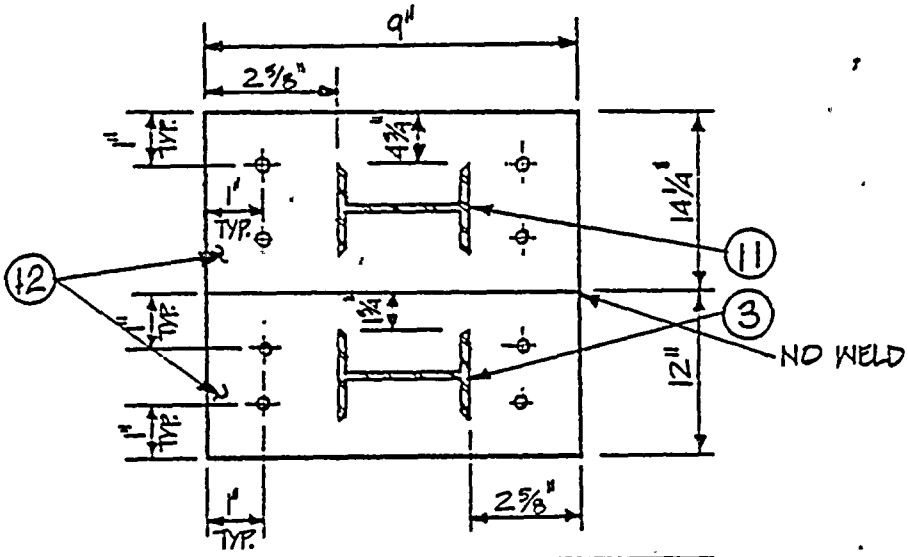

PLATE DETAILS

PL DETAIL B

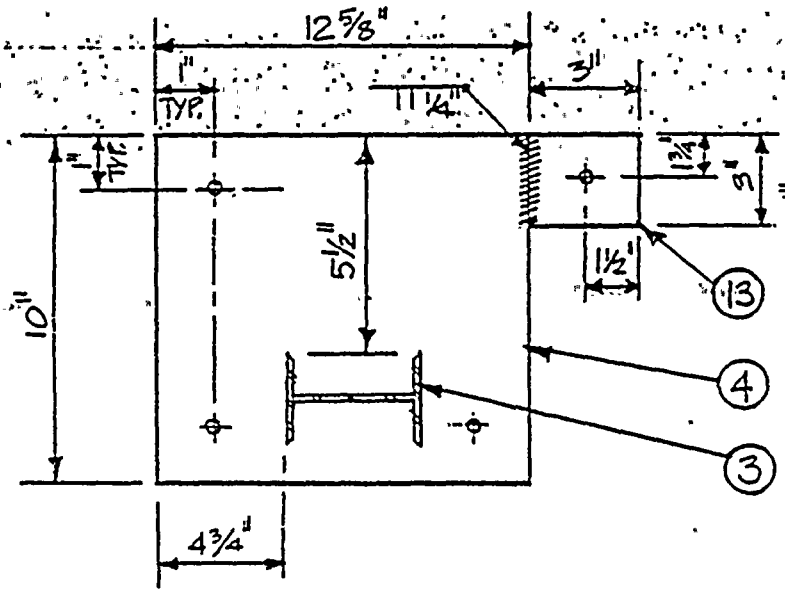

PL DETAIL C

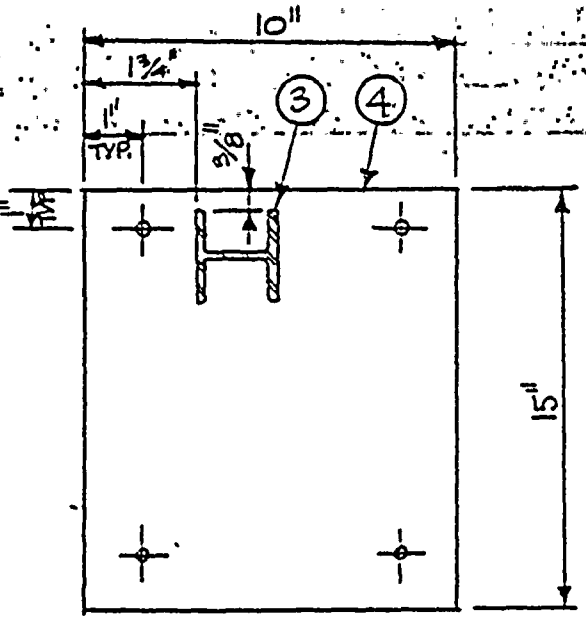

AS - BUILT
FOR DESIGN REVIEW
RECEIVED OCT 5 1981

DIABLO CANYON UNIT 1	SHEET 54B OF SHEETS	DRAWING NO	REV
	P G & E CO	049252	1
DWN: S. J. 2-8-80 DSGN:	CHKD: MT	MICROFILM	

AREA F	LINE 1-K-3289-2½-[illegible]	S-804 SYMBOL 41/31R
EL. 107'-6"	1-K-3290-2½ [C]	LOC ON DWG. 500041

DESIGN CLASS I
CODE CLASS C

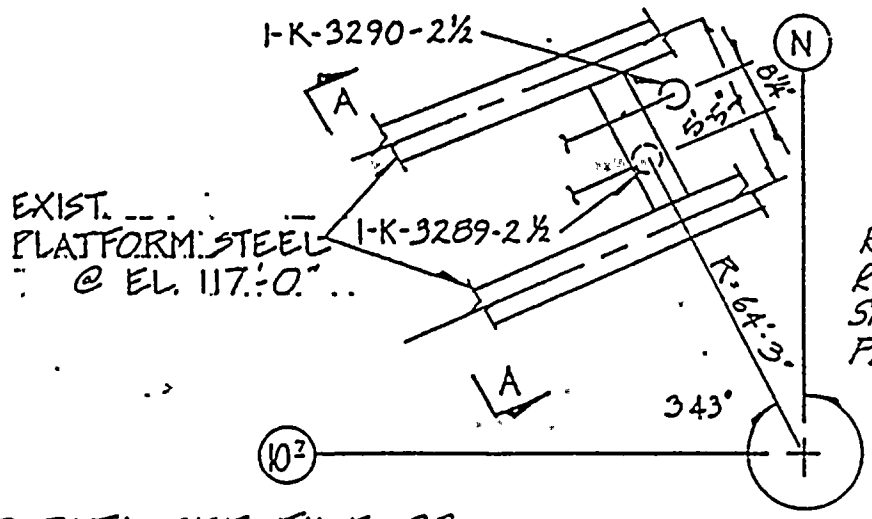

CALLED NORTH

41/31R

REV. 2E RESULTED FROM REVIEW FOR PROPERLY ORIENTED SPECTRA. NOW ON HOLD PENDING REANALYSIS FOR NEW SPECTRA.
TPC 12-2-81

LOCATION PLAN

FOR DATA SEE FILE 33

NO OF ASSEMBLIES REQUIRED 1

NO	REQD	MATERIALS PER ASSEMBLY	NO	REQD	MATR'L
1	1	W 4×13, 5'-3½" LONG			
2	1	W 4×13, 8'-4¾" LONG	21	2	∡ 3×3×½ × 0'-6½" LG.
3	1	½"ϕ FIG 290	22	1	∡ 3×3×½ × 1'-0" LG.
4	1	½"ϕ FIG. 66 W/B&N	23	2	PL ¼ × 4 × 0'-5½" LG.
~~5~~	~~2~~	~~L 3×3×½ 0'-6½" LONG~~			
~~6~~	~~1~~	~~L 3×3×½ 7'-1" LONG~~			
7	2	BAR ¼"×2", 0'-2½" LONG			
8	1	½"ϕ ROD FIG. 140 W/6" TEE, 7'-5½" LONG			
9	1	½"ϕ FIG. 299			
10	1	HS 53 C.S. PL W/HOLE FOR ½"ϕ ROD			
11	2	½" HEX NUT			
12	1	L 4"×4"×½", 1'-1" LONG			
13	2	BAR 5"×⅜", 5'-4½"			
14	1	L 3×3×⅜", 4'-2½" LONG (CUT TO FIT)			
15	1	W 4×13, 1'-8" LONG			
16	1	C 4×5.4, 0'-7" LONG			
17	1	W 4×13, 7'-11" LONG			
18	1	PL ⅜"×6"×0'-7" LONG			
19	4	PL STIFFENER PLATES ½" THK, 1¾"×0'-3⅜"			
20	1	L 3×3×⅜", 1'-7½" CUT TO FIT			

DES. BY	CHECKED BY	SUP'V'D BY	APP'V'D BY PIPING ENGR.	APP'V'D FOR SUPV. ENGR / GROUP LEADER	DATE
10-27-81	10-27-81				GM 167027

PIPE SUPPORT DRAWING CHANGE REQUEST	NO.	DIABLO CANYON UNIT #1	PG&E CO.	DRAWING NUMBER	REV.
			SHEET 23 OF SHEETS	049253	2E
				MICROFILM	

REV 2E: DELETED - ITEMS 5 & 6, ADDED - ITEMS 21 & 22 & 23, SHT. 23C, REVISED-SECTS A-A, L-L
REPLACE NEW X'S W/ REQD CLEARANCE & TRIM ITEM 13

76-1117 Rev 3

AREA F	LINE 1-K-3289-2½"-C	HANGER SYMBOL S-804	41 / 31R
EL 107'-6"	1-K-3290-2½"-C	LOC ON DWG 500041	

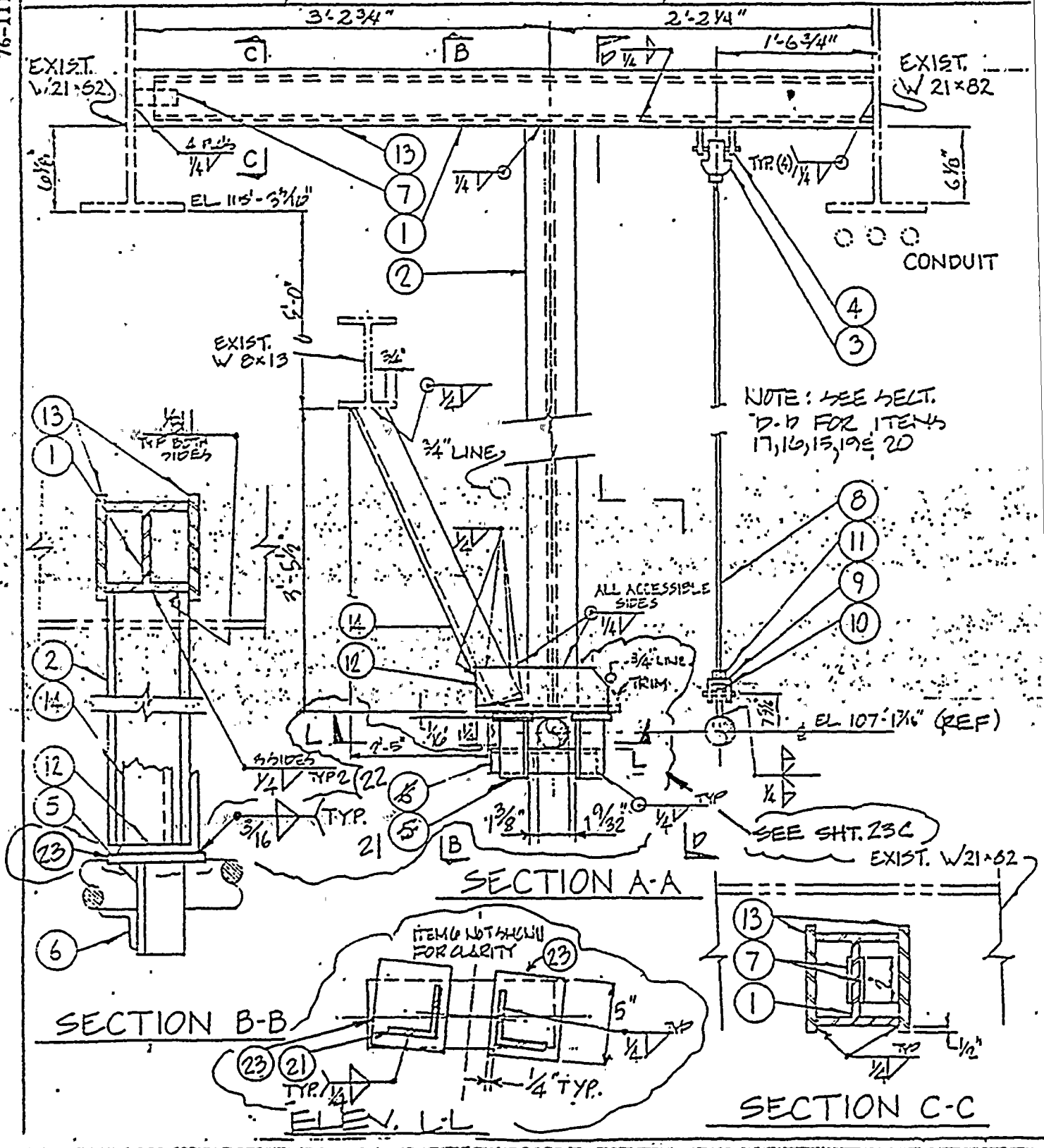

DR. BY	CHECKED BY	SUP'V'D BY	APP'V'D BY PIPING ENGR.	APP'V'D BY SUPV. ENGR.	DATE
10-27-81	SWIDYKA 10-27-81				Q1 167027

PIPE SUPPORT DRAWING CHANGE REQUEST	NO. D.C. #1	PG&E CO. SHEET 23A OF SHEETS	DRAWING NUMBER 049253	REV. 2E

70-1117 Rev 3-76

AREA 1F	LINE 1-K-3289-2½ C	HANGER SYMBOL 41 / 31R
EL 107'-6"	1-K-3290-2½ D	LOC ON DWG 500041

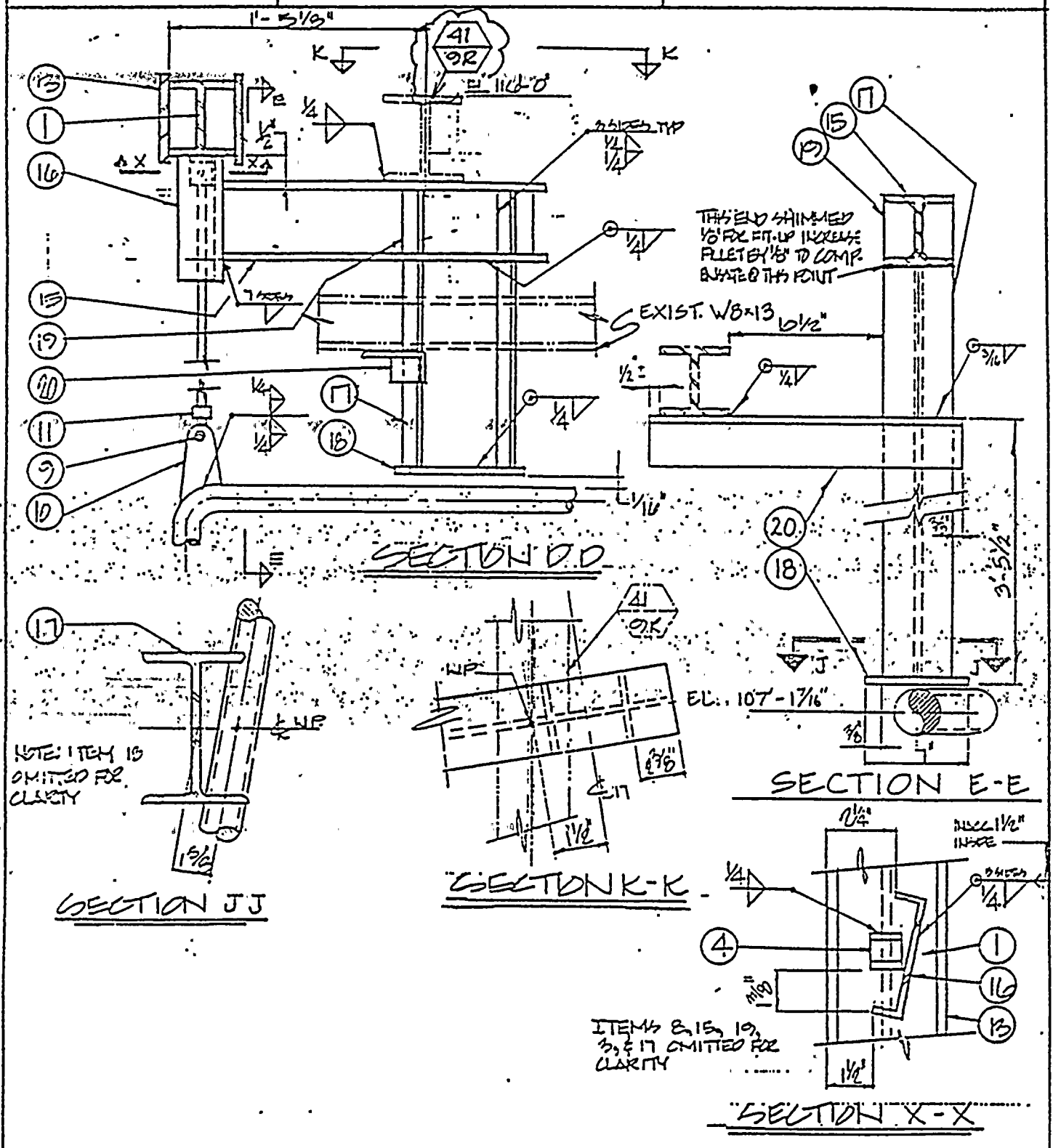

BY	CHECKED BY	SUP'V'D BY	APP'V'D BY PIPING ENGR.	APP'V'D BY SUPV. ENGR.	DATE
10-27-81	10-27-81				QM 167027

PIPE SUPPORT DRAWING CHANGE REQUEST	NO.	D.C. #1	PG&E CO. SHEET 23B OF SHEETS	DRAWING NUMBER 049253	REV. 2E

AREA F	LINE 1-K-3289-2½"-C	HANGER SYMBOL S-804 (41/31R)
EL 107'-6"	1-K-3290-2½"-C	LOC ON DWG 500041

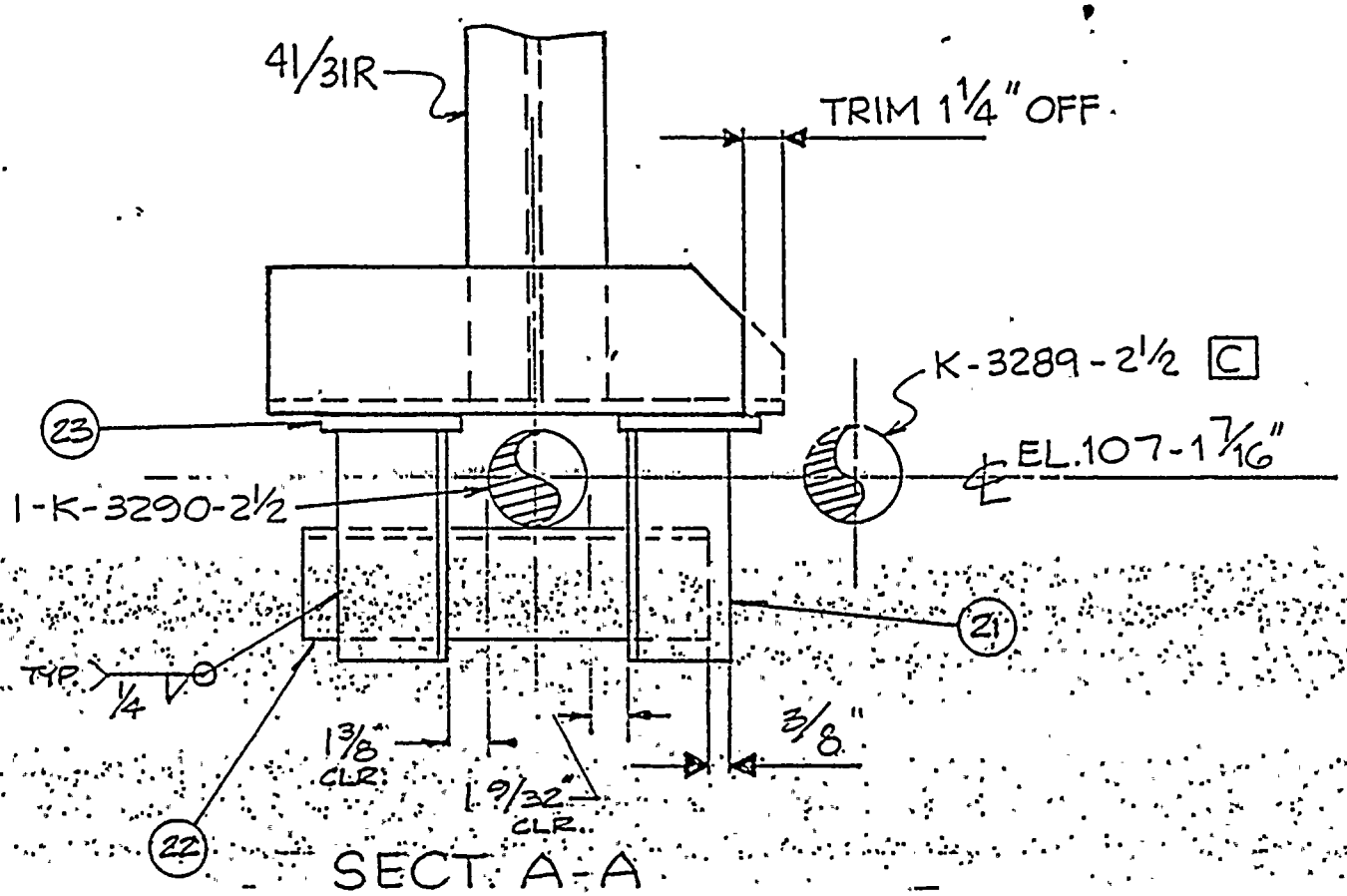

SECT. A-A

(SKEW NOT SHOWN)

DES. BY	CHECKED BY	SUP'V'D BY	APP'V'D BY PIPING ENGR.	APP'V'D BY SUPV. ENGR.	DATE
10-27-81	10-27-81				QM 167027

PIPE SUPPORT DRAWING CHANGE REQUEST	NO. 6-5	D.C. #1	P G & E CO. SHEET 23C OF SHEETS	DRAWING NUMBER 049253	REV. 2E

MICROFILM

76-813

AREA 1F	LINE 1-K-3290-2½-C 1-K-3289-2½-C	HANGER SYMBOL 41 / 32R
EL. 107'-6"	NOS.	LOC. ON DWG. 500041

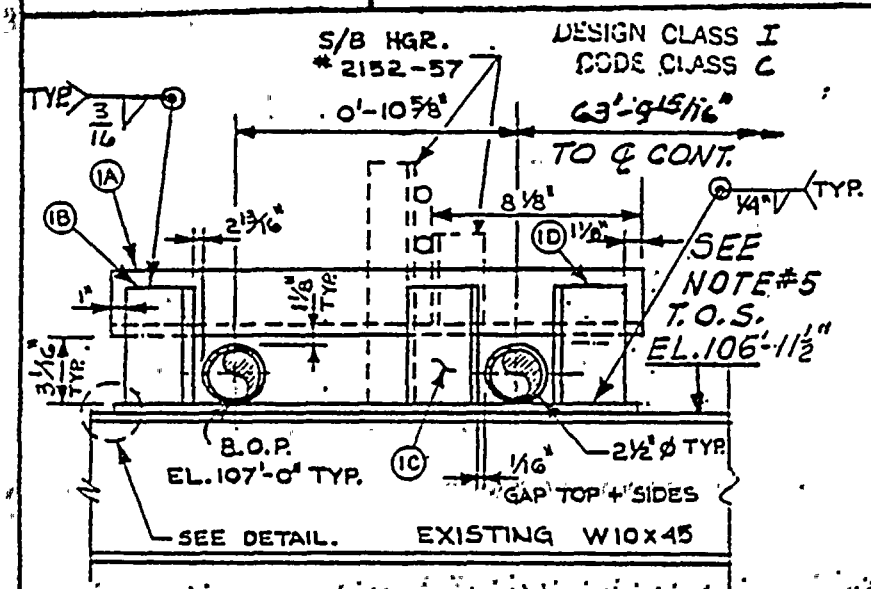

SECTION A-A
LOOKING N.E.

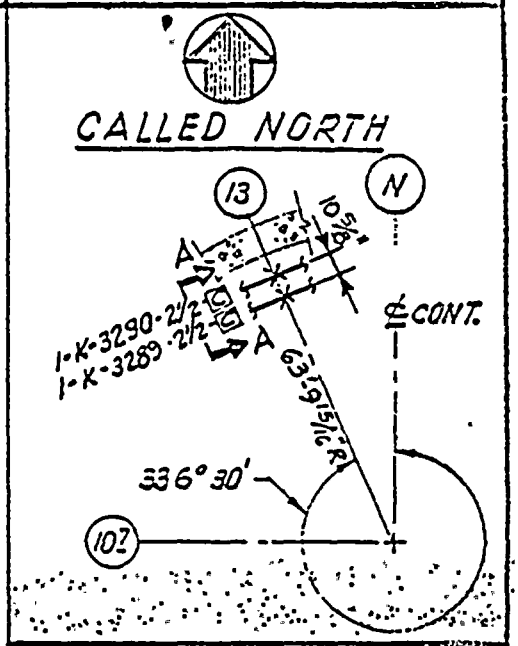

LOCATION PLAN

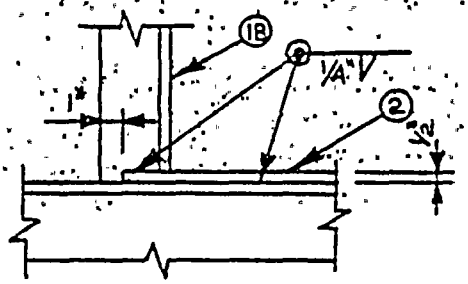

DETAIL ITEM 1B COPE

AS - BUILT
FOR DESIGN REVIEW
RECEIVED OCT 12 1981

NO. OF ASSEMBLIES REQUIRED 1

A/B 2-12-81 2A

NO.	REQD	MATERIALS
1	1	L3x3x½ A) 24½" B) 6" C) 5½" D) 5½"
2	1	PL 4x½, 1'-11" LG.

CHG. 2

PER ECO # M-111 CHANGED LOC.

RM WORKED REV. 2

P G & E CO.

SHEET 24 OF SHEETS

DRAWING NO. 049253

REV 2

DW DRW. M Johnson 3-31-80 CHKD: CHG RE-2 Ckt. Chg'l HUR & THURMAN 4-1-80

76-1117-1

AREA 1F	1-K-3290-2½ LINE 1-K-3289-2½ C/C	HANGER SYMBOL 41 / 33R
EL 107'-6"		LOC ON DWG 500041

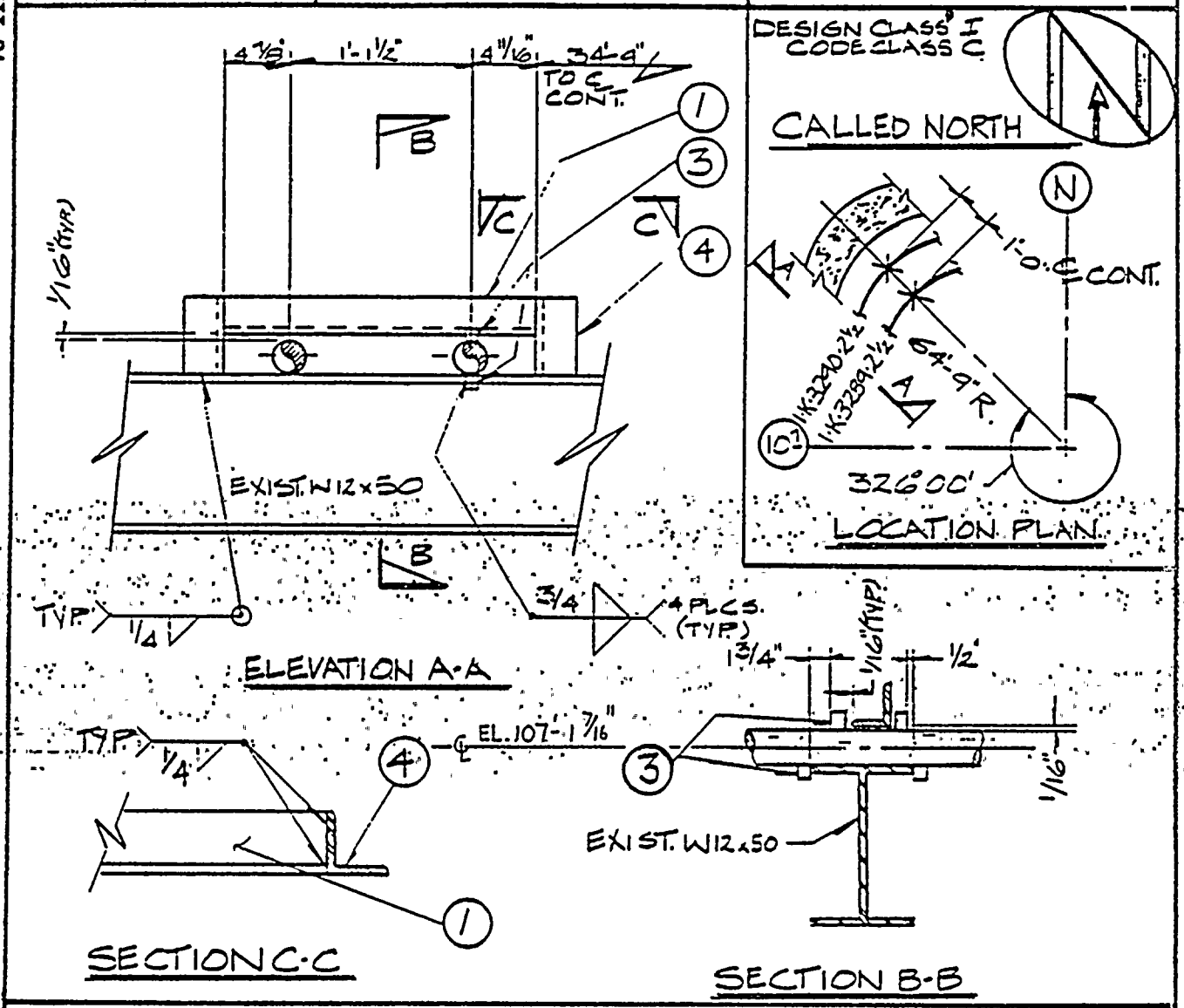

NO OF ASSEMBLIES REQUIRED 1

NO	REQD	MATERIALS PER ASSEMBLY
1	1	L 3"x3"x½" 1'-11 1/16" LG.
2	—	.
3	4	LUG 3/4"x3/4"x3/4" (WELD TO PIPE).
4	2	L 3"x3"x½", 0'-6" LG.
		AS BUILT

FOR DESIGN REVIEW RECEIVED OCT 5 1981		DSGN / DWN RMC 4/1/80 / CHKD SJ 4/2/80	DRAWING NO 049253	
PROJECT: .	UNIT: /	SHT 25 OF SHTS	P G & E CO	ISSUE / REV 2
				MICROFILM

76-113

AREA 1F	LINE NOS. T-K17-2314-3-[C] 1-K-3290-2½-[C] 1-K-3289-2½-[C]	HANGER SYMBOL 41 / 35R
EL. 107'-6"		LOC. ON DWG. 500041

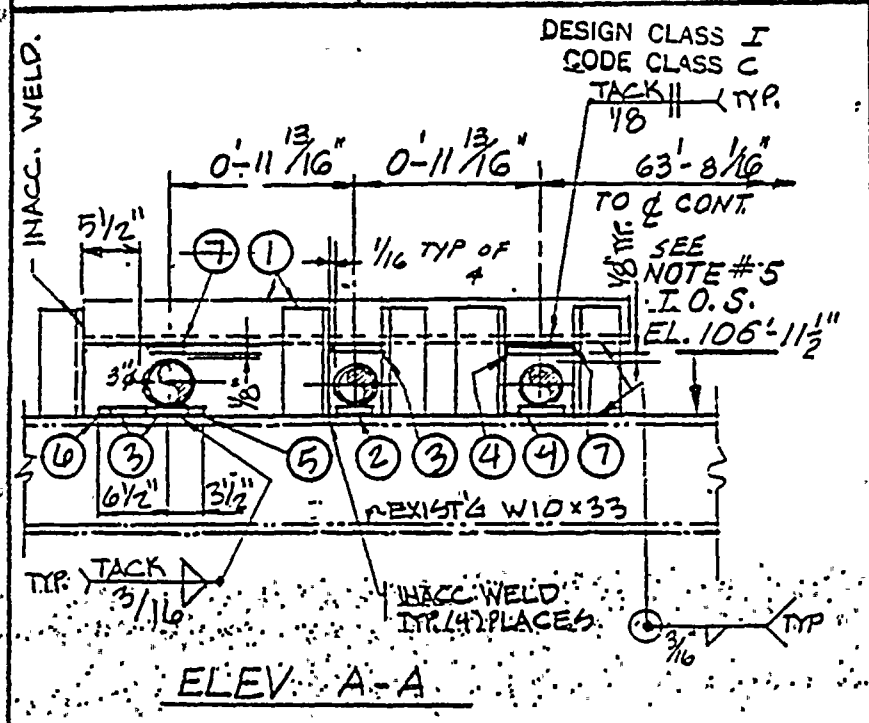

ELEV. A-A

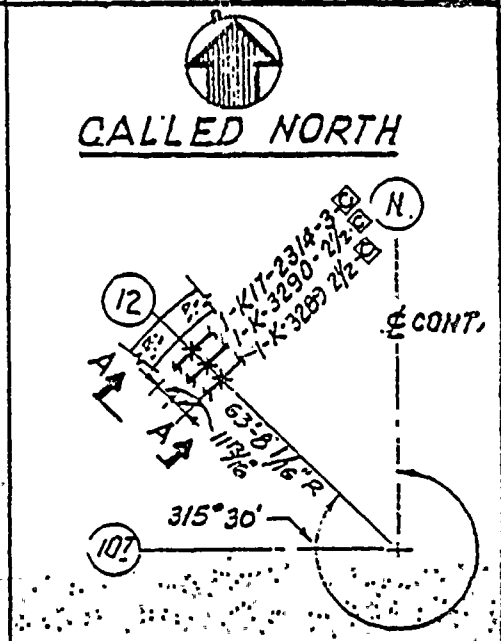

LOCATION PLAN

AS-BUILT
FOR DESIGN REVIEW
RECEIVED ~~OCT 5 1981~~

NO. OF ASSEMBLIES REQUIRED 1

NO.	REQD	MATERIALS
1	1	L 3×3×½ (6 MEMBERS) T.L. = 5'-8", (5) 6½" LG. (1) 2'-11 3/8" LG.
2	1	BAR 3×3/4, 0'-6" LG.
3	3	(2) BAR 3×½, 0'-6" LG. (1) 4×½, 0'-6" LG.
4	2	BAR 3×½, 0'-3" LG.
5	1	BAR 2×½, 0'-6" LG.
6	1	BAR 1×½, 0'-6" LG.
7	2	BAR (1) 3×¼, 0'-7¼" LG. (1) 3×¼ - 0'-3" LG

CHG. 2: DELETED 1-VERT. MEMBER & RELOCATED ANOTHER VERT. MEMBER FOR 5¼" CLEARANCE & ADDED ITEM 3 PER SEIS. MVMT. 2
RM NUCLEAR REV.

	P G & E CO.	DRAWING NO.	
	SHEET 27 OF SHEETS	049253	2 EZA

DSGN RE-2

CHKD: CHG. 2 F.K. R.W. 3-31-80

76-013

AREA 1F	LINE 1-K-2297-6-C	HANGER SYMBOL 41 / 36R
EL. 107'-6"	NOS.	LOC. ON DWG. 500041

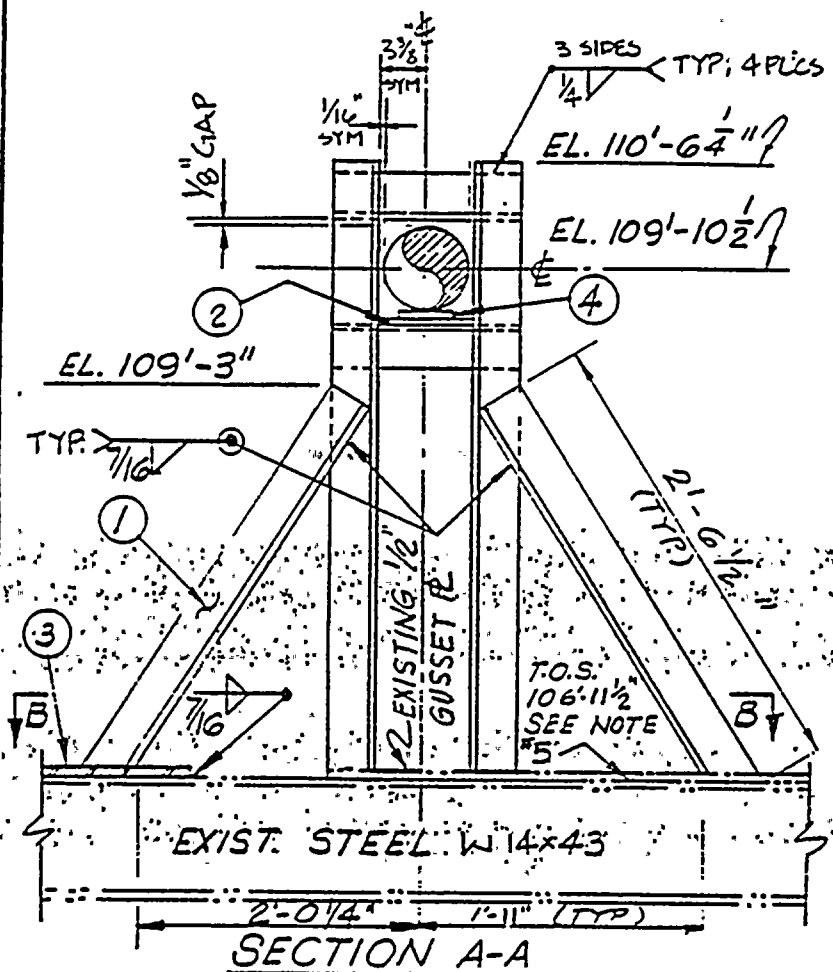

SECTION A-A

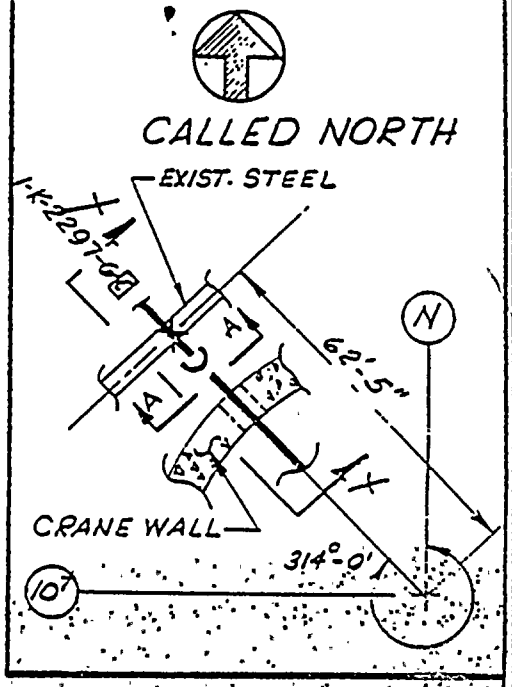

AS - BUILT
FOR DESIGN REVIEW
RECEIVED OCT 5 1981

NO. OF ASSEMBLIES REQUIRED 1

NO.	REQD	MATERIALS
1	6	∠ 3 x 3 x 1/2 — (2) 2'-6 1/2" LG; (2) 3'-5 1/2" LG, (2) 1'-1 1/2" LG
2	—	—
3	1	PL 3/8" x 8 1/8" — 2'-4" LG.
4	—	—
5	1	PL 1/2" x 12" — 1'-0 1/2" LG., CUT TO FIT ≈ 45° ; SEE SECTION B-B

CHANGE 2 PER ECO # M-152 ADDED ITEMS 2 & 3, CHG'D LOC. DIM TO 62'-5"
* SHIM (VERTICAL CLEARANCE OF 1/2") TO 1/16"

P G & E CO. DRAWING NO. 049253
SHEET 28 OF SHEETS

35 M/M NEG

DW 3-31-90 2 RE CKD

AREA 1F	LINE 1-K-2297-6-C	HANGER SYMBOL 41 / 36R
EL 107'-6"		LOC ON DWG 500041

76-1117 Rev

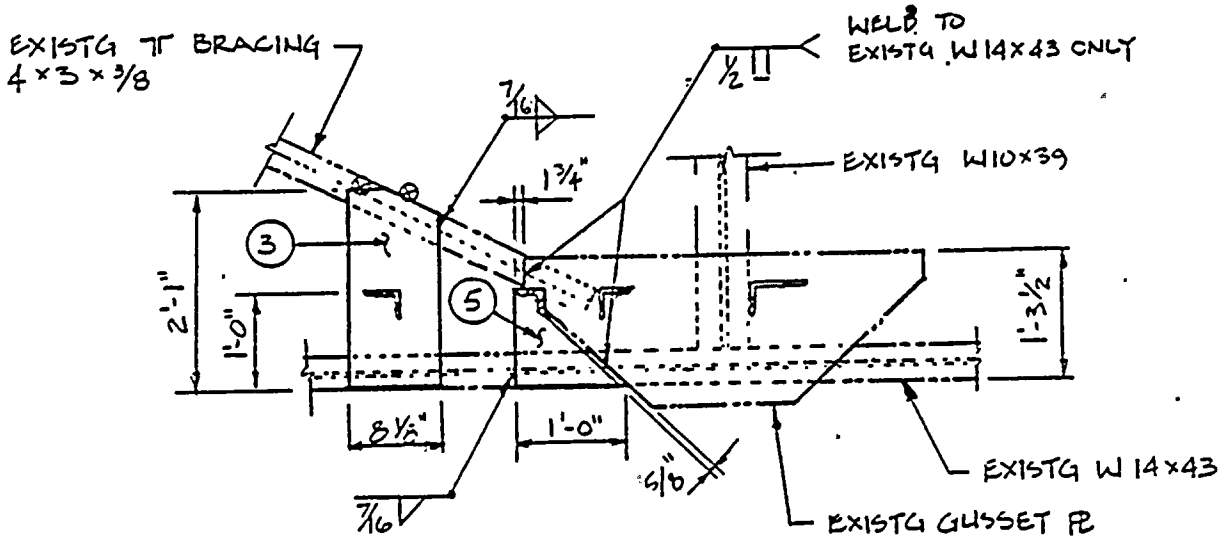

SECTION B-B

⊗ INACC. WELD

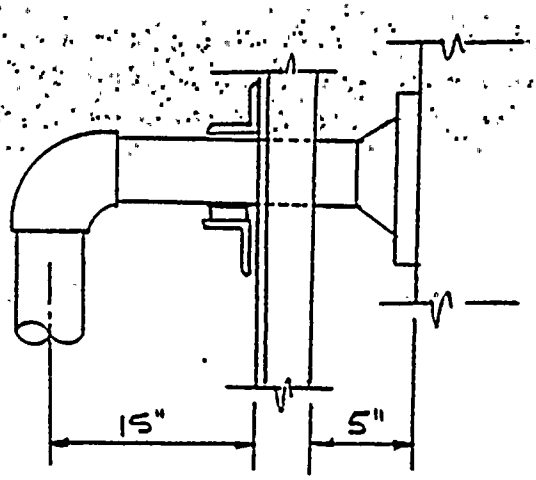

SECTION X-X

AS - BUILT
FOR DESIGN REVIEW
RECEIVED OCT 5 1981

		DSGN	DRAWING NO		
		DWN [illegible] 3-31-82	049253		
		CHKD [illegible] 4/1/82			
PROJECT:	UNIT: 1	SHT 28A OF SHTS	P G & E CO	ISSUE	REV
				MICROFILM	

Cont

AREA I-F	LINE I-K17-2314-3 (C), I-K 2303-4 (C), I-K. 2297-6 (E), I-K2-1161-3/4" (E), I-S6-1162-3/4 (E)	HANGER SYMBOL 41 / 37R
EL 107'-6"		5-544
		LOC ON DWG 500041

76-1116-1

DESIGN CLASS I
CODE CLASS C

CALLED NORTH

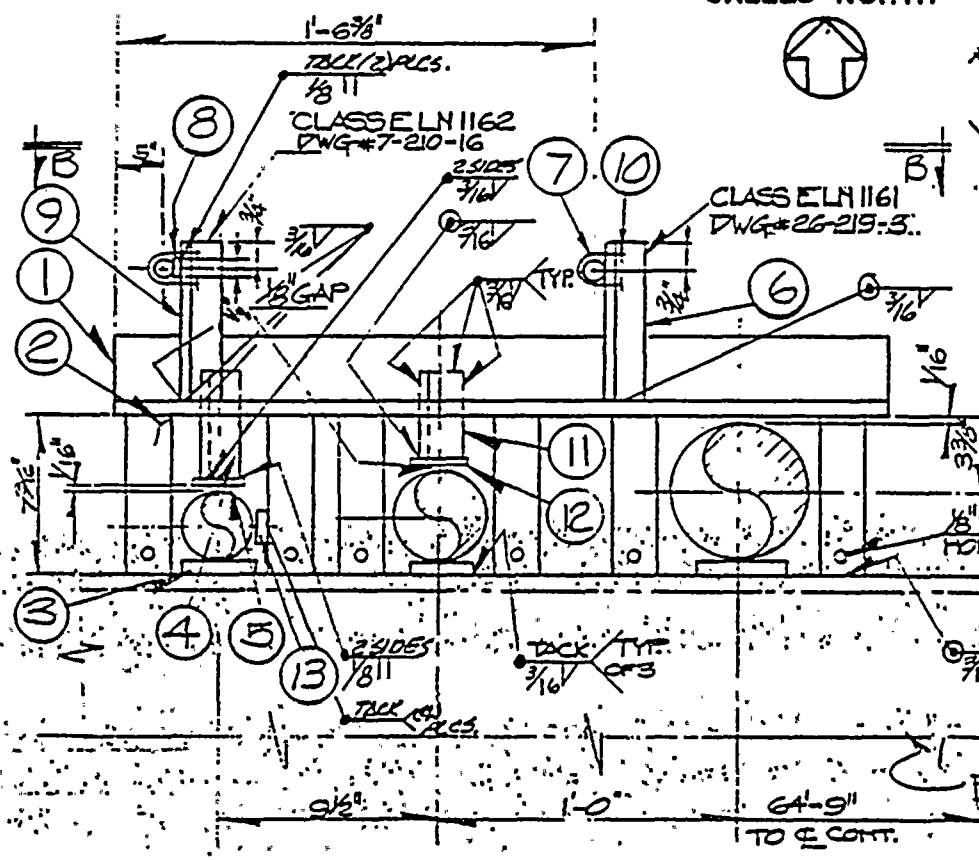

ELEVATION-A-A

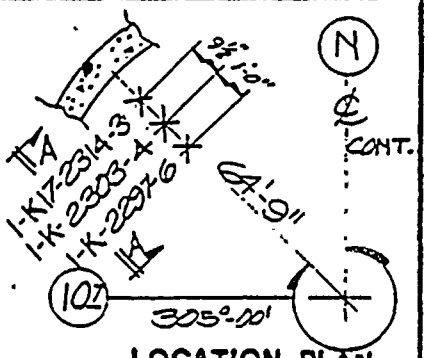

LOCATION PLAN

A-B, 12-8-8 28

NO OF ASSEMBLIES REQUIRED 1

NO	REQD	MATERIALS PER ASSEMBLY
1	1	L 3 1/2"x4"x1/2"-2'-9 1/2" LG.
2	6	2" SCH 80 STANCHION 7 3/16" LG. EA.
3	3	BAR (1) 3"x 7/8", 0'-3" LG., (1) 3"x 7/8", 0'-3" LG., (1) 3"x 7/8", 0'-3" LG.
4	1	L 3"x3"x1/2"-5 1/2" LG.
5	1	BAR 3"x3/8"x3"
6	1	L 2"x2"x 3/8", 0'-8" LG.
7	2	3/4" FIG. 137
8	1	SHIM BAR 1/2"x 1/4", 0'-2" LG

AS-BUILT
FOR DESIGN REVIEW
RECEIVED OCT 5 1981

MAT'LS CONT. SHT. 29A

DSGN	DRAWING NO
DWN 4/2/80	049253
CHKD 4-1-80	

PROJECT:	UNIT: 1	SHT 29 OF SHTS	P G & E CO	ISSUE	REV
					3

MICROFILM

76-1117 Rev 3-76

AREA F-F	LINE I-K17-2314-3, I-K 2303-4, I-K 2297-6, I-K2-1161-9/4, I-S6-1162-9/4	HANGER SYMBOL 41 / 37R
El. 107'-6"		5-544
		LOC ON DWG 500041

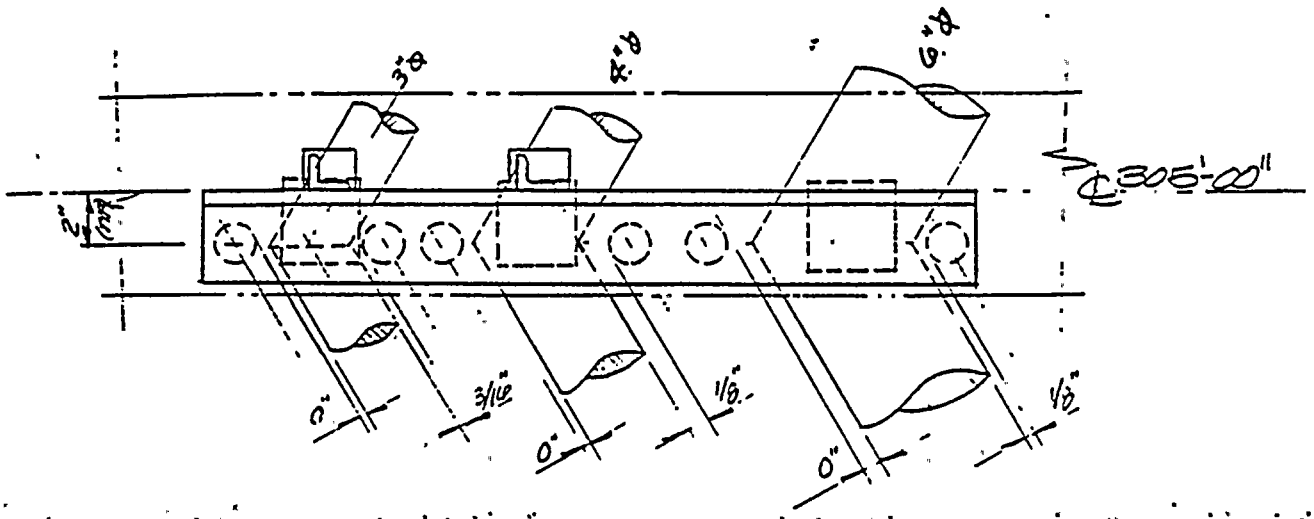

PLANVIEW B-B

AS-BUILT
FOR DESIGN REVIEW
RECEIVED OCT 5 1981

MAT'LS. CONT. FROM SHT. 29.

NO. OF ASSEMBLIES REQUIRED 1

NO.	REQ'D	MATERIALS PER ASSEMBLY
9	1	L 2x2x1/4, 0'-7 7/8" LG.
10	8	1/4" HEX NUT
11	1	L 3x3x1/2, 0'-4 1/2" LG.
12	1	BAR 4x3/8, 0'-4" LG.
13	1	BAR 1x3/8, 0'-3" LG.

		DSGN	DRAWING NO
		DWN JACKSON 4/2/80	049253
		CHKD MAL 4/2/80	
PROJECT:	UNIT: 1	SHT 29 OF SHTS	P G & E CO
			ISSUE 2 REV

MICROFILM

AREA TF	LINE A.1-K17-2314-3 B.1-K-2303-4 C.1-K-2297-6	HANGER SYMBOL 41 / 39A
EL 107'-0"		LOC ON DWG 500041

DESIGN CLASS I
CODE CLASS C

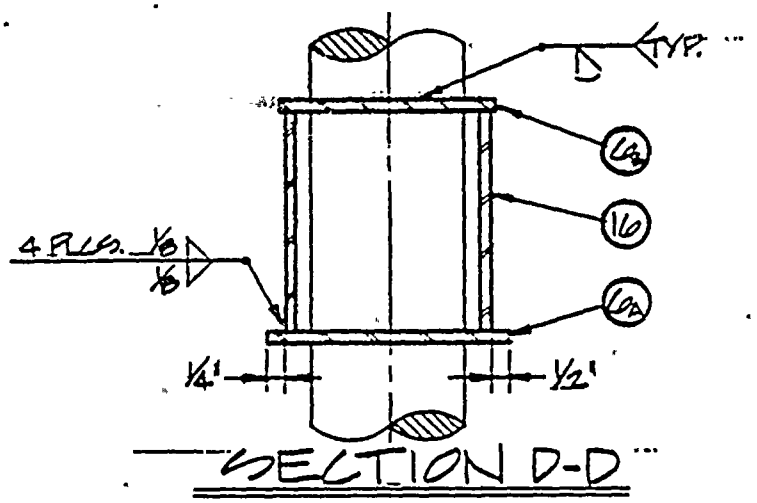

SECTION D-D

CALLED NORTH

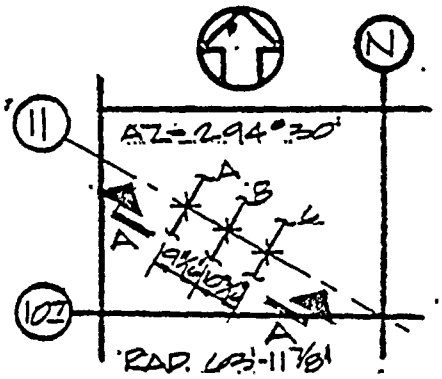

LOCATION PLAN

AB 2-6-81

NO OF ASSEMBLIES REQUIRED

NO	REQD	MATERIALS PER ASSEMBLY
1	2	L 3" x 3" x 1/2", 0'-7 3/16" LG. EA.
2	2	L 3" x 3" x 1/2", 0'-9 3/4" LG. EA.
3	2	L 3" x 3" x 1/2", 2'-5 3/16" LG. EA.
4	—	—
5	1	C.S. BAR 3" x 1/2" x 7 5/16"
6	2	(A) PL 1/4" x 6 3/4" x 0'-7", (B) PL 1/4" x 6" x 0'-6 1/4" (CUT TO FIT)
7	4	C.S. LUG 3/4" x 1/2" x 1 1/2" EA.
8	2	C.S. PL 3 7/8" x 3/8" x 8 7/8" (CUT TO FIT INSIDE W10x53)
9	1	C.S. BAR 3" x 1/2" x 0'-5"
10	1	L 2 1/2" x 2 1/2" x 1/2", 0'-9 13/16" LG.
11	1	L 2 1/2" x 2 1/2" x 1/2", 0'-7" LG.
12	1	BAR 3" x 1/2" x 0'-5"
13	1	BAR 2 7/8" x 3/8" x 2 7/8"
14	1	BAR 3" x 1" x 9 1/2"
15	1	BAR 3" x 1/2" x 3 1/4"
16	2	BAR 1 7/8" x 1/4" x 0'-6 3/4" LG. EA.

AS-BUILT
~~FOR DESIGN REVIEW~~
RECEIVED OCT 9 1981

	DSGN	DRAWING NO	
	DWN GG. 3-10-81	049253	
	CHKD THH(MM) 4-9-81		
ROJECT:	UNIT: # 1	SHT 31 OF SHTS	P G & E CO

ISSUE 43 REV

MICROFILM

76-1117 Rev

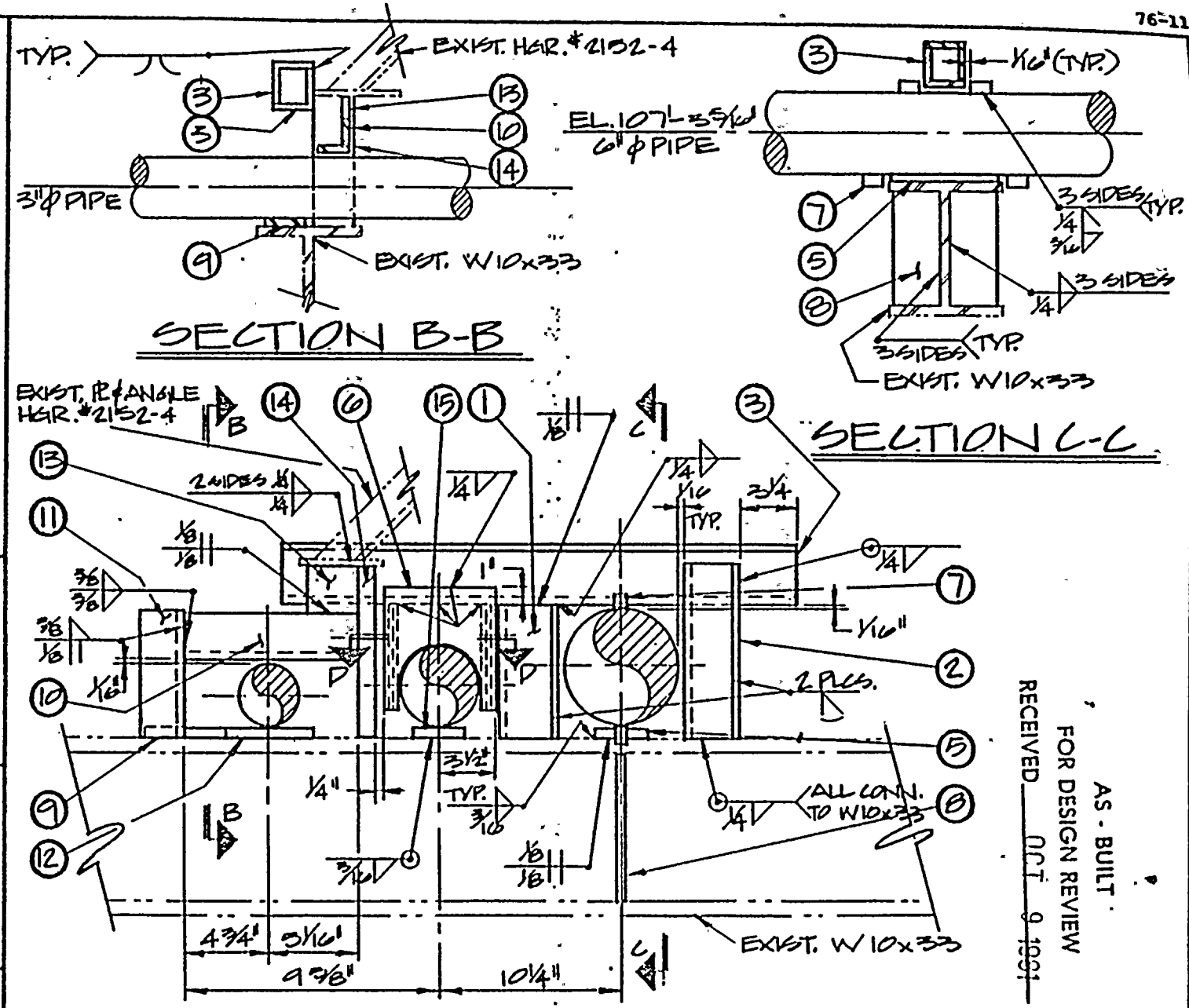

AS - BUILT
FOR DESIGN REVIEW
RECEIVED OCT 9 1991

AREA F
EL 107'-6"
LINE A-1-KT-23514-3 6
BLK-23033-4 6
BLK-22947-6 6
HANGER SYMBOL
LOC ON DWG 50004
4T
SHA

PROJECT:
UNIT: #1
DSGN
DWN GS 4-1-91
CHKD
SHT 1A OF SHTS
P G & E CO
DRAWING NO 049253
ISSUE
REV 4B
MICROFILM

AREA 1F	LINE 1-K-2291-6 C	HANGER SYMBOL 52 / 1A
EL 107'-6"		LOC ON DWG 500052

DESIGN CLASS I
CODE CLASS C

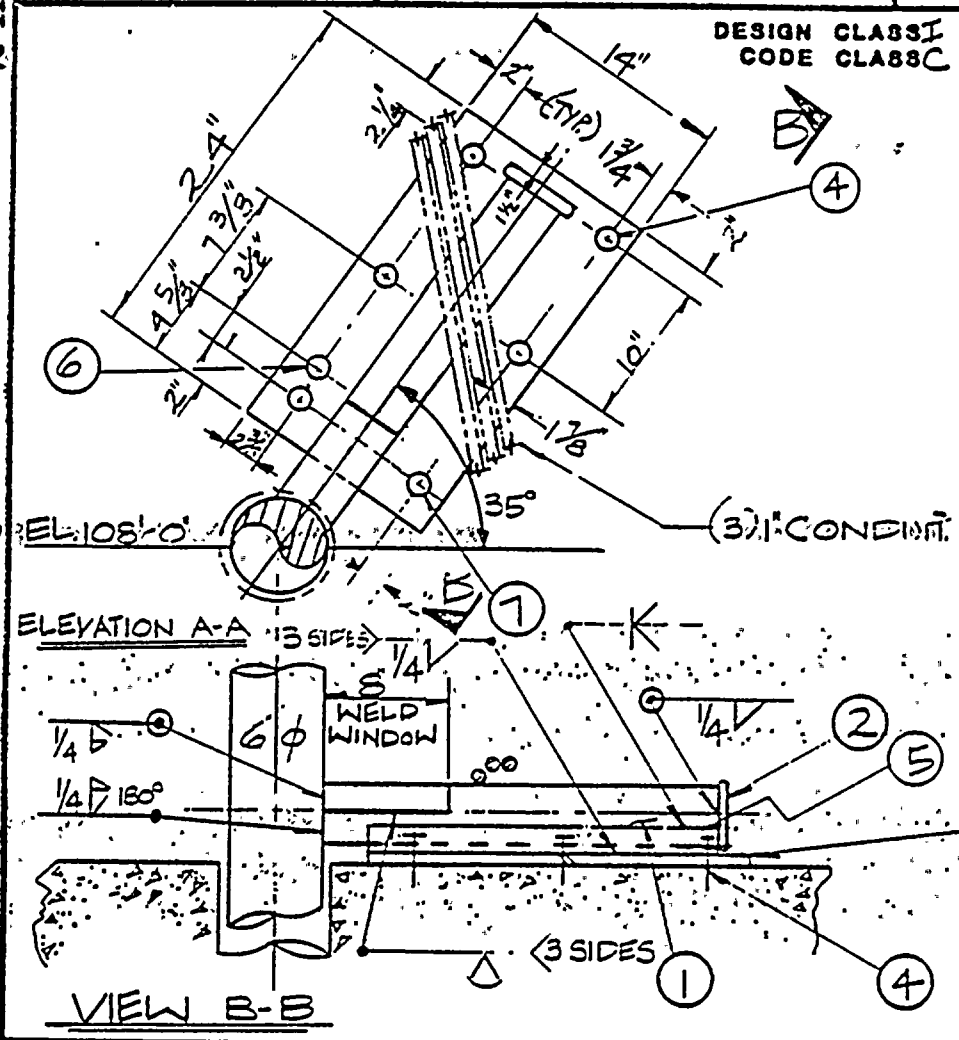

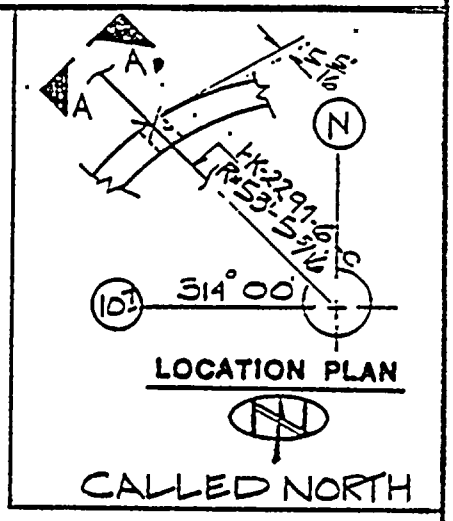

AS - BUILT
FOR DESIGN REVIEW
RECEIVED OCT 5 1981

NO OF ASSEMBLIES REQUIRED 1

NO	REQD	MATERIALS PER ASSEMBLY
1	1	4" SCH. 40 PIPE, 2'-2 1/2" LG. (CUT TO FIT).
2	1	PL 1/2" x 5" x 0'-5" (5" ϕ CAP).
3	1	PL 1/2" x 14" x 2'-0" LG. W/(6) 15/16" ϕ HOLES, (1) 3/4" ϕ HOLES.
4	6	S-78 PHILLIPS CONC. FASTENERS
5	1	C 4x7.5 1'-9 3/4" LG. (CUT TO FIT).
6	1	3/4" KWIK BOLT & NUT.
7	6	WASHERS (WELD TO ITEM #3 FOR (4) FASTENERS ONLY.)

	DSGN	DRAWING NO		
	DWN RMO 3/3/82			
	CHKD WH 3-6-82	049298		
PROJECT: DIABLO CANYON	UNIT: 1	SHT 41 OF SHTS	P G & E CO	ISSUE / REV
				MICROFILM

76-813

AREA 1F	LINE NOS. 1-K17-2314-3-C, 1-K-2303-4-C, 1-K-2297-6-C	HANGER SYMBOL Y; HORIZ. REST. (41 / 40R)
EL. 107'-6"		LOC. ON DWG. 500041

DESIGN CLASS I
CODE CLASS C

AS - BUILT
FOR DESIGN REVIEW
RECEIVED ~~OCT 5 1981~~

FROM ANALYSIS 4A-24

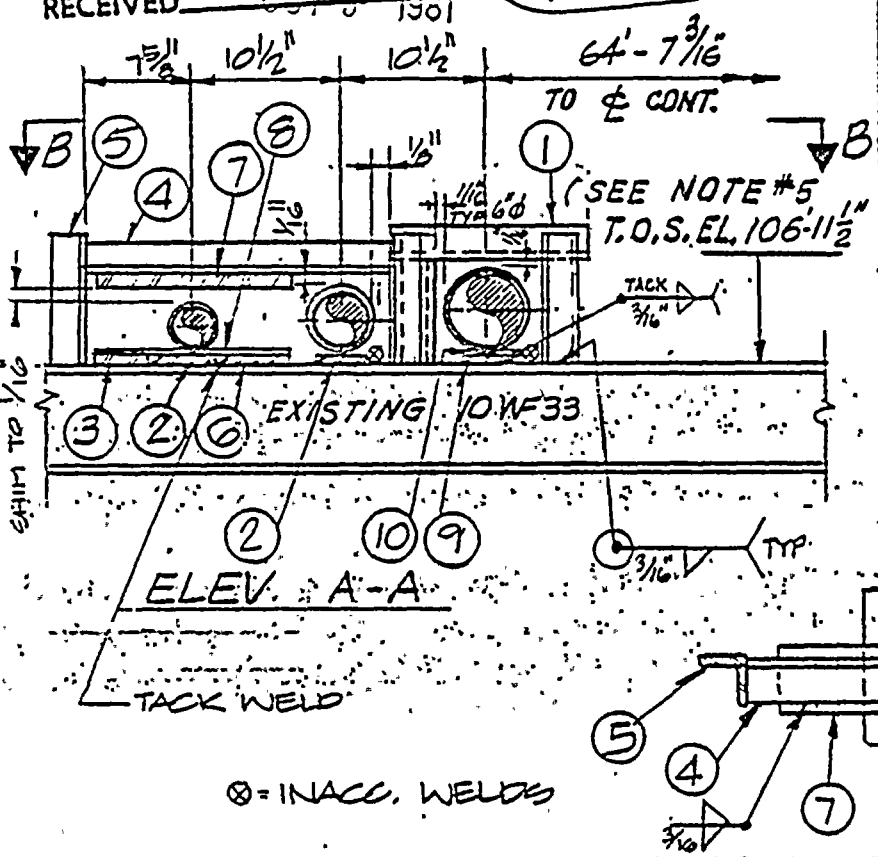

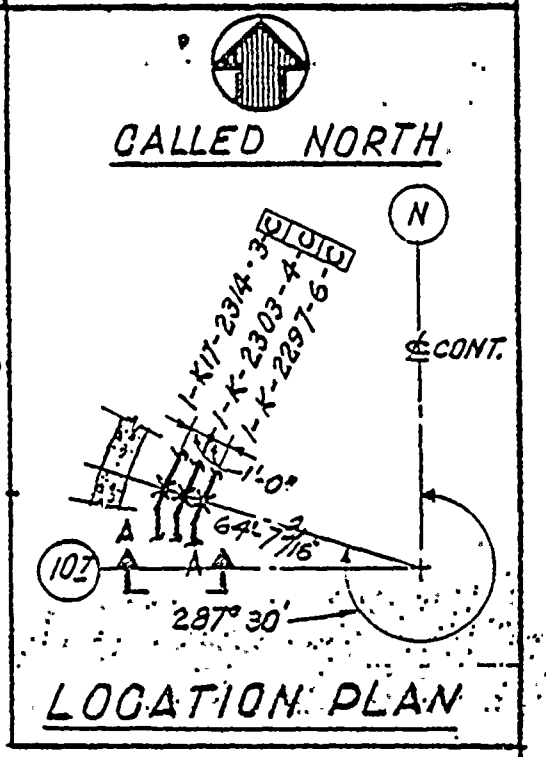

NO. OF ASSEMBLIES REQUIRED 1

FOR DATA SEE FILE 33

NO.	REQD	MATERIALS
1	1	L3"x3"x1/2" (5 MEMBERS), (3) 9 3/4" LG. EA. (1) 7" LG. (1) 1'-3 1/8" LG.
2	2	3" x 1/2" x 3" BAR
3	1	3" x 1/2" x 0'-5" LG.
4	1	L 3" x 3" x 1/2" 1'-9" ± LG.
5	1	L 3" x 3" x 1/2" 0'-9 1/8" ± LG.
6	1	5" x 1/2". ÷ 0'-5" LG. BAR
7	1	BAR 4" x 1'-0" LG. THK. BY FIELD
8	1	BAR 3" x 1/2" x 1'-1" LG.
9	1	SHIM 3/16" x 3" x 3"
10	1	SHIM 1/8" x 3" x 3"

REVISED REV 3

P G & E CO.	DRAWING NO.	REV
SHEET 32 OF SHEETS	049253	3A

DSGN RE-3 TEC 3/30/90 CHKD: CHG 3: FK. SJ 4.2.90

76-813

AREA 1F	LINE 1-K17-2314-3-C 1-K-2303-4-C	HANGER SYMBOL Y & HORZ. RESTR. (41 / 41R)
EL. 107'-6"	NOS. 1-K-2297-6-C	LOC. ON DWG. 500041

DESIGN CLASS I
CODE CLASS C

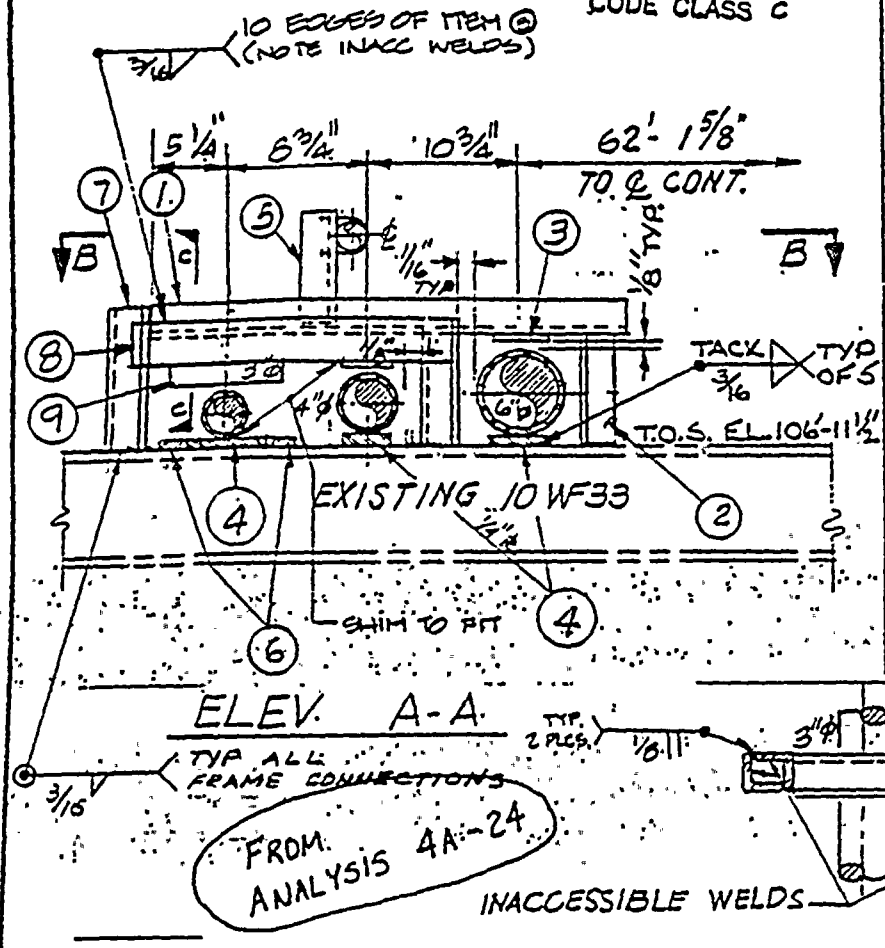

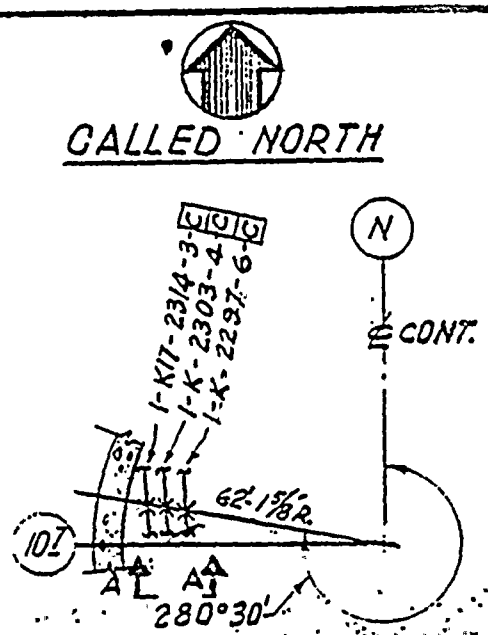

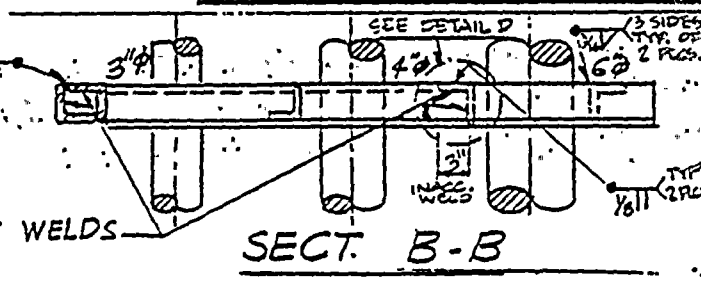

NO. OF ASSEMBLIES REQUIRED 1

FOR DATA SEE FILE 33

NO.	REQD	MATERIALS
1	1	∠ 3" x 3" x 1/2" , 2'-7 1/4" LG — AS-BUILT
2	2	∠ 3" x 3" x 1/2" 7 3/4" LG — FOR DESIGN REVIEW
3	1	PL 3" x 1/2" x 4" — RECEIVED OCT 5 1981
4	3	(1) BAR 3" x 3/8" x 3" LG, (1) BAR 3" x 1/4" x 3" LG
5	1	∠ 2" x 2" x 3/8" 7" LG (EXIST. HGR 7-210-15 CLASS E)
6	2	PL 2" x 3/8" x 3"
7	2	∠ 3" x 3" x 1/2" & 0'-10 3/4" LG.
8	1	∠ 3 1/2" x 3 1/2" x 1/2" 1'-10 1/8" LG. COPE TO FIT ITEMS 7 & 2 AS SHOWN
9	1	BAR 3" x 1" x 8" — REVISED REV. 3

P G & E CO.	DRAWING NO.	REV. 3
SHEET 33 OF SHEETS	049253	

DSGN RE-3 TC 3/31/80 CHKD: CHG.: 3: FK. 4-4-80

76-1117 Rev 3-76

AREA 1F	LINE 1-K17-2314-3-E 1-K-2303-4-E 1-K-2297-6 E	HANGER SYMBOL 41 / 41R
EL 107'-6"		LOC ON DWG 500041

FROM ANALYSIS 4A-24

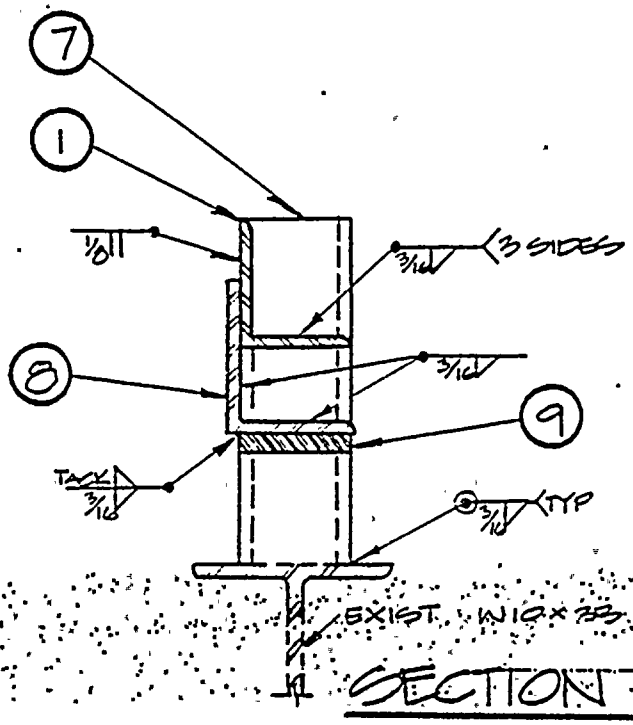

SECTION C-C

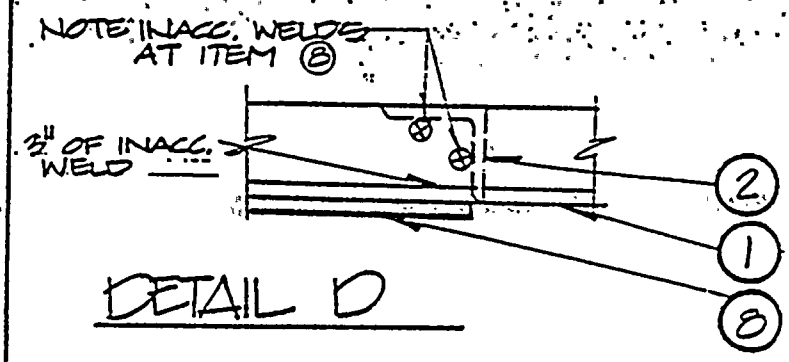

DETAIL D

AS - BUILT
FOR DESIGN REVIEW
RECEIVED OCT 5 1981

		DSGN DWN TEC 4/2/80 CHKD S.J. 4-2-80	DRAWING NO 049253	
PROJECT:	UNIT: /	SHT 3A OF SHTS	P G & E CO	ISSUE 3A REV

MICROFILM

ITEM C

PIPING AND INSULATION SPECIFICATIONS

62-1504 (3000 8/68)

ITEM C

PIPING SPECIFICATION INDEX

SPEC.	MATERIAL	DESIGN COND. PRESS. PSIG.	DESIGN COND. TEMP. °F	MDS/SPEC DWG.	CHG. No.
B	RED BRASS	150	406	047205	
C	COPPER	125	100	047207	
C1	COPPER	125	100	047208	
D	CAST IRON	150	150	047209	
E	POLYVINYL CHLORIDE (PVC)	150	75	047214	
F	CARBON STEEL SARAN LINED	125	200	047216	
F1	CARBON STEEL POLYPROPYLENE LINED	250	200	058863*	17
G	CARBON STEEL PARALINED	150	180	047218	
G1	CARBON STEEL PARALINED	100	125	047219	
H	CARBON STEEL GALVANIZED	275	100	047221	
J	CARBON STEEL PICKLED	150	500	047224	
K	CARBON STEEL (INCLUDES 152 (W))	150	500	047225	
K2	CARBON STEEL (302 (W))	405	650	047227	
K6	CARBON STEEL (902 & 1502 (W))	1030	650	047231	
K12	CARBON STEEL	600	400	047237	
K13	CARBON STEEL (602 (W))	600	650	047238	

* FOR DIABLO CANYON CONDENSATE POLISHING SYS.

CHIEF								
PROJ. MECH. ENGR.								
CHANGE NO.		17						
COORDINATED APPROVAL FOR CONSTRUCTION								

REGISTERED PROFESSIONAL ENGINEER D. V. KELLY No. 9269 MECHANICAL STATE OF CALIFORNIA

UNITS 1 & 2

COAST VALLEYS DIVISION

CHG.	DATE	DESCRIPTION	GM	BY	CH.	APPD.
16	10-18-78	ADDED BRAZE SEAL NOTES (INSIDE PANEL) TO SPECIFIC NOTES SHEET 5A PER DCO-G-M-027	169972	RY		
13	10-29-73	ADDED SHEET 5A (SPEC. "S" NOTES)	169972	RY		
17	5-6-80	ADDED F1 SPEC & REVISED K12 SPEC PER DCO-EM-94	190270	T.O	MGG	
15	8-14-75	ADDED EXEMPTION NOTE TO SPECIFIC NOTES-SHT. 5A	163972	CK	RY	
14	9-6-74	REVISED SPEC. S NOTES - SHT 5A	167027	JGS	RY	

APPROVED BY

SUPV. BY B. KASCHUBE
DSGN. G. BERNHOFF
DR. S.A.B.
CH.
O.K. GAK
DATE 10-8-71
SCALE NONE

PIPING SPECIFICATIONS
INDEX, GENERAL & SPECIFIC NOTES, SERVICES
DIABLO CANYON
DEPARTMENT OF ENGINEERING
PACIFIC GAS AND ELECTRIC COMPANY
SAN FRANCISCO, CALIFORNIA

DRAWING LIST
SUPERSEDES REV. 9
SUPERSEDED BY (INCL 5A)
SHEET NO. 1 of 9 SHEETS
DRAWING NUMBER 049021
CHANGE 17

RM INDEXEL REV. 17

35 M/M NEG 17

PRINTED ON DIEPO NO. 1000H CLEARPRINT 5-68

PIPING SPECIFICATION INDEX

SPEC.	MATERIAL	DESIGN COND. PRESS PSIG.	DESIGN COND. TEMP. °F	MDS/SPEC DWS.	CHS. No.
K14	CARBON STEEL	1085	600	047239	
K15	CARBON STEEL	1085	600	047240	
K16	CARBON STEEL	1415	450	047241	
K17	CARBON STEEL (2503 (W))	2500	650	047242	
S	STAINLESS STEEL TUBING (153, 154, 2505, 2506 (W))	2500	650	047282	8
S1	STAINLESS STEEL (601 (W))	700	400	047283	
S2	STAINLESS STEEL (151 (W))	150	500	047284	
S3	STAINLESS STEEL (301 (W))	370	650	047285	
S5	STAINLESS STEEL (901 & 1501 (W))	1400	650	047287	
S6	STAINLESS STEEL (2501 & 2502 (W))	2580	650	047288	
S8	STAINLESS STEEL	50	100	047290	

FRONT	1	3	5	6	8
BACK	2	4	5A	7	

60591

76-897

GENERAL NOTES

1. Power piping shall conform to the edition of ANSI B31.1.0, ANSI B31.7 or ASME Boiler Code Section I called out in Spec. 8711 or Spec. 8707 plus addenda.

2. Butt weld end preparations shall conform to PFI STD. ES-21 for TIG root pass welding only.

3. Torque on all bolts and studs per Crane Catalog 60, Pages 383 and 384 lube with High Temperature lubricant.

4. Reactor Coolant Piping and Pressurizer Surge Line, refer to (W) Specs. G-676496 and G-676343 for field and shop fabrication details.

5. Piping Code Key

PG&E CODE	NUCLEAR CODE CLASS	DESIGN CLASS
A	NUCLEAR CLASS I	I
B	NUCLEAR CLASS II	I
C	NUCLEAR CLASS III	I
E	STANDARD	II
G	NFPA PIPING	I

6. PG&E Code Classes A, B, or C piping, as indicated on piping schematics, will have base materials, documentation, N.D.E., welding and Quality Assurance as required by the 1969 edition of ANSI B31.7 and 1970 addenda, Nuclear Power Piping Classes I, II or III and Code Cases accepted by PG&E and by the State of California Division of Industrial Safety.

7. PG&E Code Class E piping shall comply in all respects with the 1967 edition of ANSI B31.1 and addenda accepted by PG&E.

8. Piping branch connections per MDS/Spec. Dwg. 049019 unless noted otherwise on area drawings.

9. Ultrasonic examination on Code Class A materials is required per ANSI B31.7 Class I in addition to supplementary tests listed on individual pipe specs.

35 M/M NEG 3

PIPING SPECIFICATIONS	P G & E CO. SHEET 3 OF SHEETS	DRAWING NO. 049021	CHANGE 11

. Welded S.S. pipe conforming to ASTM A 358 Class I of same grade may be substituted wherever A 312 seamless construction is specified in sizes 8" or larger. Where ASME Boiler & Pressure Vessel Code Sect. XI inservice inspection requirements make seamless desirable, it should be used where available.

11. Stainless steel materials of carbon content less than 0.04% shall not be substituted without approval of P.G.&E. Co.

12. No bending thinning allowance is made on the calculations of minimum wall of piping listed under the various piping specifications. Any piping to be bent must meet or exceed the minimum wall thicknesses listed after bending, or meet or exceed the minimum wall thickness of the nominal wall piping Specs. after bending. This must be verified by ultrasonic or other measuring methods or a bending thinning allowance made for piping in the bent sections of pipe per ANS B31.1.0 - 1967, Table 102.4.5.

. ASTM A 53 pipe shall not be used in Code Class A or B (B 31.7 Class I or II) Systems but may be used in B 31.1 Systems and B 31.7 Class III, if allowed by the particular piping Spec.

14. A 105 Grade I or II Fittings ordered prior to 1971 Revision of A105 are acceptable.

60591

SPECIFIC NOTES

SPEC.	
F	Do Not Use This Spec. For Code Class A or B Piping Systems.
F1	Do Not Use This Spec. For Code Class A or B Piping Systems.
G	Do Not Use This Spec. For Code Class A or B Piping Systems.
G1	Do Not Use This Spec. For Code Class A or B Piping Systems. This Spec. is to be Used For Auxiliary Salt Water System Only Spec. 8831R & 8841. Refer To File 116.30 D.C. For Additional Details.
H	Do Not Use This Spec. For Code Class A or B Piping Systems.
J	Do Not Use This Spec. For Code Class A or B Piping Systems.
K	Do Not Use This Spec. For Code Class A or B Piping Systems.
K14	Mainsteam Dump And Crosstie Systems Downstream of Isolation Valves - Refer To P.G.&E. Spec. 8707 For Additional Details of Welding, Q.A., N.D.E., Etc.
K15	Mainsteam Steam Generator Outlet to Isolation Valves Outside of Containment - Refer to P.G.&E. Spec. 8707 For Additional Details of Welding, Q.A., N.D.E., Etc.
K16	Feedwater and Steam Gen. Blowdown, and Aux. F.W. from Steam Generators to Isolation Valves per ASME Boiler Code Sect. I, Refer To P.G.&E. Spec. 8707 For Additional Details of Welding, Q.A., N.D.E., etc.
S1	On Lines Under Jurisdiction of ASME Sect. XI Requirements as Shown on Dwg. #102028 Seamless Pipe And Fittings Shall Be Used Wherever Available To Minimize Inservice Inspection Requirements. 300Lb Gr. F316 Stainless Steel Flanges may be Substituted for the 600Lb Gr. F304 Stainless Steel Flanges Specified for RHR Loops Only. Pressurizer Relief Lines will have Specified Lengths of Sch. 80 Pipe and Fittings. other Requirements are as specified on S1 Spec.
S1,S2 S3,S5	Radiography of Longitudinal Welds on ASTM A358 Pipe (Class I) is Required for ANSI B31.7 Class I & II Only, Not For Class III, Provided 100% Dye Penetrant Inspection Is Performed on Class III. Refer to 1970 addenda of ANSI B31.7 App. A, Table A.7(b)
S2	Change 4 of this Spec. allowed the use of Sch.10S pipe in the 10"&12" Sizes. Material purchased to this Spec. before Change 5 is acceptable

35 MM NEG 17

SPECIFIC NOTES

SPEC

FITTINGS ON TUBING RUNS IN THE SYSTEMS LISTED BELOW SHALL BE:

1. SOCKET-WELD OR HI-SEAL AT THE ROOT VALVE.
2. SOCKET-WELD BETWEEN ROOT VALVE CONNECTION AND BULKHEAD OR LOCAL INSTRUMENT CONNECTION.
3. HI-SEAL AT BULKHEAD OR LOCAL INSTRUMENT CONNECTION.
4. HI-SEAL, [illegible] OR SOCKET-WELD ON TUBING INSIDE PANEL.*

APPLICABLE SYSTEMS:

A. REACTOR COOLANT
B. CHEMICAL VOLUME AND CONTROL
C. NSS SAMPLING
D. SAFETY INJECTION
E. CONTAINMENT SPRAY
F. RESIDUAL HEAT REMOVAL
G. SPENT FUEL PIT COOLING

EXEMPTION: GAS SAMPLE TUBING, P.G.&E. CODE CLASS E, SHALL BE COVERED BY THE CRITERIA FOR ALL OTHER SYSTEMS, AS SHOWN BELOW.

FITTINGS FOR ALL OTHER SYSTEMS SHALL BE AS FOLLOWS:

1. HI-SEAL, BRAZE-SEAL, OR SOCKET-WELD ON ALL CONNECTIONS EXCEPT BULKHEAD AND INSTRUMENT CONNECTIONS. 16
2. HI-SEAL OR BRAZE-SEAL ON BULKHEAD AND INSTRUMENT CONNECTIONS. (BRAZE-SEAL PREFERRED)

DYE PENETRANT EXAMINATION OF THE SOCKET-WELD JOINTS MUST BE PERFORMED AND RECORDED. (FOR CLASS I SYSTEMS ONLY.)

*EXISTING BRAZE-SEAL FITTINGS INSIDE MECHANICAL PANELS ARE ACCEPTABLE AS IS. 16

15 PER ECO M-885 6-24-75

PIPING SPECIFICATIONS	P G & E CO.	DRAWING NUMBER	REV.
	SHEET 54 OF SHEETS	049021	16

61-4344 (NEW 12-74) MICROFILM

60598

SERVICE INDEX

SPEC.	(W) SPEC.	SERVICE DESCRIPTION	PIPING SCHEM. DWG.
K		Air Ejector	102002
K		Component Cooling System	102014
S2		Chemical and Volume Control System	102008
S6		Excess Letdown Ht. Xchg. Inlet	
S6		Excess Letdown Ht. Xchg. Outlet	
S1		Letdown Heat Exchanger Inlet	
S6		Regenerating Heat Exchanger Inlet	
D		Circulating Water System	102017
K		Chlorination Piping From Chlorine Ton Tanks To Chlorinator	
G1		Aux. Salt Water System	
D,K		Saw Dust Injection Water	
D,B		Traveling Screen Washwater	
G		Condenser Water Box Vents	
K		Compressed Air System	102025
C		Instrument Air After Filter Outlet Valve	
C		Containment Instrument Air	
K		Condensate System	102002
K12		Condensate Booster Pump Discharge	
K12		Feedwater Heater No. 2-A, B, C, Outlets	
K		Condenser, Steam Side	102017
F1		Condensate Polishing System	102002
K		Make-Up Water System	102016
S2		Primary Make-Up Tank Inlet	
S2		Primary Water Make-Up Pump Discharge	

17

NEG 17

35

SERVICE INDEX

	SPEC.	SERVICE DESCRIPTION	PIPING SCHEM. DWG
		Sea Water Evaporator	102016
		Sea Water To Evaporator	
		Distillate & Brine Recirculation	
16		Feedwater System	102003
		Fire Protection System	102018
		F.W. Heater Drip System	102005
2		Drips From F.W. Heater No. 1 - A, B, C	
2		F.W. Heater No. 1 - A, B, C, Shell Vents & Drains	
		Lube Oil System	102020
		All Piping Except Vents	
		Reactor Coolant Piping System	102007
1	601	Pressurizer R.V. Discharge	
6	2501	Pressurizer Spray Line	
	2501	Pressurizer Surge Line (W)	
	2501	Reactor Coolant Out Loops (W)	
	2501	Reactor Coolant Pump Discharge (W)	
		* Refer to Westinghouse Specs. G676341 For The Pipe And G 676342 For The Fittings	
	2505	Sampling System	102011
		Service Cooling Water System	102015
2	151	Spent Fuel Pit Cooling System	102013

6059r

SERVICE INDEX

SPEC.	(W) SPEC.	SERVICE DESCRIPTION	PIPING SCHEM. DWG.
		Spray Water	
S3	301	Containment Spray Inside Containment	102012
S2	151	Containment Spray Outside Containment	102012
S6	2501	Pressurizer Spray Lines From RCS	102007
K		Auxiliary Steam	102006
	(W)	Cold Reheat	102004
K		Extraction Steam	102005
K2		Steam To Feedwater Heater No. 1 - A, B, C	
K2		Hot Reheat	102004
	(W)	Reheat Steam To L.P. Turbine	
K14,15		Main Steam	102004
K15		Main Steam To Aux. Feed Pump No. 1 Drive Turb.	
K15		Main Steam From Steam Generators To Isolation Valves	
S2	151	Liquid Radwaste System	102019
S8		Acid Service Make-Up Water System	102016

INCL SHT 5A

35 MM NEG 11

DESIGN CONDITIONS
150 PSIG, 406°F

PIPE

All Sizes — Regular Wall, Seamless Red Brass ASTM B43.

FITTINGS

All Sizes
(a) 150 Lb., "Walseal", Silver Brazing Ends, Bronze ASTM B62.
(b) 150 Lb., Flat Face, Cast Bronze with Integral Flanges ASTM B62.
(c) 125 Lb., Threaded, Cast Bronze ASTM B62.

FLANGES

All Sizes
(a) 150 Lb., Flat Face, "Walseal", Silver Brazing Ends, Bronze ASTM B62.
(b) 150 Lb., Flat Face, Threaded, Cast Bronze ASTM B62.

BOLTS — Machine, Hex Head, Heavy Series, Carbon Steel ASTM A307 Grade B, Galvanized.

NUTS — Hex Nuts, Heavy Series, Carbon Steel ASTM A194 Grade 2H, Galvanized.

WASHERS — Standard, Flat, Steel, Galvanized.

GASKETS — 1/8" Thick, Full Face, Red Rubber.

NOTES

1. Dissimilar Metal Flange Connections Shall Have Insulating Gasket, Bolts, Sleeves and Washers for Cathodic Insulation.
2. Mating Flanges Shall Be Flat Face.

CHG.	DATE	DESCRIPTION	APPRD.	CHG.	DATE	DESCRIPTION	APPRD.
2	11-23-70	REISSUED-NO CHANGES	AGW				
1	4-20-70	ISSUED FOR BIDS-SPEC 9350	AGW	3	10-8-71	REVISED AND REISSUED	AGW

APPROVED AGW

BY S. Boghosian	MECHANICAL DESIGN STANDARD	SUPERSEDES	
DSGN. S.K.B.	DESIGN	SUPERSEDED BY	
DR. P. Kodani	PIPING SPECIFICATION "B"	SHEET NO.	SHEETS
CH. Branson	Department of Engineering	DRAWING NUMBER 047205	CHANGE 3
O.K. RHS/GAM	PACIFIC GAS AND ELECTRIC COMPANY		
DATE 8-12-68 / SCALE None	SAN FRANCISCO, CAL.		

35 M/A Rev. 3

DESIGN CONDITIONS
125 PSIG, 100°F

PIPE

3/4" & Over — Seamless Copper, Water Tube, ASTM B88, Drawn Temper, Type L.

FITTINGS

1" & Over — Wrought Copper

FLANGES

1" & Over — 125 Lb., Flat Face, Standard Weight, Silver Solder Type, Bronze ASTM B61.

BOLTS — Machine, Hex Head, Heavy Series, Carbon Steel ASTM A307 Grade B.

NUTS — Hex Nuts, Heavy Series, Carbon Steel ASTM A194 Grade 2H.

WASHERS — Standard, Flat, Steel, Cadmium Plated.

GASKETS — 1/16" Thick, Full Face, Compressed Asbestos Fiber Composition.

NOTES

1. Dissimilar Metal Flange Connections Shall Have Insulating Gasket, Bolts, Sleeves and Washers For Cathodic Insulation.
2. Mating Flanges Shall Be Flat Face.

APPROVED BY	CHG.	DATE	DESCRIPTION	GM	BY	CH.	APPD.
	4	3-7-73	REV. PIPE SIZE TO 3/4" & OVER		GJS	RCS	
	3	10-8-71	REVISED AND REISSUED			GJS	
RCW	2	11-23-70	REISSUED - NO CHANGES		RLB	VB	
	1	4-20-70	ISSUED FOR BIDS - SPEC 9350		KCL		

SUPV. BY S. Boghosian
DSGN. S.K.B.
DR. P. Kodani
CH. Branson
O.K. RHS/GM
DATE 8-12-68
SCALE None

MECHANICAL DESIGN STANDARD
DESIGN
PIPING SPECIFICATION "C"
Department of Engineering
PACIFIC GAS AND ELECTRIC COMPANY
SAN FRANCISCO, CALIFORNIA

DRAWING LIST
SUPERSEDES
SUPERSEDED BY
SHEET NO. SHEETS
DRAWING NUMBER 047207
CHANGE 4

DESIGN CONDITIONS
125 PSIG, 100°F

SINGLE TUBING:

3/4 & Under — Seamless Copper Water Tube, Annealed, ASTM B88. Type "K".

Standard Size	Nominal Wall Thickness
1/4"	0.035"
3/8"	0.049"
1/2"	0.049"
5/8"	0.049"
3/4"	0.065"

BUNDLE TUBING:

Seamless Copper Tube, Bright Annealed, ASTM B68, Type DHP

1/4" O.D. x 0.030" Wall Thickness

FITTINGS:

All Sizes — End of Run:- Brass "Imperial Hi-Seal"
Tube to Tube:- Wrought Copper Silver Soldered

No Flares Permitted.

APPROVED BY		CHG.	DATE	DESCRIPTION	GM	BY	CH.	APPD.
6-1-72	JVR	3	3-7-73	REV. FITTING SPECIFICATION		GAB		
		2	6-14-72	REV. "ACTUAL O.D." TO "STANDARD SIZE"		KCS		
6-1-72		1	6-1-72	APPROVED FOR CONSTRUCTION		KCS		

SUPV. BY K.C. Stewart
DSGN. G. Bernhoff
DR. S.J. Toy
CH.
O.K. KCS.
DATE 6-1-72 SCALE NONE

MECHANICAL DESIGN STANDARD
DESIGN
PIPING SPECIFICATION "C-1"
Department of Engineering

PACIFIC GAS AND ELECTRIC COMPANY
SAN FRANCISCO, CALIFORNIA

DRAWING LIST
SUPERSEDES
SUPERSEDED BY
SHEET NO. SHEETS
DRAWING NUMBER 047208 CHANGE 3

35 MM NEG. 3

PRINTED ON DIEPO NO. 1000H CLEARPRINT 3-71

DESIGN CONDITIONS
150 PSIG, 150°F

PIPE

3" - 24"	Cast Iron Material, Centrifugally Cast to ANSI A21.6, With Threaded On Flanges, 125lb. Drilling In Accordance With ANSI B16.1
3" - 10"	Class Of Pipe To Be Threaded Is 250
12" - 24"	Class Of Pipe To Be Threaded Is 150

FITTINGS

3" & Over	Cast Iron Material Flanged, Per ANSI A 21.10, 150lb. Pressure Class Rating Minimum 125lb. Flange Drilling Per ANSI B 16.1.
BOLTS	Machine, Hex Head, Heavy Series, Carbon Steel ASTM A307 Grade B, Galvanized.
NUTS	Hex Nuts, Heavy Series, Semi-Finished, Carbon Steel ASTM A194 Grade 2H, Galvanized.
GASKETS	1/8" Thick, Full Face, Red Rubber.

CHG.	DATE	DESCRIPTION	GM	BY	CH.	APPD.
6	3-7-73	DELETED 'FLAT RING' FROM GASKET SPECIFICATION		GB	KCS.	
5	10-8-71	REDRAWN AND REISSUED		GK	GAK	

APPROVED BY:

SUPV. BY G. KASCHUBE
DSGN. G. BERNHOFF
DR. G.A.B.
CH. GAB
O.K. G.A.K.
DATE 10-8-71 SCALE NONE

MECHANICAL DESIGN STANDARD
DESIGN
PIPING SPECIFICATION "D"
Department of Engineering
PACIFIC GAS AND ELECTRIC COMPANY
SAN FRANCISCO, CALIFORNIA

DRAWING LIST
SUPERSEDES
SUPERSEDED BY
SHEET NO. 1 of 2 SHEETS
DRAWING NUMBER 047209 CHANGE 6

35 MM/M Neg. 6

PRINTED ON RISSO NO. 1000M CLEARPRINT 3-71

NOTES:

1. This Standard is to be used for Piping Above Ground Only. For Buried Pipe a Special Design is required.

2. Mating Flanges Shall Be Flat Face.

3. Dissimilar Metal Flange Connections shall have Insulating Gasket, Bolts, Sleeves and Washers for Cathodic Insulation.

4. Bolt Holes on all Flanges shall be Back Faced or Spot Faced to Provide Proper Seats for Nuts.

62-1804 (3M 11/67)

DESIGN CONDITIONS
100 PSIG, 150°F

PIPE

All Sizes	Cast Iron Material to ASTM A377, Centrifugally Cast to USAS A21.6 or A21.8, Laying Condition "F" with 3½ feet of cover, Cast Flanges to USAS B16.1 (125 Lb.)
3" - 12"	Wall Thickness Class 22
14" - 48"	Wall Thickness Class 21

Wall Thickness for Pipe Sizes Above 48" Shall be Calculated According to USAS A21.1 - 1967.

FITTINGS

3" & Over	Cast Iron Material to ASTM A126 Class A for Sizes 12" & Under, Class B for 14" and Above. 125 Lb. Standard, Flat Face, Flanged Fittings to USAS B16.1.

MECHANICAL JOINTS. See Note 5.

All Sizes	Mechanical - Joint Fittings to USAS A21.10, Complete with Bolted Joint of Stuffing Box Type as Described in USAS A21.11 with High Strength Cast Iron Bolts & Nuts.
3" - 12"	250 PSIG Rating
14" - 48"	150 PSIG Rating

BOLTS	Machine, Hex Head, Heavy Series, Carbon Steel ASTM A307 Grade B, Galvanized.
NUTS	Hex Nuts, Heavy Series, Semi-Finished, Carbon Steel ASTM A194 Grade 2H, Galvanized.
GASKETS	1/8" Thick, Full Face, Red Rubber, Flat Ring.

VOID

CHG.	DATE	DESCRIPTION	APPRD.	CHG.	DATE	DESCRIPTION	APPRD.
2	4-20-70	ISSUED FOR BIDS - SPEC 9350		4	11-23-70	REISSUED - NO CHANGES	
1	1-5-70	REVISED NOTE #1		3	7-14-70	REVISED NOTE 1 - Sheet 2	

APPROVED

BY S. Boghosian	MECHANICAL DESIGN STANDARD DESIGN PIPING SPECIFICATION "D" Department of Engineering PACIFIC GAS AND ELECTRIC COMPANY SAN FRANCISCO, CAL.	SUPERSEDES	
DSGN. S. K. B.		SUPERSEDED BY	
DR. P. Kodani		SHEET No. 1	2 SHEETS
CH. Branson		DRAWING NUMBER	CHANGE
O.K. RHS		017200	4
DATE 9-19-68	SCALE None		

PRINTED ON DIEPO NO. 1000H CLEARPRINT 11-69

VOID

NOTES:

1. Cast Iron Wall Pipes (Spools) with Collars. Anchor Clamps Similar to Grinnell Fig. 261, Sized for O.D. of Pipe, Shall be used as Collars. (Locations where there is a possibility of Water Seepage, Screwed Flange Assemblies Shall be Used Instead of Clamps Where Specified on Piping Drawings).

2. When Bolting 150 Lb. Standard Steel Flanges to Flat Face Cast Iron Flanges, the Steel Flange Shall be Furnished with a Flat Face.

3. Dissimilar Metal Flange Connections shall have Insulating Gasket, Bolts, Sleeves and Washers for Cathodic Insulation.

4. Bolt Holes on All Flanges Shall be Back Faced or Spot Faced to Provide Proper Seats for Nuts.

5. Mechanical Joints shall be used only where specified on Piping Layout Drawings.

DESIGN CONDITIONS
150 PSIG, 75°F
93 PSIG, 100°F
45 PSIG, 130°F

PIPE

4" & Under — Schedule 80, Polyvinyl Chloride (PVC 1120), ASTM D1785.

FITTINGS

4" & Under — Schedule 80, Polyvinyl Chloride (PVC I) ASTM D2467.

FLANGES

4" & Under — Schedule 80, Flat Face, Socket-Type, Polyvinyl Chloride (PVC I) ASTM D2467, Faced and Drilled to 150 Lb. ANSI B16.5.

BOLTS

Hex Head, Heavy Series, Carbon Steel ASTM A307 Grade B, Galvanized.

NUTS

Hex Nuts, Heavy Series, Semi-Finished, Carbon Steel ASTM A194 Grade 2H, Galvanized.

GASKETS — 1/8" Thick, Full Face, Red Rubber.

NOTES

1. Solvent Cement Shall Be In Accordance With ASTM D2564 for All PVC Pipe and Fittings.
2. Mating Flanges Shall Be Flat Face.

CHG.	DATE	DESCRIPTION	APPRD.	CHG.	DATE	DESCRIPTION	APPRD.
				5	3-28-8	REVISED DESIGN CONDITIONS	
2	4-20-76	ISSUED FOR BIDS SPEC 9350		4	10-8-71	REVISED AND REISSUED	
1	3-31-70	REV. DESIGN CONDITIONS		3	11-23-70	REISSUED-NO CHANGES	

APPROVED

BY S. Boghosian
DSGN S.K.B.
DR. P. Kodani
CH. Branson
O.K. RHS/GM
DATE 8-12-68
SCALE None

MECHANICAL DESIGN STANDARD
DESIGN
PIPING SPECIFICATION "E"
Department of Engineering
PACIFIC GAS AND ELECTRIC COMPANY
SAN FRANCISCO, CAL.

SUPERSEDES
SUPERSEDED BY
SHEET NO. SHEETS
DRAWING NUMBER 047214
CHANGE 5

62-1804 (3M 11/67)

DESIGN CONDITIONS
125 PSIG, 200°F

PIPE

1" & Over — Schedule 40, Carbon Steel ASTM A53 Grade A or B, Lined with 3/16" Thick Saran.

FITTINGS
1" & Over — 125 Lb., Flat Face, Flanged, Chamfered, Cast Iron ASTM A126 Class A, Saran Lined.

FLANGES
1" & Over — 125 Lb., Flat Face, Screwed, Chamfered, Cast Iron ASTM A126 Class A.

BOLTS

Hex Head, Heavy Series, Carbon Steel ASTM A307 Grade B, Galvanized.

NUTS

Hex Nuts, Heavy Series, Semi-Finished, Carbon Steel ASTM A194 Grade 2H, Galvanized.

GASKETS

Pipe Flange to Pipe Flange: Use Hypalon (Synthetic Rubber) "Full" Gasket.
Pipe Flange to Flanged Fitting: Use Hypalon (Synthetic Rubber) "Half" Gasket.
Flanged Fitting to Flanged Fitting: Use No Gasket.

NOTES

1. No Welding is Allowed on Saran Pipe or Fittings.
2. No Bending is Allowed on Saran Pipe. Use Tapered Spacers to Accomplish Bends.
3. Pipe Furnished in 10'-0" Maximum Lengths.
4. Mating Flanges Shall Be Flat Face.
5. Spacer shall be used when Making Connection Between Saran Lined Flanged Pipe and All Other Types of Flanged Piping and Equipment.
6. Molded Raised Face Pipe Flange Joints, without Gaskets, May be used as Acceptable Substitute.

Chg.	Date	Description	Apprd.	Chg.	Date	Description	Apprd.
				5	3-7-73	DELETED 'SEAMLESS' FROM PIPE SPEC.	AGH
2	4-30-73	ISSUED FOR BIDS - SPEC 9350	AGH	4	10-8-71	REVISED AND REISSUED	AGH
1	7-15-69	ADD NOTES, FLANGES; REV. NOTE 2, PIPE, GASKET	AGH	3	11-23-70	REISSUED - NO CHANGES	AGH

APPROVED AGH

BY S. Boghosian	MECHANICAL DESIGN STANDARD	SUPERSEDES	
DSGN. S.K.B.	DESIGN	SUPERSEDED BY	
DR. P. Kodani	PIPING SPECIFICATION "F"	SHEET NO.	SHEETS
CH. Branson	Department of Engineering	DRAWING NUMBER	CHANGE
O.K. RHS/GHM	PACIFIC GAS AND ELECTRIC COMPANY	047216	5
DATE 8-12-68 / SCALE None	SAN FRANCISCO, CAL.		

35 MM Neg. 5

PRINTED ON DIEPO NO. 1000H CLEARPRINT 11-67

62-1804 (3M 11/67)

DESIGN CONDITIONS
150 PSIG, 180°F

PIPE

1-1/2" & Over	Seamless or Electric Resistance Welded Carbon Steel ASTM A53 Grade A or B, "Paralined".
1-1/2" & 2"	Schedule 40
2½" - 24"	Standard Weight

FITTINGS

1-1/2" & 2"	3000 Lb., Socket Welding-Ends, Forged Carbon Steel ASTM A105 Grade I or II, "Paralined".
2½" - 24"	Standard Weight, Butt-Welding Ends, Wrought Carbon Steel ASTM A234 Grade WPA or WPB. Paralined.

FLANGES

All Sizes	150 Lb., Slip On Flat Face, Forged Carbon Steel ASTM A181 Grade 1, "Paralined".

BOLTS

Machine, Hex Head, Heavy Series, Carbon Steel ASTM A307 Grade B, Galvanized.

NUTS

Hex Nuts, Heavy Series, Semi-Finished, Carbon Steel ASTM A194 Grade 2H, Galvanized.

GASKETS

1/8" Thick, Full Face, Red Rubber.

CHG.	DATE	DESCRIPTION	APPRD.	CHG.	DATE	DESCRIPTION	APPRD.
6	10-8-71	REVISED AND REISSUED	AGW	5	11-23-70	REISSUED - NO CHANGES	AGW
2	1-5-70	REVISED PIPE SCHEDULE	AGW	4	7-14-70	ADD PARALINE TO FITTINGS, REVSD NOTE 1	AGW
1	3-13-69	REVISED FLANGE TYPE	AGW	3	4-26-70	ISSUED FOR BIDS - SPEC 9350	AGW

APPROVED AGW

BY S. Boghosian	
DSGN. S.K.B.	
DR. P. Kodani	
CH. Branson	
O.K. RHS/GW	
DATE 8-12-68	SCALE None

MECHANICAL DESIGN STANDARD
DESIGN
PIPING SPECIFICATION "G"
Department of Engineering
PACIFIC GAS AND ELECTRIC COMPANY
SAN FRANCISCO, CAL.

SUPERSEDES
SUPERSEDED BY
SHEET No. 1 2 SHEETS
DRAWING NUMBER 047218
CHANGE 6

35 MM Neg. 6

PRINTED ON DIEPO NO. 1000H CLEARPRINT 11-67

NOTES

1. All Assemblies Including Piping, Fittings, Flanges, Etc., Shall be "Paralined" with 1/8" Thick Type RD After Shop Fabrication. Fabricator shall Insure that Maximum Lengths of Assemblies That are Capable of Being Lined are Not Exceeded. For Flanged Ends, Paraline Shall Cover The Full Face of Flanges. Bolt Holes Shall be Kept Free from Lining.
2. Interior Welds Shall be Ground Smooth. Interior Surfaces of Pipe Shall Be Free from Sharp Ridges and Scale Inclusions, Prior to Lining.
3. No Field Welding or Field Bending is Allowed on This Piping Specification.
4. Mating Flanges Shall Be Flat Face.

DESIGN CONDITIONS
100 PSIG, 125°F

PIPE

4" - 24" O.D. Standard Weight, Seamless Carbon Steel ASTM A53 GRB Pipe. "Paralined".

FITTINGS

4" - 24" O.D. Wrought Carbon Steel ASTM A234 Grade WPA or B Schedule to Match Pipe. "Paralined".

FLANGES

125lb. Light Weight Slip On, ASTM A 181 GR 11

BOLTS

Machine, Hex Head, Heavy Series, Semi-Finished, Carbon Steel ASTM A307 Grade B, Galvanized.

NUTS

Hex Nuts, Heavy Series, Semi-Finished, Carbon Steel ASTM A194 Grade 2H, Galvanized.

GASKETS

1/8" Thick; Full Face, Red Rubber.

CHG.	DATE	DESCRIPTION	GM	BY	CH.	APPD.
3	10-8-71	REDRAWN AND REISSUED				

APPROVED BY

SUPV BY G. KASCHUBE
DSGR. G. BERNHOFF
DR G.A.B.
CH. G.B.
O.K. G.A.K.
DATE 10-8-71 SCALE NONE

MECHANICAL DESIGN STANDARD
DESIGN
PIPING SPECIFICATION "G1"
Department of Engineering
PACIFIC GAS AND ELECTRIC COMPANY
SAN FRANCISCO, CALIFORNIA

DRAWING LIST
SUPERSEDES
SUPERSEDED BY
SHEET NO. 01 2 SHEETS
DRAWING NUMBER 047219
CHANGE 3

PRINTED ON DIEPO NO. 1000H CLEARPRINT 3-71

35 M:M Nov. 3

NOTES:

1. All Piping and Fittings shall be "Paralined" with 1/8" thick Type AR After Shop Fabrication. All Exterior Surfaces of Pipe and Fitting Shall be Coated with 1/16" thick Type AR. Lining and Coating Shall be Free From Voids and Blisters. Fabricator Shall Insure that Maximum Lengths of Assemblies that are Capable of Being Lined are not Exceeded.

2. Interior Welds Shall Be Ground Smooth. Interior Surfaces of Pipe Shall be Free From Sharp Ridges and Scale Inclusions, Prior to Lining.

3. Interior Lining Shall be Able to Withstand a 20,000 Volt Spark Test (Test to be Conducted Before Exterior Coating is Applied). Exterior Coating to be Tested at 1500 Volts.

4. No Field Welding or Field Bending is Allowed on This Piping Specification.

5. Mating Flanges Shall Be Flat Face.

DESIGN CONDITIONS
100 PSIG, 125°F

PIPE

2½" & Over
4½" O.D. - 36" O.D. ¼" Thick Wall, Seamless or Electric-Welded Carbon Steel API 5L Grade B Flanged Pipe. 125 Lb. Light Weight Butt-Welding Flanges to ASTM A181 Grade I. "Paralined" (See Note 1.).

42" O.D. - 48" O.D. ¼" Thick Wall, Spiral-Welded Carbon Steel ASTM A211 Flanged Pipe, Inside Seam, Flush Ground. Plate to ASTM A245 Grade C. 125 Lb. Light Weight Butt-Welding Flanges to ASTM A181 Grade I. "Paralined" (See Note 1.).

FITTINGS

2½" & Over
4½" O.D. - 48" O.D. 150 Lb., Flat Face, Flanged Fittings, Fabricated Wrought Carbon Steel ASTM A234 Grade WPB. Schedule or Wall Thickness to Match Pipe. "Paralined" (See Note 1).

BOLTS

Machine, Hex Head, Heavy Series, Semi-finished, Carbon Steel ASTM A307 Grade B, Galvanized.

NUTS

Hex Nuts, Heavy Series, Semi-Finished, Carbon Steel ASTM A194 Grade 2H, Galvanized.

GASKETS

1/8" Thick, Full Face, Red Rubber.

VOID

APPROVED BY	CHG.	DATE	DESCRIPTION	GM	BY	CH.	APPD.
	2	11-23-70	REISSUED - NO CHANGES		RLB		
	1	11-20-68	REVISED NOTES & PIPE SIZE				

SUPV. BY S. Boghosian
DSGN. S.K.B.
DR. P. Kodani
CH. BRANSON
O.K. RHS/GTA
DATE 8-26-68 SCALE None

MECHANICAL DESIGN STANDARD
DESIGN
PIPING SPECIFICATION "G1"
Department of Engineering
PACIFIC GAS AND ELECTRIC COMPANY
SAN FRANCISCO, CALIFORNIA

DRAWING LIST
SUPERSEDES
SUPERSEDED BY
SHEET NO. 1 2 SHEETS
DRAWING NUMBER CHANGE 2

NEW SHEET

DESIGN CONDITIONS
275 PSIG, 100°F

PIPE

All Sizes	Seamless or Resistance Welded Carbon Steel ASTM A53 Grade A or B, Galvanized Per ASTM A153.
2" & Under	Schedule 80, Threaded.
2½" & Over	Standard Weight, Butt-Welded.

FITTINGS

2" & Under	150 Lb., Screwed, Flat Banded, Malleable Iron ASTM A197, Threaded According to ANSI B2.1, Galvanized Per ASTM A153. 3000Lb., Threaded Half Coupling or Threaded Weld Couplet Forged Carbon Steel, ASTM A 105 GR I or II
2-1/2" & Over	Standard Weight, Butt-Welding Ends, Wrought Carbon Steel ASTM A234 Grade WPA or WPB.

FLANGES

2" & Under	150 Lb., Screwed, Malleable Iron ASTM A197, Threaded According to ANSI B2.1, Galvanized Per ASTM A153.
2½" & Over	150 Lb., Flat Face, Welding Neck or Slip-On, Faced and Drilled, Forged Carbon Steel ASTM A181 Grade I, Galvanized.

COUPLINGS

2" & Under	150 Lb., Screwed, Flat Banded, Malleable Iron ASTM A197, Threaded According to ANSI B2.1, Galvanized Per ASTM A153.

UNIONS

2" & Under	150 Lb., Screwed, Malleable Iron ASTM A197, Ground Joint, Threaded According to ANSI B2.1, Galvanized Per ASTM A153.
BOLTS	Machine, Hex Head, Heavy Series, Carbon Steel ASTM A307 Grade B, Galvanized.
NUTS	Hex Nuts, Heavy Series, Semi-Finished, Carbon Steel ASTM A194 Grade 2H, Galvanized.

CHG.	DATE	DESCRIPTION	APPRD.	CHG.	DATE	DESCRIPTION	APPRD.
3	10-8-71	REVISED AND REISSUED	NGW				
1	4-20-70	ISSUED FOR BIDS-SPEC 9350	DHP	2	11-23-70	REISSUED-NO CHANGES	NGW

APPROVED NGW

BY S. Boghosian	MECHANICAL DESIGN STANDARD DESIGN PIPING SPECIFICATION "H" Department of Engineering PACIFIC GAS AND ELECTRIC COMPANY SAN FRANCISCO, CAL.	SUPERSEDES
DSGN. S.K.B.		SUPERSEDED BY
DR. P. Kodani		SHEET No. 1 2 SHEETS
CH. Branson		DRAWING NUMBER 047221
O.K. RHS/GMM		CHANGE 3
DATE 8-12-68	SCALE None	

35 M/M No. 3

WASHERS

Standard, Flat, Steel, Galvanized

GASKETS

1/16" Thick, Full Face, Compressed Asbestos Fiber Composition.

NOTES

1. Galvanize Pipe Spools After Fabrication.

DESIGN CONDITIONS
150 PSIG, 500°F

PIPE

All Sizes	Seamless Carbon Steel ASTM A53 Grade A or B.
2" & Under	Schedule 80.
2½" & Over	Standard Weight

FITTINGS

2" & Under	3000 Lb., Socket Welding Ends, Forged Carbon Steel ASTM A105 Grade I or II.
2½" & Over	Standard Weight, Butt-Welding Ends, Wrought Carbon Steel ASTM A234 Grade WPA or WPB.

FLANGES

2" & Under	150 Lb., 1/16" Raised Face, Socket Welding Ends, Forged Carbon Steel ASTM A181 Grade I.
2½" & Over	150 Lb., 1/16" Raised Face, Welding Neck, Forged Carbon Steel ASTM A181 Grade I.

COUPLINGS

2" & Under	3000 LB. Socket Welding Ends, Forged Carbon Steel ASTM A105 Grade I or II.

BOLTS

Machine, Hex Head, Heavy Series, Carbon Steel ASTM A307 Grade B.

NUTS

Hex Nuts, Heavy Series, Semi-Finished, Carbon Steel ASTM A194 Grade 2H.

GASKETS

1/16" Thick, Ring Type, Compressed Asbestos Fiber Composition.

NOTES

1. All Pipe and Fittings Shall be Thoroughly Pickled, Neutralized, Washed and Dried After Fabrication and Coated with Water Soluble Oil. Ends of Pipe shall be Completely Sealed Prior to Shipment.

CHG.	DATE	DESCRIPTION	APPRD.	CHG.	DATE	DESCRIPTION	APPRD.
2	11-23-70	REISSUED - NO CHANGES	RGW				
1	4-20-70	ISSUED FOR BIDS - SPEC 9350	DLP	3	10-8-70	REVISED AND REISSUED	RGW

APPROVED RGW

BY S. Boghosian	MECHANICAL DESIGN STANDARD	SUPERSEDES	
DSGN S. K. B.	DESIGN	SUPERSEDED BY	
DR. P. Kodani	PIPING SPECIFICATION "J"	SHEET NO.	SHEETS
CH. Branson	Department of Engineering	DRAWING NUMBER	CHANGE
O.K. RHS/GM	PACIFIC GAS AND ELECTRIC COMPANY	047224	3
DATE 8-12-68 / SCALE None	SAN FRANCISCO, CAL.		

DESIGN CONDITIONS
150 PSIG, 500°F

PIPE

2" & Under	Schedule 80, Seamless Carbon Steel ASTM A53 or A106 Grade B Only.
2-1/2" - 24"	Standard Weight, Seamless Carbon Steel ASTM A53 Grade B Only.
26" - 36"	3/8" Nominal Wall Thickness, Electric-Fusion Welded Carbon Steel Pipe ASTM A134, Plate Conforming to ASTM A285 Grade C, Firebox Quality, or A155 Grade KCF 65 Cl.II.

FITTINGS

2" & Under	3000 Lb. Socket Welding Ends, Forged Carbon Steel ASTM A105
2-1/2" & Over	Butt-Welding Ends, Wrought Carbon Steel ASTM A234 Grade WPB. Schedule or Wall Thickness to Match Pipe. 2-1/2" - 24" Seamless, 26" - 36" Welded.

FLANGES

2" & Under	150 Lb., 1/16" Raised Face, Socket Welding Ends; Forged Carbon Steel ASTM A 181 Grade I or II.
2-1/2" & Over	150 Lb. 1/16" Raised Face, Welding Neck, Forged Carbon Steel ASTM A 181 Grade I or II.

BOLTS

Machine, Hex Head, Heavy Series, Semi-Finished, Carbon Steel ASTM A 307 Grade B.

NUTS

Hex Nuts, Heavy Series, Semi-Finished, Carbon Steel ASTM A 194 Grade 2H.

GASKETS

1/16", Flat Ring Type, Compressed Asbestos Fiber Composition, Group I.

CHG.	DATE	DESCRIPTION	APPRD.	CHG.	DATE	DESCRIPTION	APPRD.
7	10-8-71	REDRAWN AND REISSUED	GEH	8	3-7-73	REV. PIPE 26"-36", ADD. NOTE 2 SHEET 2	GEH

APPROVED GEH

BY G. KASCHUBE	MECHANICAL DESIGN STANDARD DESIGN PIPING SPECIFICATION "K" Department of Engineering PACIFIC GAS AND ELECTRIC COMPANY SAN FRANCISCO, CAL.	SUPERSEDES	
DSGN. G. BERNHOFF		SUPERSEDED BY	
DR. G.A.B.		SHEET No. 1 of 2	SHEETS
CH. GEB.		DRAWING NUMBER 047225	CHANGE 8
O.K. G.A.K.			
DATE 10-8-71 / SCALE NONE			

35 mm Neg. 8

6059r

NOTES:

1. Seamless Carbon Steel ASTM A 106 GR.B Pipe is Acceptable as an Alternate to Welded Pipe in 26"-36" Sizes With PG&E Approval.

2. Slip-on Flanges are Acceptable with Engineers Approval

35 M/M N

62-1504 (SM 11/67)

DESIGN CONDITIONS
405 PSIG, 650°F

PIPE

All Sizes	Seamless Carbon Steel ASTM A106 Grade B.
2" & Under	Schedule 80
2½" - 20"	Standard Weight
24"	Extra Strong

FITTINGS

2" & Under	3000 Lb., Socket Welding Ends, Forged Carbon Steel ASTM A105
2½"-20"	Standard Weight, Butt-Welding Ends, Seamless Carbon Steel ASTM A234 Grade WPB,
24"	Extra Strong, Butt-Welding Ends, Seamless Carbon Steel ASTM A234 Grade WPB.

FLANGES

2" & Under	300 Lb., 1/16" Raised Face, Socket Welding Ends, Ends, Forged Carbon Steel ASTM A181 Grade I or II.
2½" & Over	300 Lb., 1/16" Raised Face, Welding Neck, Forged Carbon Steel ASTM A181 Grade I or II.

BOLTS

Bolt-Stud, Heavy Series, Semi-Finished, Alloy Steel ASTM A193 Grade B7.

NUTS

Hex Nuts, Heavy Series, Semi-Finished, Carbon Steel ASTM A194 Grade 2H.

GASKETS

0.175" Thick, Flexitallic, Style CG.

CHG.	DATE	DESCRIPTION	APPRD.	CHG.	DATE	DESCRIPTION	APPRD.
3	10-8-71	REVISED AND REISSUED	abw	4	5-7-73	REV. FITTING SPECIFICATION. ADD. 24"	abw
1	1-5-70	REVISED 24" PIPE SCHEDULE	abw	2	4-23-70	REISSUED - NO CHANGES	abw

APPROVED abw

BY S. Boghosian	MECHANICAL DESIGN STANDARD	SUPERSEDES
DSGN. S.K.B.	DESIGN	SUPERSEDED BY
DR. P. Kodani	PIPING SPECIFICATION "K2"	SHEET NO. / SHEETS
CH. Branson	Department of Engineering	DRAWING NUMBER 047227 / CHANGE 4
O.K. RHS/GM	PACIFIC GAS AND ELECTRIC COMPANY	
DATE 8-12-68 / SCALE None	SAN FRANCISCO, CAL.	

PRINTED ON DIEPO NO. 1000H CLEARPRINT 11-67

DESIGN CONDITIONS
1030 PSIG, 650°F

PIPE

2" & Under	Schedule 80, Seamless Carbon Steel ASTM A106 Grade B.
2½" - 3"	Schedule 40
3½"	Extra Strong
4" - 6"	Schedule 40
8" - 24"	Schedule 60

FITTINGS

2" & Under	3000 Lb., Socket Welding Ends, Forged Carbon Steel ASTM A105 Grade II.
2½" & Over	Butt-Welding Ends, Seamless Carbon Steel ASTM A234 Grade WPB, Schedule or Wall Thickness to Match Pipe.

FLANGES

2" & Under	600 Lb., ¼" Raised Face, Socket Welding Ends, Forged Carbon Steel ASTM A105 Grade II.
2½" & Over	600 Lb., ¼" Raised Face, Welding Neck, Forged Carbon Steel ASTM A105 Grade II.

BOLTS

Bolt-Stud, Heavy Series, Semi-Finished, Alloy Steel ASTM A193 Grade B7.

NUTS

Hex Nuts, Heavy Series, Semi-Finished, Carbon Steel ASTM A194 Grade 2H.

GASKETS

0.175" Thick, Flexitallic, Style CG.

35 Mil Mod. 5

CHG.	DATE	DESCRIPTION	GM	BY	CH.	APPD.
5	10-8-71	REVISED AND REISSUED		GK	GLB	UGW
4	11-23-70	REISSUED-NO CHANGES		RLB		
3	4-20-70	ISSUED FOR BIDS-S.O.C 9350		KCB	KCB.	
2	1-5-70	REVISED & RETYPED				UGW
1	3-13-69	REVISED PIPE SCHEDULE				

APPROVED BY

SUPV. BY S. Boghosian
DSGN. S.K.B.
DR. P. Kodani
CH. Branson
O.K. RTS
DATE 8-14-68
SCALE None

MECHANICAL DESIGN STANDARD
DESIGN
PIPING SPECIFICATION "K6"
Department of Engineering
PACIFIC GAS AND ELECTRIC COMPANY
SAN FRANCISCO, CALIFORNIA

DRAWING LIST
SUPERSEDES
SUPERSEDED BY
SHEET NO. SHEETS
DRAWING NUMBER 047231
CHANGE 5

62-1804 (3M 11/67)

DESIGN CONDITIONS
600 PSIG, 400°F

PIPE

2" & Under	Schedule 80, Seamless Carbon Steel ASTM A106 Grade B.
2½" - 14"	Standard Weight, Seamless Carbon Steel ASTM A106 Grade B.
16" - 20"	Extra Strong, Seamless Carbon Steel ASTM A106 Grade B.
24"	Schedule 40, Seamless Carbon Steel ASTM A106 Grade B.
30" O.D.	0.671" Minimum Wall Thickness, Electric-Fusion Welded Carbon Steel ASTM A155 Grade KCF65, Class II.

FITTINGS

2" & Under	3000 Lb. Socket Welding Ends, Forged Carbon Steel ASTM A105.
2½" & Over	Butt-Welding Ends, Wrought Carbon Steel ASTM A234 Grade WPB. Schedule or Wall Thickness to Match Pipe.

FLANGES

2" & UNDER	300 Lb., 1/16" Raised Face, Socket Welding Ends, Forged Carbon Steel ASTM A181 Grade I or II.
2½" & Over	300 Lb., 1/16" Raised Face, Welding Neck, Forged Carbon Steel ASTM A181 Grade I or II.
5 30"	Applicable Only To Consensate Polishing Sys Piping (DIABLO CANYON). Class 300 Raised Face, Welding Neck, Forged Carbon Steel ASTM A105, Bore To Match 30" Pipe, Design & Dimensions Shall Be Per MSS SP-44.

BOLTS

Machine, Hex Head, Heavy Series, Semi-Finished, Carbon Steel ASTM A307 Grade B.

5 Applicable Only To Condensate Polishing Sys. Piping (DIABLO CANYON). Continuous Thread Stud Bolts, Alloy Steel Per ASTM A193, Grade B7, Coarse Thread Series Per ANSI B1.1, Class 2A Fit For Sizes 1" Diameter And Smaller. 8-Thread Series Class 2A Fit For Larger Sizes, Dimensions Per ANSI B16.5.

NUTS

Hex Nuts, Heavy Series, Semi-Finished, Carbon Steel ASTM A194 Grade 2H.

GASKETS

1/16" Thick, Flat Ring Type, Compressed Asbestos Fiber Composition.

CHG.	DATE	DESCRIPTION	APPRD.	CHG.	DATE	DESCRIPTION	APPRD.
5	5-6-80	ADDED: 30" FLANGE & STUD BOLT SPECS FOR CNDS POLISHING SYS PIPING PER DCO-EM-414					
2	11-23-70	REISSUED-NO CHANGES		4	3-7-73	REV. 30" PIPE SPECIFICATION	
1	1-5-70	REV. PIPE SCH. ADD. 2" & UNDER FLANGES		3	10-8-71	REVISED AND REISSUED	

APPROVED

BY S. Boghosian	
DSGN. S.K.B.	
DR. P. Kodani	
CH. Brenson	
O.K. RHS/RM	
DATE 8-14-68	SCALE None

MECHANICAL DESIGN STANDARD
DESIGN
PIPING SPECIFICATION "K12"
Department of Engineering
PACIFIC GAS AND ELECTRIC COMPANY
SAN FRANCISCO, CAL.

SUPERSEDES
SUPERSEDED BY
SHEET No. 1 OF 1 SHEETS

DRAWING NUMBER 047237 CHANGE 5

RM INDEXED REV. 5

35 M/M 1/68

PRINTED ON DIEPO NO. 1000H CLEARPRINT 11-67

62-1804 (3000 1-68)

DESIGN CONDITIONS
600 PSIG, 650°F

PIPE

2" & Under	Schedule 80, Seamless Carbon Steel ASTM A106 Grade B.
2½" - 12"	Standard Weight, Seamless Carbon Steel ASTM A106 Grade B.

FITTINGS

2" & Under	3000 Lb., Socket Welding Ends, Forged Carbon Steel ASTM A105 Grade II.
2½" & Over	Butt-Welding Ends, Wrought Carbon Steel ASTM A234 Grade WPB, Schedule or Wall Thickness to Match Pipe.

FLANGES

2" & Under	600 Lb., ¼" Raised Face, Socket Welding Ends, Forged Carbon Steel ASTM A105 Grade I or II.
2½" & Over	600 Lb., ¼" Raised Face, Welding Neck, Forged Carbon Steel ASTM A105 Grade I or II.

BOLTS

Bolt-Stud, Heavy Series, Semi-Finished, Alloy Steel ASTM A193 Grade B7.

NUTS

Hex Nuts, Heavy Series, Semi-Finished, Carbon Steel ASTM A194 Grade 2H.

GASKETS

0.175" Thick, Flexitallic, Style CG.

35 MIN 11

APPROVED BY	CHG.	DATE	DESCRIPTION	GM	BY	CH.	APPD.
	3	10-8-71	REVISED AND REISSUED		GK	GLB	
	2	11-23-70	REISSUED-NO CHANGES		RLB		
	1	1-5-70	ADDED 2" & UNDER FLANGES				

SUPV. BY S. Boghosian
DSGN. S.K.B.
DR. P. Kodani
CH. R.L. BRYSON
O.K. RHS
DATE 7-10-69
SCALE None

MECHANICAL DESIGN STANDARD
DESIGN
PIPING SPECIFICATION "K13"
Department of Engineering
PACIFIC GAS AND ELECTRIC COMPANY
SAN FRANCISCO, CALIFORNIA

DRAWING LIST
SUPERSEDES
SUPERSEDED BY
SHEET NO. SHEETS
DRAWING NUMBER 047238
CHANGE 3

PRINTED ON DIEPO NO. 1000H CLEARPRINT 4-68

DESIGN CONDITIONS
1085 PSIG., 600F

PIPE

2" & Under	Schedule 80, Seamless Carbon Steel ASTM A106 Grade B
2½", 3", 4", 6"	Standard Weight Seamless Carbon Steel ASTM A106 Grade B
3½"	Extra Strong, Seamless Carbon Steel ASTM A106 Grade B
8 - 24"	Schedule 60, Seamless Carbon Steel ASTM A106 Grade B, with Supplementary Requirements S1 - S6.
26" & Larger	Electric-Fusion-Welded Carbon Steel ASTM A155 Grade KCF70 Class 1 with Supplementary Requirements S1 - S4.

26" O.D. 0.851" Min. Wall Thickness
26" I.D. 0.9063" Min. Wall Thickness

30" O.D. 0.972" Min. Wall Thickness

FITTINGS

2" & Under	3000 Lb., Socket Welding Ends, Forged Carbon Steel ASTM A105
2½" - 24"	Butt-Welding Ends, Seamless Carbon Steel ASTM A234 Grade WPB, Schedule to Match Pipe, Long Radius.
26" & Larger	Butt-Welding Ends, Wrought Carbon Steel ASTM A234 Grade WPB With Supplementary Requirements S1 & S2, Wall Thickness to Match or Exceed Minimum Wall Thickness of Pipe. Plate Material ASTM A 515 Grade 70 Seam Welds Fully Radio-Graphed Per ASME Boiler Code Section I.

FLANGES

2" & Under	600 Lb., ¼" Raised Face, Socket Welding Ends, Forged Carbon Steel ASTM A105
2½" & Over	600 Lb., ¼" Raised Face, Welding Neck, Forged Carbon Steel ASTM A105 . Bore to Match Pipe Wall Thickness.

CHG.	DATE	DESCRIPTION	GM	BY	CH.	APPD.
5	3-7-73	REV. FITTINGS 2½"-24" TO SEAMLESS		GLB	KCB.	AGW
4	10-8-71	REVISED AND REISSUED		GR	GLB.	AGW
5	11-23-70	REISSUED-NO CHANGES		RLB		AGW
2	1-5-70	REVISED & RETYPED		LKB		AGW
1	8-28-69	REV. 26" & LARGER PIPE MATERIAL GRADE		LKB	LKB	AGW

APPROVED BY AGW

SUPV. BY S. Boghosian
DSGN. S.K.B.
DR. P. Kodani
CH. LKB
O.K. RHS
DATE 8-13-69
SCALE None

MECHANICAL DESIGN STANDARD
DESIGN
PIPING SPECIFICATION "K14"
Department of Engineering
PACIFIC GAS AND ELECTRIC COMPANY
SAN FRANCISCO, CALIFORNIA

DRAWING LIST
SUPERSEDES
SUPERSEDED BY
SHEET NO. 1 2 SHEETS
DRAWING NUMBER 047239
CHANGE 5

BOLTS	Bolt-Stud, Heavy Series, Semi-Finished, Alloy Steel ASTM A193 Grade B7.
NUTS	Hex Nuts, Heavy Series, Semi-Finished, Carbon Steel ASTM A194 Grade 2H.
GASKETS	0.175" Thick, Flexitallic, Style CG.

62-1504 (3000 8/68)

DESIGN CONDITIONS
1085 PSIG., 600°F

PIPE

2" & Under	Schedule 80, Seamless Carbon Steel ASTM A106 Grade B
2½", 3", 4", 6"	Standard Weight, Seamless Carbon Steel ASTM A106 Grade B
3½"	Extra Strong, Seamless Carbon Steel ASTM A106 Grade B
8 - 24"	Schedule 60, Seamless Carbon Steel ASTM A106 Grade B with Supplementary Requirements S1 - S6.
26" I.D.	1.002" Minimum Wall Thickness, Electric-Fusion-Welded Carbon Steel SA516 Grade 70 Plate, Fully Radiographed Seam Welds

FITTINGS

2" & Under	3000 Lb., Socket Welding Ends, Forged Carbon Steel ASTM A105 Grade II.
2½" - 24"	Butt-Welding Ends, Seamless Carbon Steel, Material and Schedule to Match Pipe.
26" I.D.	Butt-Welding Ends, Made from SA516 Grade 70 to ASTM A234 Requirements with Supplementary Requirements S1 & S2, Wall Thickness to Match or Exceed Minimum Wall Thickness of Pipe, Fully Radiographed Seam Welds

FLANGES

2" & Under	600 Lb., ¼" Raised Face, Socket Welding Ends, Forged Carbon Steel ASTM A105 Grade II.
2½" & Over	600 Lb., ¼" Raised Face, Welding Neck, Forged Carbon Steel ASTM A105 Grade II. Bore to Match Pipe Wall Thickness.

35 M/M Ucg. 1-1

CHG.	DATE	DESCRIPTION	GM	BY	CH.	APPD.
5	11-23-70	REISSUED - NO CHANGES		RLO	DJL	AGW
4	1-5-70	REVISED & RETYPED		JKB		AGW
3	8-28-69	REV. 26" I.D. PIPE WALL THICKNESS		JKB		AGW
2	6-3-69	REV. PIPE & FITTINGS ; ADDED NOTE		JKB		AGW
6	10-8-71	REVISED AND REISSUED		GK		AGW

APPROVED BY: AGW

SUPV. S. Boghosian
DSGN. S.K.B.
DR. P. Kodani
CH. Branson
O.K. RHS/GHM
DATE 9-19-68
SCALE None

MECHANICAL DESIGN STANDARD
DESIGN
PIPING SPECIFICATION "K15"
Department of Engineering
PACIFIC GAS AND ELECTRIC COMPANY
SAN FRANCISCO, CALIFORNIA

DRAWING LIST
SUPERSEDES
SUPERSEDED BY
SHEET NO. 1 2 SHEETS
DRAWING NUMBER 047240
CHANGE 6

PRINTED ON DIEPO NO. 1000H CLEARPRINT 3-69

BOLTS	Bolt-Stud, Heavy Series, Semi-Finished, Alloy Steel ASTM A193 Grade B7.
NUTS	Hex Nuts, Heavy Series, Semi-Finished, Carbon Steel ASTM A194 Grade 2H.
GASKETS	0.175" Thick, Flexitallic, Style CG. [illegible]

NOTE:

1. Main Steam from Steam Generator to Isolation Valves - See [illegible] for Additional Details of Welding, [illegible], NDE, etc.

62-1804 (3000 8/68)

DESIGN CONDITIONS
1415 PSIG, 450°F

PIPE

2" & Under	Schedule 80, Seamless Carbon Steel ASTM A106 Grade B
2½" - 18"	Schedule 80, Seamless Carbon Steel ASTM A106 Grade B, with Supplementary Requirements S1-S6 for Pipe 8" & larger.
24"	Schedule 100, Seamless Carbon Steel ASTM A106 Grade B with Supplementary Requirements S1 - S6.
30" O.D.	1.240" Minimum Wall Thickness, Electric-Fusion Welded Carbon Steel ASTM A155 Class 1, Grade KCF 70 Plate with Supplementary Requirements S1 - S4.

FITTINGS

2" & Under	3000 Lb. Socket Welding Ends, Forged Carbon Steel ASTM A105
2½" - 18"	Schedule 80, Butt-Welding Ends, Wrought Carbon Steel ASTM A234 Grade WPB with Supplementary Requirements S1 & S2 Except that Plate Material Shall Be ASTM A516 Grade 70.
24"	Schedule 100, Butt-Welding Ends, Wrought Carbon Steel ASTM A234 Grade WPB with Supplementary Requirements S1 & S2 Except that Plate Material Shall be ASTM A516 Grade 70.
30"	Wall Thickness to Match or Exceed Minimum Wall Thickness of Pipe, Butt-Welding Ends, Wrought Carbon Steel ASTM A234 Grade WPB with Supplementary Requirements S1 & S2 Except that Plate Material Shall be ASTM A516 Grade 70.

FLANGES

2" & Under	1500 Lb., ¼" Raised Face, Socket Welding Ends, Forged Carbon Steel ASTM A105
2½" & Over	900 Lb., ¼" Raised Face, Welding Neck, Forged Carbon Steel ASTM A105

APPROVED BY		CHG.	DATE	DESCRIPTION	GM	BY	CH.	APPD.
		3	10-8-71	REVISED AND REISSUED		GK	GOS	AGW
	AGW	2	11-23-70	REISSUED-NO CHANGES		RLB	DJB	AGW
		1	1-5-70	REVISED & RETYPED		JKH		AGW

SUPV. BY S. Boghosian	MECHANICAL DESIGN STANDARD	DRAWING LIST	
DSGN. S.K.B.	DESIGN	SUPERSEDES	
DR. P. Kodani	PIPING SPECIFICATION "K16"	SUPERSEDED BY	
CH. Branson	Department of Engineering	SHEET NO. 2	SHEETS
O.K. RHS/GTD	PACIFIC GAS AND ELECTRIC COMPANY	DRAWING NUMBER	CHANGE
DATE 9-19-68 / SCALE None	SAN FRANCISCO, CALIFORNIA	047241	3

PRINTED ON DIEPO NO. 1000H CLEARPRINT 8-69

BOLTS	Bolt-Stud, Heavy Series, Semi-Finished, Alloy Steel ASTM A193 Grade B7.
NUTS	Hex Nuts, Heavy Series, Semi-Finished, Carbon Steel ASTM A194 Grade 2H.
GASKETS	0.175" Thick, Flexitallic, Style CG.

NOTE:

1. Feedwater from Steam Generators to Isolation Valves [illegible] Boiler Code Section I.

2. Refer to F. P. & E. Spec. [illegible] for details of Weld [illegible] Feedwater System.

62-1804 (2500 8-67)

DESIGN CONDITIONS
2500 PSIG, 650°F

PIPE

⅛" - 12"	Schedule 160, Seamless Carbon Steel ASTM A106 Grade B. with Supplementary Requirements S1 - S6. For Pipe 8" & Larger.

FITTINGS

2" & Under	6000 Lb. Socket Welding Ends, Forged Carbon Steel ASTM A105 Grade II.
2½" - 12"	Schedule 160, Butt-Welding Ends, Wrought Carbon Steel ASTM A234 Grade WPB. with Supplementary Requirements S1 & S2.

FLANGES

2" & Under	1500 Lb., ¼" Raised Face, Socket Welding Ends, Forged Carbon Steel ASTM A105 Grade II, Bore to Match Schedule 160 Pipe.
2½" - 12"	1500 Lb., ¼" Raised Face, Welding Neck, Forged Carbon Steel ASTM A105 Grade II, Bore to Match Schedule 160 Pipe.

BOLTS	Bolt-Stud, Heavy Series, Semi-Finished, Alloy Steel ASTM A193 Grade B7.
NUTS	Hex Nuts, Heavy Series, Semi-Finished, Carbon Steel ASTM A194 Grade 2H.
GASKETS	0.175" Thick, Flexitallic, Style CG.

APPROVED BY	CHG.	DATE	DESCRIPTION	GM	BY	CH.	APPD.
	3	10-8-71	REVISED AND REISSUED		GR	GS	GKP
	2	11-23-70	REISSUED - NO CHANGES		RLB	Bell	AOW
	1	1-5-70	REV. PIPE SIZE & ADDED SUPPLEMENTARY REQT.		SKB		AOW

SUPV. BY S. Boghosian
DSGN. S.K.B.
DR. P. Kodani
CH. Branson
O.K. RHS
DATE 8-14-68
SCALE None

MECHANICAL DESIGN STANDARD
DESIGN
PIPING SPECIFICATION "K17"
Department of Engineering
PACIFIC GAS AND ELECTRIC COMPANY
SAN FRANCISCO, CALIFORNIA

DRAWING LIST
SUPERSEDES
SUPERSEDED BY
SHEET NO. SHEETS
DRAWING NUMBER 047242 CHANGE 3

35 MIL NO. 1 3

PRINTED ON DIEPO NO. 1000H CLEARPRINT 8-67

DESIGN CONDITIONS
2500 PSIG, 650°F

PIPE

1" & Under — Seamless Stainless Steel Tubing ASTM A213 Grade TP 316.

Actual O.D.	Wall Thickness
1/4"	0.065"
3/8"	0.065"
1/2"	0.065"
3/4"	0.095"
1"	0.188"

FITTINGS

All Sizes

Imperial "Braze-Seal" tubing fittings
ASTM A182 Gr F316 (SEE NOTE BELOW) OR
A479 Type F316

Imperial "Hi-Seal" tubing fittings
ASTM A182 Gr F316 with (SEE NOTE BELOW)
ASTM A564 Type 630 sleeves (17-4 PH)

Swagelok tubing fittings ASTM A269 Type 316 ⚠

Socket Weld fittings
ASTM A403 Gr WP316

No Flares Permitted

NOTE: ASTM A 403 GR WP316 MAY BE SUBSTITUTED FOR ASTM A182 GRF316 MATERIAL FOR FITTINGS

CHG.	DATE	DESCRIPTION		BY	CHK.
7	10-29-73	DELETED NOTES 1 & 2 & ADDED TO 049021		RY	MUG
6	9-25-73	ADDED (IMPERIAL HI-SEAL) TO FITTINGS & NOTES 1 & 2		RY	MUG
5	3-29-73	REVISED FITTING SPECIFICATION		GAB	KCL
11	2-28-80	ADDED NOTE ABOVE PER DCO-E-M-475		RJB	MUG
10	2-1-79	ADDED "BRAZE-SEAL SPEC'S		RY	MUG
9	9-30-74	ADDED NOTE ABOVE PERECO MC76		LDT	RY
8	9-6-74	CHANGED PIPE SIZE AND FITTINGS INFORMATION		JGS	RY

APPROVED BY

SUPV. BY S. Boghosian
DSGN. S.K.B.
DR. P. Kodani
CH. Granson
O.K. RHS/GAB
DATE 8-14-68
SCALE None

MECHANICAL DESIGN STANDARD
DESIGN
PIPING SPECIFICATION "S"
Department of Engineering
PACIFIC GAS AND ELECTRIC COMPANY
SAN FRANCISCO, CALIFORNIA

DRAWING LIST
SUPERSEDES
SUPERSEDED BY
SHEET NO. 1 of 1
DRAWING NUMBER 047282
SHEET NUMBER 11

68-1904 (2500 8-67)

DESIGN CONDITIONS
700 PSIG, 400°F

PIPE

2" & Under — Schedule 40S, Seamless Stainless Steel ASTM A312 Grade TP 304.

2½" - 8" — Schedule 40S, Seamless Stainless Steel ASTM A312 Grade TP 304 with Supplementary Requirement S1.

10" - 12" — Schedule 40S, ~~Seamless Stainless Steel~~ ASTM A376 Grade TP 304 with Supplementary Requirement S1 or Electric Fusion Welded ASTM A358 Grade 304 with Supplementary Requirements S1 & S2.

14" — Schedule 40, Seamless Stainless Steel (Same as Above)

FITTINGS

2" & Under — 3000 Lb. Socket Welding Ends, Forged Stainless Steel ASTM A182 Grade F304.

2½" - 14" — Schedule to Match Pipe, Butt-Welding Ends, Stainless Steel ASTM A403 Grade WP 304 with Supplementary Requirements S1 & S2.

FLANGES

2" & Under — 600 Lb., ¼" Raised Face, Socket Welding Ends, Forged Stainless Steel ASTM A182 Grade F304.

2-1/2" & Over — 600 Lb., ¼" Raised Face, Welding Neck, Forged Stainless Steel ASTM A182 Grade F304. Bore to Match Pipe Wall Thickness.

CHG.	DATE	DESCRIPTION	GM	BY	CH.	APPD.
7	3-7-73	REV. BOLT SPEC.	GAD	KCS.	[illegible]
6	10-8-71	REVISED AND REISSUED	GK	GLE.	[illegible]
5	11-23-70	REISSUED - NO CHANGES	RLG	[illegible]	[illegible]
4	1-5-70	REV. PIPE & FITTINGS WALL THICKNESS, DELETED NOTE	JKTS		[illegible]
3	10-24-69	REV. BOLTS & NUTS MATL SH. 2	SPC.	[illegible]	[illegible]
2	8-28-69	ADDED NOTES 1 & 2; REV. PIPE WALL THICKNESS	JKTS	JKTS	[illegible]
1	10-30-68	REVISED DES. COND. & MATL. FOR 12"-14" PIPE & FITTINGS	JKTS	JKTS	[illegible]

APPROVED BY

SUPV. S. Boghosian
DSGN. S.K.B.
DR. P. Kodani
CH. Branson
O.K. RHS/BM
DATE 8-14-68
SCALE None

MECHANICAL DESIGN STANDARD
DESIGN
PIPING SPECIFICATION "S1"
Department of Engineering
PACIFIC GAS AND ELECTRIC COMPANY
SAN FRANCISCO, CALIFORNIA

DRAWING LIST
SUPERSEDES
SUPERSEDED BY
SHEET NO. 1 2 SHEETS
DRAWING NUMBER 047283
CHANGE 7

35 M/M Reg. 7

BOLTS	Bolt-Stud, Stainless Steel, ASTM A193 Grade B8.
NUTS	Hex Nuts, Heavy Series, Semi-Finished, Stainless Steel ASTM A194 Grade 8.
GASKETS	0.175" Thick, Flexitallic, Style CG.

NOTES:

62-1804 (2500 8-67)

DESIGN CONDITIONS
150 PSIG, 500°F
255 PSIG, 150°F

PIPE

2" & Under	Schedule 40S, Seamless Stainless Steel ASTM A312 Grade TP 304.
2½" -6"	Schedule 10S, Seamless Stainless Steel ASTM A312 Grade TP 304.
8" -	Schedule 10S, Welded Stainless Steel ASTM A358 Grade TP 304.
10"-24"	¼" Nominal Wall Thickness, Welded Stainless Steel ASTM-A358 Grade TP 304

FITTINGS

2" & Under	3000 Lb. Socket Welding Ends, Forged Stainless Steel ASTM A182 Grade F304, Bored to Match Schedule 40S. Pipe.
2½" - 8"	Schedule 10S, Butt-Welding Ends, Seamless Stainless Steel ASTM A403 Grade WP304.
10" - 24"	1/4" Wall Thickness, Butt-Welding Ends, Welded Stainless Steel ASTM A403 Grade WP 304.

FLANGES

2" & Under	150 Lb. 1/16" Raised Face, Socket Welding Ends, Forged Stainless Steel ASTM A182 Grade F304, Bored to Match Schedule 40S. Pipe.
2½" & Over	150 Lb., 1/16" Raised Face, Welding Neck, Forged Stainless Steel ASTM A182 Grade F304, Bored to Match Pipe Wall Thickness.

CHG.	DATE	DESCRIPTION	GM	BY	CH.	APPD.
6	3-7-73	REV. DESIGN COND. TO 255 PSIG AT 150°F, REV. PIPE SPEC.		GLB	KCS	UGW
5	10-8-71	REVISED AND REISSUED		GK	GLB	UGW
4	11-23-70	REISSUED - NO CHANGES		RLB	RLB	UGW
3	1-5-70	ADDED "NOMINAL" TO 14"-24" PIPE WALL THICKNESS		AKB		UGW
2	10-24-69	REV. BOLTS & NUTS MATL. SH. 2		SPM	SPM	UGW
1	8-28-69	REV. PIPE ASTM SPEC. & SCHEDULE, REV. NOTE 2		AKB	AKB	UGW

APPROVED BY UGW

SUPV. BY S. Boghosian
DSGN. S.K.B.
DR. P. Kodani
CH. Branson
O.K. RHS/
DATE 8-14-68
SCALE None

MECHANICAL DESIGN STANDARD
DESIGN
PIPING SPECIFICATION "S2"
Department of Engineering
PACIFIC GAS AND ELECTRIC COMPANY
SAN FRANCISCO, CALIFORNIA

DRAWING LIST
SUPERSEDES
SUPERSEDED BY
SHEET NO. 1 of 2 SHEETS
DRAWING NUMBER 047284
CHANGE 6

35 MM Neg

PRINTED ON DIEPO NO. 1000H CLEARPRINT 8-67

BOLTS	Machine, Hex Head, Stainless Steel ASTM A193 Grade B8.
NUTS	Hex Nuts, Heavy Series, Semi-Finished, Stainless Steel ASTM A194 Grade 8.
GASKETS	0.175" Thick, Flexitallic, Style CG.

NOTES:

1. No Threading is Allowed for Material in This Spec.
2. Additional Supplementary Testing Required on Pipe and Fittings as Required by ANS B31.7 Class Applicable to a Particular System Must Be Performed.
3. No Bending is Allowed for This Spec.

DESIGN CONDITIONS
370 PSIG, 650°F
495 PSIG, 300°F
550 PSIG, 200°F

PIPE

2" & Under — Schedule 40S, Seamless Stainless Steel ASTM A312 Grade TP 304.

2½" - 12" — Schedule 40S, Seamless Stainless Steel ASTM A312 Grade TP 304 with Supplementary Requirement S1 or Welded Stainless Steel ASTM A358 Grade 304 with Supplementary Requirement S1 & S2.

FITTINGS

2" & Under — 3000 Lb. Socket Welding Ends, Forged Stainless Steel ASTM A182 Grade F304.

2½" & Over — Schedule 40S, Butt-Welding Ends, Seamless or Welded Stainless Steel ASTM A403 Grade WP 304 with Supplementary Requirements S1 & S2.

FLANGES

2" & Under — 300 Lb., 1/16" Raised Face, Socket Welding Ends, Forged Stainless Steel ASTM A182 Grade F304.

2½" - 12" — 300 Lb., 1/16" Raised Face, Welding Neck, Forged Stainless Steel ASTM A182 Grade F304.

BOLTS

Hex HeadBolts, Heavy Series Semi-Finished, Stainless Steel ASTM A193 Grade B8.

NUTS

Hex Nuts, Heavy Series, Semi-Finished, Stainless Steel ASTM A194 Grade 8..

GASKETS

0.175" Thick, Flexitallic, Style CG.

CHG.	DATE	DESCRIPTION	GM	BY	CH.	APPD.
7	3-7-73	REVISED BOLT SPEC.		GAD	KCS	
6	10-8-71	REVISED AND REISSUED		GK	GAD	
5	11-23-70	REISSUED - NO CHANGES		RLB		
4	1-6-70	REV. PIPE MATERIAL DESCRIPTION		JKB		
3	10-28-69	REV. BOLTS & NUTS MATL.				
2	8-28-69	ADDED PIPE INFO; REV. FLG MATL GRADE		JKB	JKB	
1	4-23-69	ADDED DESIGN CONDITION & REV. FLANGE MATL.		JKB	JKB	

APPROVED BY

SUPV. BY S. Boghosian
DSGN. S K B
DR. P. Kodani
CH. Branson
O.K. RHS/GAD
DATE 8-14-68
SCALE None

MECHANICAL DESIGN STANDARD
DESIGN
PIPING SPECIFICATION "S3"
Department of Engineering
PACIFIC GAS AND ELECTRIC COMPANY
SAN FRANCISCO, CALIFORNIA

DRAWING LIST
SUPERSEDES
SUPERSEDED BY
SHEET NO. SHEETS
DRAWING NUMBER 047285
CHANGE 7

35 MM Mm 7

62-1804 (2500 8-67)

DESIGN CONDITIONS
1400 PSIG, 650°F
1500 PSIG, 350°F
1750 PSIG, 200°F

PIPE

½" - 2" — Schedule 80S, Seamless Stainless Steel ASTM A312 Grade TP 304.

2½" - 6" — Schedule 80S, Seamless Stainless Steel ASTM A312 Grade TP 304. with Supplementary Requirement S1.

8"-16" — Schedule 100, Seamless Stainless Steel ASTM A312 Grade TP 304 with Supplementary Requirement S1 or Welded Stainless Steel ASTM A358. Grade TP 304 with Supplementary Requirements S1 & S2.

FITTINGS

2" & Under — 3000 Lb. Socket Welding Ends, Forged Stainless Steel ASTM A182 Grade F304.

2½" - 6" — Schedule 80S, Butt-Welding Ends, Seamless Stainless Steel ASTM A403 Grade WP 304 with Supplementary Requirements S1 & S2.

8"-16" — Schedule 100, Butt-Welding Ends, Seamless Stainless Steel ASTM A403 Grade WP 304 with Supplementary Requirements S1 & S2.

FLANGES

2" & Under — 1500 Lb. 1/4" Raised Face, Socket Welding Ends, Forged Stainless Steel ASTM A182 Grade F304.

2½" - 16" — 1500 Lb., 1/4" Raised Face, Welding Neck, Forged Stainless Steel ASTM A182 Grade F304, Bored to Match Pipe Wall Thickness.

CHG.	DATE	DESCRIPTION	GM	BY	CH.	APPD.
6	3-7-73	REVISED BOLT SPEC.		GLB	KCB.	HGW
5	10-8-71	REVISED AND REISSUED		GK	GLB	HGW
4	11-23-70	REISSUED - NO CHANGES		RLB	[illegible]	HGW
3	1-5-70	REV. 8"-16" PIPE & FITTINGS SCH.; ADD NOTES		LKB		HGW
2	10-24-69	REV. BOLTS & NUTS MATL. SH. 2		[illegible]	[illegible]	HGW
1	8-28-69	REV. DESIGN COND., PIPE SIZES & MATL. AND FLG. RATING		LKB	LKB	HGW

APPROVED BY: HGW

SUPV. BY S. Boghosian
DSGN. S.K.B.
DR. P. Kodani
CH. Branson
O.K. RHS/GM
DATE 8-14-68
SCALE None

MECHANICAL DESIGN STANDARD
DESIGN
PIPING SPECIFICATION "S5"
Department of Engineering
PACIFIC GAS AND ELECTRIC COMPANY
SAN FRANCISCO, CALIFORNIA

DRAWING LIST
SUPERSEDES
SUPERSEDED BY
SHEET NO. 1 2 SHEETS
DRAWING NUMBER 047287
CHANGE 6

PRINTED ON DIEPO NO. 1000H CLEARPRINT 8-67

BOLTS	Bolt-Stud, Stainless Steel ASTM A193 Grade B8.
NUTS	Hex Nuts, Heavy Series, Semi-Finished, Stainless Steel ASTM A194 Grade 8.
GASKETS	0.175" Thick, Flexitallic, Style CG.

NOTES:

1. No bending allowance is included in these nominal wall thicknesses, any piping bent must not be less than minimum listed wall thickness for that Schedule Pipe After Bending.
2. 900# forged stainless steel ASTM A182 Grade F316 flanges may be used instead of 1500# ASTM A182 Grade F304 called out above.

DESIGN CONDITIONS
2485 PSIG, 680°F
2510 PSIG, 650°F
2800 PSIG, 200°F

PIPE

2" & Under	Schedule 160, Seamless Stainless Steel ASTM A376 Grade TP 304.
2½" & Over	Seamless Stainless Steel ASTM A376.
2½" - 3"	Schedule 160, Grade TP304 with Supplementary Requirements S1 & S3.
4"	Schedule 120, Grade TP 316 With Supplementary Requirements S1 & S3.
6"	Schedule 160, Grade TP 316 with Supplementary Requirements S1 & S3.
8" - 10"	Schedule 140, Grade TP 316 With Supplementary Requirements S1, S2 & S3.
12" - 16"	Schedule 160, Grade TP 316 With Supplementary Requirements S1, S2 & S3.

Supplementary Requirements S1, S2 & S3 to be Performed on One End Each Length.

FITTINGS

2" & Under	6000 Lb., Socket Welding Ends, Forged Stainless Steel ASTM A182 Grade F304.
2½" - 16"	Butt-Welding Ends, Seamless Stainless Steel ASTM A403 with Supplementary Requirements S1, S2, & S4, Grade and Schedule to Match Pipe.

FLANGES

2" & Under	1500 Lb., 1/4" Raised Face, Socket Welding Ends, Forged Stainless Steel ASTM A182 Grade F316. Bored to Match Pipe.
2½" - 16"	1500 Lb., 1/4" Raised Face, Welding Neck, Forged Stainless Steel ASTM A182 Grade F316, Bored to Match Pipe Schedule.

35 MM Neg. 7

CHG.	DATE	DESCRIPTION	GM	BY	CH.	APPD.
7	3-7-73	REV. SUPPL. REQMNT FOR 6" PIPE, REV. BOLT SPEC.		GAB	KCS.	
6	10-8-71	REVISED AND REISSUED		GK	GAB	
5	11-23-70	REISSUED - NO CHANGES		RLG		
4	3-31-70	REVISED & REDRAWN		LKB	KM	
3	1-5-70	ADDED SUPPLEMENTARY REQTS TO PIPE & FITTINGS		LKB		

APPROVED BY

SUPV. BY S. Boghosian
DSGN. S.K.B.
DR. P. Kodani
CH. RG
O.K. RPS
DATE 3-5-70
SCALE None

MECHANICAL DESIGN STANDARD
DESIGN
PIPING SPECIFICATION "S6"
Department of Engineering
PACIFIC GAS AND ELECTRIC COMPANY
SAN FRANCISCO, CALIFORNIA

DRAWING LIST
SUPERSEDES
SUPERSEDED BY
SHEET NO. 1 2 SHEETS
DRAWING NUMBER 047288
CHANGE 7

BOLTS	Bolt-Stud, Stainless Steel ASTM A193 Grade B8.
NUTS	Hex Nuts, Heavy Series, Semi-Finished, Stainless Steel ASTM A194 Grade 8.
GASKETS	0.175" Thick, Flexitallic, Style CG.

NOTES:

1. Pipe & Fittings on this Specification, where required by ANS B31.7 Class Applicable for the Piping System Involved, Shall Receive the Additional Volumetric Analysis Required.

DESIGN CONDITIONS
50 PSIG, 100°F

PIPE

2" & Under — Schedule 10S, Seamless Stainless Steel ASTM A312 Grade TP 316.

FITTINGS

2" & Under — 3000 LB., Socket Welding Ends, Forged Stainless Steel ASTM A182 Grade F316.

FLANGES

2" & Under — 150 LB., Raised Face, Socket Welding Ends, Forged Stainless Steel ASTM A182 Grade F316

BOLTS — Bolts, Hex Head Stainless Steel ASTM A193 Grade B8.

NUTS — Hex Nuts, Heavy Series, Semi-Finished, Stainless Steel ASTM A194 Grade 8.

GASKETS — 1/16" Thick, Johns-Manville - JM Style 86A or Approved Equivalent.

NOTES

1. Used for Acid Service
2. No Bending is Allowed for this Spec.

APPROVED BY	CHG.	DATE	DESCRIPTION	GM	BY	CH.	APPD.
	3	5-7-73	REVISED BOLT SPEC.		GAS	RCL	
	2	10-8-71	REVISED AND REISSUED		GR	GEO	
	1	11-23-70	CORRECTED TO DATE		RLB		

SUPV. BY S. BOGHOSIAN
DSGN. S.K.B.
DR. STD.
CH. Dalling
O.K. LKB 1Ft
DATE 10-8-70
SCALE NONE

MECHANICAL DESIGN STANDARD
DESIGN
PIPING SPECIFICATION "S8"
DEPARTMENT OF ENGINEERING
PACIFIC GAS AND ELECTRIC COMPANY
SAN FRANCISCO, CALIFORNIA

DRAWING LIST
SUPERSEDES
SUPERSEDED BY
SHEET NO. SHEETS
DRAWING NUMBER 047290
CHANGE 3

PIPE BASE MATERIAL				SERVICE	PIPING MATERIAL DESIGNATION
Carbon steel, polypropylene lined				Corrosive fluids	
DESIGN CONDITIONS				NOMINAL SIZE RANGE	
PRESS. (PSIG)		TEMP. (°F)			
MAX.	MIN.	MAX.	MIN.	8" and under	F1
250	Vacuum	200*	0	INSTALLATION	
				Exposed (indoor and outdoor)	

*Decrease rating in accordance with the requirements of Note 1, Sheet 3.

PIPE

All Sizes: Carbon steel, polypropylene lined internally, manufactured in flanged sections of maximum uniform length, or cut to size only to suit specific requirements.

Each section ends shall be factory flanged and lined. Pipelining material shall be flared or molded over faces of flanges to form a gasketless jointing monolithic section liner.

Field operations shall include possibility of pipe cutting and flanging, and flaring or molding of liner.

Materials and construction

1. Barrel:

Made of the following factory bonded elements:

a. Casing - Seamless or welded, Standard weight, carbon steel pipe per ASTM A53, Grade A or B, or A120. Plain or threaded ends per manufacturer's flanging requirements.

b. Liner - Seamless Tubular extrusion of virgin polypropylene resin per ASTM D 2146, Type I or II tightly bonded to casing per manufacturer's method.

Minimum wall thickness of liner shall be:

.125" for pipes smaller than 1 1/2" nominal size.
.150" for pipes 1 1/2" to 3" incl. nominal size.
.200" for pipes larger than 3" nominal size.

APPROVED BY									
		1	5-6-80	APPROVED FOR DESIGN	190270	T.O.	MGG	WWD	
		01	3-26-79	ISSUED FOR BID SPEC. 5677					
		REV.	DATE	DESCRIPTION	GM	DWN.	CHKD.	SUPV.	APVD

GM 190270	MECHANICAL-PIPING	B.M.
SUPV. W.W. DODSON	MATERIAL SPECIFICATION "F1"	DWG. LIST
DSGN. ALBITO	CONDENSATE POLISHING DEMINERALIZER SYSTEM	SUPSDS
DWN ~	DIABLO CANYON POWER PLANT, UNIT 1 & 2	SUPSD BY
CHKD. M. GUZMAN	DEPARTMENT OF ENGINEERING	SHEET NO. 1 of 3 SHEETS
O.K.	PACIFIC GAS AND ELECTRIC COMPANY	1058863 REV. 1
DATE 3-19-79 SCALE ~	SAN FRANCISCO, CALIFORNIA	MICROFILM 1

RM INDEXED REV. 1

2. Flanges:

a. Flange - Threaded or slip-on, ANSI Class 150, flat face, forged carbon steel per ASTM A105. Dimensions per ANSI B 16.5.

b. Liner Facing - Pipe liner ends shall be flared or molded over face of flanges to form stress free raised pattern joint facings of even thickness. Facings shall not extend beyond edge of flange bolt holes. Liner facing thicknesses shall not be less than those given for preceding barrel liners.

FITTINGS

All Sizes: Flanged ductile iron, polypropylene lined and faced.

Materials and construction

Made of the following factory bonded elements:

a. Castings - Ductile iron per ASTM A395 with integral, plain face flanges. Drilling and Dimensions per ANSI A21.10 or B 16.1 (ANSI Class 125). Back or spot faced bolt holes.

b. Liner - Injection molding of virgin polypropylene resin per ASTM D2146 Type I or II.

Internal liner shall be tightly bonded to castings and extend over face of flanges to form stress free raised pattern joint facings of even thickness.

Facings shall not extend beyond edge of flange bolt holes. Liner and facing thicknesses shall not be less than those given for preceding barrel liners.

BOLTS

All Sizes: Machine, hex. head, heavy series, semi-finished, carbon steel, per ASTM A307, Grade B, Coarse thread series per ANSI B 1.1, Class 2A fit. Galvanized, cadmium or zinc plated.

NUTS

All Sizes: Hexagon, heavy series, semi-finished, carbon steel, per ASTM A194, Grade 2H, coarse thread series per ANSI B 1.1, Class 2B fit. Galvanized, cadmium or zinc plated.

SPACERS

All Sizes: Solid polypropylene, ring type, 1/4" min. thickness, flat, single or double taper style.

- Flat spacers shall be used as gaskets when mating lined flanges with unlined or dissimilarly lined flanges.
- Tappered spacers shall be used for directional changes where standard fittings are not suitable to angular requirements (small angles).

BRANCH CONNECTIONS

All Sizes: Fittings shall be used for all branch connections.

NOTES:

1. Maximum temperature rating of piping shown in Design Conditions, sheet 1, is subject to decrease depending on the nature of the fluid(s) conveyed. Manufacturers or their Chemical Resistance Charts shall be consulted in all cases to establish maximum temperature ratings for specific fluid(s).

2. Piping shall be installed as shop fabricated only. There shall be no field operation detrimental to liner's integrity (Welding, bending, drilling, tapping, reaming, cutting, etc.).

3. Installation of piping, field operations and bolting torques shall be per manufacturers' recommendations.

COMMERCIAL REFERENCES

Peabody Doré Company
P.O. Box 42081
Houston, Texas 77042

Plastic Lined Piping Systems (Polydor E-5000)

Dow Chemical U.S.A.
Plastic Lined Piping Products
Drawer H
Walnut Creek, California 94596

Dow Plastic Lined Piping Products (PPL)

906101

THICKNESS REQUIRED				
CLASS / NOM. PIPE SIZE	III	IV	V	VI
BELOW 2"	1"	1½"	1½"	2½"
2"				
2½"				
3"			2"	3"
4"				
6"				3½"
8"	1½"			
10"				
12"				
14"			2½"	
16"				
18"	2"	2"		4"
20"				
24"				
28"				
30"				
36"				

CLASS	TEMP. RANGE (°F)
I	SEE NOTE 1
III	151 – 400 (SEE NOTE 5)
IV	401 – 524
V	525 – 675
VI	676 – 1100
SPL	SEE NOTE 2

NOTES:

1) FOR CLASS I, LOW-TEMPERATURE INSULATION SHALL BE USED. FOR CLASSES III, IV, V AND VI, HIGH TEMPERATURE MASS INSULATION SHALL BE USED THROUGHOUT. FOR INSULATION MATERIAL SPECIFICATION SEE P.G.&E. SPEC. 8737.
2) THE USAGE OF SPECIAL INSULATION IS TO FACILITATE THE PERFORMING OF THE INSERVICE INSPECTION REQUIREMENTS OF SECTION XI OF ASME BOILER AND PRESSURE VESSEL CODE. THE EXTENT OF THE INSERVICE INSPECTION IS SHOWN ON P&I 102028. FOR SPECIAL INSULATION MATERIAL SPECIFICATION SEE P.G.&E. SPEC. 8748.
3) FOR INDIVIDUAL PIPE INSULATION CLASS SEE LINE DESIGNATION TABLE (DWG 102040).
4) TYPICAL LINE DESIGNATION WITH INSULATION CLASS SYMBOLS AS SHOWN ON DWGS.

INSULATION CLASS

1 | K2 | 153 | 8 III

5) CLASS III INSULATION SHOWN ON THIS ISSUE INCLUDES CLASS II INSULATION SHOWN ON PREVIOUS ISSUE OF THIS DWG.
6) THE LETTER "P" FOLLOWING AN INSULATION CLASS DENOTES INSULATION FOR PERSONNEL PROTECTION ONLY I.E. III P, IV P, ETC. PERSONNEL PROTECTION INSULATION SHALL BE INSTALLED ON ALL SYSTEMS WITH FLUID TEMPERATURE 151°F OR HIGHER, WHETHER OR NOT INSULATION IS REQUIRED FOR THE PRESERVATION OF HEAT, AS DETAILED BELOW:

A. HORIZONTAL RUNS: ALL PIPING 8 FT. OR LESS FROM PIPE CENTER LINE TO FLOORS, DECKING PLATFORMS, STAIRWAY OR OTHER NORMAL STANDING, WALKING OR CLIMBING LOCATIONS SHALL BE INSULATED. THE INSULATION SHALL BE RUN 3 FT. FROM HAND RAIL.

B. VERTICAL RUNS: ALL PIPING SHALL BE INSULATED TO A POINT 8 FT. ABOVE THE FLOOR, DECKING PLATFORM, STAIRWAY OR ANY OTHER NORMAL STANDING, WALKING OR CLIMBING LOCATION. THIS INCLUDES ALL PIPING WITHIN A HORIZONTAL DISTANCE OF 3 FT. FROM HAND RAIL.

THICKNESS OF THIS INSULATION IS ESTABLISHED ACCORDING TO LINE TEMPERATURE AS PER CLASSES SHOWN ON "THICKNESS REQUIRED" TABLE.

THE FOLLOWING SKETCH IS A TYPICAL SECTION TO ILLUSTRATE AREAS DESCRIBED ON PARAGRAPHS "A" AND "B".

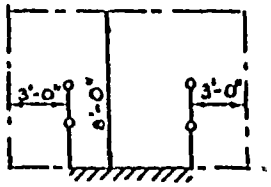

REGISTERED PROFESSIONAL ENGINEER D. V. KELLY No. 9269 MECHANICAL STATE OF CALIFORNIA

UNITS 1 & 2

COAST VALLEYS DIVISION

NO.	DATE	DESCRIPTION	CH	BY	CH.	APPD
3	5-11-71	ISSUED FOR BIDS SPEC 8737		B.V.	KCB	
2	11-17-71	REVISED AND REDRAWN		K.B.	KCB	
1	9-8-70	APPVD FOR CONSTRUCTION		K.B.		

TABLE OF CHANGES

APPROVED BY

GM 167027 169972
SUPERV. E.E.
DSGN. E.
DR. E.B.
CH. KC
D.K. KCL
DATE 9-28-71
SCALE NONE

PIPING INSULATION SPECIFICATION

DIABLO CANYON

DEPARTMENT OF ENGINEERING
PACIFIC GAS AND ELECTRIC COMPANY
SAN FRANCISCO, CALIFORNIA

BILL OF MATERIAL
DRAWING LIST
SUPERSEDES
SUPERSEDED BY
SHEET NO. SHEETS

DRAWING NUMBER 101905 CHANGE 3

GENERAL COMPUTATION SHEET

JOB NO. / FILE NO. / LOCATION

SUBJECT: PIPE INSULATION WEIGHTS

BY: R. L. Gervis DATE: 3-18-70 CHECKED BY: D. Blum APPROVED BY:

WEIGHTS, LB./FT.

NOMINAL PIPE SIZE (Inches)	INSULATION THICKNESS (Inches) 1	1 1/2	2	2 1/2	3	3 1/2	4	4 1/2	5
1/2									
3/4									
1	0.68	1.20	1.92	2.76	3.72	4.80			
1 1/2	0.79	1.32	2.52	3.48	4.56	5.76			
2	0.96	1.63	2.52	3.48	4.44	5.64	7.08		
2 1/2	1.09	2.28	3.24	4.32	5.52	6.96	8.40		
3	1.20	2.04	3.00	4.08	5.28	6.72	8.16		
4	1.56	2.52	3.60	4.68	6.12	7.56	9.25		
6	2.04	3.24	4.56	6.12	7.68	9.96	11.65		
8		4.08	5.64	7.92	9.60	11.65	14.05		
10		5.16	7.08	9.00	11.15	13.45	15.85		
12		6.00	8.16	10.55	12.85	15.35	18.25		
14		6.12	8.40	10.89	13.51	16.10	18.85		
16		6.84	9.36	12.12	14.90	17.90	20.90		
18		7.68	10.44	13.45	16.45	19.70	23.02		
20		6.40	11.51	14.75	18.00	21.50	25.10		
22		9.25	12.57	16.08	19.65	23.30	27.20		
24		9.97	13.58	17.30	21.22	25.20	29.30		
26		10.82	14.68	18.68	22.80	27.00	31.42		
28		11.60	15.75	19.95	24.33	28.82	33.48		
30		12.35	16.75	21.22	25.90	30.65	35.60		

NOTES:

1. FIGURES COMPILED FROM GRINNELL - PIPE HANGER DESIGN AND ENGINEERING - INSULATION WEIGHT FACTORS PAGE 49 (TABLE)

2. WEIGHTS COMPUTED USING DENSITY = 12 #/FT.^{3}

3. WEIGHT OF ALUMINUM WRAPPING NEGLECTED

ITEM D

VALVE DRAWING

150 lb. | type no. 915D Double R/L Valve

Triggerlock — Lever Actuated | serial no. [illegible] 64

Fisher Controls Rev. No.

Note:
4 Flange Bolts Thru Body, Others To Clear Valve Dia.

ITEM D

DC-663314-10-2

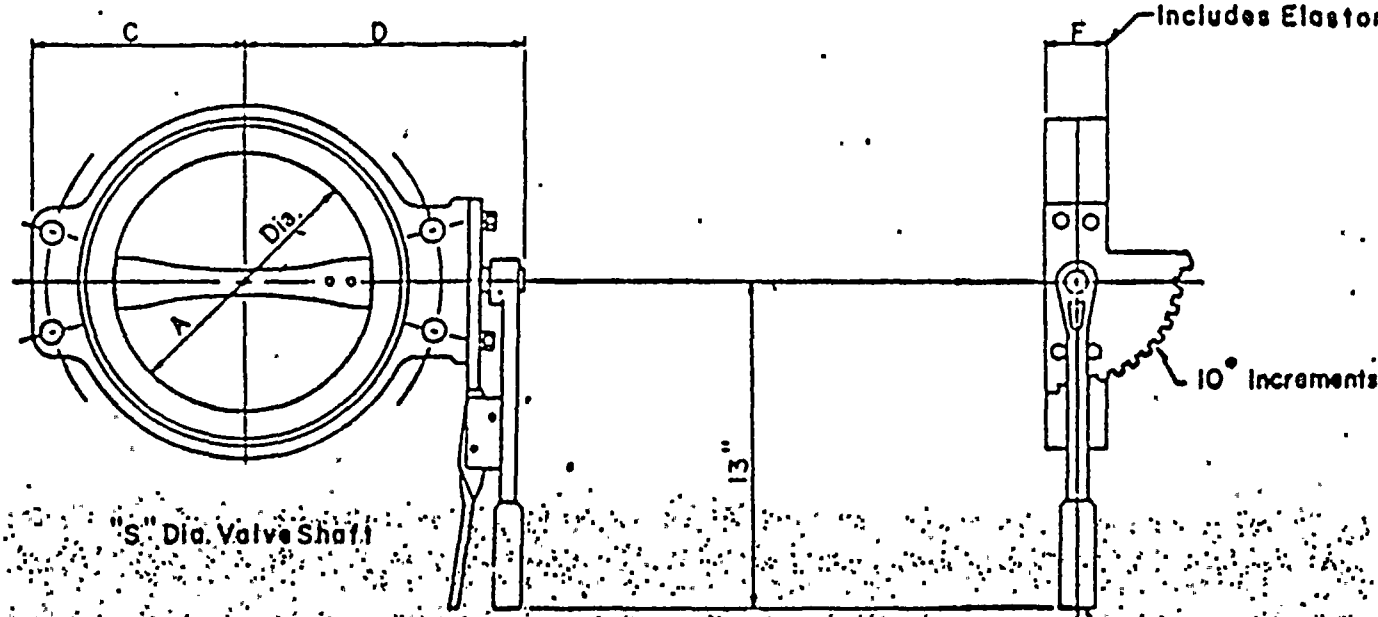

Pipe Size	Dimensions in Inches								Flange Dimensions 125-150 Lb. USAS			
	A	B	C	D	E	F	G	S	Bolt Circle	Bolt Dia	Bolt Holes	Flange Dia
1½	1⅞		2¾	4⅛		1½		⅝	3⅞	½	4	5
2	1⅞		2¼	4⅝		2		½	4¼	⅝	4	6
2½	2⅜		3⅛	5⅛		2		½	5½	⅝	4	7
3	2⅞		3½	5¾		2		⅝	6	⅝	4	7½
4	3⅞		4⅛	6½		2		⅝	7½	⅝	8	9
5	4⅞		4¾	7		2¼		¾	8½	¾	8	10
6	5⅞		5⅛	7½		2¼		¾	9½	¾	8	11
8	7⅞		6¼	8¾		2½		1	11¾	¾	8	13½
10	9⅞		7¾	10		2½		1	14¼	⅞	12	16

RECEIVED FOR CONSTRUCTION
RECORDED
JUN 25 1971
DEPARTMENT OF ENGINEERING

CERTIFIED FOR CONSTRUCTION

Approx. Weight 50#, 107014

DIMENSIONS CERTIFIED CORRECT

PURCHASER Pacific Gas & Electric Co.

PURCHASE ORDER NO. HR-8729

JOB NO.

CONTINENTAL S.O. P-88062-10

TAG Spec. 8729, Item #3[illegible]
Unit 1, Diablo Canyon Site

AGENT: [illegible]

DATE: March 18, 1971

BY R. P. [illegible]

FISHER CONTROLS COMPANY — Continental Division
Coraopolis, Pennsylvania 15108

P-88062-10 H-16026

ITEM E

HORIZONTAL AND NEW VERTICAL

HOSGRI RESPONSE SPECTRA

VERTICAL RESPONSE SPECTRA

NEW SPECTRA - 5 MASS MODEL

ANALYSIS 4A - 26

checked by: [illegible] 11-17-81

PREPARED BY [illegible]

```
ISAMB 1
 NEW HOSGST--> MASS SPECTRA
 VERTICAL
 4
 0.0
 1.0
 C-IST-EXT-IRAN-VERT-NEW            2 PC DAMPING                    ELEV 85.00
 0.0
 1.0
 C-CDR-VERT-IRAN-VERT-NEW           2 PC DAMPING                    ELEV 114.00
 0.0
 1.0
 C-ANNULUS VERT--2 PC DAMPING                          FRAME 1  ELEV. 106.67
 0.0
 1.0
 C-ANNULUS VERT--2 PC DAMPING                          FRAME 1  ELEV. 116.86
 0.0
 1.0
 C-ANNULUS VERT--2 PC DAMPING                          FRAME 5  ELEV. 106.67
 0.0
 1.0
 C-ANNULUS VERT--2 PC DAMPING                          FRAME 5  ELEV. 116.86
                          ***********************************
                          ***********************************
                          ***********************************
11
 NEW HOSGST--> MASS SPECTRA
 VERTICAL
```

CONDENSED
ENVELOPE OF SPECTRAL ACCELERATIONS AT

```
 C-IST-EXT-IRAN-VERT-NEW            2 PC DAMPING      AT ELEV.  85.000
 C-CDR-VERT-IRAN-VERT-NEW           2 PC DAMPING      AT ELEV. 114.000
 C-ANNULUS VERT--2 PC DAMPING                       F AT ELEV. 106.670
 C-ANNULUS VERT--2 PC DAMPING                       F AT ELEV. 116.860
 C-ANNULUS VERT--2 PC DAMPING                       F AT ELEV. 106.670
 C-ANNULUS VERT--2 PC DAMPING                       F AT ELEV. 116.860
```

TO BE USED AS DESIGN SPECTRAL ACCELERATIONS

	PERIOD	ACCEL(G)	ACCEL(IN/SEC2)	FREQUENCY(HZ)
1	0.0150	.0510	321.50	9999.00
2	.0240	.0573	334.73	41.67
3	.0290	.0950	345.87	34.48
4	.0340	1.0515	366.62	29.41
5	.0390	1.1665	451.13	25.64
6	.0400	1.2750	472.90	25.00
7	.0450	1.5192	575.20	22.22
8	.0520	2.2000	687.27	19.23
9	.0540	2.5883	941.03	18.52
10	.0560	2.6160	1003.88	17.86
11	.0590	2.6203	1011.55	16.95
12	.0630	2.9309	1119.52	15.87
13	.0650	3.1305	1231.47	15.38
14	.0720	4.0150	1569.55	13.89
15	.0750	4.0273	1566.15	13.33
16	.0760	4.0599	1563.75	13.16
17	.0770	4.1010	1581.72	12.99
18	.0790	4.4300	1727.56	12.66
19	.0810	4.5513	1757.25	12.35
20	.0920	4.5580	1757.57	10.87
21	.0950	4.5550	1759.57	10.52
22	.0970	4.1920	1614.42	10.31
23	.1000	3.8130	1471.77	10.00

	.1040			
24	[illegible]	1.5770	1352.29	3.62
25	[illegible]	1.1900	1222.23	4.93
26	.1239	2.0700	1111.12	4.13
27	.1410	2.0160	1097.83	7.09
28	.1[illegible]0	2.3130	955.63	5.72
29	.2[illegible]9	2.1620	835.75	4.70
30	.2[illegible]0	2.1150	817.63	4.97
31	.2254	2.1300	822.27	4.54
32	.2[illegible]3	2.1900	827.77	4.30
33	.1090	2.1500	823.77	3.33
34	.1[illegible]3	2.1360	822.27	3.08
35	.1[illegible]	2.1[illegible]5	819.08	2.86
36	.8[illegible]3	2.0500	772.08	2.50
37	.8233	1.9808	764.35	2.35
38	.5373	1.4100	544.32	1.57
39	.7370	1.2600	563.25	1.36
40	.4[illegible]0	1.1042	426.26	1.25
41	1.0000	.9500	366.74	1.00

```
16.04.16.SPECIFIA.PA.1500.
16.04.30.APL . INPUT  .   0.0061094.
16.04.30.JSTA.0.0021AC..KSA.
16.04.36. PLEASE CHANGE YOUR LOG SUPPLIED PASSWORD
16.04.36.0.
16.04.36.ABO . 00.
16.04.37.        .??? OF SECOND, EXECUTION TIME
16.04.43.CHANGE.LOGOFF.PORT.
16.04.49.PCAL.(    SPILL )
16.04.41.CHAN 51. SPID.1500.
16.04.41.GET.15.SGI/OPTLIBRARY.
16.04.42.MESSAGE. SYSTEMIPS IS BACK TO NORMAL OP
16.04.42..
16.04.42.MESSAGE. ALL EXECUTION COMMANDS ARE AS S
16.04.42.EDIT
16.04.43.INPUT.SYMBOL.
16.04.43.-BUILD OUTPUT,BC=PR,SI=AZ,DN=0002IAC,FID
16.04.43.-PRF,PRI.
16.04.43. BUILD COMPLETE.
16.04.43.DEASIGN.  INAZVY
16.14.44.DEASIGN.  SPECOUT
16.04.45.DEASIGN.  PR T
16.04.45.SSJOB.SP=500.
16.04.46.COPY.INPUT,TAPE19.
16.04.46. COPY COMPLETE.
16.04.46.SET.INT,TAPE19.
16.04.46.COPY.CI.TAPE19.0010.PR.
16.04.46. END OF INFORMATION ENCOUNTERED.
16.04.46.SET.INP.TAPE19.
16.04.46.COPY.SI.TAPE19.OUT.
16.04.46. END OF INFORMATION ENCOUNTERED.
16.04.46.ATTACH,ZMOSOR1/PW=10000L.
16.04.46.ZMOSPRJ.
16.04.47.     STOP
16.04.47.REPLACE.TAPE14*INPUT.
16.04.52.REPLACE.TAPE11*XAA267.
16.04.52.REWIND.TAPE12.
16.04.53.COPY.CI.TAPE12,MAINSORT
16.04.53. END OF INFORMATION ENCOUNTERED.
16.04.53.PRINT,MAINSORT.
16.04.53. PACK COMPLETE.
16.04.53.REPLACE,MAINSORT.
16.04.56.SET.INP.TAPE13.
16.04.56.COPYSBF.TAPE13.OUT.
16.04.56. END OF INFORMATION ENCOUNTERED.
16.04.56.PACK.OUT.
16.04.56. PACK COMPLETE.
16.04.56.REWIND,OUT.
16.04.56.COPYSBF.OUT.BUIPUT.
16.04.56. END OF INFORMATION ENCOUNTERED.
16.04.56.CPU        3.311 SEC.
16.04.56.CHIP       2.773 SEC.
16.04.56.EXIT.
```

* 4A26H *

SPECOUT

RESPEC … PECORA

HORIZONTAL

4A-26

prepared by: J Horn 10-28-81

checked by: P Hostetler 10-29-81

```
INEA HOSGPI SPECTRA FOR 4A-26
 HORIZONTAL
0.0
1.116
2.65
C-INT-   -TRAN-HOR-PLU                2 PC DAMPING          IL 114.00    .089
C-INT-   -TOR-S01-PLU                 2 PC DAMPING          IL 114.00    .115
2.65
C-INT-   -TRAN-HOR-PLU                2 PC DAMPING          IL 127.00    .024
C-INT-   -TOR-S01-PLU                 2 PC DAMPING          IL 127.00    .112
0.0
2.65
C-INT-   -TRAN-HOR-PLU                2 PC DAMPING          IL 110.00    .084
C-INT-   -TOR-S01-PLU                 2 PC DAMPING          IL 110.00    .118
0.0
2.65
C-INT-   -TRAN-HOR-PLU                2 PC DAMPING          IL 102.00    .091
C-INT-   -TOR-S01-PLU                 2 PC DAMPING          IL 102.00    .121
1.116
2.65
C-INT-   -TRAN-HOR-NEW                2 PC DAMPING          IL 127.00    .097
C-INT-   -TOR-S01-NEW                 2 PC DAMPING          IL 127.00    .127
2.65
C-INT-   -TRAN-HOR-NEW                2 PC DAMPING          IL 114.00    .100
C-INT-   -TOR-S01-NEW                 2 PC DAMPING          IL 114.00    .130
0.0
2.65
C-INT-   -TRAN-HOR-NEW                2 PC DAMPING          IL 110.00    .103
C-INT-   -TOR-S01-NEW                 2 PC DAMPING          IL 110.00    .133
0.0
2.65
C-INT-   -TRAN-HOR-NEW                2 PC DAMPING          IL 102.00    .106
C-INT-   -TOR-S01-NEW                 2 PC DAMPING          IL 102.00    .137
LAST
                         ****************************
                         ****************************
                         ****************************
11
 NEW HOSGPI SPECTRA FOR 4A-26
 HORIZONTAL


 CONDENSED
 ENVELOPE OF SPECTRAL ACCELERATIONS AT
  C-INT-   -TRAN-HOR-BL.;HOP:.02(4.;CC0&100\92P:--      AT ELEV.  116.000
  C-INT-   -TRAN-HOR-BL.;HOP:.02(4.;CC0&100\92P:--      AT ELEV.  110.000
  C-INT-   -TRAN-HOR-BL.;HOP:.02(4.;CC0&100\92P:--      AT ELEV.  102.000
  C-INT-   -TRAN-HOR-NE.;HOP:.02(4.;CC0&100\92P:--      AT ELEV.  116.000
  C-INT-   -TRAN-HOR-NE.;HOP:.02(4.;CC0&100\92P:--      AT ELEV.  110.000
  C-INT-   -TRAN-HOR-NE.;HOP:.02(4.;CC0&100\92P:--      AT ELEV.  102.000
  TO BE USED AS DESIGN SPECTRAL ACCELERATIONS
        PERIOD    ACCEL(G)  ACCEL(IN/S**2)    FREQUENCY(HZ)
   1    0.0050     .8223       317.56          1999.00
   2     .0090     .8350       322.31           111.11
   3     .0130     .8415       324.85            76.92
   4     .0200     .8731       337.07            50.00
   5     .0270     .9106       351.53            37.04
   6     .0290     .9260       357.45            34.48
   7     .0330     .9664       373.06            30.30
   8     .0340     .9816       378.97            29.41
   9     .0360    1.0335       398.93            27.78
  10     .0370    1.1046       426.41            27.03
```

INTERPOLATED ELEVATION

ECCENTRICITY

TRANSLATIONAL

ROTATION

12	.0380	1.1156	430.67	26.32
13	.0430	1.1522	444.78	23.26
14	.0440	1.1626	448.79	22.73
15	.0460	1.2339	476.32	21.74
16	.0480	1.2674	489.24	20.83
17	.0540	1.3913	537.09	18.52
18	.0580	1.4704	567.71	17.86
19	.0630	1.8871	728.49	15.87
20	.0670	2.4310	938.45	14.93
21	.0720	3.6003	1387.84	13.89
22	.0740	3.9518	1525.54	13.51
23	.0740	3.9519	1525.54	13.51
24	.0750	4.1326	1595.36	13.33
25	.0770	4.2034	1622.67	12.99
26	.0820	4.2046	1623.16	12.20
27	.0860	4.1836	1615.04	11.63
28	.0880	4.1536	1603.47	11.36
29	.0900	4.0589	1566.87	11.11
30	.0920	3.9317	1517.79	10.87
31	.0940	3.7610	1451.88	10.64
32	.0950	3.6540	1410.69	10.53
33	.1000	3.3208	1281.96	10.00
34	.1010	3.2777	1265.31	9.90
35	.1030	3.2174	1242.06	9.71
36	.1040	3.1539	1217.53	9.43
37	.1110	3.0532	1178.67	9.01
38	.1120	3.0339	1171.18	8.93
39	.1150	2.9820	1151.18	8.70
40	.1140	2.9416	1135.58	8.47
41	.1270	2.9018	1120.20	7.87
42	.1280	2.8974	1118.52	7.81
43	.1320	2.8715	1116.23	7.58
44	.1380	2.8833	1113.07	7.25
45	.1550	2.8963	1118.07	6.45
46	.1670	2.9437	1136.38	5.99
47	.1690	2.9480	1138.04	5.95
48	.2080	3.0166	1164.54	4.81
49	.2110	3.0071	1160.85	4.74
50	.2630	2.8375	1096.17	3.73
51	.2740	2.8223	1089.51	3.65
52	.2950	2.7452	1059.75	3.39
53	.3320	2.6287	1014.79	3.01
54	.3610	2.5523	985.29	2.77
55	.3730	2.5226	973.81	2.68
56	.3940	2.4690	953.14	2.54
57	.4010	2.4547	947.63	2.49
58	.4060	2.4459	944.23	2.46
59	.4330	2.4141	931.94	2.31
60	.4600	2.3805	918.98	2.17
61	.4630	2.3721	915.72	2.16
62	.4760	2.3570	909.84	2.13
63	.4780	2.3540	908.75	2.11
64	.4910	2.3503	907.19	2.08
65	.5270	2.3030	891.37	1.89
66	.5960	2.1820	842.34	1.68
67	.6509	2.0410	787.91	1.54
68	.7690	1.8770	724.60	1.41
69	.7730	1.7130	661.29	1.27
70	.8460	1.5540	597.91	1.19
71	.8480	1.5354	592.72	1.18
72	.8540	1.5246	588.54	1.17
73	.8810	1.4730	568.65	1.13
74	.9540	1.3503	512.06	1.06

12	.0380	1.1156	430.67	26.32
13	.0430	1.1522	444.78	23.26
14	.0440	1.1626	448.79	22.73
15	.0460	1.2339	476.32	21.74
16	.0480	1.2674	489.24	20.83
17	.0540	1.3913	537.09	18.52
18	.0560	1.4704	567.71	17.86
19	.0630	1.8871	728.49	15.87
20	.0670	2.4310	938.45	14.93
21	.0720	3.6003	1387.84	13.89
22	.0740	3.9518	1525.54	13.51
23	.0740	3.9518	1525.54	13.51
24	.0750	4.1326	1595.36	13.33
25	.0770	4.2034	1622.67	12.99
26	.0820	4.2046	1623.16	12.20
27	.0860	4.1836	1615.04	11.63
28	.0880	4.1536	1603.47	11.36
29	.0900	4.0589	1566.87	11.11
30	.0920	3.9317	1517.79	10.87
31	.0940	3.7610	1451.88	10.64
32	.0950	3.6540	1410.60	10.53
33	.1000	3.1208	1281.96	10.00
34	.1010	3.2777	1265.31	9.90
35	.1030	3.2174	1242.06	9.71
36	.1070	3.1539	1217.53	9.43
37	.1110	3.0532	1178.67	9.01
38	.1120	3.0338	1171.18	8.93
39	.1150	2.9820	1151.18	8.70
40	.1130	2.9416	1135.58	8.47
41	.1270	2.9018	1120.20	7.87
42	.1280	2.8974	1118.52	7.81
43	.1320	2.8715	1116.23	7.58
44	.1380	2.8833	1113.07	7.25
45	.1550	2.8963	1118.09	6.45
46	.1670	2.9437	1136.38	5.99
47	.1680	2.9480	1138.04	5.95
48	.2080	3.0166	1164.54	4.81
49	.2110	3.0071	1160.85	4.74
50	.2630	2.8395	1096.17	3.73
51	.2740	2.8223	1089.51	3.65
52	.2950	2.7452	1059.75	3.39
53	.3320	2.6287	1014.79	3.01
54	.3410	2.5523	985.29	2.77
55	.3730	2.5226	973.81	2.68
56	.3940	2.4690	953.14	2.54
57	.4010	2.4547	947.63	2.49
58	.4060	2.4459	944.23	2.46
59	.4330	2.4141	931.94	2.31
60	.4600	2.3805	918.98	2.17
61	.4630	2.3721	915.72	2.16
62	.4700	2.3570	909.88	2.13
63	.4740	2.3540	908.75	2.11
64	.4910	2.3503	907.19	2.08
65	.5290	2.3030	891.37	1.89
66	.5960	2.1820	842.34	1.68
67	.6509	2.0410	787.91	1.54
68	.7090	1.8770	724.60	1.41
69	.7730	1.7130	661.29	1.29
70	.8460	1.5540	599.91	1.19
71	.8489	1.5354	592.72	1.18
72	.8543	1.5245	588.54	1.17
73	.8830	1.4730	568.65	1.13
74	.9479	1.3283	512.66	1.06

75 1.2150 1.00

1.0000

```
17.03.17.SPECI=A.P4.1500.
17.03.17.ABE , IEFOI , 0.0148100B.
17.03.17.USER.PUP21KC,,KWA.
17.03.17. PLEASE CHANGE YOUR CLC SUPPLIED PASSWORD
17.03.17.0.
17.03.17.ABG , P4.
17.03.19.       .207 CP SECONDS EXECUTION TIME
17.03.20.CHARGE,F1060**,*003*.
17.03.21.IGALIE     NOTICE 1
17.03.22.GOTO.1190.
17.03.22.[illegible]
17.03.22.PROUTE.OUTPUT.DC*PR.[illegible]UP*.00021KC.F19
17.03.22.*PGI.GET.
17.03.22. ROUTE COMPLETE.
17.03.22.REQUIRE.  *4A26H*
17.03.23.REQUIRE.  SPECOUT
17.03.23.SPOLIT*.AP*SCO.
17.03.23.COPYPS.INPUT,TAPE19.
17.03.23. COPY COMPLETE.
17.03.23.REWIND.TAPE19.
17.03.23.COPYSBF.TAPE19,MAINSPK.
17.03.23. END OF INFORMATION ENCOUNTERED.
17.03.23.REWIND.TAPE19.
17.03.23.COPYSBF.TAPE19,OUT.
17.03.23. END OF INFORMATION ENCOUNTERED.
17.03.24.ATTACH,ZHPSCRJ/UN=F3060*C.
17.03.24.ZHPSCRJ.
17.03.27.     STOP
17.03.27.REPLACE.TAPE14*INPISO.
17.03.28.REPLACE.TAPE11*4A26H.
17.03.28.REWIND.TAPE12.
17.03.28.COPYSBF.TAPE12,MAINSPK.
17.03.29. END OF INFORMATION ENCOUNTERED.
17.03.29.PACK,MAINSPK.
17.03.31. PACK COMPLETE.
17.03.31.REPLACE.MAINSPK.
17.03.32.REWIND,TAPE13.
17.03.32.COPYSBF.TAPE13,OUT.
17.03.32. END OF INFORMATION ENCOUNTERED.
17.03.32.PACK,OUT.
17.03.32. PACK COMPLETE.
17.03.33.REWIND,OUT.
17.03.33.COPYSBF.OUT,OUTPUT.
17.03.33. END OF INFORMATION ENCOUNTERED.
17.03.33.STIME       5.426 UNITS.
17.03.33.CTIME       6.061 SECS.
17.03.33.DAYFILE.
```

ITEM F

SEISMIC ANCHOR MOVEMENTS

LEGEND

10 NODAL POINT NUMBER

(7) ELEMENT NUMBER

⊕ NODAL POINTS FOR WHICH STRUCTURE RESPONSES AND ACCELERATION RESPONSE SPECTRA ARE COMPUTED

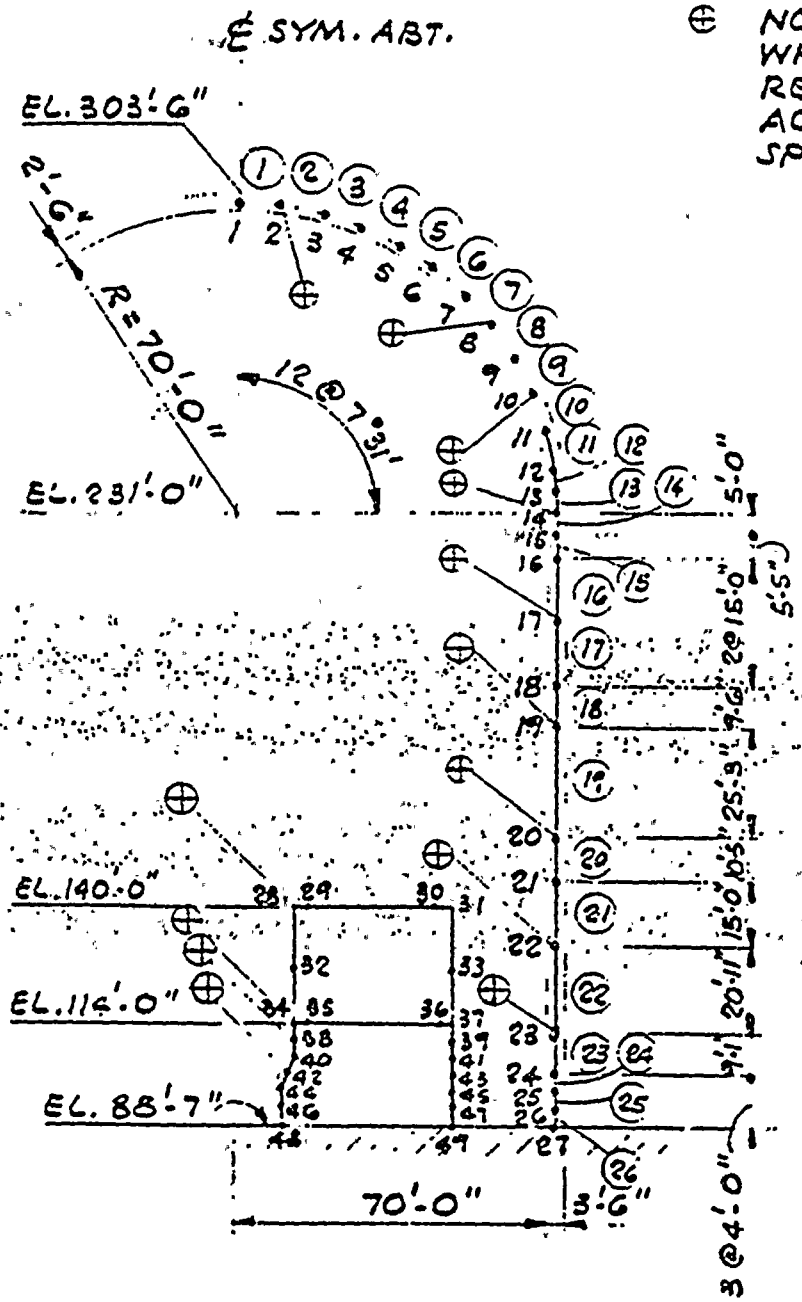

FINITE - ELEMENT MODEL FOR TRANSLATIONAL & VERTICAL ANALYSIS

DIABLO CANYON

CONTAINMENT STRUCTURE

FIGURE NO. 7(b)

TABLE 4a

CONTAINMENT EXTERIOR STRUCTURE

MAXIMUM HORIZONTAL DISPLACEMENTS

Nodal Point**	Elev. (ft)	Horizontal Displacement (in.)				
		Blume-Hosgri Horiz. Input*	Newmark-Hosgri Horiz. Input*	Vertical Input	3-Component SRSS Blume-Hosgri	3-Component SRSS Newmark-Hosgri
2	301.64	1.124	1.016	0.002	1.124	1.016
8	274.37	1.036	0.939	0.009	1.036	0.939
10	258.27	0.969	0.881	0.020	0.970	0.882
14	231.00	0.828	0.758	0.020	0.828	0.758
17	205.58	0.665	0.615	0.008	0.665	0.615
19	181.08	0.534	0.493	0.009	0.534	0.494
20	155.83	0.394	0.363	0.011	0.394	0.364
22	130.58	0.262	0.243	0.012	0.263	0.243
23	109.67	0.156	0.143	0.012	0.156	0.144

*Effective horizontal acceleration at Containment Shell due to absolute sum of translational response and torsional response from 5% eccentricity.

**See Figure 7b.

TABLE 4b

CONTAINMENT EXTERIOR STRUCTURE

MAXIMUM VERTICAL DISPLACEMENTS

Nodal Point*	Elev. (ft)	Vertical Displacement (in.)				
		Blume-Hosgri Horiz. Input	Newmark-Hosgri Horiz. Input	Vertical Input	3-Component SRSS Blume-Hosgri	3-Component SRSS Newmark-Hosgri
2	301.64	0.032	0.029	0.108	0.113	0.112
8	274.37	0.198	0.175	0.076	0.212	0.191
10	258.27	0.228	0.202	0.066	0.237	0.213
14	231.00	0.240	0.211	0.056	0.246	0.218
17	205.58	0.221	0.196	0.049	0.226	0.202
19	181.08	0.196	0.174	0.041	0.200	0.179
20	155.83	0.158	0.142	0.031	0.161	0.145
22	130.58	0.109	0.098	0.020	0.111	0.100
23	109.67	0.058	0.053	0.010	0.059	0.054

*See Figure 7b.

TABLE 4c

CONTAINMENT INTERIOR STRUCTURE

MAXIMUM HORIZONTAL DISPLACEMENTS AND ROTATIONS*

Nodal Point**	Elevation (ft)	Blume-Hosgri Displacement (in.)	Newmark-Hosgri Displacement (in.)	Blume-Hosgri Rotation (rad x 10^{-5})	Newmark-Hosgri Rotation (rad x 10^{-5})
28	140.00	0.05	0.06	1.13	1.21
34	114.00	0.03	0.03	0.78	0.82

*Due to horizontal input only.
**See Figure 7b.

CONTAINMENT INTERIOR STRUCTURE
MAXIMUM VERTICAL DISPLACEMENTS*

Structure	Location**	Elevation (ft)	Displacement (in.)
Concrete Structure	Nodal Point 71	140.00	0.0054
	Nodal Point 49	114.00	0.0032
	Nodal Point 28	106.67	0.0024
	Nodal Point 7	101.33	0.0015
Annulus (Steel) Structure	Frame 1	140.00	0.060
	Frame 2	140.00	0.080
	Frame 3	140.00	0.064
	Frame 4	140.00	0.057
	Frame 5	140.00	0.082
	Frame 1	116.86	0.035
	Frame 2	116.86	0.050
	Frame 3	116.86	0.031
	Frame 4	116.86	0.037
	Frame 5	116.86	0.056
	Frame 1	106.67	0.015
	Frame 2	106.67	0.028
	Frame 3	106.67	0.026
	Frame 4	106.67	0.026
	Frame 5	106.67	0.037
	Frame 1	101.33	0.014
	Frame 2	101.33	0.035
	Frame 3	101.33	0.040
	Frame 4	101.33	0.014
	Frame 5	101.33	0.032

*Due to vertical input only.
**See accompanying figures.

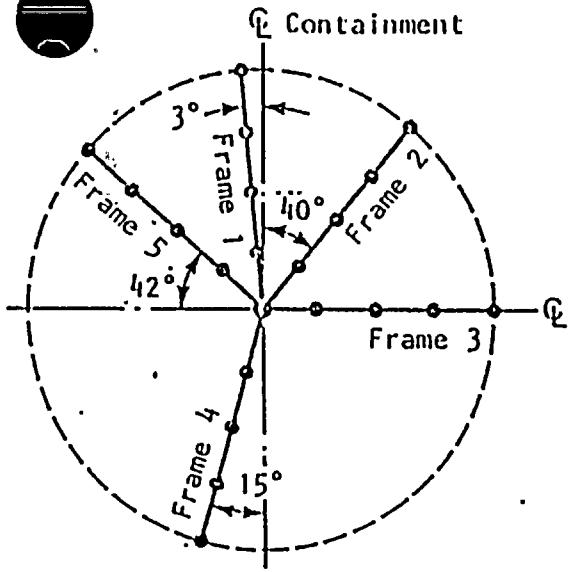

Plan

N

LEGEND

2 — Node number

• — Steel structure mass point

⊙ — Concrete structure mass point

Note: Nodes 1, 7, 28, 49, 50, and 71 are along centerline of model and are common to all five frames.

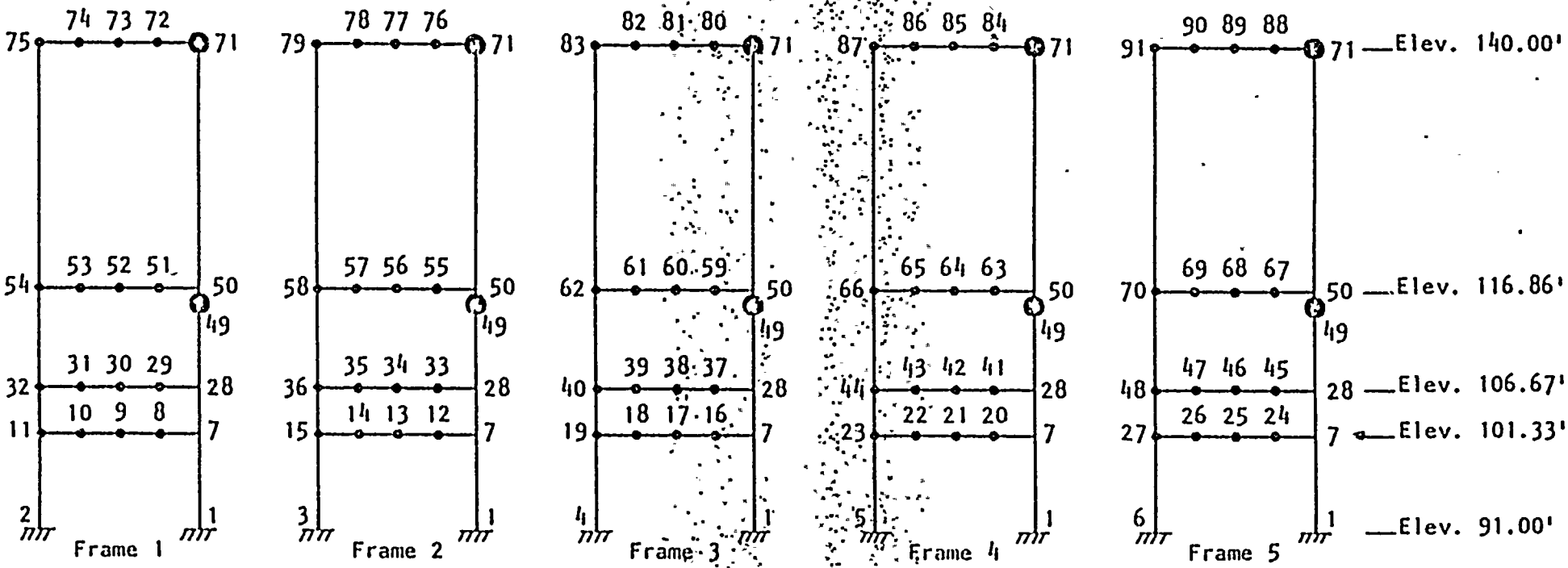

Elevations

MATHEMATICAL MODEL, ANNULUS STRUCTURE, UNIT 1

ITEM H

FILE 33 FORMS (HANGER LOAD TABULATION)

76-14 (3-80)

PROJECT. DC. #1	LINE NO. 1 K 3289 2½ C	SEQ. NO. A81	39
FILE NO. 33	SYSTEM RV SUPT. CLRS 1&2 CCW SUP. HDR.	RESTR. ANCHOR	24A

TYPE OF ANALYSIS	SEISMIC					
ANALYSIS NO.	4A-26	4A-26	4A-26	4A-26		
REV. NO./DATE	2/9-15-77	2/9-15-77	2/9-12-77	2/9-12-77		
CASE	DE	DE	HOSGRI	HOSGRI		
DATA POINT	60 (1)	60 (2)	60 (1)	60 (2)		
FORCE X (LB)	8	13	15	24		
FORCE Y (LB)	20	27	56	72		
FORCE Z (LB)	19	-25	53	68		
MOMENT X (IN-LB)	244	337	693	893		
MOMENT Y (IN-LB)	344	740	662	1306		
MOMENT Z (IN-LB)	128	339	227	573		
MVMT. (IN)	—	—	—	—		
MVMT. (IN)	—	—	—	—		
MVMT. (IN)	—	—	—	—		

TYPE OF ANALYSIS	THERMAL					
ANALYSIS NO.	66	OTHER SIDE	66	OTHER SIDE		
REV. NO./DATE	A/8-22-74	NOT ANALYZED	A/8-22-74	NOT ANALYZED		
CASE	NORMAL (1)		ACCIDENT (1)			
DATA POINT	285		285			
FORCE X (LB)	-5		-5			
FORCE Y (LB)	-4		-4			
FORCE Z (LB)	-15		-15			
MOMENT X (FT-LB)	-38		-38			
MOMENT Y (FT-LB)	-65		-65			
MOMENT Z (FT-LB)	40		40			
MVMT. (IN)	—		—			
MVMT. (IN)	—		—			
MVMT. (IN)	—		—			

TYPE OF ANALYSIS	DEAD LOAD	TRIB. PIPE WT.
ANALYSIS NO.		4A-26
REV. NO./DATE		11-15-77
DATA POINT		60
FORCE X (LB)		31
FORCE Y (LB)	-100	56
FORCE Z (LB)		84

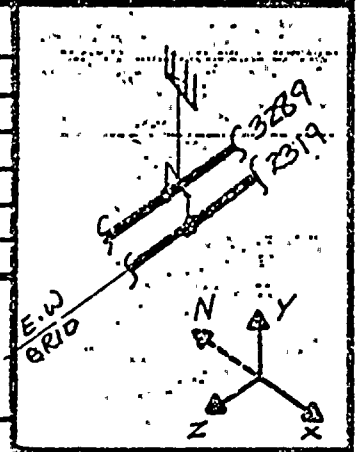

REV.	DATE	DESCRIPTION OF CHANGE	BY	CHKD.
7	12-18-8	REVISED HOSGRI & D.L. (SHT 3 & 4) LOADS INCREASE	DPJ	DEB
6	10-9-81	REVISED HOS. DATA (SH. 3)	HH	DPJ
5	12-23-80	REVISED DE DATA, ADDED TRIB. MASS	Z.T.	SW

P. G. & E. CO.

049251 | 7

SH 1 OF 4 | REV.

FILE COPY
FILE COPY

FILE 33

39 / 24A

81A

ANCHOR DATA

USE VALUES GIVEN FROM COMPUTER OUTPUT

LINE NO.	1-K-2319-1½ C

THERMAL ANAL. DATA	NORMAL		ACCIDENT		TEST	
ANAL. NO.	294 II	OTHER SIDE NOT ANAL				
ANAL. DATE	8-20-74					
DATA PT. NO.	130					
FX (LB)	-26					
FY (LB)	-72					
FZ (LB)	-235					
MX (FT-LB)	-15					
MY (FT-LB)	-59					
MZ (FT-LB)	19					
DEAD LOAD (LB)	~~-100~~					

FILE COPY

FILE COPY

SEISMIC ANAL. DATA				HOSGRI ANAL. DATA			
ANAL. NO.	4A-16		OTHER SIDE NOT ANAL	4A-16		OTHER NOT ANAL	
ANAL. DATE	4-16-73			9-12-77			
DATA PT. NO.	62 (X,Y)	62 (Y,Z)		62 (X)	62 (Z)		
FX (LB)	10	10		22	25		
FY (LB)	33	18		102	53		
FZ (LB)	203	79		293	200		
MX (IN-LB)	534	266		1130	588		
MY (IN-LB)	94	96		214	240		
MZ (IN-LB)	637	300		692	347		

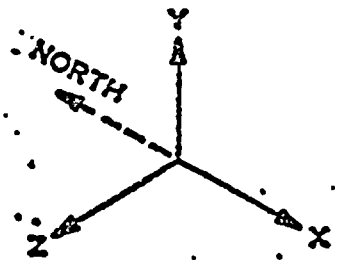

REV. 6 FOR REVISED HOS. SEE SH. 4 H.S.S. 10-9-81 SH. 2 OF 4

DSGN G. Norris Rev 4 1-9-80 CHKD: CHG Z. TOMSKY REV. 4

REV. 5 NO CHANGE ON THIS PAGE 1-10-80 NO CHANGE

CHANGE 7

76-145u (3-80)

PROJECT. DC #1	LINE NO. 1 K 3289 2½ C	SEQ. NO. A81	39 / 24A
FILE NO. 33	SYSTEM RV·SUPT CLRS 1&2 CCW HDR	RESTR. ANCHOR	

TYPE OF ANALYSIS	SEISMIC					
ANALYSIS NO.		4A-26	4A-26	44-3289	44-3289	44-3289
REV. NO./DATE		3/10-4-81	4/11-23-81	12-28-77	12-28-77	12-28-77
CASE		HOSGRI	HOSGRI	DE.	DOE	HOSGRI
DATA POINT		60	60			
FORCE X (LB)		27	24	92	92	92
FORCE Y (LB)		100	70	33	33	33
FORCE Z (LB)		98	66	196	196	196
MOMENT X (-LB)		1245	872	112	112	112
MOMENT Y (-LB)		1453	1310	113	113	113
MOMENT Z (-LB)		602	577	74	74	74
MVMT. X (IN)		0	0			
MVMT. Y (IN)		0	0			
MVMT. Z (IN)		0	0			

TYPE OF ANALYSIS	THERMAL					
ANALYSIS NO.						
REV. NO./DATE						
CASE						
DATA POINT						
FORCE (LB)						
FORCE (LB)						
FORCE (LB)						
MOMENT (-LB)						
MOMENT (-LB)						
MOMENT (-LB)						
MVMT. (IN)						
MVMT. (IN)						
MVMT. (IN)						

FILE COPY

TYPE OF ANALYSIS	DEAD LOAD	TRIB. PIPE WT.
ANALYSIS NO.	4A-26	44-3289
REV. NO./DATE	1/11-23-81	12-28-77
DATA POINT	60	
FORCE X (LB)	7	46
FORCE Y (LB)	-11	33
FORCE Z (LB)	-1	98
MOMENT X (IN-LB)	61	SEE A81 FOR FILE 44 CALCULATIONS
MOMENT Y (IN-LB)	174	
MOMENT Z (IN-LB)	-2	

SEE SHT. 1

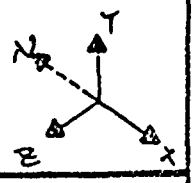

P. G. & E. CO.

REV.	DATE	DESCRIPTION OF CHANGE	BY	CHKD.	SH 3 OF 4	REV.
7	12-19-81	REVISED DE, HOS, TRANSFERED FILE 44 DATA	DPJ	DEB		7
6	10-9-81	REVISED HOSGRI	HTI	DPJ		

76-145u (3-80)

PROJECT. DC*1	LINE NO. 1 K 2319 1½ C	SEQ. NO. A-81
FILE NO. 33	SYSTEM RV SUPT CLR 2/3 CCW RETURN	RESTR. ANCH.

39 / 24A

TYPE OF ANALYSIS	SEISMIC					
ANALYSIS NO.	44-2319	~~4A-16~~	44-2319	4A-16	4A-16	44-2319
REV. NO./DATE	12-28-77	~~3/10-3-81~~	12-28-77	4/12-17-81	4/12-17-81	12-28-77
CASE	DE	~~HOSGRI~~	DDE	DE	HOSGRI	HOSGRI
DATA POINT		~~62~~		62	62	
FORCE X (LB)	26	~~24~~	26	171	358	26
FORCE Y (LB)	13	~~102~~	13	30	65	13
FORCE Z (LB)	261	~~295~~	261	105	245	261
MOMENT X (IN-LB)	28	~~1127~~	28	315	692	28
MOMENT Y (IN-LB)	61	~~237~~	61	3264	6759	61
MOMENT Z (IN-LB)	33	~~691~~	33	1961	4083	33
MVMT. (IN)				—	—	
MVMT. (IN)				—	—	
MVMT. (IN)				—	—	

TYPE OF ANALYSIS	THERMAL					
ANALYSIS NO.						
REV. NO./DATE						
CASE						
DATA POINT						
FORCE (LB)						
FORCE (LB)						
FORCE (LB)						
MOMENT (-LB)						
MOMENT (-LB)						
MOMENT (-LB)						
MVMT. (IN)						
MVMT. (IN)						
MVMT. (IN)						

FILE COPY

TYPE OF ANALYSIS	DEAD LOAD	TRIB. PIPE WT.	
ANALYSIS NO.	4A-16	4A-16	44-2319
REV. NO./DATE	0/12-18-81	11-15-77	12-28-77
DATA POINT	62	62	
FORCE X (LB)	0	11	13
FORCE Y (LB)	-16	51	13
FORCE Z (LB)	4	100	130
MOMENT X (IN-LB)	147	SEE A81 FOR FILE 44 CALCULATIONS	
MOMENT Y (IN-LB)	3		
MOMENT Z (IN-LB)	-32		

SEE SHT 1

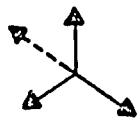

P. G. & E. CO.

REV.	DATE	DESCRIPTION OF CHANGE	BY	CHKD.
7	12-18-81	REVISED DE HOS + D.L TRANSFERED FILE 44 DATA	DPJ	DEB
6	10-9-81	REVISED HOS. ADDED TRIB. WT.	HH	DPJ

SH 4 OF 4 — REV. 7

PROJECT. DC-#1	LINE NO. 1 K 3289 2½ C	SEQ. NO. H-92	40 / 53R
FILE NO. 33	SYSTEM RY SUPT CLRS 1½ CCW SUP. HDR	RESTR. Y	

TYPE OF ANALYSIS	SEISMIC					
ANALYSIS NO.		4A-26		4A-26		
REV. NO./DATE	/	3/10-4-81	/	4/11-23-81	/	/
CASE		HOS		HOS		
DATA POINT		55		55		
FORCE X (LB)		—		—		
FORCE Y (LB)		84		66		
FORCE Z (LB)		0		0		
MOMENT X (IN-LB)		0		0		
MOMENT Y (IN-LB)		0		0		
MOMENT Z (IN-LB)		0		0		
MVMT. Δ X (IN)		0		0		
MVMT. Δ Y (IN)		0		0		
MVMT. Δ Z (IN)		0.060		0.041		

TYPE OF ANALYSIS	THERMAL					
ANALYSIS NO.						
REV. NO./DATE	/	/	/	/	/	/
CASE						
DATA POINT						
FORCE X (LB)						
FORCE Y (LB)						
FORCE Z (LB)						
MOMENT X (IN-LB)						
MOMENT Y (IN-LB)						
MOMENT Z (IN-LB)						
MVMT. X (IN)						
MVMT. Y (IN)						
MVMT. Z (IN)						

FILE COPY

TYPE OF ANALYSIS	DEAD LOAD	TRIB. PIPE WT.
ANALYSIS NO.	4A-26	4A-26
REV. NO./DATE	1/11-23-81	/11-15-77
DATA POINT	55	55
FORCE X (LB)	—	—
FORCE Y (LB)	-67	67
FORCE Z (LB)	0	0

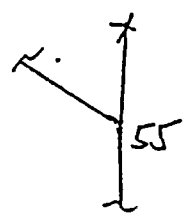

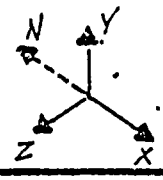

REV.	DATE	DESCRIPTION OF CHANGE	BY	CHKD.
4	12-7-81	NEW 4A-26 HOS & DEAD LD.; LOADS/MOVEMENTS INCREASED	PH	K. Chan
3	10-5-81	REV. HOS. ADDED T.M.	H.SS	PI

P. G. & E. CO.

SH 4 OF 3 REV.

PROJECT. DC-#1	LINE NO. 1 K 3290 2½ C	SEQ. NO. H-92
FILE NO: 33	SYSTEM RV SUPT CLRS 1&2 CCW RET. HDR	RESTR. Y

40 / 53R

TYPE OF ANALYSIS	SEISMIC					
ANALYSIS NO.	4A-16	~~4A-16~~	4A-16			
REV. NO./DATE	4/12-16-81	~~3/10-2-81~~	4/12-11-81			
CASE	DE	~~HOS~~	HOS			
DATA POINT	52	~~52~~	52			
FORCE X (LB)	0	~~0~~	0			
FORCE Y (LB)	106	~~701~~	233			
FORCE Z (LB)	0	~~0~~	0			
MOMENT X (-LB)	0	~~0~~	0			
MOMENT Y (-LB)	0	~~0~~	0			
MOMENT Z (-LB)	0	~~0~~	0			
MVMT. Δ X (IN)	0.61	~~0.652~~	1.263			
MVMT. Δ Y (IN)	0	~~0~~	0			
MVMT. Δ Z (IN)	0.040	~~0.103~~	0.096			

TYPE OF ANALYSIS	THERMAL					
ANALYSIS NO.						
REV. NO./DATE						
CASE						
DATA POINT						
FORCE X (LB)						
FORCE Y (LB)						
FORCE Z (LB)						
MOMENT X (-LB)						
MOMENT Y (-LB)						
MOMENT Z (-LB)						
MVMT. X (IN)						
MVMT. Y (IN)						
MVMT. Z (IN)						

FILE COPY

TYPE OF ANALYSIS	DEAD LOAD	TRIB. PIPE WT.
ANALYSIS NO.		4A-16
REV. NO./DATE		11-10-77
DATA POINT		52
FORCE X (LB)		—
FORCE Y (LB)		308
FORCE Z (LB)		—

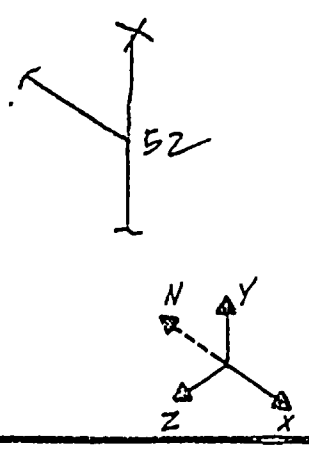

P. G. & E. CO.

REV.	DATE	DESCRIPTION OF CHANGE	BY	CHKD.
4	12-18-81	NEW 4A-16 DE & HOS, LOADS/MOVEMENTS INCREASED	PH	kcchan
3	10-5-81	REV. HOS. ADDED T.M.	HSS	PI

SH 2 OF 3 — REV. 4

FILE 53

53R

H92

RESTRAINT & RIGID HGR. DATA

LINE NO.	1-K-3289-2 1/2 C			~~1-K-3290-2 1/2 C~~		
RESTRAINT DIRECTION	Y			~~Y~~		
SEIS. ANAL. NO. & DATE	4A-26 / 9-15-77			~~4A-16 / 4-16-73~~		
SEIS. DATA PT.	55			~~52~~		
SEIS. FORCE (LB)	Fx = ±.73	Fy = ± 34	Fz = ±.000	~~Fx = ± —~~	~~Fy = ± 34~~	~~Fz = ± —~~
SEIS. MVMT. (INCH)	Δx = .000	Δy = .000	Δz = .016	~~Δx = .448~~	~~Δy = .013~~	~~Δz = .041~~
THERM. ANAL. NO.& DATE	66A / 8-22-74			294 II / 8-20-74		
THERM. DATA PT.	290 (NORMAL)			95		
THERM. FORCE (LB)	Fx = —	Fy = —	Fz = —	Fx = —	Fy = —	Fz = —
THERM. MVMT. (INCH)	Δx = -.026	Δy = .014	Δz = -.015	Δx = -.045	Δy = .037	Δz = -.023
PIPE DEAD WT. (LB)	~~Fy = 87~~			Fy = 87		
LINE NO.						
RESTRAINT DIRECTION	Y			~~Y~~		
SEIS. ANAL. NO.& DATE	~~HOSGRI (4A-26) 9-26-77~~			~~HOSGRI ANAL. (4A-16) 9-12-77~~		
SEIS. DATA PT.	~~55~~			~~52~~		
SEIS. FORCE (LB)	~~Fx = ±138~~	~~Fy = ± 64~~	~~Fz = ±.000~~	~~Fx = ±.000~~	~~Fy = ±694~~	~~Fz = ±.000~~
SEIS. MVMT. (INCH)	~~Δx = .000~~	~~Δy = .000~~	~~Δz = .042~~	~~Δx = .654~~	~~Δy = .000~~	~~Δz = .102~~
THERM. ANAL. NO.& DATE	66A 8-22-74 (ACC)					
THERM. DATA PT.	290					
THERM. FORCE (LB)	Fx = —	Fy = —	Fz = —			
THERM. MVMT. (INCH)	Δx = -.026	Δy = .014	Δz = -.015			
PIPE DEAD WT. (LB)						
LINE NO.						
RESTRAINT DIRECTION						
SEIS. ANAL. NO.& DATE				HOSGRI ANAL.		
SEIS. DATA PT.						
SEIS. FORCE (LB)	Fx = ±	Fy = ±	Fz = ±	Fx = ±	Fy = ±	Fz = ±
SEIS. MVMT. (INCH)	Δx =	Δy =	Δz =	Δx =	Δy =	Δz =
THERM. ANAL. NO.& DATE						
THERM. DATA PT.						
THERM. FORCE (LB)	Fx =	Fy =	Fz =			
THERM. MVMT. (INCH)	Δx =	Δy =	Δz =			
PIPE DEAD WT. (LB)						

FILE COPY

FILE COPY

HGR. 40/55R TAKES CARE OF "X" FORCE AT NODE PT. 55 ON SEISMIC & HOSGRI 4A-26, FOR LINE 1-K-3289-2 1/2

REV. 3. FOR NEW HOS. DATA SEE SHTS. 1 & 2 H.S.S. 10-5-81 SH. 3 OF 3

REV. 4 FOR NEW DE, HOS, & DL DATA, SEE SHTS 1 & 2 P.H. 12-18-81

DSGN D. CARTER 1-14-80 (REV. 2)

CHKD: Z. TOMSKY REV. 2 1-14-80

REV. 2 NO CHANGE

CHANGE 4

PROJECT. DL-#1	LINE NO. 1 K 3290 2½ C	SEQ. NO. 6-805
FILE NO. 33	SYSTEM RV SUPT CLRS 1½2 CCW RET HDR	RESTR. L H2

40 / 5R

TYPE OF ANALYSIS	SEISMIC					
ANALYSIS NO.	4A-16	~~4A-16~~	4A-16			
REV. NO./DATE	4/12-16-81	~~3/10-3-8~~	4/12-11-81			
CASE	DE	~~HOS~~	HOS			
DATA POINT	54	~~54~~	54			
FORCE X (LB)	0	~~0~~	0			
FORCE Y (LB)	0	~~0~~	0			
FORCE Z (LB)	194	~~474~~	467			
MOMENT X (-LB)	0	~~0~~	0			
MOMENT Y (-LB)	0	~~0~~	0			
MOMENT Z (-LB)	0	~~0~~	0			
MVMT. Δ X (IN)	0.356	~~0.314~~	0.737			
MVMT. Δ Y (IN)	0	~~0~~	0.			
MVMT. Δ Z (IN)	0	~~0~~	0.			

TYPE OF ANALYSIS	THERMAL					
ANALYSIS NO.						
REV. NO./DATE						
CASE						
DATA POINT						
FORCE X (LB)						
FORCE Y (LB)						
FORCE Z (LB)						
MOMENT X (-LB)						
MOMENT Y (-LB)						
MOMENT Z (-LB)						
MVMT. X (IN)						
MVMT. Y (IN)						
MVMT. Z (IN)						

FILE COPY

TYPE OF ANALYSIS	DEAD LOAD	TRIB. PIPE WT.
ANALYSIS NO.		4A-16
REV. NO./DATE		11-10-77
DATA POINT		54
FORCE X (LB)		0
FORCE Y (LB)		0
FORCE Z (LB)		267

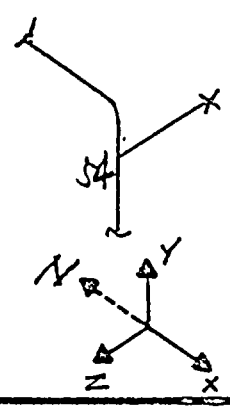

P. G. & E. CO.

REV.	DATE	DESCRIPTION OF CHANGE	BY	CHKD.
4	12-18-81	NEW 4A-16 HOS & DE, LOADS/MOVEMENTS INCREASED	PH	
3	10-5-81	REV. HOS. ADDED T.H.	H.SS	PI

SH 1 OF 3 REV. 4

PROJECT. DC-#1	LINE NO. 1 K 3289 2/2 C	SEQ. NO. S-805
FILE NO. 33	SYSTEM RV SUPT CLRS 1&2 CCW SUP HDR	RESTR. 1 H x

40 / 55R

TYPE OF ANALYSIS	SEISMIC					
ANALYSIS NO.		4A-26	-	4A-26		
REV. NO./DATE.	/	3/10-3-81	/	4/11-23-81	/	/
CASE		HOS.		HOS		
DATA POINT		55		55		
FORCE X (LB)		157		136		
FORCE Y (LB)		-		-		
FORCE Z (LB)		0		0		
MOMENT X (-LB)		0		0		
MOMENT Y (-LB)		0		0		
MOMENT Z (-LB)		0		0		
MVMT. Δ X (IN)		0		0		
MVMT. Δ Y (IN)		0		0		
MVMT. Δ Z (IN)		0.060		0.041		

TYPE OF ANALYSIS	THERMAL					
ANALYSIS NO.						
REV. NO./DATE	/	/	/	/	/	/
CASE						
DATA POINT						
FORCE X (LB)						
FORCE Y (LB)						
FORCE Z (LB)						
MOMENT X (-LB)						
MOMENT Y (-LB)						
MOMENT Z (-LB)						
MVMT. X (IN)						
MVMT. Y (IN)						
MVMT. Z (IN)						

FILE COPY

TYPE OF ANALYSIS	DEAD LOAD	TRIB. PIPE WT.
ANALYSIS NO.	4A-26	4A-26
REV. NO./DATE	1/11-23-81	/11-15-17
DATA POINT	55	55
FORCE X (LB)	-8	97
FORCE Y (LB)	-	-
FORCE Z (LB)	0	0

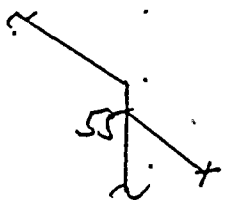

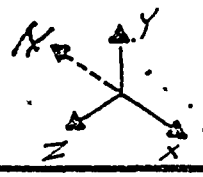

P. G. & E. CO.

REV.	DATE	DESCRIPTION OF CHANGE	BY	CHKD.
4	12-7-81	NEW 4A-26 HOS & DEAD LOAD, LOADS/MOVEMENTS INCREASED	PH.	
3	10-5-81	REV. HOS. ADDED T.H.	H.SS	PI

SH 2 OF 3 — REV. 4

FILE 33

40
55R

5805

RESTRAINT & RIGID HGR. DATA

LINE NO.	1-K-3290-2 1/2 C			1-K-3289-2 1/2 C		
RESTRAINT DIRECTION	Z			X		
SEIS. ANAL. NO. & DATE	4A-16 4-16-73			4A-26 / 9-15-77		
SEIS. DATA PT.	54			55		
SEIS. FORCE (LB)	Fx = ±.000	Fy = ±.000	Fz = ±190	Fx = ± 73	Fy = ± 34	Fz = ± 0
SEIS. MVMT. (INCH)	Δx = .219	Δy = .013	Δz = .000	Δx = .000	Δy = .000	Δz = .016
THERM. ANAL. NO.& DATE	294 II .8-20-74			66A 8-22-74		
THERM. DATA PT.	BET. 95 & 105			BET 287 & 290 NORMAL		
THERM. FORCE (LB)	Fx = —	Fy = —	Fz = —	Fx = —	Fy = —	Fz = —
THERM. MVMT. (INCH)	Δx = .023	Δy = .024	Δz = .032	Δx = -.016	Δy = .009	Δz = .016
PIPE DEAD WT. (LB)						

LINE NO.						
RESTRAINT DIRECTION	Z			X		
SEIS. ANAL. NO.& DATE	HOSGRI (4A-16) 9-12-77			HOSGRI ANAL. 4A-26/9-26-77		
SEIS. DATA PT.	54			55		
SEIS. FORCE. (LB)	Fx = ±0.0	Fy = ±0.0	Fz = ±470.	Fx = ±138	Fy = ±64	Fz = ± 0
SEIS. MVMT. (INCH)	Δx = .314	Δy = .000	Δz = .000	Δx = .000	Δy = .000	Δz = .042
THERM. ANAL. NO.& DATE				66A 8-22-74		
THERM. DATA PT.				BET. 287 & 290 ACC		
THERM. FORCE (LB)	Fx =	Fy =	Fz =	Fx = —	Fy = —	Fx = —
THERM. MVMT. (INCH)	Δx =	Δy =	Δz =	Δx = -.016	Δy = .009	Δz = .016
PIPE DEAD WT. (LB)						

LINE NO.						
RESTRAINT DIRECTION						
SEIS. ANAL. NO.& DATE				HOSGRI ANAL.		
SEIS. DATA PT.						
SEIS. FORCE (LB)	Fx = ±	Fy = ±	Fz = ±	Fx = ±	Fy = ±	Fz = ±
SEIS. MVMT. (INCH)	Δx =	Δy =	Δz =	Δx =	Δy =	Δz =
THERM. ANAL. NO.& DATE						
THERM. DATA PT.						
THERM. FORCE (LB)	Fx =	Fy =	Fz =			
THERM. MVMT. (INCH)	Δx =	Δy =	Δz =			
PIPE DEAD WT. (LB)						

FILE COPY

FILE COPY

HGR. 40/53R TAKES CARE OF "Y" FORCE AT NODE PT. 55 ON SEISMIC HOSGRI 4A-26, FOR LINE 1-K-3289-2 1/2

REV. 3 FOR NEW HOS. DATA SEE SHTS. 1 & 2 H.S.S. 10-5-81 SH. 3 OF 3

REV. 4. FOR NEW HOS, DE, & DL. DATA SEE SHTS 1 & 2 PH. 12-18-81

DSGN D. CARTER 1-3-80 (REV. 2)

CHKD: CHG Z. TOMSKY REV. 2 1-14-80 NO CHANGE

CHANGE 4

50 (3-80)

PROJECT. DC-#1	LINE NO. 1 K 3290 2½ C	SEQ. NO. S-804 41/31R
FILE NO: 33	SYSTEM RV SUPT. CLRS 1&2 CCW RETHDR	RESTR. Y

TYPE OF ANALYSIS	SEISMIC					
ANALYSIS NO.	4A-16	4A-16	4A-16			
REV. NO./DATE	4/12-16-81	3/10-3-81	4/12-11-81			
CASE	DE	HOS	HOS			
DATA POINT	43	43	43			
FORCE X (LB)	0	0	0			
FORCE Y (LB)	91	161	194			
FORCE Z (LB)	0	0	0			
MOMENT X (-LB)	0	0	0			
MOMENT Y (-LB)	0	0	0			
MOMENT Z (-LB)	0	0	0			
MVMT. Δ X (IN)	0.573	0.716	1.184			
MVMT. Δ Y (IN)	0	0	0			
MVMT. Δ Z (IN)	0.523	1.190	1.253			

TYPE OF ANALYSIS	THERMAL					
ANALYSIS NO.						
REV. NO./DATE						
CASE						
DATA POINT						
FORCE X (LB)						
FORCE Y (LB)						
FORCE Z (LB)						
MOMENT X (-LB)						
MOMENT Y (-LB)						
MOMENT Z (-LB)						
MVMT. X (IN)						
MVMT. Y (IN)						
MVMT. Z (IN)						

FILE COPY

TYPE OF ANALYSIS	DEAD LOAD	TRIB. PIPE WT.
ANALYSIS NO.		4A-16
REV. NO./DATE		11-10-77
DATA POINT		43
FORCE X (LB)		0
FORCE Y (LB)		73
FORCE Z (LB)		0

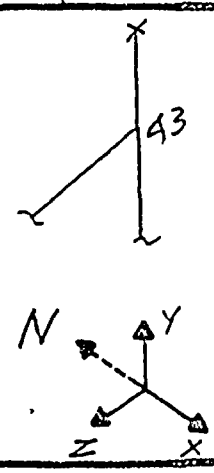

P. G. & E. CO.

REV.	DATE	DESCRIPTION OF CHANGE	BY	CHKD.
5	12-18-81	NEW 4A-16 DE & HOS, LOADS/MOVEMENTS INCREASED	PH.	
4	10-6-81	REV. HOS. ADDED T.H.	H.S.S.	PI

SH 1 OF 3 REV. 5

PROJECT. DC-#1	LINE NO. 1 K 3289 2½ C	SEQ. NO. S-804 41/3R
FILE NO. 33	SYSTEM RVSUPT CLRS 1½ CCWSUPHOR	RESTR. Y

TYPE OF ANALYSIS	SEISMIC					
ANALYSIS NO.		4A-26		4A-26		
REV. NO./DATE	/	3/10-4-81	/	4/11-23-81	/	/
CASE		HOS		HOS		
DATA POINT		48		48		
FORCE X (LB)		0		0		
FORCE Y (LB)		73		58		
FORCE Z (LB)		0		0		
MOMENT X (-LB)		0		0		
MOMENT Y (-LB)		0		0		
MOMENT Z (-LB)		0		0		
MVMT. Δ X (IN)		0.235		0.222		
MVMT. Δ Y (IN)		0		0		
MVMT. Δ Z (IN)		0.358		0.356		

TYPE OF ANALYSIS	THERMAL					
ANALYSIS NO.						
REV. NO./DATE	/	/	/	/	/	/
CASE						
DATA POINT						
FORCE X (LB)						
FORCE Y (LB)						
FORCE Z (LB)						
MOMENT X (-LB)						
MOMENT Y (-LB)						
MOMENT Z (-LB)						
MVMT. X (IN)						
MVMT. Y (IN)						
MVMT. Z (IN)						

FILE COPY

TYPE OF ANALYSIS	DEAD LOAD	TRIB. PIPE WT.
ANALYSIS NO.	4A-26	4A-26
REV. NO./DATE	1/11-23-81	/ 11-15-77
DATA POINT	48	48
FORCE X (LB)	0	0
FORCE Y (LB)	-71	71
FORCE Z (LB)	0	0

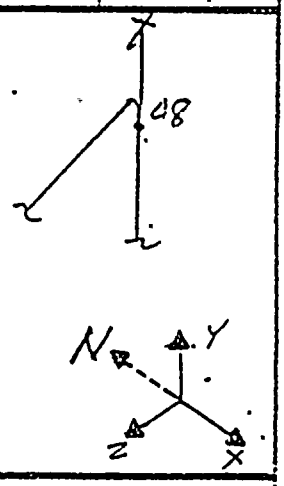

P. G. & E. CO.

REV.	DATE	DESCRIPTION OF CHANGE	BY	CHKD.
5	12-7-81	NEW 4A-26 HOSED.L. LOADS/MOVEMENTS INCREASED	P.H	C
4	10-6-81	REV. HOS, ADDED T.M.	H.SS	PI

SH 2 OF 3 REV. 5

FILE 33

41
31R

S 804

RESTRAINT & RIGID HGR. DATA

LINE NO.	1-K-3290-2½ C			1-K-3290-2½ C		
RESTRAINT DIRECTION	Y			Y		
SEIS. ANAL. NO. & DATE	~~4A-16 / 4-16-73~~			HOSGRI ANAL. ~~4A-16 / 9-12-77~~		
SEIS. DATA PT.	~~43~~			~~43~~		
SEIS. FORCE (LB)	Fx = ± 0	~~Fy = ± 98~~	Fz = ± 0	Fx = ± 0	~~Fy = ± 162~~	Fz = ± 0
SEIS. MVMT. (INCH)	~~Δx = 0.466~~	Δy = 0.00	~~Δz = 0.482~~	~~Δx = 0.717~~	Δy = 0	~~Δz = 1.207~~
THERM. ANAL. NO.& DATE	294 II / 8-20-74					
THERM. DATA PT.	80 (NORMAL)					
THERM. FORCE (LB)	Fx = 0	Fy = −11	Fz = 0	Fx =	Fy =	Fz =
THERM. MVMT. (INCH)	Δx = −0.291	Δy = 0.00	Δz = −0.402	Δx =	Δy =	Δz =
PIPE DEAD WT. ANAL. NO.& DATE		DATA PT.		FORCE (LB) FY = −87 Max. Sym		

LINE NO.	1-K-3289-2½ C			1-K-3289-2½ C		
RESTRAINT DIRECTION	Y SEISM. ONLY			Y SEISM. ONLY		
SEIS. ANAL. NO.& DATE	4A-26 / 9-15-77			HOSGRI ANAL. ~~4A-26 / 9-16-77~~		
SEIS. DATA PT.	48			~~48~~		
SEIS. FORCE (LB)	Fx = ± 0	Fy = ± 25	Fz = ± 0	Fx = ± 0	~~Fy = ± 52~~	Fz = ± 0
SEIS. MVMT. (INCH)	Δx = 0.126	Δy = 0.00	Δz = 0.210	~~Δx = 0.223~~	Δy = 0	Δz = 0.355
THERM. ANAL. NO.& DATE	66A / 8-22-74			66A / 8-22-74		
THERM. DATA PT.	295 PART I NORMAL			295 PART II ACCIDENT		
THERM. FORCE (LB)	Fx = —	Fy = NOT RUN	Fz = —	Fx = —	Fy = NOT RUN	Fz = —
THERM. MVMT. (INCH)	Δx = −0.13	Δy = −0.03	Δz = −0.15	Δx = −0.13	Δy = −0.03	Δz = −0.15
PIPE DEAD WT. (LB)	~~−87~~					

LINE NO.						
RESTRAINT DIRECTION						
SEIS. ANAL. NO.& DATE				HOSGRI ANAL.		
SEIS. DATA PT.						
SEIS. FORCE (LB)	Fx = ±	Fy = ±	Fz = ±	Fx = ±	Fy = ±	Fz = ±
SEIS. MVMT. (INCH)	Δx =	Δy =	Δz =	Δx =	Δy =	Δz =
THERM. ANAL. NO.& DATE						
THERM. DATA PT.						
THERM. FORCE (LB)	Fx =	Fy =	Fz =	Fx =	Fy =	Fz =
THERM. MVMT. (INCH)	Δx =	Δy =	Δz =	Δx =	Δy =	Δz =
MASS. ANAL. NO.& DATE		DATA PT.		Fx =	Fy =	Fz =

FILE COPY

FILE COPY

THERE WAS NOT DL SHOWN ON LINE

NO CHANGE 3289-2½

SGN L A Rodriguez 3-17-80 REV. 3

CHKD: CHG Z. TOMSKY REV. 3 5-5-80

CHANGE 5

REV. 4 FOR NEW. HOS SEE SHTS. 1 & 2 H.S.S. 10-6-81 SH. 3 OF 3

REV. 5 FOR NEW HOS, DE, & DL DATA SEE SHTS 1 & 2 PH. 12-18-81

PROJECT. DC-#1	LINE NO. 1 K 3289 2½ C	SEQ. NO. L-451
FILE NO. 33	SYSTEM RV SUPT CLRS 1 & 2 CCW SUPHDR	RESTR. Y ⊥ H

41 / 32R

YPE OF ANALYSIS	SEISMIC					
ANALYSIS NO.				4A-26	4A-26	
REV. NO./DATE	/	/	/	3/10-4-81	4/11-23-81	/
CASE				HOS	HOSGR1	
DATA POINT				42,43	42 & 43	
FORCE X H(⊥) (LB)				239	257	
FORCE Y (LB)				129	66	
FORCE Z (LB)				101	–	
MOMENT X (-LB)				0	–	
MOMENT Y (-LB)				0	–	
MOMENT Z (-LB)				0	–	
MVMT. Δ X (IN)				0.167	0.167"	
MVMT. Δ Y (IN)				0	0	
MVMT. Δ Z (IN)				0.371	0.370"	

TYPE OF ANALYSIS	THERMAL					
ANALYSIS NO.						
REV. NO./DATE	/	/	/	/	/	/
CASE						
DATA POINT						
FORCE X (LB)						
FORCE Y (LB)						
FORCE Z (LB)						
MOMENT X (-LB)						
MOMENT Y (-LB)						
MOMENT Z (-LB)						
MVMT. X (IN)						
MVMT. Y (IN)						
MVMT. Z (IN)						

FILE COPY

TYPE OF ANALYSIS	DEAD LOAD	TRIB. PIPE WT.
ANALYSIS NO.	4A-26	4A-26
REV. NO./DATE	1/11-23-81	/ 11-15-77
DATA POINT	42 & 43	42, 43
FORCE X (LB)	0	103
FORCE Y (LB)	-85	85
FORCE Z (LB)	0	47

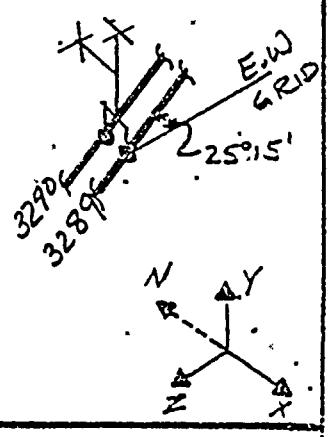

P. G. & E. CO.

REV.	DATE	DESCRIPTION OF CHANGE	BY	CHKD.
5	12-18-81	REVISED HOSGR1 & DL / MOVEMENTS INCREASED	DPJ	D.E.B.
4	10-5-81	REV. HOS. ADDED T.M.	H.S.S.	PT

SH 1 OF 3 REV. 5

150 (3-80) 7E

PROJECT. DC-#1	LINE NO. 1 K 3290 2½ C	SEQ. NO. I-451
FILE NO: 33	SYSTEM RV SUPT CLRS 1&2 CCW RET HDR	RESTR. Y1H

41 / 32R

TYPE OF ANALYSIS	SEISMIC					
ANALYSIS NO.		~~4A-16~~		4A-16	4A-16	
REV. NO./DATE		~~3/10-3-81~~		4/12-17-81	4/12-17-81	
CASE		~~HOS~~		DE	HOSGR1.	
DATA POINT		~~39~~		39	39	
FORCE X (LB)		~~0~~		–	–	
FORCE Y (LB)		~~184~~		24	86	
FORCE Z (LB)		~~0~~		–	–	
MOMENT X (-LB)		~~0~~				
MOMENT Y (-LB)		~~0~~				
MOMENT Z (-LB)		~~0~~				
MVMT. Δ X (IN)		~~1.795~~		0.805	1.870	
MVMT. Δ Y (IN)		~~0~~		0	0	
MVMT. Δ Z (IN)		~~1.912~~		0.802	1.931	

TYPE OF ANALYSIS	THERMAL					
ANALYSIS NO.						
REV. NO./DATE						
CASE						
DATA POINT						
FORCE X (LB)						
FORCE Y (LB)						
FORCE Z (LB)						
MOMENT X (-LB)						
MOMENT Y (-LB)						
MOMENT Z (-LB)						
MVMT. X (IN)						
MVMT. Y (IN)						
MVMT. Z (IN)						

FILE COPY

TYPE OF ANALYSIS	DEAD LOAD	TRIB. PIPE WT.
ANALYSIS NO.	4A-16	4A-16
REV. NO./DATE	0/12-18-81	11-10-77
DATA POINT	39	39
FORCE X (LB)	0	0
FORCE Y (LB)	-88	88
FORCE Z (LB)	0	0

SEE PG 1

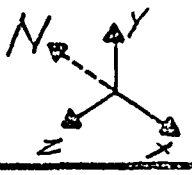

P. G. & E. CO.

REV.	DATE	DESCRIPTION OF CHANGE	BY	CHKD.
5	12-18-81	REVISED HOSGR1 AND DEAD LOAD / INCREASE	DPJ	DEB
4	10-5-81	REV. HOS. ADDED T.H.	HSS	PI

SH 2 OF 3 REV. 5

FILE 33

41
32R

I451

RESTRAINT & RIGID HGR. DATA

LINE NO.	1-K-3290-2½ C			1-K-3290-2½ C		
RESTRAINT DIRECTION	Y			Y		
SEIS. ANAL. NO. & DATE	~~4A-16 / 4-16-73~~			HOSGRI ANAL. ~~4A-16 / 9-12-77~~		
SEIS. DATA PT.	~~39~~			~~39~~		
SEIS. FORCE (LB)	Fx = ± 0	Fy = ± ~~24~~	Fz = ± 0	Fx = ± 0	Fy = ± ~~99~~	Fz = ± 0
SEIS. MVMT. (INCH)	Δx = ~~.761~~	Δy = 0.00	Δz = ~~.782~~	Δx = ~~1.819~~	Δy = 0.00	Δz = ~~1.940~~
THERM. ANAL. NO.& DATE	294 II / 8-20-74					
THERM. DATA PT.	75 NORMAL					
THERM. FORCE (LB)	Fx = 0	Fy = 17	Fz = 0	Fx =	Fy =	Fz =
THERM. MVMT. (INCH)	Δx = -0.394	Δy = 0.00	Δz = -0.275	Δx =	Δy =	Δz =
PIPE DEAD WT. ANAL. NO.& DATE	—	DATA PT.	—	FORCE (LB) ~~Fy = 84#~~ (MAX SPAN)		

LINE NO.	1-K-3289-2½ C			1-K-3289-2½ C		
RESTRAINT DIRECTION	Y & HOR 1			Y & HOR 1		
SEIS. ANAL. NO.& DATE	4A-26 / 9-15-77			HOSGRI ANAL. ~~4A-26 / 9-15-77~~		
SEIS. DATA PT.	42 & 43			~~42 & 43~~		
SEIS. FORCE (LB)	Fx = ± 138	Fy = ± 18	Fz = ± 62	Fx = ± ~~233~~	Fy = ± ~~39~~	Fz = ± ~~105~~
SEIS. MVMT. (INCH)	Δx = 0.099	Δy = 0.00	Δz = 0.22	Δx = ~~0.166~~	Δy = 0.00	Δz = ~~0.219~~
THERM. ANAL. NO.& DATE	66A / 8-22-74			66A / 8-22-74		
THERM. DATA PT.	296 NORMAL			296 ACCIDENT		
THERM. FORCE (LB)	Fx = 0	Fy = 4	Fz = 0	Fx = 0	Fy = 4	Fz = 0
THERM. MVMT. (INCH)	Δx = -0.163	Δy = 0.00	Δz = -0.100	Δx = -0.163	Δy = 0.00	Δz = -0.100
PIPE DEAD WT. (LB)	~~FY = -84# (MAX SPAN)~~					

LINE NO.						
RESTRAINT DIRECTION						
SEIS. ANAL. NO.& DATE				HOSGRI ANAL.		
SEIS. DATA PT.						
SEIS. FORCE (LB)	Fx = ±	Fy = ±	Fz = ±	Fx = ±	Fy = ±	Fz = ±
SEIS. MVMT. (INCH)	Δx =	Δy =	Δz =	Δx =	Δy =	Δz =
THERM. ANAL. NO.& DATE						
THERM. DATA PT.						
THERM. FORCE (LB)	Fx =	Fy =	Fz =	Fx =	Fy =	Fz =
THERM. MVMT. (INCH)	Δx =	Δy =	Δz =	Δx =	Δy =	Δz =
MASS. ANAL. NO.& DATE	—	DATA PT.		Fx =	Fy =	Fz =

FILE COPY

FILE COPY

NO CHANGES

DSGN LA Rodriguez 3-17-80
Rev. 3 g

CHKD. CHG 3 S. Widjaja 5-8-80

CHANGE 5

REV. 4 FOR NEW HOS. SEE SH. 1 & 2 H.S.S 10-5-81 SH. 3 OF 3

PROJECT. DC-#1	LINE NO. 11 K 3289 2½ C	SEQ. NO. I-450 41
FILE NO: 33	SYSTEM RV SUPT CLRS 1&2 CCW SUP HDR	RESTR. Y. AHA 33R

TYPE OF ANALYSIS	SEISMIC					
ANALYSIS NO.		4A-26	4A-26			
REV. NO./DATE		3/10-4-81	4/11-23-81			
CASE		HOS	HOSGR1			
DATA POINT		32, 34	32 & 34			
FORCE X AXIAL (LB)		105	122			
FORCE Y (LB)		199	74			
FORCE Z (LB)		106	—			
MOMENT X (-LB)		0	—			
MOMENT Y (-LB)		0	—			
MOMENT Z (-LB)		0	—			
MVMT. Δ X (IN)		0.837	0.837"			
MVMT. Δ Y (IN)		0	0			
MVMT. Δ Z (IN)		0.823	0.822"			

TYPE OF ANALYSIS	THERMAL					
ANALYSIS NO.						
REV. NO./DATE						
CASE						
DATA POINT						
FORCE X (LB)						
FORCE Y (LB)						
FORCE Z (LB)						
MOMENT X (-LB)						
MOMENT Y (-LB)						
MOMENT Z (-LB)						
MVMT. X (IN)						
MVMT. Y (IN)						
MVMT. Z (IN)						

FILE COPY

TYPE OF ANALYSIS	DEAD LOAD	TRIB. PIPE WT.
ANALYSIS NO.	4A-26	4A-26
REV. NO./DATE	11-23-81	11-15-77
DATA POINT	32 & 34	32, 34
FORCE X (LB)	-32	180
FORCE Y (LB)	-85	85
FORCE Z (LB)	-33	183

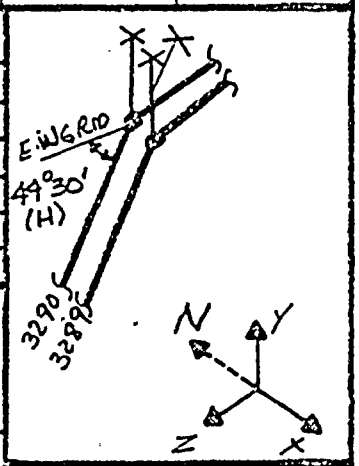

P. G. & E. CO.

REV.	DATE	DESCRIPTION OF CHANGE	BY	CHKD.	SH 1 OF 3	REV.
4	12-18-81	REVISED HOSGR1 & DL MVMT INCREASED	DPJ	D.E.B.		4
3	10-5-81	REV. HOS. ADDED T.H.	H.S.S.	PI		

150 (3-80)

PROJECT. DC-#1	LINE NO. 11 K 3290 2½ C	SEQ. NO. I-450
FILE NO. 33	SYSTEM RV SUPT CLRS 1&2 CCW RET HDR	RESTR. Y

41 / 33B

TYPE OF ANALYSIS	SEISMIC					
ANALYSIS NO.		4A-16		4A-16	4A-16	
REV. NO./DATE		8/10-3-81		4/12-17-81	4/12-17-81	
CASE		HOS		DE	HOSGRI	
DATA POINT		32		32	32	
FORCE X (LB)		0		–	–	
FORCE Y (LB)		12		17	108	
FORCE Z (LB)		0		–	–	
MOMENT X (in-LB)		0				
MOMENT Y (in-LB)		0				
MOMENT Z (in-LB)		0				
MVMT. ΔX (IN)		2.079		0.857	2.053	
MVMT. ΔY (IN)		0		0	0	
MVMT. ΔZ (IN)		2.040		0.842	2.017	

TYPE OF ANALYSIS	THERMAL					
ANALYSIS NO.						
REV. NO./DATE						
CASE						
DATA POINT						
FORCE X (LB)						
FORCE Y (LB)						
FORCE Z (LB)						
MOMENT X (-LB)						
MOMENT Y (-LB)						
MOMENT Z (-LB)						
MVMT. X (IN)						
MVMT. Y (IN)						
MVMT. Z (IN)						

FILE COPY

TYPE OF ANALYSIS	DEAD LOAD	TRIB. PIPE WT.
ANALYSIS NO.	4A-16	4A-16
REV. NO./DATE	0/12-18-81	11-10-77
DATA POINT	32	32
FORCE X (LB)	–	0
FORCE Y (LB)	-93	93
FORCE Z (LB)	–	0

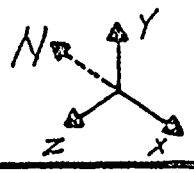

P. G. & E. CO.

REV.	DATE	DESCRIPTION OF CHANGE	BY	CHKD.
4	12-18-81	REVISED HOSGRI & DEAD LOAD INCREASE	DRI	D.E.B.
3	10-5-81	REV. HOS. ADDED T.M.	HSS	PI

SH 2 OF 3 REV. 4

FILE 33

41
33R

I 450

RESTRAINT & RIGID HGR. DATA

LINE NO.	1-K-3290-2½ C			1-K-3290-2½ C		
RESTRAINT DIRECTION	Y			Y		
SEIS. ANAL. NO. & DATE	~~4A-16 / 4-16-73~~			HOSGRI ANAL. 4A-16/9-12-77		
SEIS. DATA PT.	~~32~~			~~32~~		
SEIS. FORCE (LB)	Fx = ± 0	Fy = ± 13	Fz = ± 0	Fx = ± 0	Fy = ± 121	Fz = ± 0
SEIS. MVMT. (INCH)	Δx = 0.853	Δy = 0.00	Δz = 0.838	Δx = 2.107	Δy = 0.00	Δz = 2.07
THERM. ANAL. NO.& DATE	294 II / 8-20-74					
THERM. DATA PT.	68 NORMAL					
THERM. FORCE (LB)	Fx = 0	Fy = −2	Fz = 0	Fx =	Fy =	Fz =
THERM. MVMT. (INCH)	Δx = −0.310	Δy = 0.00	Δz = −0.182	Δx =	Δy =	Δz =
PIPE DEAD WT. ANAL. NO.& DATE	—	DATA PT.	—	FORCE (LB) ~~Fy = 84#~~ (MAX SPAN)		

LINE NO.	1-K-3289-2½ C			1-K-3289-2½ C		
RESTRAINT DIRECTION	Y & AXIAL			Y & AXIAL		
SEIS. ANAL. NO.& DATE	4A-26 / 9-15-77			HOSGRI ANAL. 4A-26/9-12-77		
SEIS. DATA PT.	32 & 34			~~32 & 34~~		
SEIS. FORCE (LB)	Fx = ± 48	Fy = ± 17	Fz = ± 49	Fx = ± 85	Fy = ± 35	Fz = ± 36
SEIS. MVMT. (INCH)	Δx = 0.497	Δy = 0.00	Δz = 0.488	Δx = 2.034	Δy = 0.00	Δz = 2.019
THERM. ANAL. NO.& DATE	66 A 8-22-74			66 A 8-22-74		
THERM. DATA PT.	298 NORMAL			298 ACCIDENT		
THERM. FORCE (LB)	Fx = 0	Fy = 5	Fz = 0	Fx = 0	Fy = 5	Fz = 0
THERM. MVMT. (INCH)	Δx = −0.105	Δy = 0.00	Δz = −0.077	Δx = −0.105	Δy = 0.00	Δz = −0.077
PIPE DEAD WT. (LB)	~~Fy = −84# (MAX SPAN)~~					

LINE NO.						
RESTRAINT DIRECTION						
SEIS. ANAL. NO.& DATE				HOSGRI ANAL.		
SEIS. DATA PT.						
SEIS. FORCE (LB)	Fx = ±	Fy = ±	Fz = ±	Fx = ±	Fy = ±	Fz = ±
SEIS. MVMT. (INCH)	Δx =	Δy =	Δz =	Δx =	Δy =	Δz =
THERM. ANAL. NO.& DATE						
THERM. DATA PT.						
THERM. FORCE (LB)	Fx =	Fy =	Fz =	Fx =	Fy =	Fz =
THERM. MVMT. (INCH)	Δx =	Δy =	Δz =	Δx =	Δy =	Δz =
MASS. ANAL. NO.& DATE		DATA PT.		Fx =	Fy =	Fz =

FILE COPY

REV. 2 NO CHANGES

DSGN LA Rodriguez 3-17-80
REV. 2

CHKD: CHG 2 S Widjaja 5-8-80

CHANGE 4

REV. 3 FOR NEW HOS SEE SHTS. 1 & 2 H.S.S. 10-5-81

SH. 3 OF 3

PROJECT. DC-#1	LINE NO. 1 K 3289 2½ C	SEQ. NO. L-123
FILE NO: 33	SYSTEM RY SUPT CLRS 1&2 CCW SUP HDR	RESTR. Y.1H

41 / 35R

TYPE OF ANALYSIS	SEISMIC					
ANALYSIS NO.		4A-26	4A-26			
REV. NO./DATE		3/10-3-81	4/11-23-81			
CASE		HOS.	HOSGR1			
DATA POINT		16, 18	16, 18			
FORCE ΣH(L) (LB)		303	416			
FORCE Y (LB)		248	164			
FORCE Z (LB)		288	–			
MOMENT X (-LB)		0	–			
MOMENT Y (-LB)		0	–			
MOMENT Z (-LB)		0	–			
MVMT. X (IN)		0	0.0			
MVMT. Y (IN)		0	0.0			
MVMT. Z (IN)		0	0.0			

TYPE OF ANALYSIS	THERMAL					
ANALYSIS NO.						
REV. NO./DATE						
CASE						
DATA POINT						
FORCE X (LB)						
FORCE Y (LB)						
FORCE Z (LB)						
MOMENT X (-LB)						
MOMENT Y (-LB)						
MOMENT Z (-LB)						
MVMT. X (IN)						
MVMT. Y (IN)						
MVMT. Z (IN)						

FILE COPY

TYPE OF ANALYSIS	DEAD LOAD	TRIB. PIPE WT.
ANALYSIS NO.	4A-26	4A-26
REV. NO./DATE	1/11-23-81	11-15-77
DATA POINT	16	16, 18
FORCE X (LB)	–	226
FORCE Y (LB)	-127	127
FORCE Z (LB)	–	222

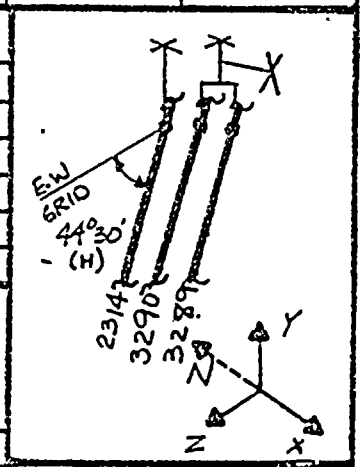

P. G. & E. CO.

REV.	DATE	DESCRIPTION OF CHANGE	BY	CHKD.
6	12-18-81	REVISED HOSGR1 & DEAD LOAD/INCREASE	DPI	DEB
5	10-5-81	REV. HOS. ADDED T.M.	HGS	PI

SH 1 OF 4 REV. 6

FILE 33

41
35R

I 123

RESTRAINT & RIGID HGR. DATA

LINE NO.	1-K17-2314-3 C			1-K17-2314-3 C		
RESTRAINT DIRECTION	Y			Y		
SEIS. ANAL. NO. & DATE	4A-23 / 6-28-74			HOSGRI 4A-23 / 8-29-77		
SEIS. DATA PT.	31			31		
SEIS. FORCE (LB)	Fx = ± 0	Fy = ± 463	Fz = ± 0	Fx = ± 0	Fy = ± 1325	Fz = ± 0
SEIS. MVMT. (INCH)	Δx = 1.288	Δy = 0.00	Δz = 1.243	Δx = 2.444	Δy = 0.00	Δz = 1.845
THERM. ANAL. NO.& DATE	292 B / 5-24-73			292 B & 292"B" (II & III)		
THERM. DATA PT.	21 I (ACCIDENT 1%)			5-24-73 & 6-20-74 PT. 21 (NORM)		
THERM. FORCE (LB)	Fx = 0	Fy = -312	Fz = 0	Fx = 0	Fy = -150	Fz = 0
THERM. MVMT. (INCH)	Δx = -3.127	Δy = 0.00	Δz = 0.208	Δx = -1.757	Δy = 0.00	Δz = 0.602
PIPE DEAD WT. ANAL. NO.& DATE			DATA PT.	FORCE (LB) -200		

LINE NO.	1-K-3290-2½ C			1-K-3290-2½ C		
RESTRAINT DIRECTION	Y & HOR ⊥			Y & HOR ⊥		
SEIS. ANAL. NO.& DATE	4A-16 / 4-16-73			HOSGRI 4A-16 / 9-12-77		
SEIS. DATA PT.	19 & 20			19 & 20		
SEIS. FORCE (LB)	Fx = ± 124	Fy = ± 20	Fz = ± 121	Fx = ± 276	Fy = ± 73	Fz = ± 271
SEIS. MVMT. (INCH)	Δx = 0.00	Δy = 0.00	Δz = 0.00	Δx = 0.00	Δy = 0.00	Δz = 0.00
THERM. ANAL. NO.& DATE	294E II / 8-20-74					
THERM. DATA PT.	55 & 60 (NORMAL)					
THERM. FORCE (LB)	Fx = -38	Fy = -9	Fz = 37	Fx =	Fy =	Fz =
THERM. MVMT. (INCH)	Δx = -0.161	Δy = 0.00	Δz = -0.165	Δx =	Δy =	Δz =
PIPE DEAD WT. (LB)	Fy = -84					

LINE NO.	1-K-3289-2½ C			1-K-3289-2½ C		
RESTRAINT DIRECTION	Y & HOR ⊥			Y & HOR ⊥		
SEIS. ANAL. NO.& DATE	4A-26 / 9-15-77			HOSGRI 4A-26 / 9-16-77		
SEIS. DATA PT.	16 & 18			16 & 18		
SEIS. FORCE (LB)	Fx = ± 171	Fy = ± 36	Fz = ± 168	Fx = ± 296	Fy = ± 157	Fz = ± 291
SEIS. MVMT. (INCH)	Δx = 0.00	Δy = 0.00	Δz = 0.00	Δx = 0.00	Δy = 0.00	Δz = 0.00
THERM. ANAL. NO.& DATE	66A / 8-22-74			66A / 8-22-74		
THERM. DATA PT.	300 & 303 (NORMAL)			300 & 303 (ACC & TEST)		
THERM. FORCE (LB)	Fx = -268	Fy = -234	Fz = 268	Fx = -267	Fy = -233	Fz = 267
THERM. MVMT. (INCH)	Δx = -0.06	Δy = 0.00	Δz = -0.06	Δx = -0.06	Δy = 0.00	Δz = -0.06
MASS. ANAL. NO.& DATE	Fy = -84		DATA PT.	Fx =	Fy =	Fz =

FILE COPY

REV.6 "INCREASE"
REV.4 "No Change"

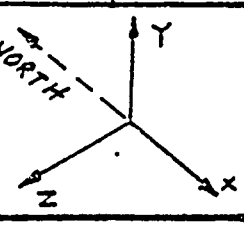

DSGN L.A. Rodriguez 3-6-80
REV. 3

CHKD: CHG 3 F. Wu 4-3-80

CHANGE 6

REV. 4 REVISED DATA FOR LINE 2314-3 SEE SH. 2
REV. 5 FOR NEW HOS DATA SEE SH. 3 & 4 H.S.S. 10-5-81

SH. 2 OF 4

76-1450 (3-80)

PROJECT. DC #1	LINE NO. 1 K17 2314 3 C	SEQ. NO. I123 41 35R
FILE NO: 33	SYSTEM CCW RETURN HDR. FROM RCPP	RESTR. Y

TYPE OF ANALYSIS	SEISMIC					
ANALYSIS NO.	4A-23	4A-23	4A-23			
REV. NO./DATE	7/8-18-80	7/8-18-80	8/11-30-81			
CASE	DE	HOSGR1	HOSGR1			
DATA POINT	31	31	31			
FORCE X (LB)	0	0	–			
FORCE Y (LB)	579	1201	1125			
FORCE Z (LB)	0	0	–			
MOMENT X (-LB)	–	–				
MOMENT Y (-LB)	–	–				
MOMENT Z (-LB)	–	–				
MVMT. ΔX (IN)	0.384	0.798	0.819			
MVMT. ΔY (IN)	0.00	0.00	0			
MVMT. ΔZ (IN)	0.354	0.733	0.776			

FILE COPY

TYPE OF ANALYSIS	THERMAL					
ANALYSIS NO.	292B	292B	292B			
REV. NO./DATE	5-24-73	6-20-74	5-24-73			
CASE	1% ACCID.	NORM. OPER	ACCIDENT			
DATA POINT	21 (I)	21 (II)	21 (III)			
FORCE X (LB)	–	–	–			
FORCE Y (LB)	-312	-150	-150			
FORCE Z (LB)	–	–	–			
MOMENT (-LB)	–	–	–			
MOMENT (-LB)	–	–	–			
MOMENT (-LB)	–	–	–			
MVMT. X (IN)	-3.127	-1.757	-1.757			
MVMT. Y (IN)	0.0	0.0	0.0			
MVMT. Z (IN)	0.208	0.602	0.602			

TYPE OF ANALYSIS	DEAD LOAD	TRIB. PIPE WT.
ANALYSIS NO.	4A-23	4A-23
REV. NO./DATE	Y12-4-81	7/8-18-80
DATA POINT	31	31
FORCE X (LB)	–	0
FORCE Y (LB)	-193	362
FORCE Z (LB)	–	0

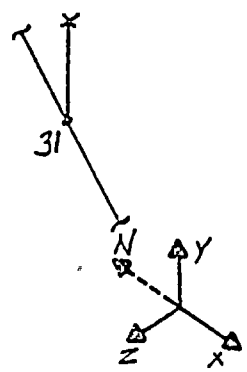

REV.	DATE	DESCRIPTION OF CHANGE	BY	CHKD.
6	12-18-81	REVISED HOSGR1 & DEAD LOAD	DPJ	D.E.B.
5	10-5-81	NO CHANGE ON THIS SH.	H.S.S.	P.I.
4	8-25-80	REVISED DE, HOS., ADDED TRIB. PIPE WT.	Z.T.	JCC

P. G. & E. CO.

049253 6

SH 3 OF 4 REV.

PROJECT. DC-#1	LINE NO. 1 K 3290 2½ C	SEQ. NO. L-123
FILE NO: 33	SYSTEM RV SUPT. CLRS 1&2 CCW RET HDR	RESTR. Y, LH

4H / 35R

TYPE OF ANALYSIS	SEISMIC					
ANALYSIS NO.		4A-16		4A-16	4A-16	
REV. NO./DATE		3/10-4-81		4/12-17-81	4/12-17-81	
CASE		HOS		DE	HOS&R1	
DATA POINT		19,20		19&20	19&20	
FORCE X (LB)		274		124	268	
FORCE Y (LB)		95		20	63	
FORCE Z (LB)		269		122	263	
MOMENT X (in-LB)		0		–	–	
MOMENT Y (in-LB)		0		–	–	
MOMENT Z (in-LB)		0		–	–	
MVMT. Δ X (IN)		0.001		0.0	0.0	
MVMT. Δ Y (IN)		0		0.0	0.0	
MVMT. Δ Z (IN)		0.001		0.0	0.0	

TYPE OF ANALYSIS	THERMAL					
ANALYSIS NO.						
REV. NO./DATE						
CASE						
DATA POINT						
FORCE X (LB)						
FORCE Y (LB)						
FORCE Z (LB)						
MOMENT X (-LB)						
MOMENT Y (-LB)						
MOMENT Z (-LB)						
MVMT. X (IN)						
MVMT. Y (IN)						
MVMT. Z (IN)						

FILE COPY

TYPE OF ANALYSIS	DEAD LOAD	TRIB. PIPE WT.
ANALYSIS NO.	4A-16	4A-16
REV. NO./DATE	0/12-18-81	11-10-77
DATA POINT	19&20	19,20
FORCE X (LB)	0	156
FORCE Y (LB)	-91	91
FORCE Z (LB)	0	153

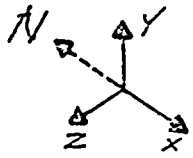

P. G. & E. CO.

REV.	DATE	DESCRIPTION OF CHANGE	BY	CHKD.
6	12-18-81	ADDED HOS. & D.L.	DPJ	D.F.B.
5	10-5-81	REV. HOS. ADDED T.M.	HGS	PI

SH 4 OF 4 REV. 6

(3-80) 7E

PROJECT. DC-#1	LINE NO. 1 K 2297 6 C	SEQ. NO. S-382
FILE NO. 33	SYSTEM RCP 1 CCW SUP HEADER	RESTR. Y ⊥(H) 41 / 36R

TYPE OF ANALYSIS	SEISMIC					
ANALYSIS NO.	4A-26		4A-26	4A-26		
REV. NO./DATE	2/9-15-77	/	3/10-4-81	4/11-23-81	/	/
CASE	D.E		HOS	HOSGR1		
DATA POINT	6		6	6		
FORCE X ⊥(H) (LB)	48		21	33		
FORCE Y (LB)	108		232	187		
FORCE Z (LB)				–		
MOMENT X (-LB)			0	–		
MOMENT Y (-LB)			0	–		
MOMENT Z (-LB)			0	–		
MVMT. Δ X (IN)	0.001		0.003	0.003"		
MVMT. Δ Y (IN)	0		0	0		
MVMT. Δ Z (IN)	0.001		0.004	0.003"		

TYPE OF ANALYSIS	THERMAL					
ANALYSIS NO.	06	06				
REV. NO./DATE	A/8-22-74	A/8-22-74	/	/	/	/
CASE	NORM	ACCID.				
DATA POINT	273.275	273.275				
FORCE X (LB)	-478	-478				
FORCE Y (LB)	712	712				
FORCE Z (LB)	-478	-478				
MOMENT X (-LB)	0	0				
MOMENT Y (-LB)	0	0				
MOMENT Z (-LB)	0	0				
MVMT. Δ X (IN)	-0.014	-0.014				
MVMT. Δ Y (IN)	0	0				
MVMT. Δ Z (IN)	0.014	0.014				

FILE COPY

TYPE OF ANALYSIS	DEAD LOAD		TRIB. PIPE WT.
ANALYSIS NO.		4A-26	4A-26
REV. NO./DATE		1/11-23-81	/ 11-15-77
DATA POINT		6	6
FORCE X ⊥(H) (LB)			246
FORCE Y (LB)	-493 MAX SPAN	-442	442
FORCE Z (LB)			0

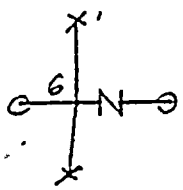

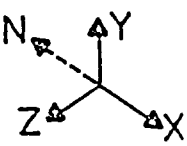

P. G. & E. CO.

REV.	DATE	DESCRIPTION OF CHANGE	BY	CHKD.
5	11-30-81	ADDED HOS. & D.L. LOADS/MOVEMENT INCREASED	D.E.B.	DPJ
4	10-2-81	REV. HOS & NEW FORMAT; ADDED TRIB. WT.	H.S.S.	PI

SH 1 OF 1 REV. 5

PROJECT. DC #1	LINE NO. 1 K17 2314 3 C	SEQ. NO. S544
FILE NO: 33	SYSTEM CCW RETURN HDR. FROM RC.PP	RESTR. Y, HL

41 / 37R

TYPE OF ANALYSIS	SEISMIC					
ANALYSIS NO.	4A-23	4A-23		4A-23	4A-23	
REV. NO./DATE	7/8-18-80	7/8-18-80		7/8-18-80	7/8-18-80	
CASE	DE	HOSGRI		DE	HOSGRI	
DATA POINT	25(Y)	25(Y)		23,24(HL)	23,24(HL)	
FORCE X (LB)	0	0		238	337	
FORCE Y (LB)	145	418		0	0	
FORCE Z (LB)	0	0		492	698	
MOMENT X(-LB)	0	0		0	0	
MOMENT Y(-LB)	0	0		0	0	
MOMENT Z(-LB)	0	0		0	0	
MVMT. X (IN)	0.074	0.100		0.072	0.097	
MVMT. Y (IN)	0.00	0.00		0.001	0.001	
MVMT. Z (IN)	0.032	0.043		0.035	0.047	

TYPE OF ANALYSIS	THERMAL					
ANALYSIS NO.	292	292	292	292	292	292
REV. NO./DATE	B/5-24-73	B/5-24-73	B/6-20-74	B/5-24-73	B/5-24-73	B/6-20-74
CASE	1% ACCID.	NORM. OPER.	ACCIDENT	1% ACCID.	NORM. OPER.	ACCIDENT
DATA POINT	24(Y)	24 (Y)	24 (Y)	J 24 (HL)	J 24 (HL)	J 24 (HL)
FORCE X (LB)	0	0	0	-151	-92	-92
FORCE Y (LB)	55	23	23	0	0	0
FORCE Z (LB)	0	0	0	310	189	189
MOMENT X(-LB)	0	0	0	0	0	0
MOMENT Y(-LB)	0	0	0	0	0	0
MOMENT Z(-LB)	0	0	0	0	0	0
MVMT. X (IN)	-1.60	-0.663	-0.663	0.00	0.00	0.00
MVMT. Y (IN)	0.00	0.00	-0.00	0.00	0.00	0.00
MVMT. Z (IN)	-0.77	-0.322	-0.322	0.00	0.00	0.00

TYPE OF ANALYSIS	DEAD LOAD	TRIB. PIPE WT.
ANALYSIS NO.		4A-23
REV. NO./DATE		7/8-18-80
DATA POINT		24, 25
FORCE X (LB)		232
FORCE Y (LB)	-200 (MAX. SPAN)	214
FORCE Z (LB)		480

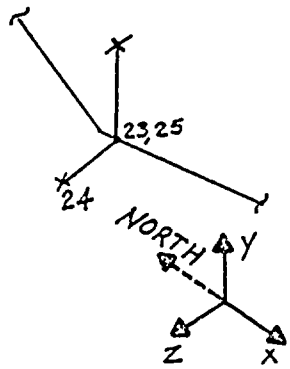

FILE COPY

REV.	DATE	DESCRIPTION OF CHANGE	BY	CHKD.
6	12-18-81	REVISED HOSGRI & D.L INCREASED	DPJ	DEB
5	10-6-81	NO CHANGE ON THIS SH.	H.S.S.	P.I.
4	9-2-80	REVISED DE, HOS. DATA, ADDED TRIB. PIPE WT.	Z.T.	JCC

P. G. & E. CO.

049253 | SH 2 OF 5 | REV. 6

PROJECT. VC-#1	LINE NO. 1 K 2303 A C	SEQ. NO. S-544
FILE NO: 33	SYSTEM RCP 1 MTR UP BRG CLR CCW RET	RESTR. Y.1(#)

41 / 37R

TYPE OF ANALYSIS	SEISMIC					
ANALYSIS NO.		4A-16		4A-16	4A-16	
REV. NO./DATE		3/10-2-81		4/12-17-81	4/12-17-81	
CASE		HOS		DE	HOSGRI	
DATA POINT		6.7		6.7	6.7	
FORCE X (LB)		49		21	45	
FORCE Y (LB)		95		37	119	
FORCE Z (LB)		100		44	93	
MOMENT X (-LB)		0		–		
MOMENT Y (-LB)		0		–		
MOMENT Z (-LB)		0		–		
MVMT. Δ X (IN)		0		0.0	0.0	
MVMT. Δ Y (IN)		0		0.0	0.0	
MVMT. Δ Z (IN)		0		0.0	0.0	

TYPE OF ANALYSIS	THERMAL					
ANALYSIS NO.						
REV. NO./DATE						
CASE						
DATA POINT						
FORCE X (LB)						
FORCE Y (LB)						
FORCE Z (LB)						
MOMENT X (-LB)						
MOMENT Y (-LB)						
MOMENT Z (-LB)						
MVMT. X (IN)						
MVMT. Y (IN)						
MVMT. Z (IN)						

COPY

TYPE OF ANALYSIS	DEAD LOAD	TRIB. PIPE WT.
ANALYSIS NO.	4A-16	4A-16
REV. NO./DATE	9/12-18-81	11-10-77
DATA POINT	6.7	6.7
FORCE X (LB)	-3	139
FORCE Y (LB)	-158	157
FORCE Z (LB)	6	286

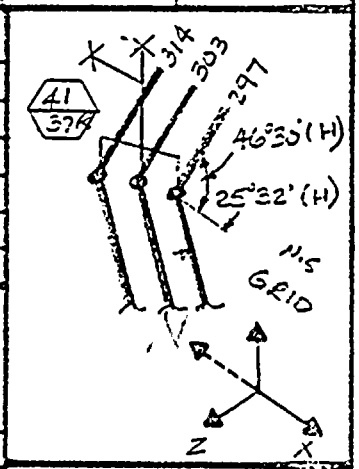

P. G. & E. CO.

REV.	DATE	DESCRIPTION OF CHANGE	BY	CHKD.
4	12-18-81	[illegible] LOADS INCREASED	DPJ	DEB
5	10-6-81	[illegible] ADDED T.M.	[illegible]	PI.

SH 1 OF 5 REV. 6

76-14 (3-80)

PROJECT. DC# 1	LINE NO. 1 K17 2314 3 C	SEQ. NO. S-544 41
FILE NO: 33	SYSTEM CCW RET. HDR. FROM RCP P.P.	RESTR. Y H L 37R

TYPE OF ANALYSIS	SEISMIC					
ANALYSIS NO.			4A-23			
REV. NO./DATE			8/11-30-81			
CASE			HOSGR1			
DATA POINT			24 & 25			
FORCE X (LB)			329			
FORCE Y (LB)			355			
FORCE Z (LB)			681			
MOMENT X (-LB)						
MOMENT Y (-LB)						
MOMENT Z (-LB)						
MVMT. X (IN)			0.103			
MVMT. Y (IN)			0			
MVMT. Z (IN)			0.043			

TYPE OF ANALYSIS	THERMAL					
ANALYSIS NO.						
REV. NO./DATE						
CASE						
DATA POINT						
FORCE X (LB)						
FORCE Y (LB)						
FORCE Z (LB)						
MOMENT X (-LB)						
MOMENT Y (-LB)						
MOMENT Z (-LB)						
MVMT. X (IN)						
MVMT. Y (IN)						
MVMT. Z (IN)						

TYPE OF ANALYSIS	DEAD LOAD	TRIB. PIPE WT.
ANALYSIS NO.	4A-23	
REV. NO./DATE	1/12-4-81	
DATA POINT	24 & 25	
FORCE X (LB)	-8	
FORCE Y (LB)	-223	
FORCE Z (LB)	16	

SEE SHT 1

P. G. & E. CO.

REV.	DATE	DESCRIPTION OF CHANGE	BY	CHKD.
6	12-18-81	REVISED HOSGR1 & D.L	DPJ	DEB

SH. 3 OF 5 REV. 6

(3-80)

PROJECT. DC-#1	LINE NO. 1 K 2297 6 C	SEQ. NO. S-544
FILE NO. 33	SYSTEM RCP 1 CCW SUP HEADER	RESTR. Y, ⊥(H)

4H / 37R

TYPE OF ANALYSIS	SEISMIC					
ANALYSIS NO.		4A-26	4A-26			
REV. NO./DATE		3/10-4-81	4/11-23-81			
CASE		HOS	HOSGR1			
DATA POINT		17, 19	17 & 19			
FORCE H(⊥) (LB)		67	107			
FORCE Y (LB)		89	51			
FORCE Z (LB)		96	-			
MOMENT X (-LB)		10	-			
MOMENT Y (-LB)		10	-			
MOMENT Z (-LB)		0	-			
MVMT. Δ X (IN)		0	0.0			
MVMT. Δ Y (IN)		0	0.0			
MVMT. Δ Z (IN)		0	0.0			

TYPE OF ANALYSIS	THERMAL					
ANALYSIS NO.						
REV. NO./DATE						
CASE						
DATA POINT						
FORCE X (LB)						
FORCE Y (LB)						
FORCE Z (LB)						
MOMENT X (-LB)						
MOMENT Y (-LB)						
MOMENT Z (-LB)						
MVMT. X (IN)						
MVMT. Y (IN)						
MVMT. Z (IN)						

FILE COPY

TYPE OF ANALYSIS	DEAD LOAD	TRIB. PIPE WT.
ANALYSIS NO.	4A-26	4A-26
REV. NO./DATE	1/11-23-81	11-15-77
DATA POINT	17, 19	17, 19
FORCE X (LB)	7	168
FORCE Y (LB)	-279	279
FORCE Z (LB)	-10	240

SEE SHT 1

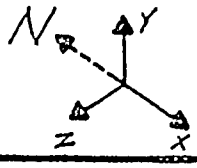

P. G. & E. CO.

REV.	DATE	DESCRIPTION OF CHANGE	BY	CHKD.
6	12-18-81	ADDED HOSGR1 & D.L	DPJ	DEB
5	10-6-81	REV. HOS., ADDED T.M.	H.S	PI

SH 4 OF 5 — REV. 6

FILE 33

41
37R

5544

RESTRAINT & RIGID HGR. DATA

LINE NO.	1-K-2303-4 C			1-K-2303-4 C		
RESTRAINT DIRECTION	Y & HOR ⊥			Y & HOR ⊥		
SEIS. ANAL. NO. & DATE	~~4A-16 / 4-16-73~~			HOSGRI ANAL. 4A-16 / 9-12-77		
SEIS. DATA PT.	~~6 & 7~~			~~6 & 7~~		
SEIS. FORCE (LB)	Fx = ± 23	Fy = ± 39	Fz = ± 47	Fx = ± 49	Fy = ± 96	Fz = ± 100
SEIS. MVMT. (INCH)	Δx = 0.00	Δy = 0.00	Δz = 0.00	Δx = 0.00	Δy = 0.00	Δz = 0.00
THERM. ANAL. NO.& DATE	294 II / 8-20-74					
THERM. DATA PT.	10 & 15					
THERM. FORCE (LB)	Fx = -142	Fy = -138	Fz = 308			
THERM. MVMT. (INCH)	Δx = -.106	Δy = 0.00	Δz = -.049			
PIPE DEAD WT. (LB)	~~FY = -214 * (MAX SPAN)~~					

LINE NO.	1-K-2297-6 C			1-K-2297-6 C		
RESTRAINT DIRECTION	Y & HOR ⊥			Y & HOR ⊥		
SEIS. ANAL. NO.& DATE	4A-26 / 9-15-77			HOSGRI ANAL. 4A-26 / 9-14-77		
SEIS. DATA PT.	17 & 19			17 & 19		
SEIS. FORCE (LB)	Fx = ± 39	Fy = ± 35	Fz = ± 55	Fx = ± 59	Fy = ± 42	Fz = ± 84
SEIS. MVMT. (INCH)	Δx = 0.00	Δy = 0.00	Δz = 0.00	Δx = 0.00	Δy = 0.00	Δz = 0.00
THERM. ANAL. NO.& DATE	66A / 8-22-74			66A / 8-22-74		
THERM. DATA PT.	255 & 257 (NORMAL)			255, 257 (ACCIDENT)		
THERM. FORCE (LB)	Fx = -139	Fy = -205	Fz = 289	Fx = -139	FY = -208	Fz = 290
THERM. MVMT. (INCH)	Δx = -.033	Δy = 0.00	Δz = -.016	Δx = -.033	ΔY = 0.00	Δz = -.016
PIPE DEAD WT. (LB)	~~FY = -493 * (MAX SPAN)~~					

LINE NO.						
RESTRAINT DIRECTION						
SEIS. ANAL. NO.& DATE				HOSGRI ANAL.		
SEIS. DATA PT.						
SEIS. FORCE (LB)	Fx = ±	Fy = ±	Fz = ±	Fx = ±	Fy = ±	Fz = ±
SEIS. MVMT. (INCH)	Δx =	Δy =	Δz =	Δx =	Δy =	Δz =
THERM. ANAL. NO.& DATE						
THERM. DATA PT.						
THERM. FORCE (LB)	Fx =	Fy =	Fz =			
THERM. MVMT. (INCH)	Δx =	Δy =	Δz =			
PIPE DEAD WT. (LB)						

COPY

FILE COPY

REV. 4 NO CHANGE ON THIS PAGE

DSGN LA Rodriguez 2-22-80 CHKD: CHG 3 Swidjaja 3-8-80

Rev. 3

CHANGE 6

REV. 5 FOR NEW HOS DATA. H.S.S. 10-6-81

SH. 5 OF 5.

PROJECT. DC-#1	LINE NO. 1 K 2297 6 C	SEQ. NO. A-141	41 / 39A
FILE NO. 33	SYSTEM RCP CCW SUP HDR	RESTR. AXIAL Y, ⊥H	

TYPE OF ANALYSIS	SEISMIC					
ANALYSIS NO.	4A-26	4A-26	4A-26	4A-26	4A-26	
REV. NO./DATE	/9-15-77	/9-15-77	3/10-3-81	/9-15-77	/9-15-77	/
CASE	DE	DE	HOS	HOS	HOS	
DATA POINT	25 (X,Y)	25 (Z,Y)	25	25 (CASE 1)	25 (CASE 2)	
FORCE FX (LB)	42	86	129	61	120	CONTINUED ON SH. 2 OF 5
FORCE FY (LB)	37	32	85	54	46	
FORCE FZ (LB)	39	71	120	59	110	
MOMENT X (-LB)	0	0	0	0	0	
MOMENT Y (-LB)	0	0	0	0	0	
MOMENT Z (-LB)	0	0	0	0	0	
MVMT. Δ X (IN)			0			
MVMT. Δ Y (IN)			0			
MVMT. Δ Z (IN)			0			

TYPE OF ANALYSIS	THERMAL					
ANALYSIS NO.	66	66	66			
REV. NO./DATE	A/8-22-74	A/8-22-74	A/8-22-74	/	/	/
CASE	NORMAL	ACCID	TEST			
DATA POINT	247, 250, 253	247, 250, 253	247, 250, 253			
FORCE FX (LB)	-3358	-3458	-3458			
FORCE FY (LB)	78	84	84			
FORCE FZ (LB)	-1822	-1875	-1875			
MOMENT X (-LB)	0	0	0			
MOMENT Y (-LB)	0	0	0			
MOMENT Z (-LB)	0	0	0			
MVMT. X (IN)						
MVMT. Y (IN)						
MVMT. Z (IN)						

FILE COPY

TYPE OF ANALYSIS	DEAD LOAD		TRIB. PIPE WT.	
ANALYSIS NO.	4A-26	4A-24	4A-26	4A-24
REV. NO./DATE	1/11-23-81	0/11-20-81	/11-15-77	5/12-16-81
DATA POINT	25	20	25	20
FORCE X (LB)	-	—	822	2093
FORCE FY (LB)	-318	-278	318	305
FORCE Z (LB)	-	—	481	1035

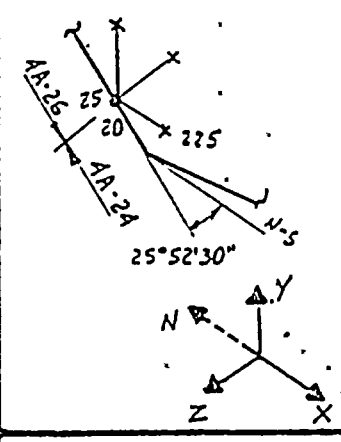

REV.	DATE	DESCRIPTION OF CHANGE	BY	CHKD.
8	12-21-81	REVISED 4A-26 HOSGRI & DL; ADDED NEW ANAL. — 4A-24 DE, HOSGRI, DL & TRIB. PIPE WT. (INCREASE)	D.S	TKO
7	10-5-81	REV. HOS, ADDED I.M., NEW FORMAT	H.S.	PI

P. G. & E. CO.

SH 1 OF 5 — REV. 8

PROJECT. D.C #1	LINE NO. 1 K 2297 6 C	SEQ. NO. A-141	41 / 39A
FILE NO. 33	SYSTEM RCP 1 CCW SUP HDR	RESTR. AXIAL Y, ⊥H	

TYPE OF ANALYSIS	SEISMIC					
ANALYSIS NO.	4A-26	4A-24	4A-24			
REV. NO./DATE	4/11-23-81	5/12-16-81	5/12-16-81	/	/	/
CASE	HOSGR1	HOSGR1	DE			
DATA POINT	25, 225	20	20			
FORCE X (LB)	131	1763	1272			
FORCE Y (LB)	65	75	27			
FORCE Z (LB)	52	1046	753			
MOMENT X (-LB)	–	–	–			
MOMENT Y (-LB)	–	–	–			
MOMENT Z (-LB)	–	–	–			
MVMT. X (IN)	0	0	0			
MVMT. Y (IN)	0	0	0			
MVMT. Z (IN)	0	0	0			

TYPE OF ANALYSIS	THERMAL					
ANALYSIS NO.						
REV. NO./DATE	/	/	/	/	/	/
CASE						
DATA POINT						
FORCE X (LB)						
FORCE Y (LB)						
FORCE Z (LB)						
MOMENT X (-LB)						
MOMENT Y (-LB)						
MOMENT Z (-LB)						
MVMT. X (IN)						
MVMT. Y (IN)						
MVMT. Z (IN)						

TYPE OF ANALYSIS	DEAD LOAD	TRIB. PIPE WT.
ANALYSIS NO.		
REV. NO./DATE	/	/
DATA POINT		
FORCE X (LB)		
FORCE Y (LB)		
FORCE Z (LB)		

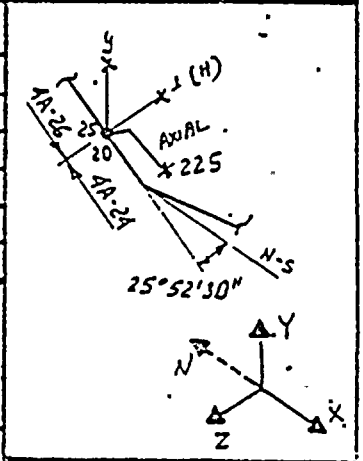

REV.	DATE	DESCRIPTION OF CHANGE	BY	CHKD.
8	12-21-81	SEE SH 1 OF 5	D.S	JLO

P. G. & E. CO.

SH 2 OF 5 REV. 8

PROJECT: D.C #1	LINE NO. 1 K17 2314 3 C	SEQ. NO. A141
FILE NO. 33	SYSTEM CCW RETURN HDR. FROM R.C.P.P.	RESTR. Y

41 / 39A

TYPE OF ANALYSIS	SEISMIC					
ANALYSIS NO.	4A-23	4A-23	4A-23	4A-23	4A-23	
REV. NO./DATE	7/8-18-80	7/8-18-80	7/8-18-80	7/8-18-80	8/11-30-81	
CASE	D.E.	D.E.	HOSGRI	HOSGRI	HOSGRI	
DATA POINT	19 (1)	19 (2)	19 (1)	19 (2)	19	
FORCE X (LB)	0	0	0	0		
FORCE Y (LB)	46	30	158	141	100	
FORCE Z (LB)	0	0	0	0		
MOMENT X (IN-LB)	0	0	0	0		
MOMENT Y (IN-LB)	0	0	0	0		
MOMENT Z (IN-LB)	0	0	0	0		
MVMT. X (IN)	0.121	0.262	0.219	0.360	0.325	
MVMT. Y (IN)	0	0	0	0	0	
MVMT. Z (IN)	0.320	0.715	0.570	0.977	1.033	

TYPE OF ANALYSIS	THERMAL					
ANALYSIS NO.	292 B	292 "B"	292 B			
REV. NO./DATE	5-24-73	6-20-74	5-24-73			
CASE	NORMAL	ACCIDENT	1% ACC			
DATA POINT	26 (II)	26 (III)	26 (I)			
FORCE X (LB)	0	0	0			
FORCE Y (LB)	0	0	-10			
FORCE Z (LB)	0	0	0			
MOMENT X (FT-LB)	0	0	0			
MOMENT Y (FT-LB)	0	0	0			
MOMENT Z (FT-LB)	0	0	0			
MVMT. X (IN)	-0.340	-0.340	-1.046			
MVMT. Y (IN)	0	0	0			
MVMT. Z (IN)	-0.740	-0.740	-1.087			

FILE COPY

TYPE OF ANALYSIS	DEAD LOAD	TRIB. PIPE WT.
ANALYSIS NO.	4A-23	4A-23
REV. NO./DATE	1/12-4-81	7/ 8-18-80
DATA POINT	19	19
FORCE X (LB)		–
FORCE Y (LB)	-186 ~~-200 (MAX SPAN)~~	189
FORCE Z (LB)		–

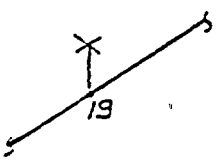

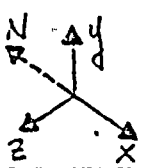

REV.	DATE	DESCRIPTION OF CHANGE	BY	CHKD.
8	12-12-8	REVISED 4A-23 HOS, DL, 292B, HOSGRI MOVT INCREASED.	D.S	J.HO
7	10-22-81	NO CHANGE ON THIS SH.	Z.T.	D.B.
6	8-23-80	REVISED DE, HOS. DATA, ADDED TRIB. PIPE WT.	Z.T.	JC
5	3/12/80	REHABILITATE (NO CHANGES)	LAR	BW

P. G. & E. CO.

SHT. 3 OF 5 — REV. 8

PROJECT. DC #1	LINE NO. 1 K 2303 4 C	SEQ. NO. A-141
FILE NO. 33	SYSTEM RCP 1 MTR UP BRG CLR CCW RET	RESTR. ANCHOR

41 / 39A

TYPE OF ANALYSIS	SEISMIC					
ANALYSIS NO.	4A-15	4A-15	4A-16	4A-16	4A-15	4A-16
REV. NO./DATE	4/2-7-73	5/10-3-81	/4-16-73	3/10-2-81	10-7-77	/9-12-77
CASE	DE	HOSGR1	DE	HOS.	HOS.	HOS.
DATA POINT	21	21	1	1	21	
FORCE X (LB)	1153	1142	78	157	1191	160
FORCE Y (LB)	7	39	18	47	38	35
FORCE Z (LB)	263	268	44	98	278	86
MOMENT X (IN-LB)	53	314	490	1458	323	1387
MOMENT Y (IN-LB)	9189	9141	1020	2131	9524	1123
MOMENT Z (IN-LB)	139	819	530	1399	806	985
MVMT. Δ X (IN)	0	0	0	0		
MVMT. Δ Y (IN)	0	0	0	0		
MVMT. Δ Z (IN)	0	0	0	0		

TYPE OF ANALYSIS	THERMAL					
ANALYSIS NO.	294	294				
REV. NO./DATE	E/1-11-73	E/1-11-73	/	/	/	/
CASE	NORM	ACCID				
DATA POINT	23	23				
FORCE X (LB)	-1245	-1245				
FORCE Y (LB)	51	51				
FORCE Z (LB)	-19	-19				
MOMENT X (FT-LB)	294	294				
MOMENT Y (FT-LB)	-3836	-3836				
MOMENT Z (FT-LB)	-79	-79				
MVMT. Δ X (IN)						
MVMT. Δ Y (IN)						
MVMT. Δ Z (IN)						

FILE COPY

TYPE OF ANALYSIS	DEAD LOAD	TRIB. PIPE WT.	
ANALYSIS NO.	SEE SHT. 4-4.	P.E.S./4A-15	P.E.S./4A-16
REV. NO./DATE	/	/11-10-77	/11-10-77
DATA POINT		21	1
FORCE X (LB)		607	549
FORCE Y (LB)	~~-214 (MAX. SPAN)~~	67	106
FORCE Z (LB)		269	291

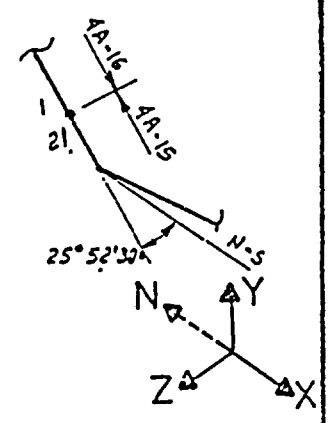

* SEIS. DATA CONTINUED ON SH. 5 OF 5

REV.	DATE	DESCRIPTION OF CHANGE	BY	CHKD.
7	10-22-81	REVISED HOSGR1 4A-15 & 4A-16 ON A NEW FORM	D.E.B.	Z.T.
7	10-22-81	ADDED TRIB. WT. 4A-15 & 4A-16	D.E.B.	Z.T.
8	12-21-81	REVISED HOS. ANAL. 4A-15, 4A-16. LOADS INCREASED — ADDED NEW DEAD LOAD & TRIB. PIPE WT ANAL. DATA.	D.S	ZHA

P. G. & E. CO.

SH 4 OF 5 — REV. 8

76-1450 (5-80)

PROJECT. DC #1	LINE NO. 1 K 2303 A C	SEQ. NO. A-141
FILE NO. 33	SYSTEM RCP I MTR UP BRG CLP CCW RET	RESTR. ANCHOR

41 / 39A

TYPE OF ANALYSIS	SEISMIC					
ANALYSIS NO.	4A-15	4A-16	4A-16			
REV. NO./DATE	6/11-20-8	4/12-17-81	4/12-17-81			
CASE	HOSGRI	DE	HOSGRI			
DATA POINT	21	1	1			
FORCE F_X (LB)	1142	76	133			
FORCE F_Y (LB)	34	19	79			
FORCE F_Z (LB)	268	43	76			
MOMENT X (IN-LB)	270	589	1704			
MOMENT Y (IN-LB)	9141	988	2196			
MOMENT Z (IN-LB)	707	533	2334			
MVMT. ΔX (IN)	0	0	0			
MVMT. ΔY (IN)	0	0	0			
MVMT. ΔZ (IN)	0	0	0			

TYPE OF ANALYSIS	THERMAL					
ANALYSIS NO.						
REV. NO./DATE						
CASE						
DATA POINT						
FORCE (LB)						
FORCE (LB)						
FORCE (LB)						
MOMENT (-LB)						
MOMENT (-LB)						
MOMENT (-LB)						
MVMT. (IN)						
MVMT. (IN)						
MVMT. (IN)						

TYPE OF ANALYSIS	DEAD LOAD		TRIB. PIPE WT.
ANALYSIS NO.	4A-15	4A-16	
REV. NO./DATE	6/11-20-81	0/12-18-81	SEE SH.
DATA POINT	21	1	4 OF 5
FORCE X (LB)	0	-1	FOR TRIB. DATA
FORCE Y (LB)	-67	-106	
FORCE Z (LB)	0	-2	
MOMENT X IN-LB	402	-1308	
MOMENT Y IN-LB	0	-57	
MOMENT Z IN-LB	-1035	2399	

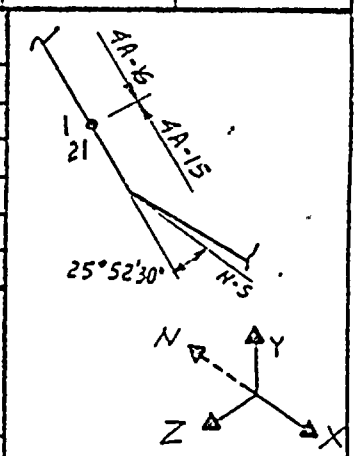

P. G. & E. CO.

REV.	DATE	DESCRIPTION OF CHANGE	BY	CHKD
8	12-21-81	SEE SH 4 OF 5	D.S.	JHO

SH 5 OF 5 REV 8

PROJECT. DC-#1	LINE NO. 1 K 2297 6 C	SEQ. NO. A-83	52 / 7A
FILE NO. 33	SYSTEM RCD 1 CCW SUP HEADER	RESTR. X Y Z	

TYPE OF ANALYSIS	SEISMIC					
ANALYSIS NO.	4A-26		~~4A-26~~			
REV. NO./DATE	2/9-15-77	/	~~3/10-4-81~~	/	/	/
CASE	DE		~~HOS~~			
DATA POINT	1		~~1~~			
FORCE X (LB)	63		~~124~~			
FORCE Y (LB)	38		~~39~~			
FORCE Z (LB)	88		~~173~~			
MOMENT X (IN-LB)	1146		~~2134~~			
MOMENT Y (IN-LB)	1200		~~1298~~			
MOMENT Z (IN-LB)	956		~~1665~~			
MVMT. Δ X (IN)	0		~~0~~			
MVMT. Δ Y (IN)	0		~~0~~			
MVMT. Δ Z (IN)	0		~~0~~			

TYPE OF ANALYSIS	THERMAL					
ANALYSIS NO.	66	66	304			
REV. NO./DATE	A/8-12-74	A/8-22-74	A/4-16-73	/	/	/
CASE	NORM	ACCID	NORM.			
DATA POINT	265	265	140			
FORCE X (LB)	544	543	2012			
FORCE Y (LB)	-344	-343	20			
FORCE Z (LB)	-130	-129	-419			
MOMENT X (FT.-LB)	636	637	-398			
MOMENT Y (FT.-LB)	274	274	-2,434			
MOMENT Z (FT.-LB)	-310	-310	221			
MVMT. Δ X (IN)	0	0	0			
MVMT. Δ Y (IN)	0	0	0			
MVMT. Δ Z (IN)	0	0	0			

FILE COPY

TYPE OF ANALYSIS	DEAD LOAD		TRIB. PIPE WT.	
ANALYSIS NO.	~~4A-26~~	4A-29	4A-26	4A-29
REV. NO./DATE	~~11-15-77~~	11-15-77	11-15-77	11-15-77
DATA POINT	~~1~~	1	1	1
FORCE X (LB)	~~0~~	0	318	51
FORCE Y (LB)	~~204~~	73	204	73
FORCE Z (LB)	~~0~~	0	311	159

NOTE: USE T.H. WT. FOR D.L.

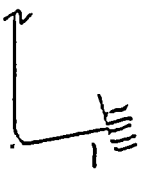

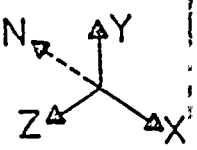

P. G. & E. CO.

REV.	DATE	DESCRIPTION OF CHANGE	BY	CHKD.
4	12-1-81	ADDED HOS & DL. LOADS INCREASED	D.E.B.	DPJ
3	10-3-81	REV. D.E. HOS. D.L. ADDED T.H	HSS.	PI

SH 1 OF 3. REV. 4

76-1450 (3-80)

PROJECT. D.C.#1	LINE NO. 1 K 2297 6 C	SEQ. NO. A-83	52
FILE NO. 33	SYSTEM RCP 1 CCW SUD HEADER	RESTR. XYZ	7A

TYPE OF ANALYSIS	SEISMIC					
ANALYSIS NO.			4A-26			
REV. NO./DATE			4/11-23-81			
CASE			HOSGR1			
DATA POINT			1			
FORCE X (LB)			115			
FORCE Y (LB)			31			
FORCE Z (LB)			149			
MOMENT X (IN -LB)			1896			
MOMENT Y (IN -LB)			1678			
MOMENT Z (IN -LB)			1528			
MVMT. X (IN)			–			
MVMT. Y (IN)			–			
MVMT. Z (IN)			–			

TYPE OF ANALYSIS	THERMAL					
ANALYSIS NO.						
REV. NO./DATE						
CASE						
DATA POINT						
FORCE (LB)						
FORCE (LB)						
FORCE (LB)						
MOMENT (-LB)						
MOMENT (-LB)						
MOMENT (-LB)						
MVMT. (IN)						
MVMT. (IN)						
MVMT. (IN)						

FILE COPY

TYPE OF ANALYSIS	DEAD LOAD	TRIB. PIPE WT.
ANALYSIS NO.	4A-26	
REV. NO./DATE	1/11-23-81	
DATA POINT	1	
FORCE X (LB)	6	
FORCE Y (LB)	-204	
FORCE Z (LB)	-19	
MOMENT X (IN-LB)	3091	
MOMENT Y (IN-LB)	-286	
MOMENT Z (IN-LB)	3230	

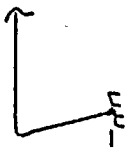

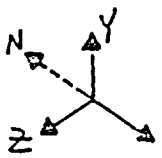

P. G. & E. CO.

REV.	DATE	DESCRIPTION OF CHANGE	BY	CHKD.
4	12-1-81	ADDED HOS. & DL (SEE SHT. 1)	DPJ	D.E.B.

SH 2 OF 3 REV. 4

FILE 33

52 / 7A

ANCHOR DATA

USE VALUES GIVEN FROM COMPUTER OUTPUT

LINE NO.	1-K-2297-6 [C]					
	THERMAL ANAL. DATA					
	NORMAL		ACCIDENT		TEST	
ANAL. NO.	304A	66A		66A		
ANAL. DATE	4-16-73	8-22-74		8-22-74		
DATA PT. NO.	140	265		265		
FX (LB)	2012	544		543		
FY (LB)	20	-344		-343		
FZ (LB)	-419	-130		-129		
MX (FT-LB)	-398	636		637		
MY (FT-LB)	-2434	274		274		
MZ (FT-LB)	221	-310		-310		
DEAD LOAD (LB)	-535					

FILE COPY

FILE COPY

	SEISMIC ANAL. DATA				HOSGRI ANAL. DATA			
ANAL. NO.	4A-26		4A-29		4A-26		4A-29	
ANAL. DATE	4-11-73		9-12-73		9-16-77		9-15-77	
DATA PT. NO.	1 XY	YZ	1 XY	1 YZ	1 CASE1	1 CASE2	1 CASE1	1 CASE2
FX (LB)	21	45	70	72	82	99	255	299
FY (LB)	15	34	6	6	25	27	24	26
FZ (LB)	44	50	38	13	120	145	76	54
MX (IN-LB)	213	357	216	221	1657	1745	1395	1434
MY (IN-LB)	259	234	1134	1664	542	1084	5675	7038
MZ (IN-LB)	90	130	163	182	1278	1351	723	801

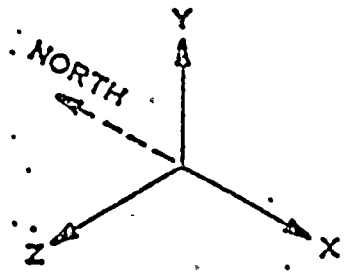

REV. 4 • SEE SHTS. 1 & 2

REV. 3 DELETED D.E. and HOS. H.SS. SH-3-3

SEE SHT. 1.

TAB. R. Eppo 1-12-80 REV. 2

CHKD: A. CONLEY 1-14-80 REV. 2

* "INCREASED"

CHANGE 4

ITEM J

PIPING SCHEMATIC DIAGRAMS

PIPING & INSTRUMENTATION DIAGRAMS (P & ID)

ITEM J

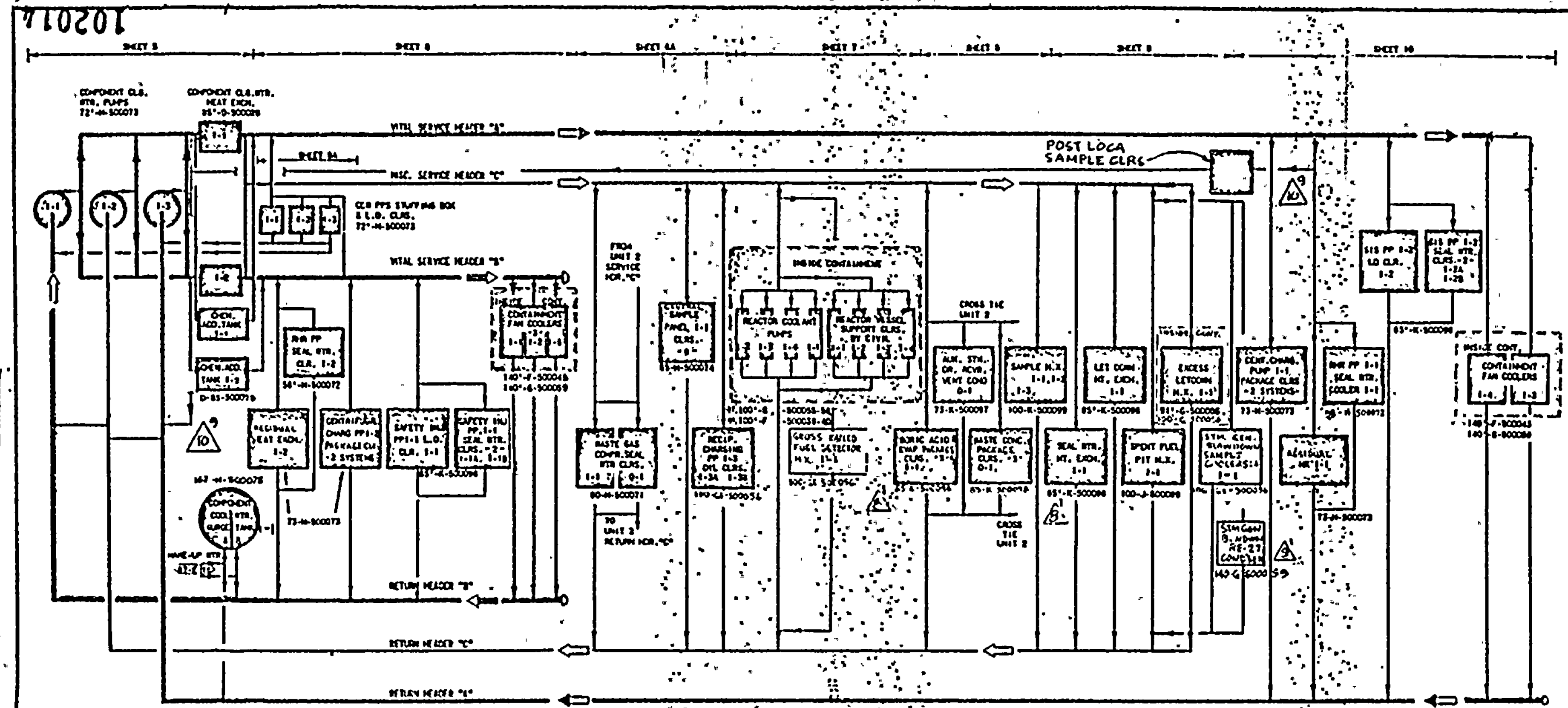

BASIC DIAGRAM

ELECTRICAL					10	JC/ ..		
APPROVED BY ENGR.	CHANGE NUMBER & ENGINEER							
PIPING	7		8	EWS	9		10		11	
INSTRUMENT	7		8		9		10		11	
SYSTEMS	7		8		C		10		11	
PROJ/CHIEF	7		8		9	DVK/AL	10		11	

NO.	DATE	DESCRIPTION	GM	BY	CH.	APPD LEAD ENGR
6	5-22-75	SEE DESCRIPTION OF CHANGES, SHT 4A	169972	GTH	LM	
11	7-29-81	REVISED SHT. 5 (SEE SHT. 13 FOR DETAILS)	167027			
10	12-10-80	REV'D ALL 5-15; ADD SHT 13; SEE SHT-13 DETAIL	167027	JZB	TO/	
9	1-30-79	AS BUILT: SEE SHT-4B FOR DETAILS		T.O	LM	
8	5-19-78	SEE DESCRIPTION OF CHANGES, SHT 4B	167027	T.O.	LM	JUG
7	6-9-76	SEE DESCRIPTION OF CHANGES, SHT 4B	167027	GTH	LM/EV	

TABLE OF CHANGES

GENERAL NOTES

1. ALL PIPING IN THIS SYSTEM WILL BE PG&E CLASS "C" UNLESS OTHERWISE NOTED
2. ALL VALVES WITH ITEM NUMBERS FALL UNDER SPEC 8729 EXCEPT ITEM A WHICH IS UNDER SPEC 1160, OR AS NOTED. FOR VALVE DESCRIPTION AND PG&E RECORD NOS., SEE PG&E DWG NO. 102039
3. VITAL SERVICE HEADER "A"
VITAL SERVICE HEADER "B"
MISC SERVICE HEADER "C"

MECH. PIPING DWG. NOS.

UNITS 1&2

COAST VALLEYS DIVISION

D. V. KELLY No. 5269 MECHANICAL STATE OF CALIFORNIA

APPROVED BY

GM 167027 & 169972
SUPERV. V. GODSON
DSGN. GTH
DR.
CH. MANALAC
O.K.
DATE 2-2-72
SCALE NONE

PIPING SCHEMATIC
COMPONENT COOLING WATER SYSTEM

DIABLO CANYON
DEPARTMENT OF ENGINEERING
PACIFIC GAS AND ELECTRIC COMPANY
SAN FRANCISCO, CALIFORNIA

BILL OF MATERIAL
DRAWING LIST 050052
SUPERSEDES
SUPERSEDED BY INC 5A & 6A
SHEET NO. 1 OF 15 SHEETS
DRAWING NUMBER 102014 CHANGE 11.

INST. CHECK: C.M. Valoriano LINE CHECK: VALVE CHECK:

RM INDEXED REV. 11

35 MM

SYSTEM OR EQUIPMENT	DESCRIPTION	CO-ORDINATES
	6-8-67 BY WHC ISSUED FOR PRELIMINARY INFORMATION CHANGE 01 BY WHC 6-30-67 GENERAL REVISION	
	CHANGE 02 REVISED-SHEET 6 DELETED-SHEET 6 ADDED-B.A. EVAP.COND. GENERAL REVISION	
	CHANGE 03 MAY 20, 1968	
BASIC DIAGRAM	REVISED-SEQUENCE WITHIN MAIN HDRS. SHEET 1 ADDED,DELETED AS LISTED BELOW	
NORM OPER.MAX.COOLDN. POST ACCIDENT COOL.SYS.	ADDED-TO SYSTEM SHEET 1A	
SUP.HD "A"AND "B"	REVISED-EXCH HDR. "A" FROM BOTTOM TO TOP & HDR."B" FROM TOP TO BOTTOM	(20-59)-E
WASTE GAS COMPRESSOR	ADDED-TO SYSTEM 27-C	
RESIDUAL HT.EXCH. #1	REVISED-SEQUENCE, WITHIN MAIN HDR. SYSTEM, ADDED DISTRIBUTION HDRS.FOR WASTE GAS COMPRESSOR & RESIDUAL HT.REM.CLR. #1	28-C
RESIDUAL HEAT REMOVAL L.O. COOLER #1	ADDED-TO SYSTEM 29-C	
UNIT 1 EMERGENCY AIR COMPRESSOR & AFTER COOLERS	ADDED-TO SYSTEM (30-34)-(B-D)	
RESIDUAL HT. EXCH. #2	REVISED-SEQUENCE, WITHIN MAIN HDRS. SYSTEM, ADDED DISTRIBUTION HDRS. OF RESIDUAL HT. REMOVAL L.O. COOLERS #2.	35-(C-D)
RESIDUAL HEAT REMOVAL L.O. COOLER #2	ADDED-TO SYSTEM 36 C	
SAFETY INJECTION PPS L.O. COOLERS #1 & 2	ADDED-TO SYSTEM (37-38)-C	
CHARGING PUMPS FLUID DRIVE L.O. COOLERS #1 & #2	ADDED-TO SYSTEM (38-39)-C	
REACTOR COOLANT PUMP #1,2,3,4	REVISED-SEQUENCE, WITHIN MAIN HEADERS SYSTEM (40-47)-(A-E)	
SEAL WATER HT. EXCHANGER	REVISED-SEQUENCE, WITHIN MAIN HDRS.SYSTEM, ADDED DISTRIBUTION HDRS. FOR LETDOWN HT. EXCH. & ALL SAMPLE COOLERS.	(48-49)-(A-E)
LETDOWN HEAT EXCHANGER	REVISED-SEQUENCE, WITHIN MAIN HDRS. SYSTEM. (SEE SEAL WATER HT.EXCH.ABOVE) 50-(C-D)	
SAMPLE COOLERS PRESSURIZER STM. SPACE & PRESSURIZER LIQUID SPACE	REVISED-SEQUENCE, WITHIN MAIN HDRS SYSTEM (SEE SEAL WATER HT. EXCH.)	(51-52)-(C-D)
REACTOR COOLANT SAMPLE HT. EXCH.	REVISED-CALL-OUT TO HOT LEG LOOP 2 & 3 HT. EXCH. (SEE SEAL WATER HT. EXCH)	(35-36)-(C-D)
STM.GEN.BLOWDOWN SAMPLE HT. EXCH. HDS. 1,2,3,4	ADDED-TO SYSTEM (54-56)-(C-D)	
BORIC ACID EVAPORATOR CONDENSER	REVISED-SEQUENCE, WITHIN MAIN HDRS. SYSTEM, ADDED DISTRIBUTION HDRS FOR WASTE EVAPORATOR VENT CONDENSER	(57-58)-(C-D)
WASTE EVAPORATOR VENT CONDENSER	REVISED-(SEE BORIC ACID EVAP. COND. ABOVE) (58-59)-(C-D)	
EXCESS LETDOWN HT. EXCHANGER	ADDED-TO SYSTEM 59-C	
SPENT FUEL PIT SYSTEM	REVISED-SEQUENCE WITHIN MAIN HDRS. SYSTEM 51-(A-E)	
EMERGENCY FEED PUMP L.O. COOLERS	ADDED-TO SYSTEM (53-54)-(B-D)	
	CHANGE 04 JULY 1, 1968 BY HG	
BASIC DIAGRAM	REVISED-SEQUENCE WITHIN MAIN HEADERS, ADDED, DELETED AS LISTED BELOW SHEET 1	
NORMAL OPERATION MAXIMUM COOLDOWN POST ACCIDENT	REVISED-SAME AS CHANGES ON BASIC DIAGRAM, RESIDUAL HT. EXCH. & L.O. CLR 1 & 2 HEADER CONNECTION SHEET 1A	
HEADER A&B	REVISED-LINE SIZE TO 18" SHEETS 2-5	
COMPONENT CLG.SURGE TANK	REVISED-SYSTEM CONNECTIONS BECAUSE OF ADDED TANK DIVIDER 24-(A-E)	
WASTE GAS COMPRESSOR	REVISED-DELETED SYSTEM CONNECTION TO HEADER "A" 27-(A-E)	
RESIDUAL HEAT EXCH. & LUBE OIL COOLER #1	REVISED-SEQUENCE CONNECTIONS WITHIN MAIN HEADER FROM SHEET 2(28-C) TO SHEET 3(34-C)	
UNIT 1 EMER. AIR COMPRESSOR & AFTER COOLER #1	REVISED-SEQUENCE CONNECTIONS WITHIN MAIN HEADER FROM HDR. A & B TO HDR. B ONLY 30-(A-B)	

SYSTEM OR EQUIPMENT	DESCRIPTION	CO-ORDINATES
UNIT 2 EMER. AIR COMPRESSOR & AFTER COOLER #2	REVISED-SEQUENCE CONNECTIONS WITHIN MAIN HEADER FROM HDR. A & B TO HDR. A ONLY 30-(A B)	
SAFETY INJECTION PPS L.O. COOLERS #1 & 2	REVISED-SEQUENCE CONNECTIONS WITHIN MAIN HEADER FROM SHEET 3 TO SHEET 4A	
CHARGING PUMPS FLUID DRIVE L.O. COOLERS #1 & 2	REVISED-SEQUENCE CONNECTIONS WITHIN MAIN HEADER FROM SHEET 3 TO SHEET 4A	
LINE SIZES	ADDED-TO SYSTEM SHEET 2 TO SHEET 6	
REACTOR COOLANT PUMPS	REVISED-SEQUENCE CONNECTIONS WITHIN MAIN HEADER FROM 40-D TO 43-D FROM 46-B TO 43-B FROM 47-B TO 44-B	
SEAL WATER HEAT EXCH.	REVISED-SEQUENCE CONNECTION WITHIN MAIN HEADER FROM SHEET 6 TO SHEET 4A	
LETDOWN HEAT EXCH.	REVISED-SEQUENCE CONNECTION WITHIN MAIN HEADER FROM SHEET 6 TO SHEET 4A	
SAMPLE HEAT EXCH.	REVISED-SEQUENCE CONNECTION WITHIN MAIN HEADER FROM SHEET 4 TO SHEET 5	
NOTE	ADDED TO SHEET SHEET 1A	
BORIC ACID EVAPORATOR CONDENSER & WASTE EVAP. VENT CONDENSER	REVISED-SEQUENCE CONNECTION WITHIN MAIN HDR. 57-D	
CHR FEED PUMPS L.O. COOLERS	REVISED-SEQUENCE CONNECTION WITHIN MAIN HDR. ADDED #3 MOTOR DRIVE L.O. CLR. SHEET 6	
SPENT FUEL PIT SYSTEM	REVISED-SEQUENCE CONNECTION WITHIN MAIN HDR. FROM 51(A-E) TO 43 (A-E)	
CONTAINMENT FAN COOLERS	REVISED-SEQUENCE CONNECTION WITHIN MAIN HEADER SHEET 6	
	CHANGE 05 SEPTEMBER 24, 1968	
PIPING SCHEM.TITLE	REVISED TO COMPONENT COOLANT SYST.BAS AUXILIARY COOLANT SYSTEM SHEET 1	
	CHANGE 06 MAY 27, 1969 HG/BSH/GAA	
COMPLETE SYSTEM	REDRAWN SHEET 1-10	
BASIC DIAGRAM	REVISED-SEQUENCE WITHIN MAIN HEADERS ADDED DELETED AS LISTED BELOW SHEETS 1 & 4	
BORIC ACID CONDENSATE COOLER	ADDED-TO SYSTEM 81-C	
HEADER SYSTEM	REVISED-TWO HEADER SYSTEM TO THREE HEADER SYSTEM SHEETS 5 10	
CHEMICAL ADDITION TANKS	ADDED-TO SYSTEM 54-55-C	
SURGE TANK	ADDED-NOZZLE CONNECTIONS 57-C	
RESIDUAL HEAT REMOVAL	REVISED-L.O. COOLER (#1-2) REPLACED BY A PUMP 64-C	
AIR VENT	ADDED-TO SYSTEM 84-C	
REACTOR VESSEL SUPPORT COOLER	ADDED-TO SYSTEM 78-79-(B-D)	
RESIDUAL HEAT REMOVAL PUMP STUFFING BOX JACKET	ADDED-TO SYSTEM 64-C & 106-C	
RESIDUAL HEAT REMOVAL PUMP L.O. COOLER	DELETED-FROM SYSTEM 39-(C-D)	
BORIC ACID EVAP. & WASTE EVAP. COND.	REVISED-SEQUENCE CONNECTIONS WITHIN HEADER "C" FROM 58 & 59 (B D) TO 60 & 61 (B D)	
SAMPLE HEAT EXCH.	REVISED-SEQUENCE CONNECTION WITHIN HEADER "C" FOR PR.LIQUID SPACE (#1-6) & STEAM SPACE (#1-5) SHEET 5 TO SHEET 6	
RESIDUAL HEAT REMOVAL	REVISED-L.O. COOLER (#1-1) REPLACED BY A PUMP 106 (B C)	
LINE & ELEMENT DESIGNATION	REVISED-CALL OUT NOS. & SIZES SHEETS 5 10	
NOTE	ADDED-TO SHEET 4 & 5	
ENCR AIR DRYER COOLER	ADDED-TO SYSTEM (60-61)-C	
AUXILIARY FEED PUMP TURB. DRIVEN COOLER & MOTOR DRIVEN COOLER	DELETED-FROM SYSTEM 99-(C-D)	
	CHANGE 07 BY BSH/RRO/GAA JUNE 18, 1969	
TITLE	REVISED-TITLE FROM "COOLANT TO COOLING SHEET 1	
	CHANGE 08 OCT.20, 1969 BY LH/HG/AL	
TITLE PAGE	ADDED-NOTE: THIS IS A CLASS 1 SYSTEM INCLUDING ALL VALVES, MAX. OPERATING CONDITIONS-150#, 300°F. SHEET 1	

SYSTEM OR EQUIPMENT	DESCRIPTION	CO-ORDINATES
TABLE OF CHANGES	ADDED-SHEET 3A SHEET 3A	
VALVE SPECIFICATIONS	ADDED-TO ALL SYSTEMS ALL SHEETS	
CONTROL VALVES	REVISED-ALL MOTOR OPERATED VALVES REVISED TO PNEUMATICALLY OPERATED VALVES ALL SHEETS	
CONTAMINATED WATER MAKE UP	ADDED-CONTROL VALVE & BY PASS 568	
EMERGENCY AIR COMPRESSOR UNIT #1	ADDED-CONTROL VALVE TO REFLECT VENDOR DWG. 618	
REACTOR COOLANT PUMPS	REVISED-SIZES OF LINES 134 137, 3" TO 4" 73 77-D SIZES OF LINES 2303 2306 3" TO 4" 73 77-C SIZES OF LINES 2314, 2315 2342, 2343 4" TO 3" 73 77-C SIZES OF LINES 2324, 2315 2" TO 3" 78, 77-D SIZE OF LINE 143, 8" TO 6" 75B	
	ADDED-BY PASS FROM DISCHARGE TO SUCTION HEADER, AND FCV AND FE 52C	
SURGE TANK	REVISED-FCV 429 VENT TO ATMOSPHERE 57C	
	ADDED-NOTE 4": VALVE TO CLOSE ON "D" SIGNAL ONLY IF ACCOMPANIED BY REACTOR POWER LEVEL SIGNAL BOTH MUST BE PRESENT FOR CLOSING 52A	
WASTE GAS COMPRESSOR	REVISED-ENLARGED DRAWING & CHANGED SHEET NO TO 6A SHEET 6A	
	ADDED-	
REACTOR CLG. PUMPS	REVISED-ENLARGED DRAWING, CHANGED RC PUMP THERMAL BARRIER SUPPLY TO 3" FROM 4". SHEET 7	
REACTOR VESSEL SUPPORT COOLERS	REVISED-OIL BEARING RETURN HEADER FROM R143 TO R142 768	
BORIC ACID EVAPORATOR PACKAGE	DELETED-DISTILLATE COOLER 61C	
SEAL WATER HEAT EXCHANGER	ADDED-BUTTERFLY VALVE 918	
RESIDUAL HEAT EXCHANGER	REVISED-RELIEF VALVE SYSTEM TO RETURN TO DOWNSTREAM OF FLOW CONTROL VALVE 10*B	
BORIC ACID AND WASTE EVAPORATORS	REVISED-CONCENTRATE, STEAM, AND DISTILLATE COOLER ADDED SHEET 7A	
CONTAIN FAN COOLERS NO.1,2,3 & 4	REVISED-HEADER SEQUENCE SHEET 6, 10	
PRESSURE,TEMP. ANALYSIS, LEVEL ELEMENT	REVISED-TO INSTRUMENT NOS ALL SHEETS	
SAFETY INJECTION SEAL RECIRC. COOLER	ADDED-TO SYSTEM SHEET 6	
	CHANGE 09 BY HG/RRO/GAA SPEC.0735	
	11-3-69 ISSUED FOR PIPING SPEC.0711, MECH EQPT,INSTALL.&TURB.GEN.ERECTION SPEC.0751	
	CHANGE 10 2-24-70 BY LPG/HG/ALZ	
BASIC DIAGRAM	REVISED-SEQUENCE WITHIN MAIN HDRS., REV'D., ADDED AND DELETED AS LISTED BELOW SHEET 1	
NORMAL OPER. MAX. COOLDOWN & POST ACCIDENT	REVISED-SAME AS CHANGES ON BASIC DIAGRAM SHEET 4	
COMP.CLG.WTR.PP'S. 1-1, 1-2 & 1-3	REVISED-SEQUENCE WITHIN MAIN HDR. SYM. SHEET 5	
SURGE TANK 1-1	REVISED-DEMIN. WTR. MAKE-UP SUP. & ADDED BRANS. MAKE-UP & PRIMARY WTR. MAKE-UP AS NEW SOURCES OF SUP. SHEET 5	
COMP.CLG.WTR.PP'S. L.O. COOLERS 1,2,&3	ADDED-TO SYSTEM SHEET 5A	
GAS COMPR.SEAL WTR. CLR'S. O.C.(& 1-1	ADDED-RELIEF VALVES SHEET 6A	
REACTOR VESSEL SUP'S. 1,2,3 & 4	ADDED-SPARE COILS TO SYSTEM,DRAINS & RELIEF VALVES SHEET 7	
REACTOR COOLANT PP'S 1-3 & 1-4	ADDED-COMP.CLG.WTR.SUP.HDR'S. SHEET 7	
COMP.CLG.WTR.SUP. & RET.LINES ,133,102 & 103	ADDED-TEST CONN'S. SHEET 7	
AIR.STM.DRAIN VENT CONDENSER	ADDED-TO SYSTEM SHEET 8	
BORIC ACID CONC. PROCESS CLR'S. & WASTE CONCENTRATOR	REVISED-SYSTEM & DELETED CONC. CLR. & STM COND SHEET 7A	
CENTRIFUGAL CHG. PP'S L.O. COOLERS	ADDED-TO SYSTEM GEAR CLR'S. SHEET 10	

SYSTEM OR EQUIPMENT	DESCRIPTION	CO-ORDINATES
	CHANGE 011 APRIL 14, 1970 BY LPG/HG/ALZ	
BASIC DIAGRAM	ADDED-QUALITY ASSURANCE CODE CLASSES, EQUIP. LOC.-ELEV. AREA & N. DWG. SHEET 1	
QUALITY ASSUR. CODES	ADDED-TO SYSTEM SHTS.9 10	
CCW PP.1-1,2&3 (DISCH.HDR)	REVISED-REVERSED VALVES 51,52 & 54-E	
ANALYZER PNL. (PH)	ADDED-ISOLATION VALVES (RET & SUP) 56-D,E & A	
CCW HT EXCH. 1-2 (DISCH.)	REVISED-CLOSED FCV-431 59-D	
CCW HDR'S A&B	REVISED-HDR "A" BAS TO PP.1-1 & HDR "B" BAS TO PP 1-3 50-E 54-E	
CCW PP'S & L.O. CLR.(SUP. & RET.)	ADDED-CHECK VALVES (C-0244) 51A,54A-D &B	
RESID.HT.EX.-2 CCW RET	REVISED-REVERSED POS. OF VALVES (FCV-364 & BUTTERFLY) 63-C	
CNT.FAN CLR'S (1-1, 2 & 3)	ADDED-LINES 3163 3166 LINES 3173 3176 67,68 & 69-C 73-B	
HOP BARRIER CCW RET.HDR. (LINE 143)	ADDED-V-[illegible]	
REACT.VESS. SUPPORTS CCW RET.	ADDED-3/4" VENTS 78-B	
B.A.COND.CCW SUP.& RET.	REVISED-LINES 2312 & 2347 HERE 8" 73A-54D	
RCP'S 1 & 4 (THERM BARR. & L.O. CCW SUP.)	REVISED-MANIFOLDING 70,72,74 & 78-D	
RCP'S 1 & 4 (THERM BARR. CCW RET.& SUP.)	REVISED-SPEC.DWG.(VALVES HERE C-0244 & B-0106)	
AIR.STM.DR. REG.VENT COND.	DELETED-CCW RET. PCV & V-0673 81-B	
	ADDED-LINE SIZES (SUP & RET)	
LET DN HT. EXCH.1-1 CCW RET.	REVISED-TCV BAS FCV-356 93-B	
EXCESS LET DN HT.EXCH.CCW RET.	REVISED-CLOSED FCV-361 96-B	
RESIDUAL HT. EXCH.1-1 CCW RET.	REVISED-REVERSED FCV-365 & BUTTERFLY VALVES 105-B	
CNT FAN CLRS. 1-3 & 1-4	ADDED-LINES 3169 3172 3179 3182 108-C 109-C	
	CHANGE 012 JUNE 1970 BY LPG/HG/ALZ	
BASIC DIAGRAM	REVISED-SEQUENCE WITHIN MAIN HEADERS, ADDED, DELETED AS LISTED BELOW SHT.1	
NORM OPER.MAX COOLDN. POST ACCIDENT	REVISED-SAME AS ABOVE SHT.4	
INSTR.NO'S	REVISED-HELD SHT.9 10	
CCW PP'S RECIRC.(RC-103, 104 & 105)	DELETED-FROM SYSTEM 50,52,53-E	
ANALYZER PANELS 4IN & OUT VALVES)	REVISED-HERE B-0106 56-A & C	
CHEM.ADD TK'S. (IN & OUT VALVES)	REVISED-CLOSED SYSTEM 54,55-C	
CCW SURGE TK (RV-45 INLET)	REVISED-BAS 4" 57-C	
(VENT CONTR. VAL)	REVISED-BAS FCV-429 57-C	
(RTR MU LCV-69 & 70)	REVISED-HERE DIAPH. VALVES 55-B	
(CHANGE SPEC.)	ADDED-TO SYSTEM 55-B	
(RTR.MU BY-PASS)	REVISED-HERE 4" 55-B	
RADIATION ELEM'S (RE-10, 11 & 12)	DELETED-FROM SYSTEM & ADDED RE-16 50-C	
SERV.WTR.NO. TK.MAKE-UP WTR. SUP.	ADDED-TO SYSTEM 54-B	
HDR'S "A & B" CLR SUP & RET.	ADDED-CLR. AIR COMP. 1-1 & 1-2 50A-D & B 54A-D & B	
CCW SUP & RET. HDR'S (2134 & 2135)	DELETED-CHECK VALVES & ADDED 2 GATE ISOL. VALVES. SHT 6	

P. G. & E. CO.	DRAWING NO.	CHANGE
SHEET 2 OF 10 SHEETS	102014	10

APPR. 10 RM INDEXED REV. 10

30 | 31 | 32 | 33 | 34 | 35 | 36 | 37 | 38 | 39

SYSTEM OR EQUIPMENT	DESCRIPTION	CO-ORDINATES
AUX SERV.WTR.SUP. & RET	REVISED-NONE 2"	51A,54A,56A -D & B SHEET 6
RESIDUAL HT REM. PP 1-2 SEAL WTR CLR.	REVISED-TITLE WAS RHR PP JACKET	64-C
CNT.FAN CLR'S.COIL LINE DES.	DELETED-FROM SYSTEM	67,68-C
RES.HT EXCHG.1-2 OUT	ADDED-FI-177	63-C
S.I. PUMP CLR'S		
1-1	REVISED-LOCATION OF FI-83	65-C
1-2	ADDED-FI-146	66-C
HEADER "C" SYS.	DELETED-TI'S FROM SYSTEM	SHT. 6A
LUBE OIL CLR.1-3	ADDED-FI-178	65A-B
CNT.ISOL.CRIT PENT.19	REVISED-FCV-356 HAS A DIAPHRAGM VALVE	74-D
PENT.20	ADD-(IN CNT) FCV-749 & T.C.	72-B
	REVISED-(OUT CNT) FCV-363 HAS DIAPH. VAL.	
	DELETED-(OUT CNT) CHECK VALVE	
CNT ISO.CRIT. PENT 21	ADDED-(IN CNT.) FCV-750 & T.C.	74-B
REACT.VES.SUPPT'S.	REVISED-SYSTEM	77,78,79
COMP.CCW RET HDR.	DELETED-FI-102 & FI-103	71A,75A-B
SAMPLE CLR'S & CHILLED WTR.SYSTEM	ADDED-TO SYSTEM FR P&I 102019	SHT.8
CCW SUP & RET HDR'S (SAMPLE HT-EXCH'S)	REVISED-SYSTEM	85,88-A&D
TI'S	DELETED-FROM SYSTEM	SHT.6
TI'S & FI'S	DELETED-FROM SYSTEM	SHT 9
CNT ISOL.CRIT PENT 22	REVISED-CHECK VALVE WAS IN-CNT	94-D
EMER. AIR. COMPR. 1-2	REVISED-LOCATION CCW RET & SUP. CONN'S.	100,102-B & E
TI'S	DELETED-FROM SYSTEM	SHT 10
RES.HT-EXCH. & SEAL WTR. CLR. DISCH. 1-1	ADDED-FI'S-228 & 229	105, 106-B
RES HT. REM. PP. SEAL WTR. CLR.	REVISED-TITLE WAS RHR PP. JACKET	106-C
"STATUS OF DESIGN"	ISSUED-TO UPDATE SCHEMATIC RECIPIENTS (DETAILED CHECK WAIVED, PARTIAL CHECK ONLY.)	
	CHANGE 013 BY EPG/MG/MLZ JULY , 1970	
BASIC DIAGRAM	REVISED-SEQUENCE WITHIN MAIN HDRS. AS LISTED BELOW	SHT.1
NORMAL OPER MAX. COOLDN. & POST ACCIDENT	REVISED-SAME AS ABOVE	SHT.4
CCW PP'S RECIRC. HDR'S.	DELETED-REDUCERS	50 53-E
CCW HT EXCH'S (INLETS)	ADDED-TI-95(1-1) & TI-96(1-2)	57-D & E
	DELETED-PI-43 & PI-45	54-D & E
CCW PP'S INLETS (RAD MON'S)	REVISED-ADDED RE-16A & LOCAL RAD TAPS	55-E & 50-C
SERV.WTR NO.TK.SUP. HDR.	DELETED-LINE 3188	54-B
EMER AIR COMPR.1-2 (CCW SUP & RET)	DELETED-FROM SYSTEM	80A-B & D
CCW PUMPS & LO CLRS	DELETED-FI'S FROM SYSTEM	SHT-5
EMER AIR COMPR 1-1 (CCW SUP & RET)	DELETED-FROM SYSTEM	SHT-6
RES HT EXCH 1-2 (OUTLET)	ADDED-FI-85 & TX-201	63-C
CNT FAN CLR'S (OUTLET)	REVISED-FI-70,71 & 74 WERE FT'S	SHT-6
	ADDED-TI-99,100 & 101	
WASTE GAS COMPR 1-1 & 0-1	DELETED-FI'S & TI'S-636 & 637	62A & 63A-B
SEAL WTR.CLRS OUTLET	ADDED-TX-202 & TX-204	
REACT CLNT PP'S (OUTLET)	ADDED-FE'S TO SYSTEM	SHT 7
REACT VESS SUPPT'S (OUTLETS)	REVISED-TX'S-205,206,207 & 208 WERE TT'S	
B.A. & WASTE CONC'S	RELOCATED-HERE ON SHT 7"	SHT 8
	DELETED-TI'S & FI'S FR OUTLETS	
	ADDED-TX-212 & TX-215	

SYSTEM OR EQUIPMENT	DESCRIPTION	CO-ORDINATES
SAMP CHILLERS	RELOCATED-NOW ON P&I 102015	
SAMP HT EXCH'S (1-5,6&7) (OUTLET HDR)	ADDED-TX-217	88-B
SAMP HT EXCH'S (MAIN STM FD WTR,HT #2 & STM GEN)	RELOCATED-HERE ON SHT.8	SHT.-7A
	ADDED-TX-216 TO OUTLET HDR	
SEAL WTR.,LETDN, SPENT FUEL & EXCESS LETDN.HT EXCH'S (OUTLET)	DELETE-FI'S-98,99,100 & 101 TI'S-860,861,862 & 863	SHT.9
	ADDED-TX'S-218,219,220 & 221	
EMER AIR COMPR & AFT CLR 1-2 (CCW SUP & RET)	DELETED-FR SYSTEM	SHT 10
CENT CHG PP'S LO CLR'S (OUTLET)	ADDED-FI'S-260 & 261	
RES HT EXCH 1-1 (OUTLET)	REVISED-FI-88 WAS 228	109-C
	ADDED-FE-88 & TX-222	
CNT FAN CLRS (1-3 & 1-4) OUTLETS	REVISED-FI-73 & 72 WERE FT'S	108-C
	ADDED-TT-97 & 98	108-B
	CHANGE 014 APRIL 15, 1971 BY EP/MG/MLZ	
BASIC DIAGRAM	DELETED-PIPING QUALITY ASSURANCE TABLE AND TRANSFERED TO PIPING SCHEMATIC LEGEND 102001	SHEET.1
COMPONENT COOLING	REVISED-CALLOUT OF RE-16 TOVE-17A RE-16A TO RE-17B INSTRUMENTATION LINES 3177 & 3178 ARE CHANGED FROM K SPEC. & SIZE 2" TO S SPEC. & SIZE 3/8"	55-E 53-E
	-LOCAL RADIATION TAPS AT PUMPS' SUCTIONS TO RX'S	50-C
	ADDED-4" SIZES TO RECIRCULATION VALVES FCV-606,607,608	50,52, 53-D
MANUAL CHECK AND MOTOR OPERATED VALVES	DELETED-PG&E SPECIFICATION NUMBERS ITEM NUMBERS FOR SPEC.8729 ARE PLACED INSTEAD	SHEETS 5 TO 10
CHEMICAL ADDITION TANKS	REVISED-CHEMICAL INJECTION IS TRANSFERED FROM THE CCW PPS SUCTIONS TO CCW HEAT EXCHANGERS OUTLETS	50-E,D 40-E,C,B
DEMINERALIZED WATER MAKE-UP	ADDED-3" SIZES FOR LCV-69 & 70	56-B
COMPONENT COOLING WATER HEAT EXCHANGER	REVISED-CALLOUT OF TT-94 & 821 TO TE-6 & 7	58-E,D ON CHANGE 013
	DELETED-FT-68,69 & 65 THESE INSTRUMENTS WHICH HAVE THEIR TAPS RIGHT ON THE FE'S WILL APPEAR ON THE INSTRUMENT SCHEMATIC	99-E,D ON CHANGE 013
SAMPLE PANEL #2	DELETED-FROM SYSTEM	96-E,A. ON CHANGE 013
COMPONENT COOLING WATER PP 1-2 STUFFING BOX	REVISED-INLET AND OUTLET COOLING WATER LINE NUMBERS 2254 TO 1823 2255 TO 1824	53A-D 53A-B
CONTAINMENT FAN COOLERS 1-5,1-2,1-1	DELETED-FI-74, 71 & 70 THEY WILL BE SHOWN ON THE INSTRUMENT SCHEMATIC	67,68,69-C
WASTE GAS COMPRESSOR SEAL WATER COOLERS	REVISED-RELIEF LINE NUMBERS 312 TO 327 311 TO 328	60A-B 64A-B
REACTOR CLNT PUMPS THERMAL BARRIER CCW RETURN	ADDED-LINE NO. 1357	74-B
	REVISED- SIZE OF 3173 FROM 6" TO 4"	74-B
	DELETED-FI-84, FI-87, FI-91, FI-94, FI-90	70,72,73 & 75-C
REACTOR CLNT PUMPS LOWER BEARING	REVISED-INSTRUMENT NOS OF FI-85 & FI-88 TO FI-82 & FI-93	70,72-C
	ADDED-CCW RETURN HEADER LINE NUMBER 3179	73-B
	DELETED-FI-86, FI-89, FI-137, & FI-96	71,72,74 76-C
SAMPLE COOLERS	REVISED-CALLOUT FROM SAMPLE HEAT EXCHANGERS TO SAMPLE COOLERS	SHEET 7A
	ADDED-SC NOS.	
	DELETED-HEATER NO.2 DRAIN TANK SAMPLE COOLER	74A-C ON CHANGE 013
CONTAINMENT FAN COOLERS 1-4 & 1-3	DELETED-FI-73 & FI-72 THEY WILL APPEAR ON THE INSTRUMENT SCHEMATIC	108, 109-B ON CHANGE 013
MISC.SERVICE HEADER C	REVISED-FE-46 IS MOVED DOWNSTREAM OF FCV-355	80A-E

SYSTEM OR EQUIPMENT	DESCRIPTION	CO-ORDINATES
COMPONENT CLG.WATER PUMPS	ADDED FI-301,302,303 ON STUFFING BOX AND LUBE OIL CCW OUTLET HEADERS	51A,54A,56A-B
	-TI-1024,1025,1026 ON RETURN HEADERS B,C, & A	
COMPONENT CLG.WATER HEAT EXCHANGERS	ADDED-TI-895 & 898 ON CCW OUTLETS	58-E,D
CONTAINMENT FAN COOLERS	REVISED-TEMPERATURE TRANSMITTERS TO LOCAL TEMP. INDICATORS	
	TT99 TO TI-992	67-B
	TT100 TO TI-993	68 B
	TT101 TO TI-997	69 B
	TT98 TO TI-1011	108-B
	TT97 TO TI-1021	109-B
REACTOR COOLANT	REVISED-TEMP.TRANSMITTERS ON CCW OUTLET HEADERS TO LOCAL TEMP.INDICATORS	
	TT-925 TO TI-1002	73-A
	TT-926 TO TI-1004	74-A
REACTOR VESSEL	REVISED-TEMP. TEST POINTS TO TEMP. TRANSMITTER ON CCW OUTLETS	
	TX-205 TO TT-77	77-B
	TX-206 TO TT-78	78-B
	TX-207 TO TT-79	78-B
	TX-208 TO TT-	79 B
COMPONENT COOLING WTR. PUMPS	ADDED-CLEAN-UP STRAINERS AT PUMP SUCTIONS	50,52,54-D
SAFETY INJECTION PUMP 1-2 LUBE OIL & SEAL WTR. COOLERS	REVISED-SUPPLY AND RETURN HEADER TAPS FROM HEADER "B" TO HEADER "A"	107-D
CENTRIFUGAL CHARGING PUMPS LUBE OIL COOLERS	REVISED-SUPPLY AND RETURN HEADER TAPS OF PP1-2 FROM HEADER "A" TO HEADER "B" INLET VALVES ARE TO BE SUPPLIED BY MFR. PG&E VALVES ITEM 39 ARE REPLACED.	104-C
COMPONENT COOLING WATER-SURGE TANK	ADDED-TEMPORARY CONNECTION FOR SERVICE WATER SURGE TANK INITIAL FILL AT DEMINERALIZED WATER MAKE-UP	54-B
REACTOR COOLANT PUMPS	ADDED-WATER THERMAL EXPANSION BY-PASS CHECK VALVE AT OIL COOLERS CCW OUTLET HEADER	73-B
SAMPLE COOLERS	REVISED-WHOLE SHEET IS CHANGED FROM 7A TO 6B	SHEET 6B
VALVE ITEM IDENTIFICATION FOR SPEC. 8729	ADDED-TABULATION OF VALVES	SHEETS 11 & 12
	INSTRS INSTALL SPEC. ISSUED FOR BID 4802 MAY 10, 1971	
	CHANGE 1 APRIL /72 EP/PE/MG/MLZ	
	REDREW ALL SHEETS & REVISED AS LISTED BELOW	SHTS.1-10
REDREW SHEETS COMPARISON	OLD: 2, 3, 3A, 3B, 3C, 3D, 3E, 4(DELETED), 6A, 6B, 11, 12 — NEW: 2, 3, 4(RE-USED), 6A, DELETED	
BASIC DIAGRAM	ADDED - NOTES 1,2,3	SHT.1
	ADDED UNIT 2 MECH. PIPING AREA DWG. NOS.	SHT.1
	ADDED-CHECKER'S SIGNATURE FOR INSTRUMENT, LINE NOS. AND VALVES	SHT.1
	REVISED-TITLE DESCRIPTION TO COMP. COOLING WATER SYSTEM, WAS COMP. COOLING SYSTEM	SHT.1
	RELOCATED-TABLE OF CHANGES PRELIMINARY DWG 01-014 DESIGNER, CHECKER & ENGR. INITIALS TO SHEET 2 & 3	SHT.1
NORMAL OPERATION, MAXIMUM COOLDOWN, & START & RECIR. DIAGRAM	DELETED FROM SYSTEM	SHEET 4
CCW PP 1-1 SUCTION	REVISED-PI-581 TO PX-210 AND MOVED TAP UPSTREAM OF STRAINER SPOOL	50-D
	ADDED-EXPANSION JOINT & EXPANSION JOINT ISOLATION VALVE ITEM 26	50-C
	DELETED NOTE 6 ON START-UP STRAINER	50-C
CCW PPS 1-2,1-3 SUCTION	REVISED-PI-583,585 TO PX 211,212 AND MOVED TAP UPSTREAM OF STRAINER SPOOL.	(52-54)-D
	DELETED-NOTE 6 ON START-UP STRAINER	(52-54)-D
CCW PP 1-1,1-2, 1-3 DISCHARGE	ADDED-DRAIN CONN. & VALVE ITEM 42	(50-54)-D
	REVISED-INST. SYMBOL & NUMBER TO FS 66, 67,68 WAS PS 274,275,276	(51-55)-D

SYSTEM OR EQUIPMENT	DESCRIPTION	CO-ORDINATES
CCW PPS DISCHARGE HDR. A & B RADIATION INST. RE 17A, 17B TAPS.	REVISED-MANIFOLDING SEQUENCE RE 17A ON HDR. A & RE 17B ON HDR B.	55-(D-E)
CCW PP 1-1,1-2, 1-3 RECIRC. LINE	REVISED-LINE SIZE TO 4" DOWNSTREAM OF FCV 606, 607 & 608 AND ADDED NEW LINE NOS 1575, 1576 1577	(50-54)-D
RETURN HDR.A,B,C (LN 81,82,2282) SHEET 5 ONLY	REVISED-RADIATION INST.RX 1,2,3 FUNCTION TO RADIATION & LOCAL SAMPLE TAPS, WAS RADIATION SAMPLE TAP	57-A
	REVISED-TEMP.INST.NO.TO TI-530,531, 532, WAS TI-1024,1025,1026	54-A
	REVISED-TEMP.INST. SYMBOL TO TE 18, 19,22 WITH COMPUTER INPUT NO.	54-(A-B)
CCW SURGE TANK	REVISED-INLET LINES 121 & 123 PIPING MANIFOLDING SEQUENCE ON HEADER A & B TO U-STREAM OF INST. RX 1,2,3.	57-(A-B)
	DELETED-LOCAL SAMPLE TAPS ON INLET LINES 121 & 123	57-(A-B)
	ADDED-ROOT VALVE FOR LEVEL INDICATOR LI-136, 138	(56-57)-B
	REVISED-REQUIREMENT NO. TO PGE REC. DC-663225-2	56-B
CHEM. ADDITIVE TANKS 1-1,1-2	ADDED-MFR. DWG. RECORD NO.DC-663013-1	54-D
	ADDED-PRESSURE INDICATOR PI 112 & 110 ON INLET LINE.	56-(D-E)
	REVISED-OUTLET PIPING MANIFOLDING SEQUENCE ON HEADER A & B.	58-(D-E)
CCW HT. EXCH. 1-1, 1-2	ADDED-2" VENT LINE & ROOT VALVE ITEM 39	57-(D-E)
	ADDED-PRESSURE GAUGE PI-111 & 113 ON INLET LINE	56-(D-E)
	REVISED-TEMP. INST. SYMBOL TO TE 4,5 WITH COMPUTER INPUT NO.	56-(D-E)
SUPPLY HEADER X-TIE (LN.98)	REVISED-PRESSURE SWITCH INST.NO.TO PS-190, 191 WAS PS-190A,191A	58-(D-E)
NOTES 2,3,5,6 (SHEET 5)	DELETED-FROM THIS SYSTEM AND REFERRED TO LEGEND DWG.102001 SHEET 1	(51-58)-A
NOTE 3	REVISED-RE: SEE NOTE 1 FOR CHEM.ADD. TANK INLET PRESS.	60-A
	REVISED-OUTLET LINE CONTROL VALVE FCV 430, 431 OPERATOR TO MOTOR WAS DIAPHRAGM	58-(D-E)
CCW PPS STUFFING BOX & L.O. COOLER SYSTEM	REVISED-RETURN HDR.LN 2132,2133 MANIFOLDING SEQUENCE ON HDR. A & B	50A-B
	ADDED-UNIT 2 MFR.DWG.REC.NO.DC-663213-2	55A-A
	DELETED-NOTE 1 FROM THIS SHEET AND REFERRED TO SHEET 1 AS A GENERAL NOTE	50A-A
RHR HT. EXCH. & PP SEAL COOLER 1-2	REVISED-INLET & OUTLET LN.94 & 99 MANIFOLDING SEQUENCE ON HDR. B SUPPLY & RETURN	60-(B-D)
	REVISED-RHR HT.EXCH.FLOW INST.TO AN ELBOW TAPS, FI-85 WAS FLOW ELEMENT FE 85, AND RELOCATE FLOW INST. ON INLET LINE, WAS ON OUTLET AND ADDED NOTE 1	60-C
	ADDED-NOZZLE ITEM 0 ON SEAL COOLERS	
NOTE 1	REVISED-REUSED NOTE 1 FOR FI-85 AND OLD NOTE 1 REFERRED TO SHEET 1 AS GENERAL NOTE	60-A
CENTRIFUGAL CHARG. PP 1-2 PACKAGE COOLER	REVISED-INLET & OUTLET LN.2356 & 2357 MANIFOLDING SEQUENCE ON HDR. B SUPPLY & RETURN	63-(B-C)
CONT.FAN COOLER COIL & MOTOR HT.EXCH.1-1, 1-2, 1-5	ADDED-VENT CONN. & ROOT VALVE ITEM 13.5 TO COIL INLET & OUTLET LINE	(67-69)-C
	REVISED-WTR. HT. EXCH. INLET & OUTLET STATUS TO 3.0 (SEALED OPEN) WAS L.O. (LOCKED OPEN)	(67-69)-C

E | D | C | B | A

P. G. & E. CO.	1020.4	CHANGE 10
SHEET 5 OF 10 SHEETS		

RM INDEXED REV 10

SYSTEM OR EQUIPMENT	DESCRIPTION	CO-ORDINATES
	ADDED-NOTE ON ITEM 3 SHUT-OFF VALVE ON INLET & OUTLET LINE TO DENOTE SPEC. RATING BOUNDARY	(67-69)-(B-D)
WASTE GAS COMPR. SEAL WTR. COOLER 1-1, 0-1	ADDED-1 1/2" COOLER NOZZLE SIZE	61A-(C-D)
SAMPLE PANEL 1-1 COOLERS	REVISED-SHOWED 9 COOLING COILS AS PART OF SAMPLE PANEL 1-1 PACKAGE.	65A-C
	REVISED-INLET & OUTLET LN. SIZE TO 2" WAS 3" AND SHUT-OFF VALVE ITEM 39, WAS ITEM 34.	65A-D
	REVISED-INLET LN.3249 MANIFOLDING SEQUENCE TO HDR.C SUPPLY	65A-D
	DELETED-MAIN STM LEAD 1,2,3,4 SAMPLE COOLERS INLET AND OUTLET LINE 3254,3256,3258,3260, 3255,3257,3259,3261,(FEEDWTR. SAMPLE COOLER INLET & OUTLET LN.3264 & 3267. STM GEN.1,2, 3,4 BLOWDOWN SAMPLE COOLER INLET & OUTLET LN.2326,2328, 2330,2332,3265,2327,2329, 2331,2333.	SHEET 68
	DELETED-9 SAMPLE COOLER RELIEF VALVE RV 190,191,192,193,328,329, 330,331,333	SHEET 68
NOTE 1 (SHEET 64)	DELETED-FROM THIS SHEET AND REFERRED TO SHEET 1 AS GENERAL NOTE 1	60A-A
SHEET 7A	DELETED-FROM SYSTEM	SHEET 7A
REACTOR COOLANT PPS.	ADDED-3/4" THERMAL EXPANSION BYPASS LINES W/CHECK VALVES (ITEM 79) AROUND FCV 749 & 750, ON CCW RETURN HDRS.	73-B
	REVISED-SPEC K & K2 BOUNDARY TO DOWNSTREAM OF SUPPLY HEADER VALVE FCV 356, WAS UPSTREAM OF FCV 356.	72-E
	REVISED-RETURN HEADER ISOLATION VALVE FCV 750 & 357 OPERATOR SYMBOL TO MOTOR, WAS DIAPHRAGM	73 A,B
	DELETED-RETURN HEADER LINE 3173	73 B
	ADDED-LINE NO.3744,3745,3746,3747 ON THERMAL BARRIER CCW. INLET.	(70 74)-D
REACTOR VESSEL SUPPORT COOLERS	ADDED-BIOLOGICAL SHIELD BOUNDARY & COOLING PLATE SYMBOL	(70-77)-(B-E)
	ADDED-PHYSICAL ARRANGEMENT	(76-79)-(C-D)
	REVISED-RETURN LINE HEADERS VENT CONN. SHUT-OFF VALVE ITEM 51 WAS ITEM 42	(75-77)-C
	REVISED-SUPPORT CLR. RETURN LINES SIZE 1 1/2", WAS 1" (NOS.389, 391,392,393,394,395,396,430, 1695,1696,1697,1698,1699,1700, 1701,1702)	
NOTE 1 (SHEET 7)	DELETED-FROM THIS SHEET & REFERRED TO SHEET 1 AS GENERAL NOTE 1	70-A
AUX.STM.DRAIN RECEIVER VENT CONDENSER	ADDED-LINE NO.3480 & 3484 TO SUPPLY & RETURN HEADER	83-(C-D)
	ADDED-NOZZLE ITEM NO.A & B ON INLET & OUTLET	83-C
WASTE CONCENTRATION PACKAGE 0-1	ADDED-NOTE 1, FOR EVAP CONDENSER RETURN LINE CONTROL VLV FCV 1307.	
NOTE 1 (SHEET 8)	REVISED-REUSED NOTE 1 FOR WASTE CONCENTRATOR (SEE ABOVE). OLD NOTE 1 WAS REFERRED TO SHEET 1 AS GENERAL NOTE 1	85 B
GROSS FAILED FUEL DETECTOR H.X.	ADDED-TO SYSTEM	
NSSS SAMPLE HX	REVISED-INLET & OUTLET HEADER SIZE TO 3" (LN. 3267, 3268) WAS 2"	87-B 87-D
	REVISED-INLET & OUTLET SHUT-OFF VALVE ITEM 34, WAS ITEM 39.	87-B 87-D
NOTE 1 (SHEET 9)	DELETED-NOTE 1 FROM THIS SHEET AND REFERRED TO SHEET 1 AS A GENERAL NOTE	90-A
EXCESS LETDOWN HT. EXCH.	ADDED-DRAIN CONN. & SHUT-OFF VLV.ITEM 42 TO SUPPLY & RETURN HDR.(LN 144, 145)	96-B 96 E
RHR HT. EXCH. & PP. SEAL COVER 1-1	REVISED-RHR HT. EXCH. FLOW INST. TO AN ELBOW TAP FI 88 WAS FLOW ELEMENT FE 88 AND RELOCATE FLOW INST. ON INLET LINE WAS ON OUTLET, AND ADDED NOTE 1	104 D

SYSTEM OR EQUIPMENT	DESCRIPTION	CO-ORDINATES
NOTE 1	REVISED-REUSED NOTE 1 FOR FI-88 AND OLD NOTE 1 REFERRED TO SHEET 1 AS GENERAL NOTE	100-A
CONT. FAN. COOLER COIL & MOTOR HT.EXCH. 1-3, 1-4	ADDED-VENT CONN & ROOT VALVE ITEM 13,8 TO COIL INLET & OUTLET LINE	(107-109)-E (107-109)-B
	REVISED-HTR.HT.EXCH.INLET & OUTLET VALVE STATUS TO S.O.(SEALED OPEN) WAS L.O. (LOCKED OPEN)	(107-109)-C
	ADDED-NOTE ON ITEM 3 SHUT-OFF VALVE ON INLET & OUTLET LINE TO DENOTE SPEC. RATING BOUNDARY.	(107-109)-E, (107-109)-B
VALVE ITEM I.D. FOR SPEC.8729 TABLE	DELETED-FROM THE SYSTEM AND REFERRED TO A NEW DWG.LIST FOR CLASS 1 VALVE (DWG.102033)	SHEET 11 & 12
DWG.102014 CHANGE 2 12-11-72	H L.ZIONCK/P.E.ISAAC/L MANALAC	
CCW PPS DISCH.	REVISED-ITEM 41 DRAIN VALVES WERE ITEM 42 & TAPS OF FLOW SWITCHES (FS-46,67 & 68) RELOCATED UPSTREAM OF RECIRCULATION LINES	51,52 54 D
RETURN HDR "B"	ADDED-EXPANSION JOINT DESIGNATION (ITEM 8) AND RECORD DWG NO.	50 C
CCW SURGE TANK DEMIN. WATER MAKE-UP	ADDED LINE NOS 3301 & 3302 TO CCW SURGE TANK MAKE-UP DUE TO CHANGE IN PIPE SIZE	56-A
CCW SURGE TANK	REVISED-LEVEL INSTRUMENT VALVES,ITEM 41 WERE ITEM 42	56-B
CHEM.ADDITION TANKS	ADDED-EQUIP.NOS. ON TANKS CORRESPONDING TO UNIT 2	56-E,D
RETURN HDRS A,B,&C	ADDED-ITEM 43 VALVES ON RETURN HEADER TAP LINES FOR LOCAL WATER SAMPLE & RADIATION TESTS	57-A
	DELETED RADIATION TEST CALL-OUTS (RX-1, 2,3)	57-A
	REVISED-TI-530,531&532 MOVED UPSTREAM OF COMPUTER INPUT (TE-18,19,22) TAPS	58-A
CCW H X.1-1,1-2	DELETED-EQUIP.DRAIN LINE NOS.2379,2388 2389,& 2330	57-E
SUPPLY HDRS."A"&"B"	ADDED-ITEM 51 VENT VALVES AT H.X.1-1 & H X.1-2	56-E,D 58-E,D
SUPPLY HDR CROSS-TIE	ADDED-ITEM 51 VENT VALVE ON LINE NO 96	58-E
MISC.SERVICE SUPPLY HDR. "C"	ADDED DRAIN LINE WITH ITEM 41 VALVE ON LINE 2277	58-E
MISC.SERVICE SUPPLY HDR."C"	REVISED-DRAIN VALVE ON LINE 2277 MOVED DOWNSTREAM OF FE-46	50-A-E
CCW PPS.STUFFING BOXES	ADDED-SIZE DESIGNATION (1/2") ON NOZZLES "C" & "D"	52A,54A 56A-C
CCW PPS L.O COOLERS	REVISED-TERMINATION OF L.O. COOLER DISCH LINES 1887,1792,&1766,MOVED DOWNSTREAM OF FLOW INDICATORS.	52A,54A,56A B
	ADDED-PG&E RECORD NO.ON L.O. CLRS.	53A-C
RESIDUAL H.X.	REVISED-CALL-OUT OF RESIDUAL H X. WAS RHR H X.	60-A
SAFETY INJECTION PP.1-1 COOLERS	REVISED-CROSS REFERENCE ON HEAT EXCHANGERS CHANGED TO NOTE 2&3	64,66-C
RCFC	ADDED-WORD "REACTOR" TO COMPLETE EQUIP. CALL-OUT -CROSS REFERENCE ON RCFC COOLING COILS	67-A 67,69 C
CENTRAL SAMPLE	ADDED-WORD "CENTRAL" TO COMPLETE CALL-OUT	65-A C
	REVISED-EQUIP RECORD NO DC-663106-5 WAS DC-663106-10	65A-A
	REVISED-RELIEF VALVE,RV-151,WAS RV-154	65A-B
R C PUMPS	ADDED-THERMAL BARRIER CCW RETURN LINE RELIEF VALVE INLET LINES,3989,3990, 3991 & 3992.	70,72,73 74-D
	ADDED-CLASS CODE BOUNDARY OR RELIEF VALVE, RV-51 DISCHARGE LINE 1631	72-C
	REVISED-PIPING SPEC OF ITEM VALVES (FCV-749 & FCV-363) FROM "V2" TO "K"	72-B
RCP 1-2	ADDED-DRAIN LINE WITH ITEM 42 VALVE ON OIL COOLER CCW RETURN LINE 2304	71 C
	ADDED DRAIN LINE WITH 41 VALVE ON THERMAL BARRIER CCW RETURN LINE 2313	71-C
	REVISED-THERMAL BARRIER CCW SUPPLY LINE 2302 WAS TAPPED AT LINE 2298,NOW AT LINE 135	70 D
RCP 1-3	ADDED-DRAIN LINE WITH "HOLD" ON VALVE ON LINE 2342	71-C
RCP 1-4	REVISED-DRAIN ON LINE 2300 MOVED DOWNSTREAM OF CHECK VALVE TO LINE 3745, "HOLD" SUBSTITUTED FOR VALVE ITEM NO	73-D
RCP 1-3,1-4	REVISED LOWER BEARING OIL COOLER CCW SUPPLY LINES 140 & 141 WERE TAPPED TO LINES 2211 & 1960,RESPECTIVELY,NOW AT LINES 136 & 137,RESP.	72-D

SYSTEM OR EQUIPMENT	DESCRIPTION	CO-ORDINATES
	ADDED DRAIN LINES WITH "HOLD" ON VALVES ON CCW RETURN LINES 2342 & 2343	72 C
RCP 1-1	REVISED LOWER BEARING OIL COOLER CCW SUPPLY LINE 138 WAS TAPPED TO LINE 2297; NOW AT LINE 134	74-D
	REVISED DRAIN LINE ON LINE 2297 WAS TAPPED ON LINE 2299.ITEM 41 VALVE WAS 42	75 D
AC PUMPS	REVISED TEST CONNECTION (TC) ON LINE 133 MOVED DOWNSTREAM OF LINE 2315 TAKE-OFF	72 E
SUPPLY HDR	REVISED-ITEM 10 VALVE FROM CODE CLASS "C" TO CODE CLASS "B"	72 E
	REVISED PIPING SPEC OF ITEM 4 CHECK VALVE FROM "K2" TO "K" AT LINE 180	72E
REACTOR VESSEL SUPPORT COOLERS	REVISED FOUR DRAIN VALVES FROM ITEM 42 TO ITEM 41, & MOVED FROM UPSTREAM OF SUPPLY VALVE ITEM 40 TO ITS DOWNSTREAM SIDE AT LINES 2316,2318, 2320,2322	75,76, 77-E
	ADDED-EQUIVALENT UNIT 2 COOLING PLATE NOS.	75,76, 77-E
	REVISED-ITEM 41 DRAIN VALVES ON COOLING PLATE CCW RETURN LINES AT 6"x9" SPOOLS WERE ITEM 42	75,76 77 C
GROSS FAILED FUEL DETECTOR H X.	REVISED HEAT EXCHANGE AND CCW LINES TRANSFERRED FROM CCW SUPPLY LINE 3267 & RETURN LINE 3268 ON SHEET 8 TO LINES 133 & 143,RESPECTIVELY	73-D
	REVISED RELIEF VALVE,RV-192,WAS RV-195	73-D
COOLING PLATE SUPPLY & RETURN HDR	DELETED-CAPS ON CCW LINES 232262323	73 E,C
BA EVAP CONDENSER	REVISED-RELIEF VALVE,RV-304,DISCHARGE LINE 3764 TERMINATION MOVED FROM 1760 TO LINE 2341	80-B
BA SAMPLE COOLER	ADDED SAMPLE COOLER & CCW LINES ARE TAPPED TO LINES 2312 & 2341	82-D
AUX STEAM DRAIN RECEIVER VENT COND.	ADDED-INSULATION ON LINE 3036	83-C
WASTE CONCENTRATOR, EVAP CONDENSER	REVISED RELIEF VALVE,RV-305,DISCHARGE LINE 3765 TERMINATION MOVED FROM LINE 1760 TO LINE 151	84-B
WASTE CONCENTRATOR SAMPLE COOLER	ADDED-SAMPLE COOLER & CCW LINE ARE TAPPED TO LINES 150 & 151	86-D
NSS SAMPLE H X.	REVISED-CCW SUPPLY & RETURN LINE ROOT VALVES WERE ITEM 34	87-D
	REVISED SIZE OF CCW SUPPLY & RETURN LINES 3267 & 3268 WAS 3"	87-D,B
WASTE CONCENTRATOR & BA EVAPORATOR PACKAGE CLRS.	REVISED-CCW LINES CONNECTIONS TO H.X. NOZZLES WERE ON SHELL SIDE	80,82-C 85,86 C
HEADER "C" COMPONENTS	ADDED-VENT VALVES (4) MARKED ITEM 51 DRAIN VALVES (4),MARKED ITEM 42,ON SEALWATER LETDOWN,SPENT FUEL PIT & EXCESS LETDOWN HEAT EXCHANGERS ON SHELL SIDE	91,93,96 98 C
EXCESS LETDOWN H.X. 1-1	REVISED-DRAIN & TEST VENT VALVES MARKED ITEM 42 ON CCW SUPPLY & RETURN LINES 144 & 145 WERE ITEM 41,	98-D,B
STEAM GENERATOR BLOWDOWN RADIOACTIVE SAMPLE PANEL COOLERS	ADDED-HEAT EXCHANGER CCW SUPPLY & RETURN LINES TAPPED TO LINES 152 & 153,RESPECTIVELY	95-C
EXCESS LETDOWN 1-1	REVISED-PIPING SPEC CHANGE MOVED FROM UPSTREAM TO DOWNSTREAM OF CHECK VALVE MARK ITEM 5,RATED AT 150#	98-D
CENTRIFUGAL CHARGING PP 1-1	ADDED-LINE SIZE & SPEC.OF LINE AT UPSTREAM OF ROOT VALVE (ITEM 39)	100-E,A
RESIDUAL H.X. 1-1 AND RHR SEAL WTR CLR.1-1	ADDED-VENTS WITH ITEM 51 VALVES ON SHELL SIDE OF EQUIP.	104-C
SAFETY INJECTION PP L.O & SEAL WTR.CLRS.	ADDED-NOTES 2&3 WITH CROSS REFERENCE ON L.O. COOLER DELETED	106-D
REACTOR CONT.FAN COOLERS (RCFC)	ADDED-CROSS REFERENCE ON COOLING COILS & FAN MOTOR H.X.'S ADDED THE WORD "REACTOR" TO EQUIP.NOMENCLATURE	108-C
	DELETED-CAP ON RCFC 1-1 SUPPLY LINE 3261	108-C
CHANGE 3	5-18-73 E.ISAAC/L.MANALAC/H.ZIONCK	
CCW PPS.STUFFING BOX & L.O.COOLERS	ADDED-FOUR ROOT VALVES (ITEM 39) TO CCW PUMP COOLER SUPPLY & RETURN HEADERS 2129,2132,& 2133,[illegible]	50-C 54-C 50-A-E 58-A-D
CENTRAL SAMPLE PANEL 1-1	ADDED DRAIN CONNECTION TO SUPPLY LINE 3249 [illegible]	65A-D
DEMIN WTR.MAKEUP	ADDED LINE NOS.3901 & 3902 FOR HANGER REQUIREMENTS ON UNIT 1 ONLY [illegible]	55-B (55-A)
RESIDUAL H.X. 1-2	REVISED-SINGLE TAP FOR FI-85 INCREASED TO TWO TAPS	60-C
CHANGE SHEETS [illegible]	[illegible]	

SYSTEM OR EQUIPMENT	DESCRIPTION	CO-ORDINATES
CENT.CHARGING PP.1-2 COOLERS	ADDED-DRAIN CONNECTION ON SUPPLY LINE 2356 ITEM 42 valve	63-D
SAFETY INJECTION PP. 1-1	ADDED-VENT CONNECTION ON DISCHARGE LINE 311 ITEM 51 VALVE	65-C
REACTOR COOLANT PP.1-2	REVISED-VENT LINE ON UPPER BEARING OIL DISCHARGE LINE 2304 WAS MOVED FROM LINE 135	71-D
RCP #4,UNIT 1	REVISED-UNIT 1 DRAIN LINE ON LINE 3745 MOVED TO LINE 2300 DRAIN VALVE IS NOW DESIGNATED ITEM 42	72-D
REACTOR VESSEL SUPPORT CLRS. 1-3/2-2	DELETED-CCW DISCHARGE LINE 2321-LINE TOO SHORT	76-C
RVS COOLERS	REVISED-ITEM 49 THROTTLE VALVES WERE ITEM 50	75,76,77C
B.A.EVAP. & WASTE CONC.SAMPLE CLRS.	ADDED-P.G.& E. EQUIPMENT RECORD NOS.,H E. NOZZLE SIZE & EQUIPMENT SPECIAL TAG NOS.(SC-47,SC-48)	82,87-D
	ADDED-NOZZLE SIZE (1/2") AND EQUIPMENT SPECIAL TAG NUMBERS (SC-47,SC-48)	82-87-D
STEAM GENERATOR BLOWDOWN SAMPLE CLRS.	REVISED-NOZZLE & LINE SIZE OF SAMPLE COOLERS WAS 1" & ITEM 42 VALVES WERE ITEM 41	94,95
	ADDED-P.G.& E. EQUIPMENT RECORD NO.	94-A
	ADDED PIPE MATERIAL SPEC.BOUNDARY AT SUPPLY & RETURN VALVES	94,95-C
EXCESS LETDOWN H.X	[illegible]-DRAIN VALVE,ITEM 42,WAS ITEM 41	98-D
	REVISED-NOZZLE SIZE (3/4") ON LINES 144 & 145 FOR TEST VENT & DRAIN APPLIES TO UNIT 1 ONLY (1" ON UNIT 2)	98-D,B
	REVISED-VENT AND DRAIN VALVES ON H.X.SHELL WERE ITEMS 51 & 42 RESPECTIVELY	98-C
HEADER "A"	REVISED-NOZZLE SIZES FOR UNITS 1 &2 ARE 3" & 2" RESPECTIVELY	100-E,A
RESIDUAL H X.-1	DELETED-VENT LINE ON H.X. SHELL SIDE ALREADY INCORPORATED IN THE RESIDUAL HEAT REMOVAL SYSTEM	104-C
HEADER "A"	ADDED-VENT LINES ON RETURN LINES 2355,127 & "1"	100-A 104-A 105-B
CHANGE 4	11-13-73 P.ISAAC/L.MANALAC/H.ZIONCK	
CCW PPS.	ADDED-PUMP CASING DRAIN CONNECTIONS WITH 6 ITEM 42 VALVES	50,52, 54-E
CCW PP. DISCH.	DELETED-DRAIN CONNECTIONS ON LINES 89,90, & 91 (WITH 3 ITEM 41 VALVES)	51,52, 54-E
CCW PP.	ADDED-DRAIN CONNECTION (WITH ITEM 42 VALVE)ON STUFFING COOLING WATER HEADER LINE 2132	53-C
CCW HX 1-2	DELETED-DRAIN CONNECTION (WITH ITEM 42 VALVE) ON HX INLET LINE 96	56-D
CCW SURGE TANK	REVISED-LEVEL GAUGE SHUT-OFF VALVE ITEM 42 WAS ITEM 41 ON LI-136 & LI-138	56,57-B
CCW HX	REVISED-VENT CONNECTIONS ON NOS. 5 & 6 NOZZLES MOVED TO PIPE SIDE	56-E,D
HEADER C	DELETED-DRAIN CONNECTION ON LINE 2277 (ITEM 41 VALVE)	58-D
CCW HX	ADDED-DRAIN CONNECTIONS ON HEADERS "A" & "B" (ITEM 42 VALVES, TOTAL = 2)	58-E,D
HEADER B	ADDED-DRAIN CONNECTION ON RETURN LINE 2133 (ITEM 42 VALVE)	56A-B
RHR HX	REVISED-FI-85 MOVED DOWNSTREAM OF ITEM 29 VALVE ON LINE 94	60-D
RHR PP. SEAL WTR CLR	ADDED-METALLIC EXPANSION JOINTS ON LINES 100 & 122 & VENT CONNECTION (WITH ITEM 51 VALVE) ON SHELL SIDE	61-C
CENTRIFUGAL CHARGING PP. COOLERS	ADDED-DRAIN CONNECTIONS FOR LINES 3273, 3274, 3275, 3276 & 2357 (WITH ITEM 42 VALVES, TOTAL = 4)	63,64-C
SIS PUMP COOLERS	ADDED-VENT & DRAIN CONNECTIONS (WITH ITEMS 51, 81 & 42 VALVES, RESP.) ON LINES 310 & 1927	65-C

14

CONTINUE ON SHT-11

P. G. & E CO.	102014	CHANGE 10
SHEET 4 OF 14 SHEETS		

RM INDEXED REV 10

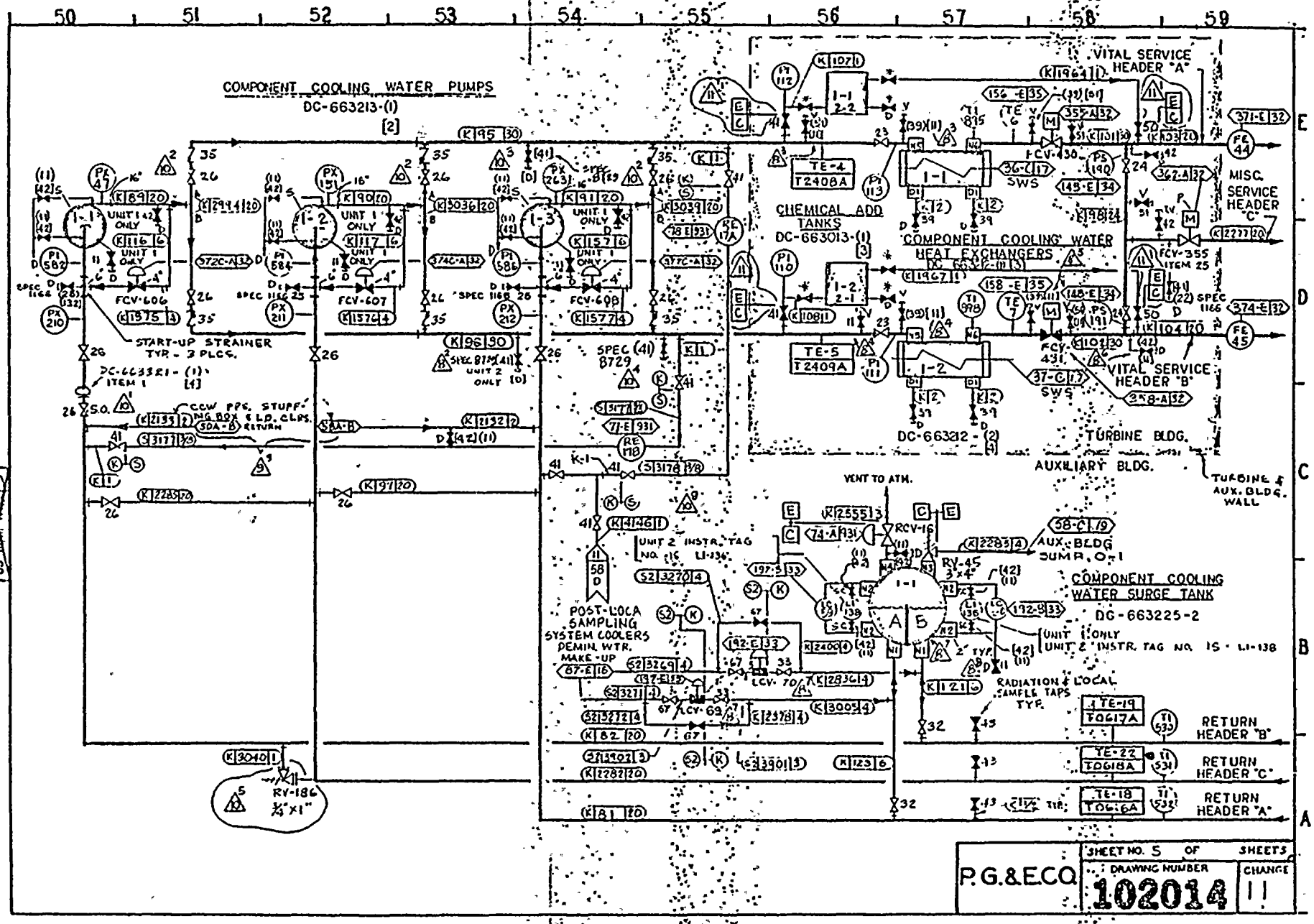

RM INDEXED REV 11

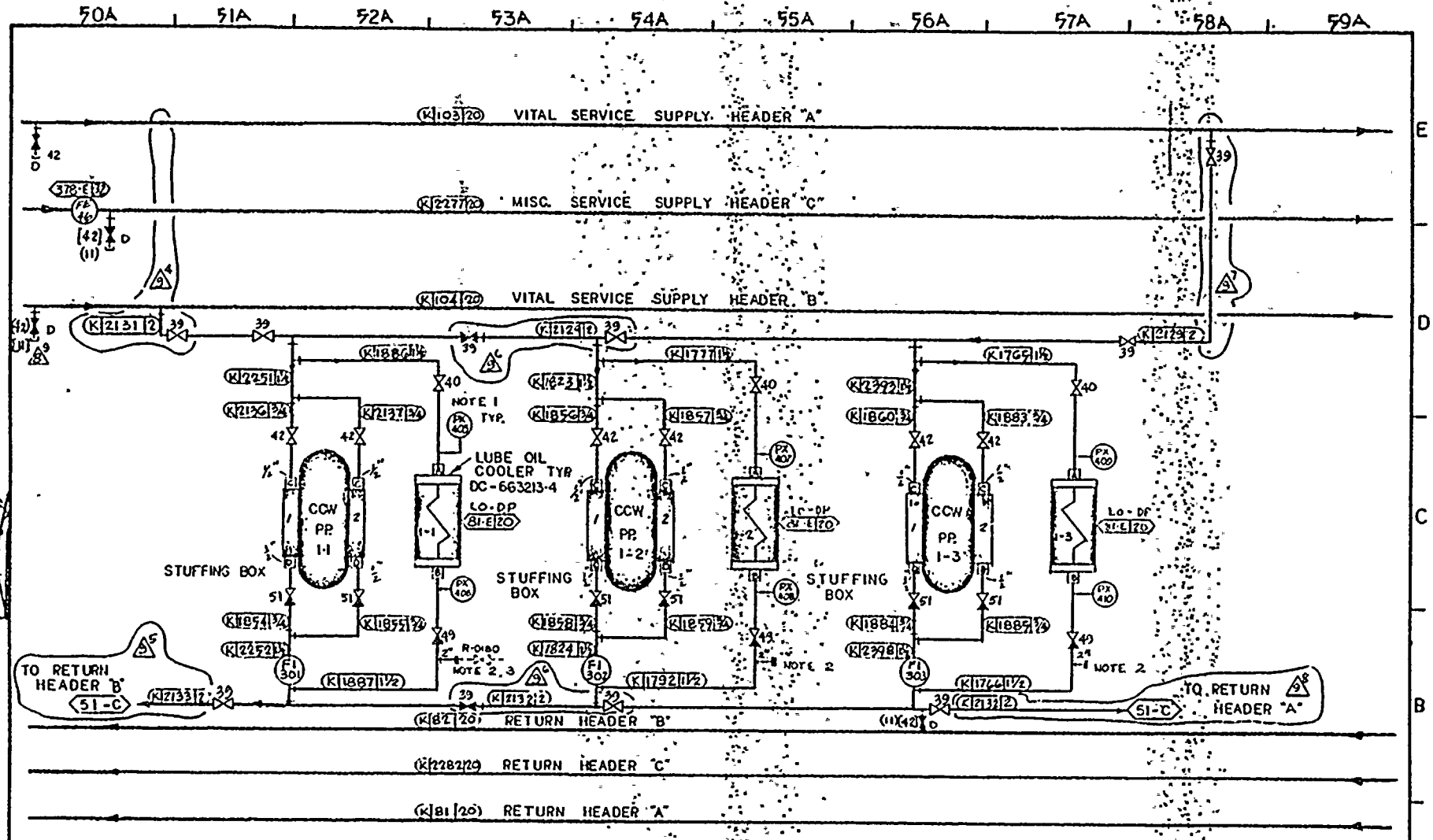

COMPONENT COOLING WATER PUMPS COOLING REQUIREMENTS DC-663213 (1) (2)

NOTES:

1. PXS TO BE LOCATED WITHIN 1' OF HEAT EXCHANGER (53A-D)
2. LOCATE FLANGE FOR EASY CONNECTION OF TEMPORARY VALVE AND PRESSURE TEST GAGE. REPLACE WITH BLIND FLANGE AFTER TEST (53A-D)
3. VALVE IS NON-CLASS I. 2" BALL VALVE WITH 2" FLANGE AT ONE END AND 2" MALE NIPPLE AT OTHER END. ONLY ONE VALVE WILL BE USED AT SEVERAL

3 (CONT.) TEST POINTS. REMOVE VALVE PRIOR TO OPERATION. SYS. IS CLASS I (53A-B)

P.G.&E.CO.	SHEET NO. 5A OF 5 SHEETS	
	DRAWING NUMBER 102014	CHANGE 10

RM INDEXED REV 10

35 MIN REC.

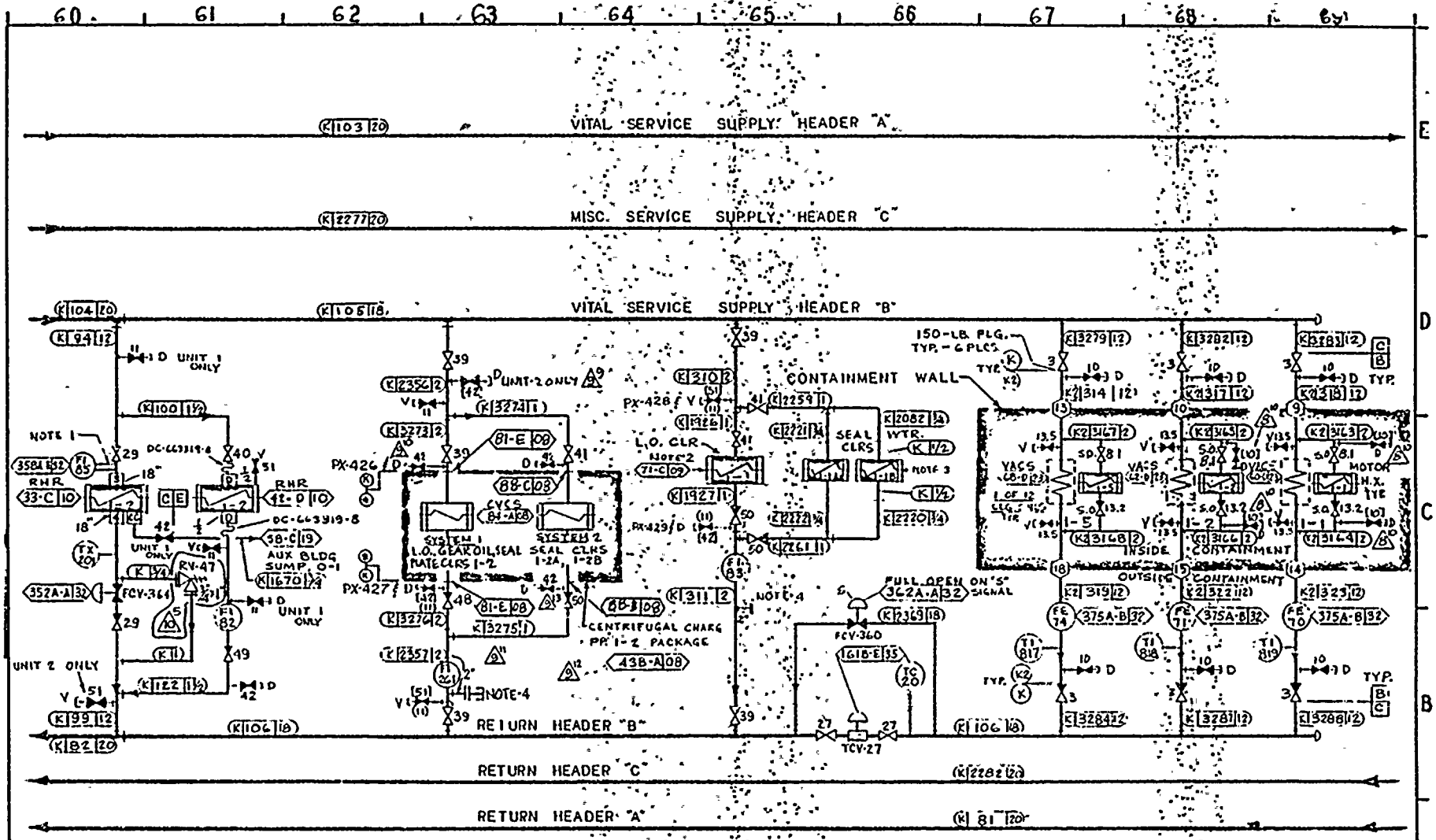

RM INDEXED REV 10

RM MTR FIC. 10

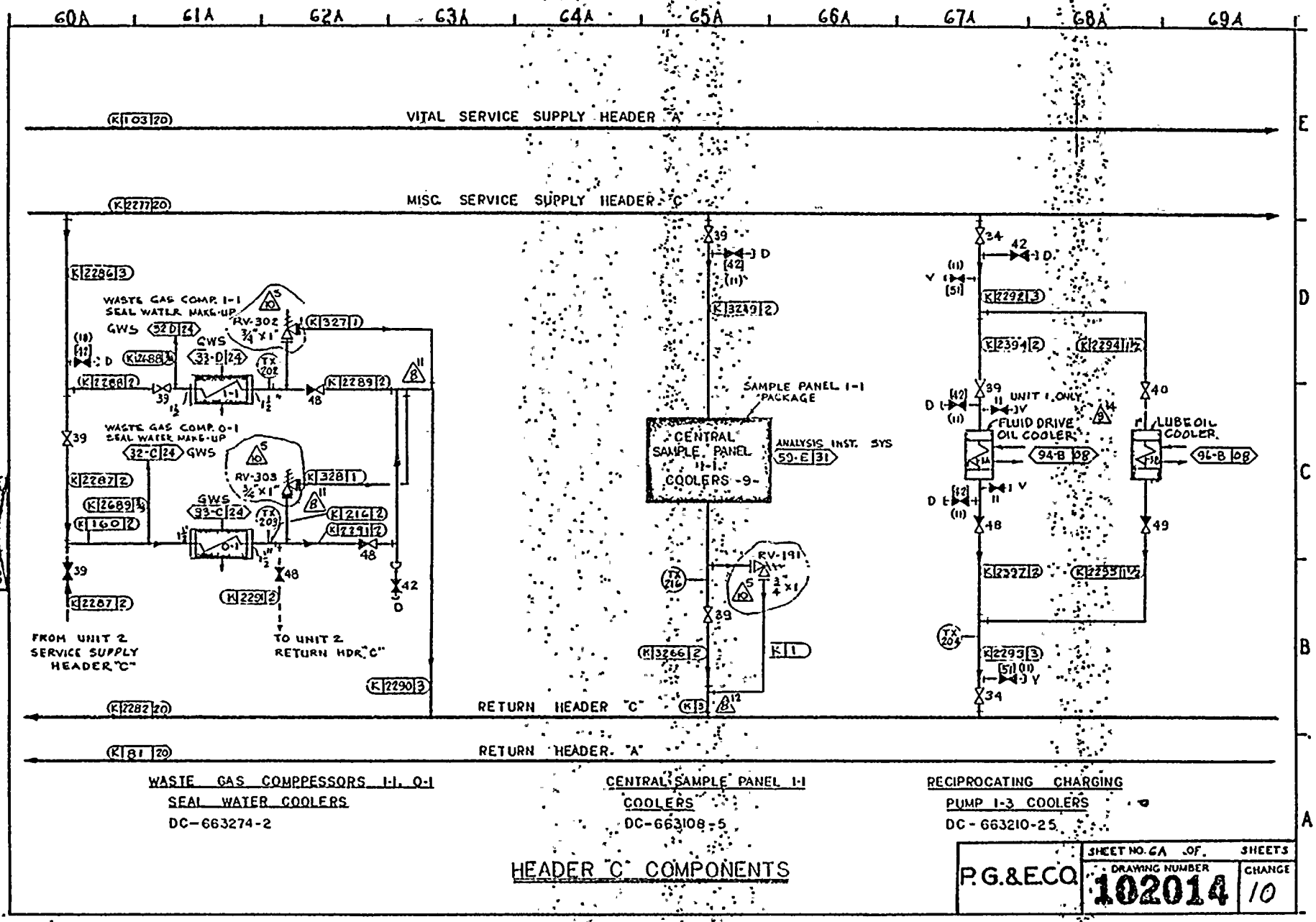

RM INDEXED REV 10

35 MIN REC

6 MIN REC

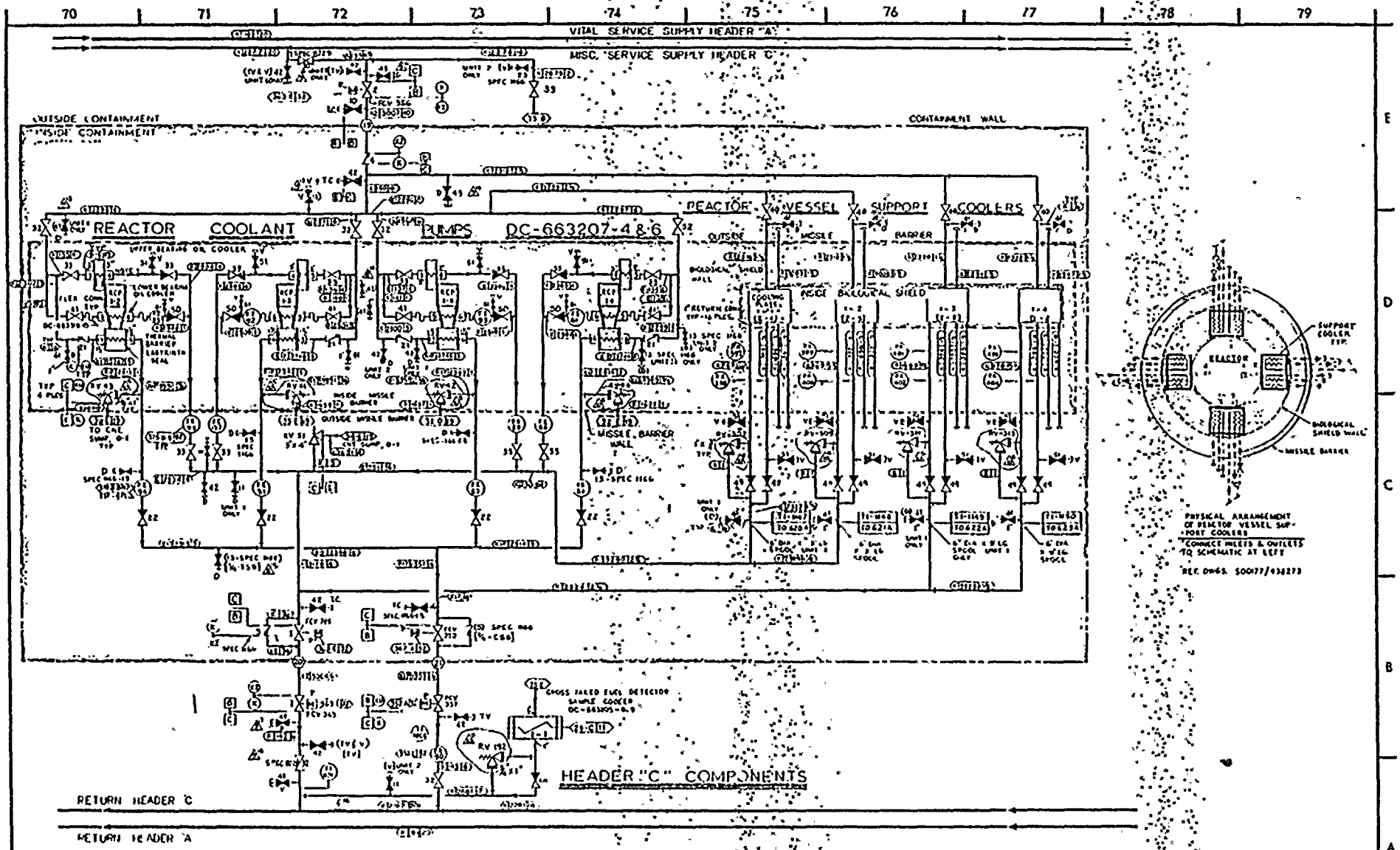

NOTE

P. G. & E. CO.	DRAWING NO.	CHANGE
SHEET 7 OF 25 SHEETS	102014	10

RM INDEXED REV. 10

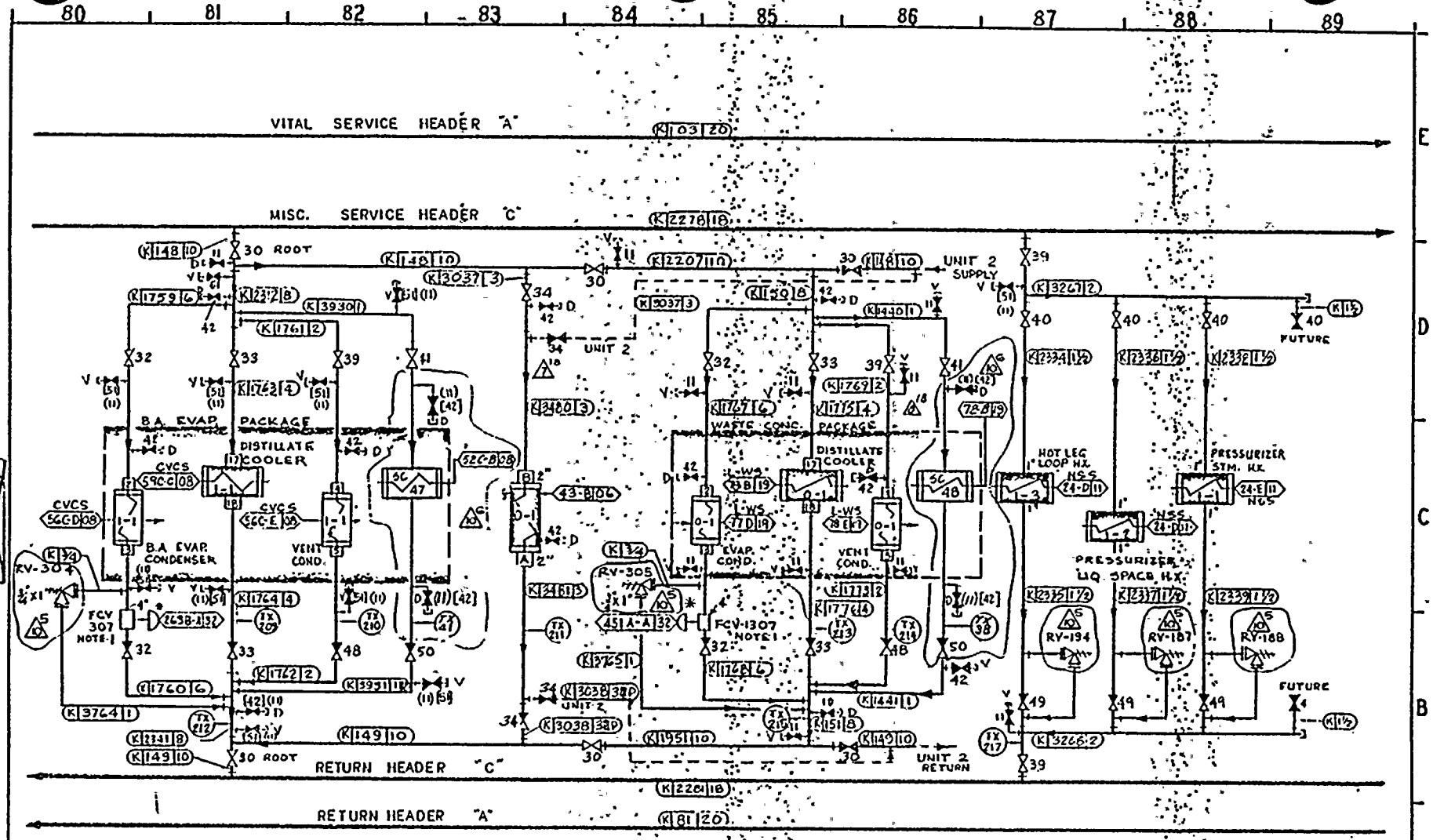

BORIC ACID EVAPORATOR PACKAGE COOLERS DC-663210-62 WESTINGHOUSE	AUX. STEAM DRAIN RECEIVER VENT COND. DC-663273-8	WASTE CONCENTRATOR PACKAGE COOLERS DC-663273-4 WESTINGHOUSE	NSSS SAMPLE HEAT EXCHANGER DC-663214-1

NOTE:
1. VALVE PLACED OUTSIDE EVAPORATOR AREA DUE TO HIGH RADIATION LEVEL. (80-B)

HEADER "C" COMPONENTS

P.G.&E.CO.

SHEET NO. 8 OF SHEETS

DRAWING NUMBER 102014

CHANGE 10

RM PACKED REV. 10

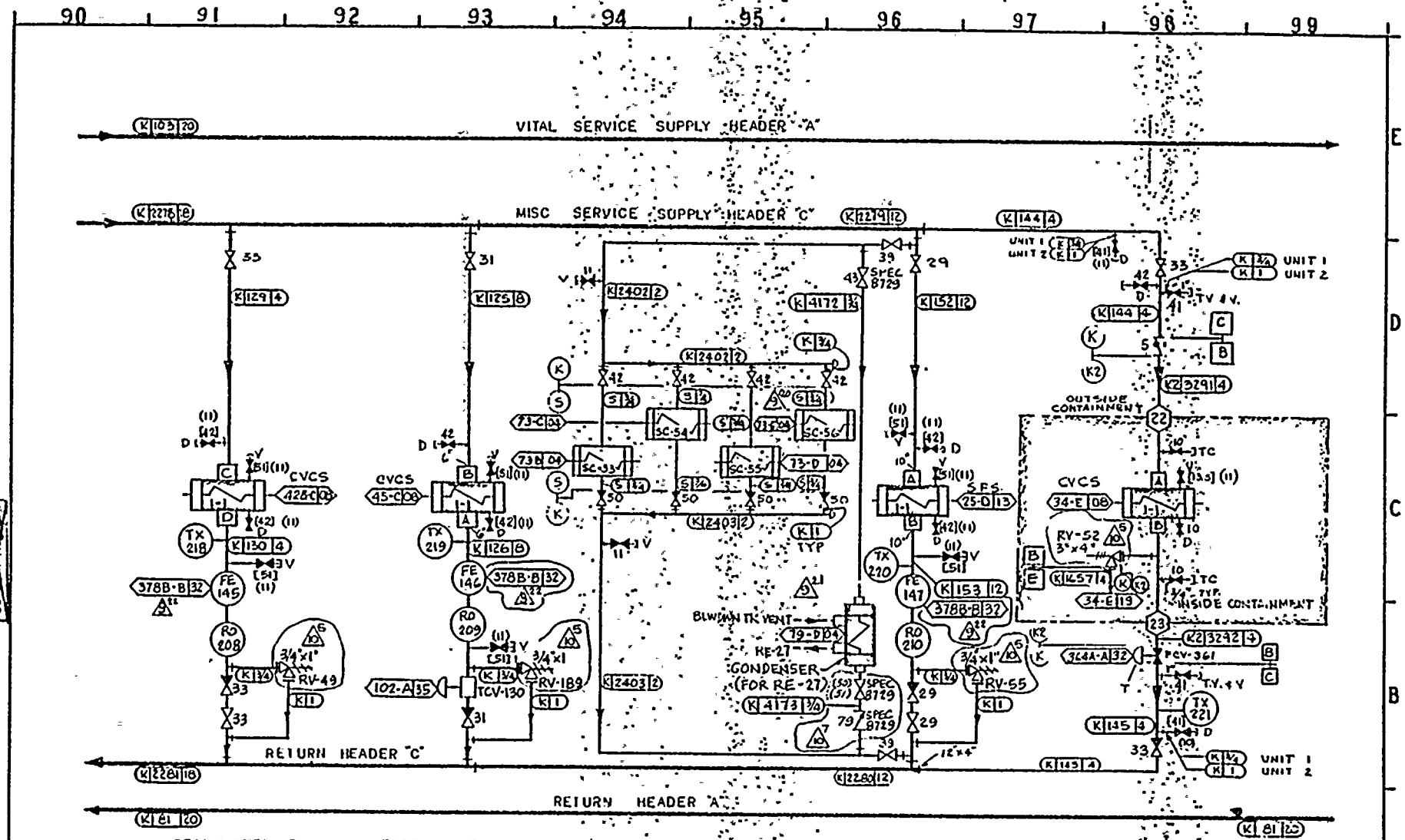

HEADER "C" COMPONENTS

P.G.&E.CO.

SHEET NO. 9 OF SHEETS

DRAWING NUMBER 102014

CHANGE 10

RM INDEXED REV 10

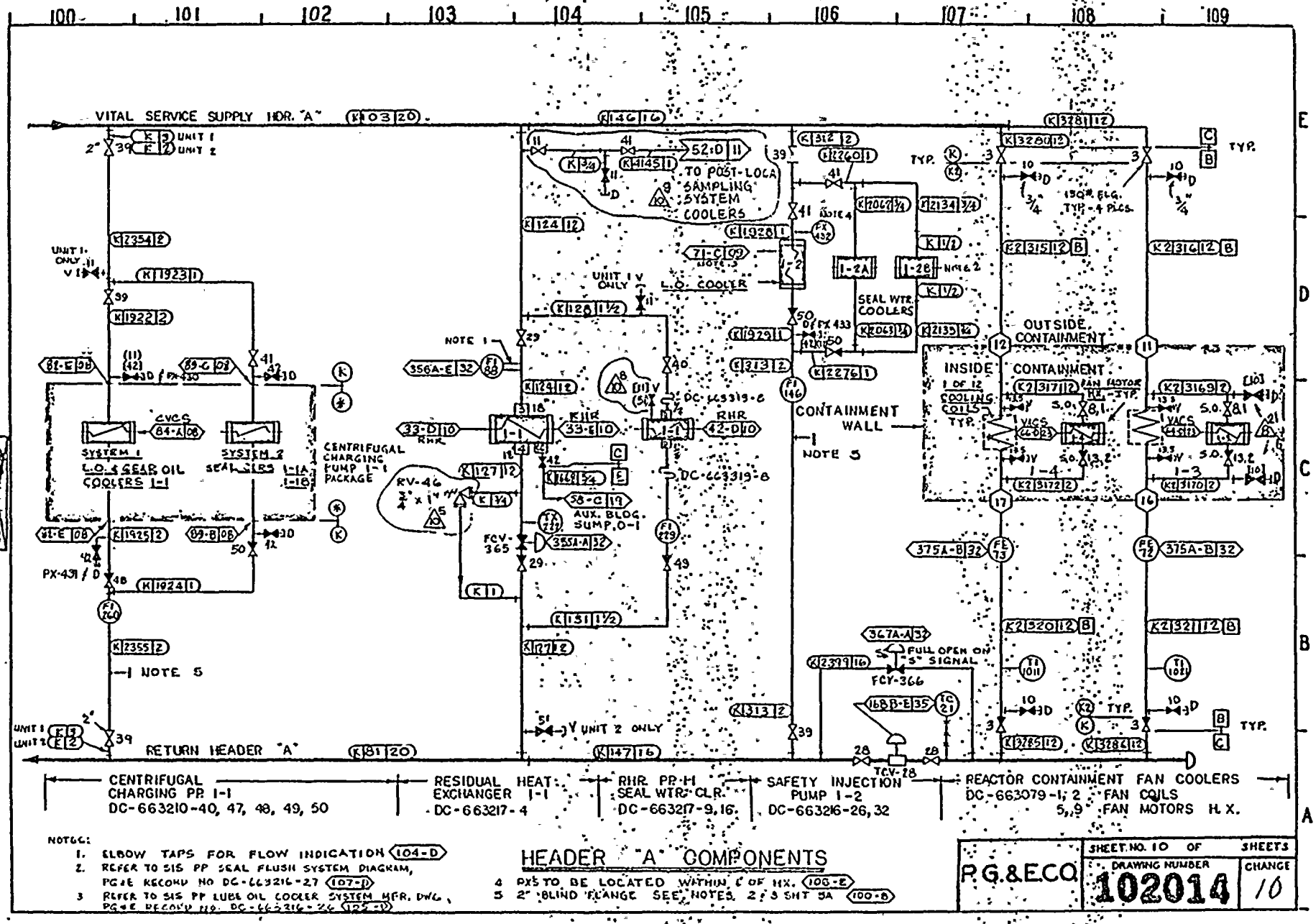

MAN INDEXED REV 10

SYSTEM OR EQUIP.	DESCRIPTION	CO-OR
	DELETED-VENT (WITH ITEM 51 VALVE) CONNECTION ON LINE 311	65-B
WASTE GAS COMPRESSOR CLRS	ADDED-DRAIN CONNECTIONS (WITH 2 ITEM 42 VALVES) ON LINES 2286 & 2290	62A-D 63A-B
RECIPROCATING CHARGING PP. COOLERS	ADDED-DRAIN CONNECTIONS (WITH 3 ITEM 42 VALVES) ON LINES 2292,2394 & 2397, AND VENT CONNECTIONS (WITH 3 ITEM 51 VALVES) ON LINES 2294 & 2295 & 2393	67A-D,C 69A-D,B
REACTOR COOLANT PP.1-2	ADDED-VENT CONNECTION (WITH ITEM 51 VALVE) ON LOWER BEARING OIL COOLER DISCH LINE 2308	71-D
	REVISED-DRAIN CONNECTION ON LINE 2313 MOVED UPSTREAM OF FE-94 AND VALVE ASSIGNED ITEM NO.13	71-C
RCP 1-3	REVISED-VENT CONNECTION MOVED FROM INLET LINE 136 TO OUTLET LINE 2308	71-D
	ADDED-VENT CONNECTION (WITH ITEM 51 VALVE) ON LINE 2309	71-D
	ADDED-DESIGNATION NO (ITEM 13) ON DRAIN VALVE ON LINE 2342	71-C
HEADER "C"	REVISED-ITEM 3 WAS ITEM 4.3 ON CHECK VALVE ON BYPASS LINE AROUND FCV-479	71-B
	ADDED-ITEM 13 TO T.C. VALVE WITH "HOLD" ON LINE 1357 "HOLD" WAS DELETED	73-B
	ADDED-ITEM 5 TO CHECK VALVE 14 BYPASS LINE AROUND FCV-750, "HOLD" WAS DELETED	73-B
RCP 1-1	REVISED-TEST VENT & TI-1004 TAPS MOVED UPSTREAM OF FE-90	74-D
	ADDED VENT & DRAIN CONNECTIONS (WITH ITEMS 51 & 13,RESP.) ON LINES 2307,3744 & 2314	74-D,C
	DELETED-DRAIN CONNECTION (WITH ITEM 41 VALVE) ON LINE 2297	75-D
RCP 1-4	REVISED-ITEM 42 DRAIN VALVE ON LINE 3745 MOVED TO LINE 2300, DELETED "UNIT 2 ONLY" ON SAID VALVE	72-D
	REVISED-ITEM 51 VENT VALVE ON LINE 137 MOVED TO LINE 2306, XOG INLET & OUTLET RESP.	73-D
RCP 1-2,3 CON HEADER	ADDED-ITEM 42 DRAIN VALVE TO LINE 2296	72-D
RCP 1-4	ADDED-ITEM 13 TO DRAIN VALVE ON LINE NO.2343 L.O.COOLER OUTLET	73-C
	ADDED-ITEM 51 VENT VALVE TO LINE 2310 LABYRINTH COOLER OUTLET	73-D
BORIC ACID EVAP. PACKAGE CLRS.	ADDED-VENT & DRAIN CONNECTIONS (8 ITEM 51 & 4 ITEM 42 VALVES, RESP.) ON INLET AND OUTLET LINES	80,81,82 C,D
	ADDED-PERSONNEL INSULATION ON LINE 3931	82-B
AUX.STEAM DR. RECEIVER VENT	ADDED-DRAIN CONNECTIONS (WITH 2 ITEM 42 VALVES) ON INLET LINE 3483 & ON EQUIP.SHELL SIDE	83-C,D
CONDENSER	ADDED VENT CONNECTION (WITH ITEM 51 VALVE) ON LINE 2207	84-D
WASTE CONC. PACKAGE COOLERS	ADDED-VENT & DRAIN CONNECTIONS (8 ITEM 51 & 4 ITEM 42 VALVES,RESP.) ON INLET & OUTLET LINES	84,85,86 D,C,B
N.S.S.S. SAMPLE HX	ADDED-VENT CONNECTION (WITH ITEM 51 VALVE) ON INLET LINE 2334	87-D
SEAL WTR.HX	ADDED-VENT & DRAIN CONNECTIONS WITH ITEM 51 ON LINE 130 & ITEM 42 ON LINE 129, RESP.	91-C
LETDOWN HX	ADDED-VENT & DRAIN CONNECTIONS WITH ITEM 51 ON LINE 126 & ITEM 42 ON LINE 125, RESP.	93-C
SPENT FUEL PIT HX	ADDED-VENT & DRAIN CONNECTIONS ON LINES 152 & 153 (2 ITEM 51 & 1 ITEM 42 VALVES)	96-C
EXCESS LETDOWN HX	REVISED-PIPING MATERIAL SPEC.BOUNDARY MOVED UPSTREAM OF FCV-361 VALVE	98-B
CENTRIFUGAL CHARGING PP.#1	ADDED-DRAIN CONNECTIONS (WITH 4 ITEM 42 VALVES) ON LINES 1922,1923,1924 & 1925	104,102-C
	DELETED-VENT CONNECTION (WITH ITEM 51 VALVE) ON OUTLET LINE 2355	100-B
RHR PP.#1 SEAL WTR.COOLER	ADDED-METALLIC EXPANSION JOINTS ON LINES 128 & 131	105-C
SAFETY INJECTION PP.#2	ADDED-DRAIN CONNECTION WITH ITEM 42 VALVE ON LINE 1928	106-D
	CHANGE-5 BY TO ORTUA LYNAWALAC & J B. OCEAN SEPTEMBER 12, 1974	
MAKEUP WTR. SUPPLY	DELETED-NOTE-2 (NO LINE NOS. ON UNIT-2. LINE NOS. ON UNIT-1 REQUIRED FOR HANGER ATTACHMENTS). LINES 3908 & 3502 WITH THIS NOTE USED ON BOTH UNITS. (TO AGREE WITH AREA DWG. 501548-08)	50 & 55-A △
COMP CLG. WTR PUMPS	REVISED-LOCATIONS OF FS-66, 67 & 68 WERE UPSTREAM OF TAKE OFF OF RECIRC. LINES 116, 117 & 157 RESPECTIVELY: (PER ECO N-179 DATED 2-20-74)	51,53,54-E △

SYSTEM OR EQUIP.	DESCRIPTION	CO-OR	REV
COMP CLG. WTR SURGE TANK	DELETED-LINE 2264 BETWEEN TANK'S NOZ. N3 AND RV-45 (TO AGREE WITH AREA DWG)	57-B	△5
RHR PP1-2 SEAL WTR CLR	ADDED-DRAIN WITH ITEM 42 VALVE TO LINE 122 (PER ECO N-446 DATED 5/15/74)	61-B	△6
CENT CHARGE PP 1-2 PKG COOLERS	REVISED-L.O., GEAR OIL & SEAL PLATE CLRS 1-2 (SYSTEM-1),WAS L.O. & GEAR OIL CLRS.1-2 (TO AGREE WITH MFR'S DWG.)	63-C	△5
	ADDED-CROSS REFERENCE COORDINATES AT PG&E-WEB BOUNDARIES TO THE COMM WITH REVISED P&ID 102006 SHT-8	63 & 64-C	△6
SAFETY INJ.PP SEAL WTR CLR	ADDED-K-1/2 INLET AND OUTLET LINES TO CLR 1-18 (PER ECO N-463, 8-14-74)	64-C	△7
WASTE GAS COMP.SEAL WTR CLRS	REVISED-RV-302 & 303 DISCH LINES 327 & 328 ARE NOW REROUTED INTO LINE 2290; WERE SHOWN TO DISCHARGE TO AUX BLDG SUMP. CONSEQUENTLY LINES 327 & 328 WERE UPGRADED FROM CLASS E TO C. (PER ECO N-269, DATED 3-14-74)	62A & 63A-CD	△8
RECIP CHARGE PP1-3 CLRS	DELETED-VENT WITH ITEM 51 VALVE AT LUBE OIL CLR INLET LINE 2294 AND OUTLET LINE 2295. (PER ECO N-81 DATED 1-7-74)	69A-BD	△9
	ADDED-VENT WITH ITEM-51 VALVES TO CLRS INLET LINE 2292 FOR UNIT-2 ONLY: DRAIN WITH ITEM-42 VALVE MADE FOR UNIT-1 ONLY (PER ECO N-422 (CONF. #18) DATE 5-2-74)	68A-D	△10
REACTOR CLT PP1-1	REVISED-DRAIN WITH ITEM-13 VALVE ON LINE 3744 MADE FOR UNIT-1 ONLY. DRAIN FOR UNIT-2 SHOWN ON LINE 2299 (PER ECO N-303 DATED 3-27-74)	74 & 75-D	△11
REACTOR VES SUPPORT CLRS	REVISED-RV-307, 309, 311 & 313 TO DISCH DOWNSTREAM OF ITEM-49 VLV ON SAME LINE. (PER ECO N-581, 6-24-74)	75 TO 77-C	△12
B.A. EVAP CLRS	REVISED-VENT WITH ITEM-51 VALVE AT VENT CONDENSER OUTLET LINE 1762 WAS BETWEEN TX-210 & ITEM-48 VALVE. (PER ECO N-422, CONF. #21, DATED 5-2-74)	82-B	△13
B.A. EVAP CONDENSER	REVISED-NOTE-1 TO FCV-307 WAS NOTE-2 (AT OUTLET LINE 1760) (DRAFTING ERROR)	80 B	△14
B.A. SAMPLE CLR	ADDED-VENT WITH ITEM 51 VALVE AND DRAIN WITH ITEM-42 VALVE TO INLET LINE 3930 & OUTLET LINE 3931 (PER ECO N-446 DATED 5-15-74)	82-B,C,D	△15
CENT CHARGE PP 1-1	ADDED-CROSS REFERENCE COORDINATES AT P.G.&E.-WPC BOUNDARIES TO TIEDOWN WITH REVISED P & ID 102008 SH. 8	100/101-C	△16
	REVISED-DRAINS WITH ITEM-42 VALVE, WERE SHOWN ON MFR'S PIPING.	100/101-C	△17
SAFETY INJ PP SEAL WTR CLR	ADDED K-1/2 INLET AND OUTLET LINES TO CLR 1-28	107-D	△18
CENTRAL SAMPLE PANEL CLRS	REVISED-OUTLET RV-494 WAS TO DISCH. BACK TO LINE 3266 (PER ECO N 675 9-24-74)	66A-B	△19
	CHANGE 6 BY MORINOUCHI, MANALAC, PAHN 5/22/75 LAST ECO CHANGE 12/20/74		
GENERAL NOTES	REVISED-NOTE 2 EXCLUDING ITEM 11 VALVE FROM THE SCOPE OF SPEC 8729 (CONSEQUENCE OF ECO N-675, 9 24 74)	SHT. 1	△1
CCW HEAT EXCHANGERS INLET	DELETED-NOTE 1 AND REFERENCES TO IT AT PI - 110, 111, 112, & 113. FIELD INSTALLED TO FIGURE 453,DWG 049094 (PER ECO N-707, 10 17-74)	50 TO 52-A 56 & 56-D & E	△2
CCW PP. & L.O. COOLER RETURN HDR.	DELETED-A REDUNDANT ITEM 39 VALVE ON LINES DESIGNATED 2132 & 2133 (REF. P & ID VARIANCE TRANSMITTAL 17 & AREA DWG 500083 & 500833)	50, 53-C	△3
LUBE OIL COOLERS	ADDED-NOTES 1, 2, & 3 CLARIFYING THE ADDITION OF PRESSURE TEST POINTS AND BLIND FLANGED CONNECTIONS ON L.O. COOLERS (PER ECO N- 640, 8 7-74)	50A TO 53A-A	△4
HEADER "B" COMPONENTS	ADDED-NOTE 4 CLARIFYING THE ADDITION OF PRESSURE TEST POINTS (PER ECO N- 640, 8-7-74)	63 TO 66-A	△5
WASTE GAS COMP. SEAL WATER HX. 0-1	REVISED-RETURN LINE 2291 TO UNIT 2 HEADER "C", WAS SOURCE TAP DOWNSTREAM OF RV-303, NOW UPSTREAM (PER ECO N-675, 9-24-74)	62A-C	△6

SYSTEM OR EQUIPMENT	DESCRIPTION	CO-ORDINATES	REV
RCP LOWER BRG OIL COOLER	ADDED-FLEXIBLE CONNECTION ON FOLLOWING LINES (see below) (PER ECO N-641, 8-15-74)		△7
RCP 1-2 UPPER BRG. OIL COOLER	ADDED-NOTE 1 DESCRIBING ADDITION OF SHORT PIPE (K-3) AFTER OUTLET NOZZLE 4 (REF. AREA DWG. 500047 & MCMILLAN MEMO 213)	70-D,A	△8
RCP 1-4 LOWER BRG. OIL COOLER	REVISED-LOCATION OF DRAIN CONNECTION, WAS UPSTREAM OF ITEM 21 CHECK VALVE NOW DOWNSTREAM ON LINE 3745 (REF. AREA DWG. 500066 & MCMILLAN MEMO 173)	72, 73-D	△9
REACTOR VESSEL SUPPORT CLRS. OUTLET LINES	REVISED-RV'S WITH INLET TAPS LOCATED INSIDE MISSLE BARRIER WERE MOVED OUTSIDE TO PRECLUDE WALL PENETRATION BY DISCHARGE LINE (PER ECO N-581 REV. BY R.C. RAHN 6 24 74)	75 TO 77-C	△10
	DELETED-RV OUTLET LINE DESIGNATION NUMBERS 3711, 3712, 3713, & 3714. RELOCATION OF RV'S SHORTENED PIPE LENGTH, NOW DESIGNATED K-1 CODE CLASS "C" (CONSEQUENCE OF ECO N-581, 6 24 74)	75 TO 77-C	△11
REACTOR VESSEL SUPPORT CLRS. RETURN LINES	REVISED-6" X 9" SPOOL ON LINES 2317 & 2324 APPLIES TO UNIT-1 ONLY. UNIT 2 WILL USE ELBOW FOR THERMOWELL INSTALLATION (REF. AREA DWG. 500899)	75 TO 77-C	△12
	DELETED-DRAIN CONNECTION WITH ITEM 41 VALVES AT ELBOW THERMOWELL INSTALLATION ON LINES 2317 & 2324 (UNIT 2 ONLY) (REF. AREA DWG. 500899)	75, 76-C	△13
AUX. STM. DR RCVR. VENT COND. 0-1	REVISED-CCW ALTERNATE SUPPLY FROM UNIT 2 LINE 3037, & RETURN LINE 3038. REDRAWN FOR CLARIFICATION	84 TO 86-B & D	△14
WASTE CONCENTRATOR COOLER 0-1	REVISED-SCOPE OF LINE DESIGNATION NUMBERS 2027 & 1951 REDUCED. ITEM 30 VALVES ARE NOW CHANGED TO LINES 149 & 149 IN UNIT 1 TO OBTAIN SYMMETRY WITH UNIT 2. (REF. AREA DWG. 500097)	84, 85-B TO D	△15
	ADDED-VENT CONNECTION WITH ITEM 51 VALVE ON VENT CONDENSER INLET LINE 1769 (REF. AREA DWG. 500096)	86-D	△16
WASTE CONCENTRATOR SAMPLE COOLER SC-48	ADDED-VENT CONNECTIONS WITH ITEM 11 & 42 VALVES ON LINES 1440 & 1441 RESPECTIVELY (PER ECO N 675, 9 24-74)	86-B & D	△17
NSSS SAMPLE HEAT EXCHANGERS	ADDED-PROVISIONS FOR AN ADDITIONAL HEAT EXCHANGER, SPARE ITEM 40 VALVE ON SUPPLY HEADER (LINE 3267) AND ITEM 49 VALVE ON RETURN LINE 3268 (PER ECO N-675, 9-24-74)	89-B & D	△18
HEADER "A" COMPONENTS	ADDED-NOTES 4 & 5 CLARIFYING ADDITION OF OF PRESSURE TEST POINTS (PER ECO N-640, 8-7 74)	104 TO 107-A	△19
CLASS "I" VALVES	REVISED-AS FOLLOWS (UNIT 1 ONLY) (see below)		△

RCP LOWER BRG OIL COOLER — flexible connections:

RCP	LINE NUMBER INLET	LINE NUMBER OUTLET	CO-ORDINATES
#1	136	2307	74-D
#2	139	2308	70,71-D
#3	140	2309	71,72-D
#4	141	2310	72,73-D

CLASS "I" VALVES — REVISED-AS FOLLOWS (UNIT 1 ONLY):

LINE NO. OR EQPT.	FUNCTION	REVISED FROM	REVISED TO	CO-ORDINATES
CCW PP. 1-1	DRAIN	42	11	50-D, E
CCW PP. 1-2	DRAIN	42	11	52-D, E
CCW PP. 1-3	DRAIN	42	11	54-D, E
LI-136	INST.	42	11	56-B, C
LI-138	INST.	42	11	57-B
2132	DRAIN	42	11	53-C
96	VENT	51	11	56-D
2355	DRAIN	42	11	56-C
2277	DRAIN	41	22	59-D
2277	DRAIN	42	11	60A-D
2133	DRAIN	42	11	56A-B
3273	DRAIN	42	11	63-C
3276	DRAIN	42	11	63-C
3275	DRAIN	42	11	63-C
310	VENT	51	11	65-D
1927	DRAIN	42	11	65-C
2286	DRAIN	42	10	60A-D
2394	DRAIN	42	11	67A-C
2397	DRAIN	42	11	67A-C
2293	VENT	51	11	67A-B
1759	VENT	51	11	80-D
1760	VENT	51	11	80-C
1763	VENT	51	11	81-D
1764	VENT	51	11	81-C
2341	DRAIN	42	11	81-B
2341	VENT	51	11	81-B
1761	VENT	51	11	82-D

CLASS "I" VALVES (continued):

LINE NO. OR EQPT.	FUNCTION	REVISED FROM	REVISED TO	CO-ORDINATES
1762	VENT	51	11	82-C
3930	VENT	51	11	82-D
3930	DRAIN	42	11	82-D
3931	VENT	51	11	83-B
3931	DRAIN	42	11	83-C
3267	VENT	51	11	87-D
129	DRAIN	42	11	91-C
130	VENT	51	11	91-C
126	VENT	51	11	93-C
152	VENT	51	11	96-C
152	DRAIN	42	11	96-C
153	VENT	51	11	96-C
144	DRAIN	41	11	98-D
145	DRAIN	41	10	98-D
1922	DRAIN	42	11	104-D
1929	DRAIN	42	11	106-D
SEAL WTR. H.X.	VENT	51	11	91-C
SEAL WTR. H.X.	DRAIN	42	11	91-C
LETDOWN H.X.	VENT	51	11	93-C
LETDOWN H.X.	DRAIN	42	11	93-C
SPENT FUEL H.X.	VENT	51	11	96-C
SPENT FUEL H.X.	DRAIN	42	11	96-C
EXCESS LETDN. H.X.	VENT	13.5	11	98-C

(PER ECO N-675, 9-24-74) △20

VENTS & DRAINS — ADDED-AS FOLLOWS (UNIT 1 ONLY):

LINE NO. OR EQPT.	FUNCTION	VALVE ITEM NO.	CO-ORDINATES
CCW PP. 1-1	DRAIN	11	50-D
CCW PP. 1-2	DRAIN	11	52-D
CCW PP. 1-3	DRAIN	11	54-D
89	DRAIN	42	51-C
90	DRAIN	42	52-C
91	DRAIN	42	54-C
94	DRAIN	11	60-D
122	VENT	11	61-C
122	DRAIN	11	61-C
3275	VENT	11	63-B
2356	DRAIN	11	63-B
2357	VENT	11	63-B
3248	DRAIN	11	65A-D
2292	VENT	11	67A-D
2394	VENT	11	67A-D
2296	DRAIN	11	70-D
2311	DRAIN	11	71-C
2661	DRAIN	11	72-A
2402	VENT	11	94-D
2402	VENT	11	94-D
2403	DRAIN	11	94-C
23541	VENT	11	100-D
124	DRAIN	11	104-D
128	VENT	11	104-D

(PER ECO N-675, 9 24-74) △21

VENTS & DRAINS — ADDED-AS FOLLOWS:

LINE NUMBER	FUNCTION	VALVE ITEM NO.	CO-ORDINATES
2356	VENT	11	63-D
2397	VENT	11	67A-C
2313	DRAIN	11	71-C
2335	VENT	11	87-B

(PER ECO N-758, 12-20-74) △22

WASTE CONCENTRATOR PACKAGE COOLERS — REVISED-CLASS "I" VENT & DRAIN VALVES AS FOLLOWS:

LINE NUMBERS	FUNCTION	REVISED FROM	REVISED TO	CO-ORDINATES
2207	VENT	51	11	84-D
1787	VENT	51	11	84-D
1766	VENT	51	11	84-C
1775	VENT	51	11	85-D
1776	VENT	51	11	85-C
151	DRAIN	42	10	85-B
151	VENT	51	11	85-B
1765	VENT	51	11	86-C
1773	VENT	51	11	86-C

(PER ECO N-675, 9-20-74) △23

CONTINUED FROM SHT-4

P. G. & E. CO. SHEET 11 OF SHEETS	102014	CHANGE 10

RM INDEXED REV 10

40B | 41B | 42B | 43B | 44B | 45B | 46B | 47B | 48B | 49B

SYSTEM OR EQUIPMENT	DESCRIPTION	CO-ORDINATES	REV
PRESSURE TEST POINTS & TEES WITH BLIND FLANGE PROVISIONS FOR FLOW TESTS	ADDED-AS FOLLOWS		△7

LINE NUMBER	INSTRUMENT	CO-ORDINATES
1886	PX-405	53A-C
1887	PX-406	53A-C
1887	BLIND FLANGE W/VALVE	53A-B
1777	PX-407	55A-C
1792	PX-408	55A-C
1792	BLIND FLANGE	55A-B
1765	PX-409	57A-C
1766	PX-410	57A-C
1766	BLIND FLANGE	57A-B
3273	PX-426 ON EXISTING DRAIN	62-C
3276	PX-427 ON EXISTING DRAIN	62-C
2357	BLIND FLANGE	63-B
310	PX-428 ON EXISTING VENT	64-D
1827	PX-429 ON EXISTING DRAIN	64-C
311	BLIND FLANGE	65-B
1922	PX-430 ON EXISTING DRAIN	101-D
1925	PX-431 ON EXISTING DRAIN	100 B
2365	BLIND FLANGE	101-B
1928	PX-432	106 D
1929	PX-433 ON EXISTING DRAIN	106 D
313	BLIND FLANGE	106-C

(PER ECO M-640, 8 7-74)

CHANGE 7 BY G.HORINOUCHI, L.MANALAC, E.VALERIANO, R.RAHN 6/9/76
LAST ECO CHANGE ENTERED 5/7/76

SYSTEM OR EQUIPMENT	DESCRIPTION	CO-ORDINATES	REV
CCW PUMPS START-UP STRAINERS	ADDED-2" DRAIN CONNECTION FOR FLUSHING OPERATION. VALVE ITEM NUMBERS AS FOLLOWS. ITEM NO. 26, SPEC. 1166, APPLICABLE PP. 1-1, 2, 3, 2-2, 3; ITEM NO. 13.2, SPEC. 8729, APPLICABLE PP. 2-1 (PER ECO M-851 OF 5/5/75)	50/52/54-D; 50-D	△7
SURGE TANK COMPARTMENT, INSTRUMENTATION, AND CONTROL VALVES	REVISED-COMPARTMENT AND INSTRUMENT TAG NUMBER ASSIGNMENTS TO REFLECT AS BUILT CONDITIONS. (see table below) (PER ECO M-944 REV. 1 OF 1/27/76)		△7

DESIGNATION	UNIT 1 A	UNIT 1 B	UNIT 2 A	UNIT 2 B	
COMPARTMENT	A	B	A	B	57-B
ORIENTATION	NORTH	SOUTH	NORTH	SOUTH	57-B
LT-136	X			X	55/57-B
LT-138		X	X		56/59-B
LC-59	X			X	55/57-B
LC-60		X	X		56/58 B
LCV-69		X	X		55/56-B
LCV-70	X			X	55/56 B

SYSTEM OR EQUIPMENT	DESCRIPTION	CO-ORDINATES	REV
CCW HEAT EXCHANGERS	REVISED-UNIT 2 VENT VALVES ON HEAT EXCHANGER INLET AND OUTLET, LINE NO. 95, 96, 101, AND 102, WERE ITEM 39 SPEC. 8729, ARE NOW ITEM 58 SPEC. 8729. (PER ECO M-920 ITEM 30 OF 5/7/76)	56-D/E; 58-D/E	△7
	REVISED-VENT CONNECTION LOCATION ON HEAT EXCHANGER 1-1, 2-1 INLET, WAS DOWNSTREAM OF TE-4, IS NOW UPSTREAM. (REF. AREA DWG. 500028 & 500878)	56-E	△7
CCW PUMPS COOLING WATER RETURN	DELETED-DRAIN CONNECTION WITH AN ITEM 42 VALVE ON LINE NO. 2132. (CORRECT DRAFTING ERROR ON CHANGE 6)	51A-B	△7
WASTE GAS COMPRESSOR 0-1 SEAL WATER COOLER	REVISED-LOCATION OF DRAIN CONNECTION WITH AN ITEM 42 SPEC 8729 VALVE ON LINE NO. 2290, WAS DOWNSTREAM OF COMPRESSOR 0-1 RETURN, IS NOW UPSTREAM (REF. AREA DWG. 500071 & 500920)	62A-B	△7
RECIPROCATING CHARGING PP. COOLER SUPPLY	REVISED-BY INTERCHANGING RELATIVE LOCATIONS OF VENT AND DRAIN CONNECTIONS ON LINE NO. 2292, UNIT 1 ONLY. VENT WAS UPSTREAM OF DRAIN, IS NOW DOWNSTREAM. (REF. AREA DWG 500074 & 500056)	67A-D	△7
	ADDED-DRAIN CONNECTION WITH AN ITEM 42 SPEC 8729 VALVE ON LINE NO. 2292, UNIT 2 ONLY. (REF. AREA DWG. 500924 & 501547)	67A-D	△7
RCP #2 BEARING OIL COOLER RETURN	ADDED-VENT CONNECTION WITH AN ITEM 11 SPEC 1166 VALVE ON RETURN LINE NO. 2304. (REF. AREA DWG. 500179 & 501523)	71-C	△7
RCP AND REACTOR VESSEL SUPPORT CCW SUPPLY	REVISED-TV AND V CONNECTION ON LINE NO. 133. UNIT 1 ONLY. WAS DOWNSTREAM OF LINE NO. 2679 JUNCTION, IS NOW UPSTREAM (REF. AREA DWG. 500052)	72-E	△7
RCP AND REACTOR VESSEL SUPPORT CCW SUPPLY	REVISED-TV CONNECTION ON LINE NO. 133. UNIT 2 ONLY. WAS DOUBLE FUNCTION TV & V, IS NOW ONLY SINGLE FUNCTION (REF. AREA DWG 501557)	72-E	△7
RCP AND REACTOR VESSEL SUPPORT CCW RETURN	REVISED-TV CONNECTION ON LINE NO. 142. UNIT 2 ONLY. WAS DOUBLE FUNCTION TV & V, IS NOW ONLY SINGLE FUNCTION. (REF. AREA DWG. 501557)	72-B	△7
GROSS FAILED FUEL DETECTOR CCW RETURN	ADDED-VENT CONNECTION WITH AN ITEM 11, SPEC 1166 VALVE ON LINE NO. 2681. UNIT 2 ONLY. (REF. AREA DWG. 501567)	72-A	△7
GROSS FAILED FUEL DETECTOR CCW SUPPLY	ADDED-VENT CONNECTION WITH AN ITEM 25 SPEC 1166 VALVE ON LINE NO. 2679. UNIT 2 ONLY. (REF. AREA DWG. 501567)	73-E	△7
RCP CCW RETURN LINE NO. 1357	REVISED-EQUALIZING CHECK VALVE AROUND FCV-750 UNIT 2 ONLY. WAS ITEM 5, SPEC 1166, IS NOW 3/4-CSB. (PER ECO M 957 OF 10/30/75)	73-B	△7
REACTOR VESSEL SUPPORT COOLERS RETURN	REVISED-LOCATION OF VENT CONNECTION ON RETURN LINE NUMBERS 1695, 1697, 1658, AND 1701. VENTS WERE DOWNSTREAM OF RELIEF VALVE CONNECTION, ARE NOW UPSTREAM (REF. AREA DWG. 500181 & 502215)	75/76/77-C	△7
BA EVAPORATOR AND WASTE CONCENTRATOR CCW SUPPLY	ADDED-DRAIN CONNECTION WITH AN ITEM 11, SPEC. 1166 VALVE ON LINE NO. 148. (REF. AREA DWG. 500096 & 500948)	81-D	△7
AUX. STEAM DRAIN RECEIVER VENT CONDENSER UNIT 2 SUPPLY	DELETED-DRAIN CONNECTION WITH AN ITEM 42 SPEC 8729 VALVE ON LINE NO. 8037. DRAIN ON UNIT 1 SERVES BOTH UNITS. (REF. AREA DWG. 500107)	83-D	△7
NSSS SAMPLE HEAT EXCH. RETURN	REVISED-LOCATION OF VENT CONNECTION WITH AN ITEM 11, SPEC. 1166 VALVE WAS ON LINE NO. 2335, IS NOW ON LINE NO. 3268. (REF. AREA DWG. 500108 & 500949)	87-B	△7
LETDOWN HEAT EXCH. CCW RETURN	ADDED-FLANGES ONTO THE INLET AND OUTLET OF RV-189 TO FACILITATE REMOVAL FOR CALIBRATION (PER ECO M-919 ITEM 25 OF 4/21/76 ECO M-920 ITEM 29 OF 4/21/76)	93-B	△7
RESIDUAL HEAT EXCH. CCW SUPPLY	REVISED-RELATIVE LOCATION OF FI-68 ON LINE NO. 124. FI-68 WAS UPSTREAM OF ITEM 29 VALVE, IS NOW DOWNSTREAM. (REF. AREA DWG. 500074 & 500824)	104-D	△7
REACTOR CONTAINMENT FAN COOLERS (UNIT-2 ONLY)	ADDED -DRAINS WITH ITEM 10 VALVES AT INLET LINES 3163 & 3165/OUTLET LINES 3164 & 3166 OF CLRS 2-1/2-2 (PER AREA DWG. 500899)	64&69-C	△8
WASTE GAS COMP SEAL WTR CLRS. 1-1 & 0-1	REVISED-BOUNDARY LOCATION BETWEEN LINE 216 & 2291 TO UPSTREAM OF LINE 2291 (TAP) FOR UNIT-2. COOLERS & RELIEF VALVES DISCH (TAPS) TO NOW 2290 NOW IN THE ORDER OF 2291, 2289, 326 & 327. (PER AS BUILT DWGS: 1-14-10 & 1-14 203)	62A-C&D	△8
CENTRAL SAMPLE PANEL 1-1 (CLR-9)	REVISED-RV-191 DISCH REROUTED TO COOLER DISCH DOWNSTREAM OF ITEM 39 VALVE ON LINE 3266 (PORTION INCREASED TO K-3") (PER ECO M-919 ITEM 78 AND AREA DWG. 501547)	65A-B	△8
RCP (1-2) CLG WTR SUP HDR 2290 (UNIT-1 ONLY)	REVISED-DRAIN VALVE NOW ITEM 42 WAS ITEM 11. VENT WITH ITEM 11 VALVE WAS DRAIN WITH ITEM 42 VALVE. (PER AREA DWG. 500129)	70 & 72-D	△8
RCP (1-3/1-4) MOTOR BRG CO COOLER	ADDED -DRAIN WITH ITEM 42 VALVE TO CLG WTR SUP LINES 140 & 141. (PER AREA DWG. 500065/500066)	72-D	△8
RCP 1-2 TERM BARRIER CLG WTR RETURN	REVISED-DRAIN VALVE ON LINE 2313 NOW ITEM 15 FOR UNIT-1, AND 3/4-TSB FOR UNIT-2 WERE ITEM 11. (PER ECO M 759 REV-1 OF 7-8-76)	71-C	△8
SAMPLE COOLER 1-1 (FAN, FUEL DETECTOR)	DELETED-DRAIN WITH ITEM 11 VALVE AT OUTLET LINE 2681. (PER ECO M 919 ITEM 79)	72-A	△8
BORIC ACID EVAPORATOR	DELETED-BA SAMPLE COOLER SC-47 (PER ECO M-1016 OF 5-12-76)	82-D	△8
WASTE CONCENTRATION	DELETED-CONCENTRATE SAMPLE COOLER SC-48 (PER ECO M-1016 OF 5-12-76)	86-D	△8
STEAM GEN BLOWDOWN SAMPLE COOLERS	DELETED-(1) VENT WITH ITEM 11 VALVE ON CLG WTR SUP HDR 2402 INCLUDING NOTE "UNIT-1 ONLY" (PER ECO M-919 ITEM 77)	94-D	△8
	REVISED-VENT WITH ITEM 11-VALVE ON CLG WTR DISCH HDR 2403 WAS DRAIN WITH ITEM 11 VALVE. DELETED NOTE "UNIT-1 ONLY" (PER ECO M-919 ITEM 77)	74-C	△8
CONTAINMENT FAN COOLER (2-3)	ADDED -DRAINS WITH ITEM 10 VALVES TO CLR INLET LINE 3169/OUTLET LINE 3170 (PER AREA DWG. 500899)	109-C	△8
SEAL WTR, LETDOWN & SPENT FUEL PIT HX EXCHANGERS	ADDED -FLOW ELEMENTS (FE-145,146,147) AND RESTRICTING ORIFICES (RO-208,209,210) AT HX EXCHANGERS SHELL SIDE OUTLET. (PER ECO M 1108 OF 3-8 78)	91,93,96-B,C	△8

CHANGE -8, 8-29-78
BY T. ORTUA, L. MANALAC & R. RAHN
(LAST ENGINEERING CHANGE ENTERED 4-10-78)

SYSTEM OR EQUIPMENT	DESCRIPTION	CO-ORDINATES	REV
COVER SHEET	DELETED BORIC ACID EVAPORATOR AND WASTE CONCENTRATOR SAMPLE COOLERS. (PER ECO M-1016 OF 5-12-76)	SHT-1	△8
CCW PUMPS DISCH. HEADERS (UNIT-2 ONLY)	ADDED -LINE DRAINS WITH ITEM 41 VALVES TO LINES 95 & 96. (PER ECO M-1073 OF 2-2-77)	53-D&E	△8
CCW HEAT EXCH 2-1 (UNIT-2 ONLY)	REVISED-(2) VENT VALVES ON INLET LINE 95 NOW ITEM 11 WERE ITEM 58. (PER AS BUILT ISO 2-14-27 REV-4)	56-E	△8
CCW HEAT EXCH 2-2 (UNIT-2 ONLY)	REVISED-(2) VENT VALVES ON INLET LINE 96 NOW ITEM 11 WERE ITEM 58. (PER AS BUILT ISO 2-14-26 REV-5)	56-D	△8
	REVISED (2) VENT VALVES ON DISCH LINE 102 NOW ITEM 11 WERE ITEM 58. (PER AS BUILT ISO 2-14-29 REV-8)	57-D	△8
	REVISED-DRAIN VALVE ON DISCH LINE 102 NOW ITEM 11 WAS ITEM 42 (PER AS BUILT ISO 2-14-29 REV-8)	58-D	△8
CCW SURGE TANK	REVISED-COMPARTMENT DESIGNATION A&B MADE SAME FOR BOTH UNITS. LC-59 & 60 INTERCHANGED, AND LCV-69 & 70 (DEMINERALIZED MAKE-UP WTR) MADE SAME FOR BOTH UNITS. (PER ECO M-1119 OF 2-8-78)	55---57-B	△8
	ADDED -INSTR PIPING DRAIN WITH ITEM-11 VALVE (LEVEL INSTR AT COMPARTMENT "B") (PER ECO M-750 OF 12-20-74)	57-B	△8
VITAL SERVICE SUPPLY FOR "B" (UNIT-2 ONLY)	REVISED-DRAIN VALVE ON LINE 104 NOW ITEM 11 WAS ITEM 42 (PER AS BUILT ISO 2-14-29 REV 8)	50A-D	△8

CHANGE-9, 1-30-79
BY T. ORTUA, L. MANALAC & J. RAGGIO

SYSTEM OR EQUIPMENT	DESCRIPTION	CO-ORDINATES	REV
COVER SHEET	ADDED -CONDENSER, STEAM GEN BLOWDOWN HE 27 (PER DCO EM-059R1 OF 8-31-78)	SHT-1	△9
COMPONENT COOLING WATER	REVISED-FS-66,67 & 68 TO FE-66,67 & 68 AT PUMPS 1-1,1-2 & 1-3 DISCHARGE (PER DCO-EM-104)	51,53&54-C	△9
	REVISED-RETURN LINES-2132 & 2133 CROSS REFERENCE COORDINATES WERE 57A-B & 50A-B (AS REQ'D BY DCO-EM-182 OF 12-11-78)	51&52-C	△9
	REVISED-(CCW PUMPS STUFFING BOX & LO COOLER) LINE-2131 WAS 2129 AND WAS DRAINING COOLING WATER FROM HDR-A. (PER DCO-EM-182 OF 12-11-78)	50A-D	△9
	REVISED-LINE-2133 WAS 2132 AND WAS DISCHARGING COOLING WATER TO HDR A. (PER DCO-EM 182 OF 12-11-78)	50A-B	△9
	REVISED-OPENED ISO VALVE BETWEEN PUMPS 1-2 AND 1-3: CLOSED VALVE BETWEEN PUMPS 1-1 AND 1-2 AT BOTH INLET AND OUTLET ALLOWING PUMPS 1-2 AND 1-3 TO HAVE COMMON SUPPLY AND DISCH HEADERS. (PER DCO EM-182 OF 12-11-78)	53A-D/B	△9
	REVISED-HEADER LINE-2129 WAS 2131 AND WAS DRAINING COOLING WATER FROM HEADER-B	58A-D/E	△9
	HEADER LINE-2132 WAS 2133 AND WAS DISCHARGING TO HEADER B (PER DCO-EM-182 OF 12-11-78)	58A-B	△9
CENTRIFUGAL CHARGING PP 1-2 PACKAGE COOLERS	DELETED-DRAIN WITH IT-11 VALVE OFF LINE-2354, UNIT-1 ONLY. (PER AS BUILT G-166, ISO-14-223 R0)	63-D	△9
	REVISED-DRAIN WITH IT-42 VALVE DOWNSTREAM OF IT-39 VALVE ON LINE 3273 WAS FOR UNIT-2 ONLY. (PER AS BUILT G-154, ISO-14-205 R7)	63-C	△9
	REVISED-2" TEST POINT WAS UPSTREAM OF FI-261 ON DISCHEADER 2357. NOTE-4 WAS "2" BLIND FLANGE, REFER TO NOTES 2 & 3, SHT-5A,63-B" (PER AS BUILT 5678 OF 9-11-78, ISO-14-204)	63-B	△9
	DELETED-VENT WITH IT-11 VALVE ON DISCH LINE-3275 (UNIT-1) DOWNSTREAM OF IT-50 VALVE (PER AS BUILT 5678 OF 9-11-78, ISO-14-204)	63-B	△9
	REVISED-DRAIN WITH IT-42 VALVE UPSTREAM OF IT-50 VALVE ON LINE-3275 WAS FOR UNIT-2 ONLY. (PER AS BUILT 5678 OF 9-11-78, ISO-14 204)	63-C	△9
CHARGING PP 1-3 OIL COOLERS	REVISED-COOLING WATER WAS ON SHELL SIDE FOR LO & FLUID OR OIL COOLERS. (PER DC-663210-25)	64A-C	△9
REACTOR COOLANT PUMPS	ADDED -ITEM-30 (SPEC 8729) BUTTERFLY VALVE TO CLG. WATER SUPPLY HEADER-133. (PER DCO EM-150 OF 10-26-78 & J.RAGGIO MEMO OF 1-18-79)	72-E	△9
	ADDED -DRAIN WITH IT-43 VALVE UPSTREAM OF COOLING WATER SUPPLY FCV-356. (PER DCO EM-150 OF 10-26-78)	72-E	△9
	ADDED -VENT AND DRAIN WITH IT-43 VALVE DOWNSTREAM OF FCV-363, COOLING WATER DISCH LINE-142. (PER DCO-EM-150 OF 10-26-78)	72-B	△9
	ADDED -ITEM. 32(SPEC 8729) BUTTERFLY VALVE TO CLG. WATER DISCHARGE LINE-142. (PER DCO EM-150 OF 10-26-78 & J. RAGGIO'S MEMO OF 1-18-79)	72-B	△9
REACTOR VESSEL SUPPORT COOLERS 1-3/1-4	ADDED -DRAIN WITH IT-43 VALVES, COOLING WATER SUPPLY LINE-2315 (PER DCO-EM-150 OF 10-26-78)	73-E	△9
BLOWDOWN SAMPLE COOLERS-SC-55&56	ADDED -PIPE SPEC S-3/4 AT SC-55 & 56 INLET; AND SC-56 OUTLET. (OMITTED, DRAFTING ERROR)	95-C	△9
MISC SERV CLG WATER SUPPLY AND RETURN	ADDED -SUPPLY LINE-4172, DISCH LINE-4173 AND ASSOCIATED VALVES FOR STEAM GEN BLOWDOWN HE-27 CONDENSER. (PER DCO-EM-059R1 OF 8-31-78)	96 B TO D	△9
SEALWATER, LET-DOWN & SPENT FUEL PIT HEAT EXCH.	ADDED -FE-145,146 & 147 CROSS REFERENCES TO INSTR SCHEM 102032 WHERE ADDITIONAL FI-195,196 & 197 ARE SHOWN (PER DCO-EM-001 OF 6-6-78)	91,93&96-C	△9

E | D | C | B | A

P. G. & E. CO.	102014	CHANGE 10
SHEET 12 OF __ SHEETS		

RM INDEXED REV 10

SYSTEM OR EQUIPMENT		DESCRIPTION	COORDINATES
		CHANGE 10 DECEMBER 10, 1980	
		BY: J DICKINSON, T OSTING & B REED	
COMPONENT COOLING WATER HEADER "B"	ADDED	-NOTE INDICATING ITEM 20 VALVE (LINE K-02-203) BE SEALED OPEN, PREVENTING ISOLATION OF CCW PUMP 3-1. (PER DCO-EM-461 OF 11-9-79)	50-C
COMPONENT COOLING WATER PUMPS RECIRC	DELETED	-FLOW ELEMENTS: FE-66, FE-87 & FE-66. (PER DCO-EM-304 REV 1 OF 1-4-80)	51-E,53-E 55-E
COMPONENT COOLING WTR PP 1 2 DISCH. TO HT EXCH 1-1	DELETED	-NOTE INDICATING DRAIN INSTALLED ON UNIT 2 ONLY (LINE K-55-303) INFORMATION WAS REDUNDANT	55-E
COMPONENT COOLING WTR PP 1-2 DISCH. TO HT EXCH 1-2	ADDED	-DRAIN ON LINE K-56-50, ITEM-4 SPEC 0729. (PER DCE-EM-182 OF 7-20-78)	55-D
CCW THERMAL RELIEF VALVES	ADDED	-FLANGES TO FACILITATE REMOVAL FOR BENCH TESTING AFFECTED VALVES AND SHEET COORDINATES ARE:	

RV-NO	COOR	RV-NO	COOR
RV-306	52-A	RV-311	76 C
RV-47	81-C	RV-313	77-C
RV-303	82A-C	RV-304	80-C
RV-302	82A D	RV-305	81-C
RV-193	85A-B	RV-194	87-B
RV-43	70 C/D	RV-187	88-B
RV-21	72 C/D	RV-188	90 B
RV-192	73 A/B	RV-45	92-B
RV-42	73 C/D	RV-189	93 B
RV-44	74 C/D	RV-55	97-B
RV-307	75 C	RV 52	98 C
RV 309	75-C	RV-46	105-C

(PER DCO-EM-323 OF 8-20-79)

BORIC ACID EVAPORATOR	ADDED	-SAMPLE COOLER TO BOTTOMS SAMPLING SYSTEM OF B A. EVAPORATOR & BASTE CONCENTRATOR. SC-47 & SC-46. (PER DCO-EM-500 OF 3-29-80)	82-C,80-C
STEAM GENERATOR BLOWDOWN TANK	REVISED	-ITEM 79 CHECK VALVE INSTALLED DOWNSTREAM OF STOP VALVE ON DISCHARGE FROM SAMPLE COOLER (LINE K-4133-3/4) (PER DCO GM-1649 OF 10-8-79)	96-B
RHR PUMP SEAL WATER COOLER	REVISED	-UNIT 2 ONLY VENT VALVE WAS ITEM 51. NOW ITEM 11 (PER FCE 6-328 OF 3-14-78. ISO 10-403(51.))	108-C
POST-LOCA SAMPLE COOLERS	ADDED	-PROVIDED CONNECTIONS FROM EXISTING COMPONENT COOLING WATER SYSTEM TO NEW POST-LOCA SAMPLE COOLERS: LINES K-4145-1 & K-4146-1 INCLUDING 2 STOP VALVES (ITEM 41) (PER DCO EM 670 REV.1 OF 10-7-80)	84-C, 104/105-E
DWG SHT NUMBERS	REVISED	-SHT NUMBERING AS FOLLOWS:	

OLD	1 OF 34	44	46	10 OF 32		—	UNITS AS INDICATED
NEW	1 OF 35	11	12	— 10 —		13	

NOTE: TOTAL NO OF SHEETS ON EVERY DWG SHEET DELETED.

		CHANGE 11 JULY 29, 1981	
		BY: R. MARTON/R. THOMSON/T. OSTING/B REED	
CHEMICAL ADDITIVE TK 1-1/2-2, 1 2/2-1	REVISED	PIPING CODE CLASS C TO E DOWNSTREAM OF ITEM 41 ISO VALVE ON LINE 101 & 102 & UPSTREAM OF ITEM 50 ISO VALVE ON LINE 1964 & 1967 (PER DCO-EM-915 OF 2-11-81)	50-D&E 50-D&E

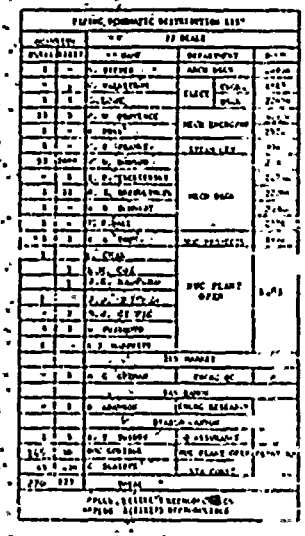

FRONT	1	2	3	4	5	6	7	8	9	10	11
BACK	12	13	14	15	16	17	18	19	20	21	22

NO OF 15 SHEETS.

PROCEDURE NO 72-15GA

P. G. & E. CO.	DRAWING NUMBER	REVISION
SHEET 15 OF 15 SHEETS	102014	11

RIM WORLD REV 11

ITEM K

THERMAL MODES & PRESSURES

PACIFIC GAS AND ELECTRIC COMPANY

MECHANICAL AND NUCLEAR ENGINEERING DEPARTMENT

Subject: Diablo Canyon Unit 1
Seismic Analysis 4A-26 (Line Nos. 1-K-3289-2 1/2 [C] & 1-K-2297-6 [C])
Thermal Modes and Pressures

MADE BY: Paul Unsitsing DATE: 11-19-81

CHECKED BY: [illegible] DATE: [illegible]

APPROVED BY: [illegible] DATE: 11/19/81

1. DESIGN CONDITIONS

Temperature = 125°F Pressure = 165 psia

Source: Flexibility Analysis 66, Rev. A Issue Date: August 22, 1974
Line Designation Table, Appendix I, Design Criteria Memorandum M-9
10-1-81 Revision

Seismic Analysis 6-11 Review Information
Table of Contents

ITEM A: Seismic Analysis 6-11 Isometric Drawing
Design Review Isometric - PGandE Dwg. 437989 (Safety Injection, Loop 1&2)

ITEM B: Hanger Details and Summary Sheet

ITEM C: Piping and Insulation Specifications

ITEM D: No Valves Involved with Analysis 6-11

ITEM E: Horizontal and New Vertical Hosgri Response Spectra Seismic Analysis 6-11

ITEM F: Seismic Anchor Movements (Blume Report)

ITEM G: Design Change Notices will be sent as they become available

ITEM H: File 33 Forms (Hanger Load Tabulation)

ITEM I: Containment Penetration Allowables

ITEM J: Schematic Diagrams and Piping and Instrumentation Diagrams (P&ID's)

ITEM K: Pressures, Thermal Modes and Anchor Movements

ITEM L: No Additional Dynamic Loading Conditions for Analysis 6-11

ITEM A

DESIGN REVIEW ISOMETRIC

SEISMIC ANALYSIS ISOMETRIC

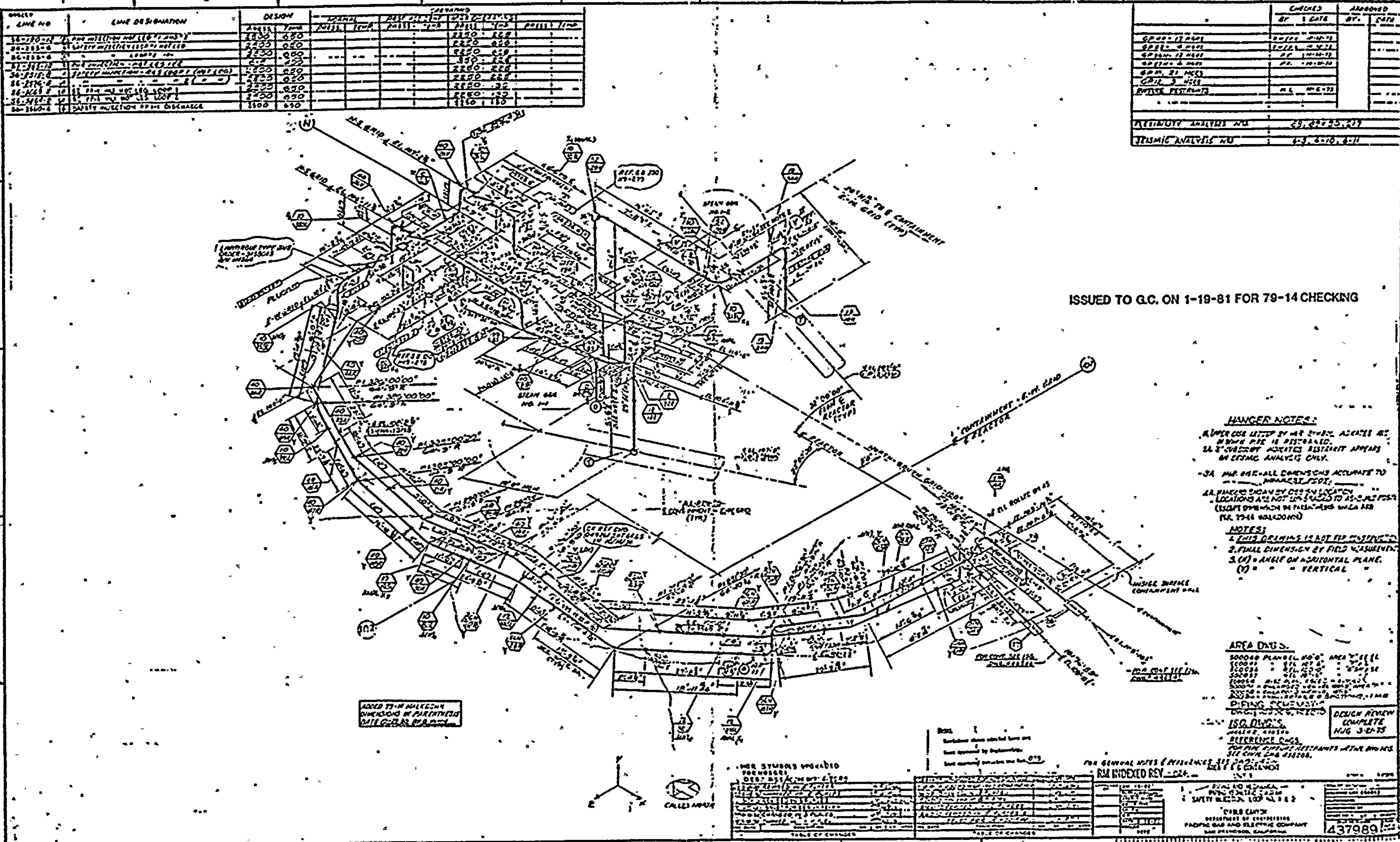

ISSUED TO G.C. ON 1-19-81 FOR 79-14 CHECKING
HANGER NOTES:
NOTES:
AREA DWGS.
PIPING SCHEMATIC
ISO. DWG'S.
REFERENCE DWGS.
DESIGN REVIEW COMPLETE
RM INDEXED REV.
TABLE OF CHANGES
FLEXIBILITY ANALYSIS NO.
SEISMIC ANALYSIS NO.
LINE DESIGNATION
DESIGN
CHECKED
APPROVED
DIABLO CANYON
PACIFIC GAS AND ELECTRIC COMPANY
437989

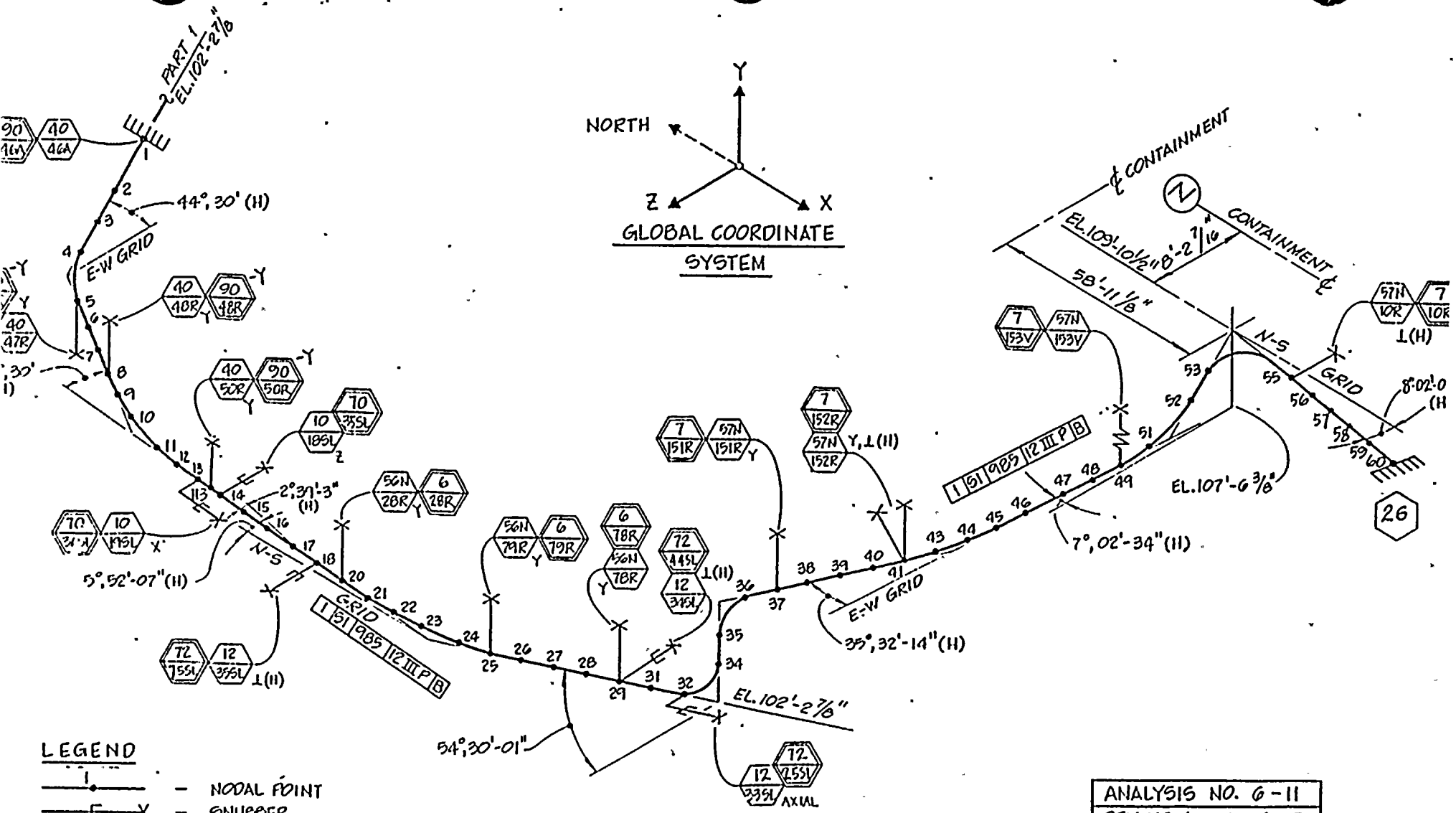

LEGEND

- NODAL POINT
- SNUBBER
- FIXED END
- PINNED END.
- SPRING HANGER
- UNIT 2 HANGER

PG&E REF. DWG. NO. 437989

NOTE:
SIGN REVERSAL REQUIRED FOR UNIT 2
(THIS IS A UNIT 1 CONFIGURATION)

HANGER SYMBOLS AND CONFIG. VERIFIED BY ... DATE 11-30-81
AGREEMENT WITH ANALYSIS VERIFIED BY ... DATE 11-30-81
SNUBBER SYMBOLS VERIFIED BY ... DATE 11-30-81

ANALYSIS NO. 6-11	
REV. NO. 6	11-30-81

DIABLO CANYON NUCLEAR POWER PLANT UNIT 1 & 2
SAFETY INJECTION RCS
LOOP NO. 1 & 2, PART - 3

ITEM B

HANGER DETAILS WITH SUMMARY SHEET

ANALYSIS 6-11

HANGER NO.	PGandE DRWG. NO.	SHEET NO.	REV.	FILE 33 REV.
10-18SL	049308	26, 26A	3A	0
10-19SL	049308	27, 28	4	0
12-33SL	049310	52	2	0
12-34SL	049310	53	3	0
12-35SL	049310	54	2	0
40-46A	049252	9, 9A, 9B	2B	4
40-47R	049252	11, 11A	2	4
40-48R	049252	12, 12A, 12B, 12C	2	4
40-50R	049252	13, 13A 13B, 13C, 13D 13E, 13F	2	4
56N-28R	049261	68	1	2
56N-78R	049261	69	1	2
56N-79R	049261	70	1	2
57N-10R	049263	152	1	4
57N-151R	049263	115	1	3
57N-152R	049263	116, 117	2	4
57N-153V	049263	118	1A	3

Look for VCR 5-6-12
76-813 A-B incorporated for Issue 3

AREA 1F	LINE 1-SI-985-12 III P [B]	HANGER SYMBOL 10 / 18SL
EL. 100'-0"	NOS.	LOC. ON DWG. 500040

	LINE NO.	1-SI-985-12 III P
SEISMIC	RESTR. X, Y, Z	Z
	ANAL. NO. & DATE	6-71 / 7-2-73
	DATA POINT	14
	FORCE DE = 443#, DOE = 886# HOS = 2862#	
THERMAL	ANAL. NO. & DATE	880 / 3-8-74
	DATA POINT	40-45
	NORM. MVMT. ΔX, ΔY, ΔZ	0.32, 0.00, 3.01
	INCID. MVMT. ΔX, ΔY, ΔZ	0.27, 0.00, 3.04

DESIGN CLASS I
CODE CLASS B
FOR CONT. SEE SH. 26A
CALLED NORTH

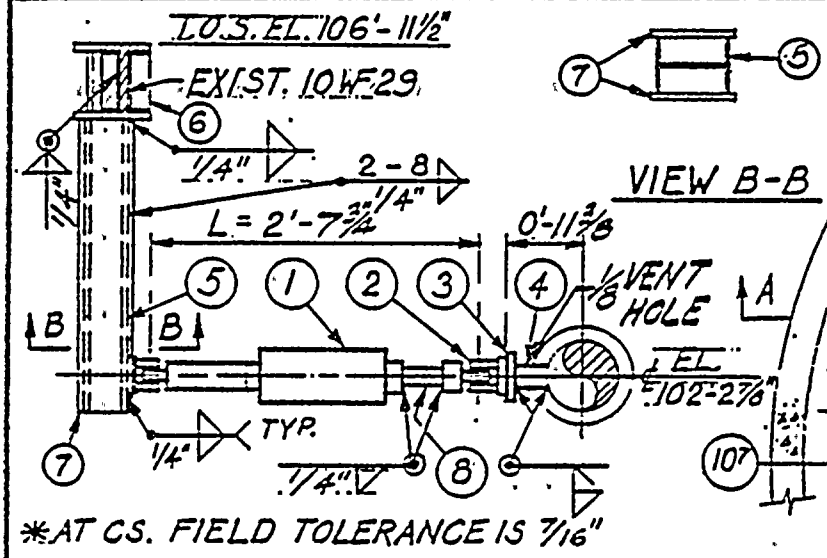

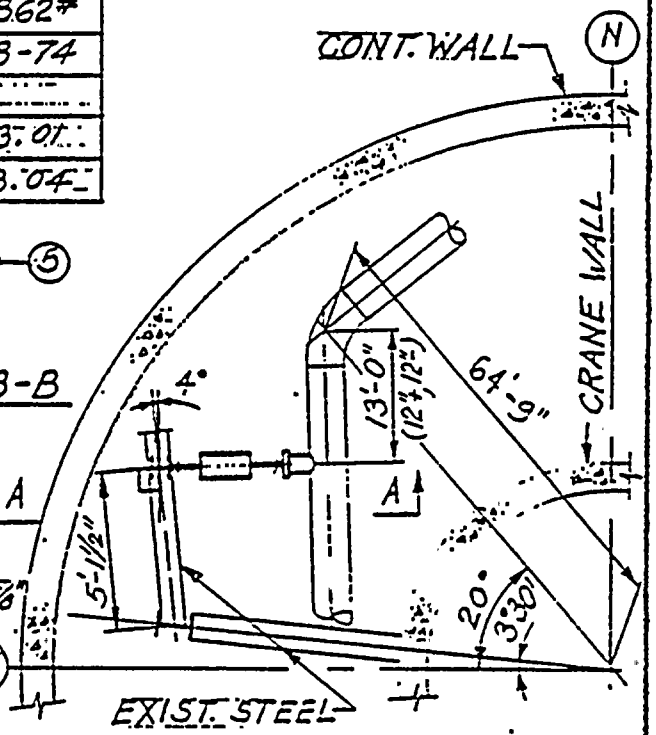

NO. OF ASSEMBLIES REQUIRED 1

NO.	REQD	MATERIALS
1	1	PSA-3, 3 1/16" RETR. STROKE, CS. = 3 7/8"; * HS = 1" SN 232
2	1	REAR BRACKET FOR PSA-3
3	1	C.S. BAR 5" x 1/2" x 5"
4	1	3" ø PIPE SCH. 40 S.S., 45 1/8" LG. CUT TO FIT
5	1	4WF13, 4'-1 3/4" LG.
6	2	(1) R 9 3/8" x 1/2 x 2 3/4" (2) 3 1/16 x 2 3/4 x 1/2"
7	2	R 5 1/8" x 1/2" x 4'-2 1/8"

AS BUILT
FOR DESIGN REV.
RECEIVED OCT 22 198

1-RELOCATED & CHANGED ITEM 1 TO PSA-3, ADDED ITEMS 2, 3, 4, 5,
CHG-2: ADDED ITEMS 6 & 7
CHG. 3 ADDED SEISM. DATA & IT. 9, 10, 11, 12. SH. 26A, IT. 8 SPECIFIED

DIABLO CANYON UNIT I	P G & E CO.	DRAWING NO. 049308 REV. 3A
	SHEET 26 OF SHEETS	

DSGN Z.T. 3 Z.T.
CHG. 2: D.W. CH 4-18-80
CHKD: CHG 01 [illegible] 3 [illegible]
2 [illegible] 5 [illegible] 4/22/80

RM INDEXED REV. 3

35 MIM REG. 3

AREA 1F	LINE 1-SI-985-12 III P B	HANGER SYMBOL 10/185L
EL. 100'-0"	NOS.	LOC. ON DWG. 500040

REFER TO SH. 26

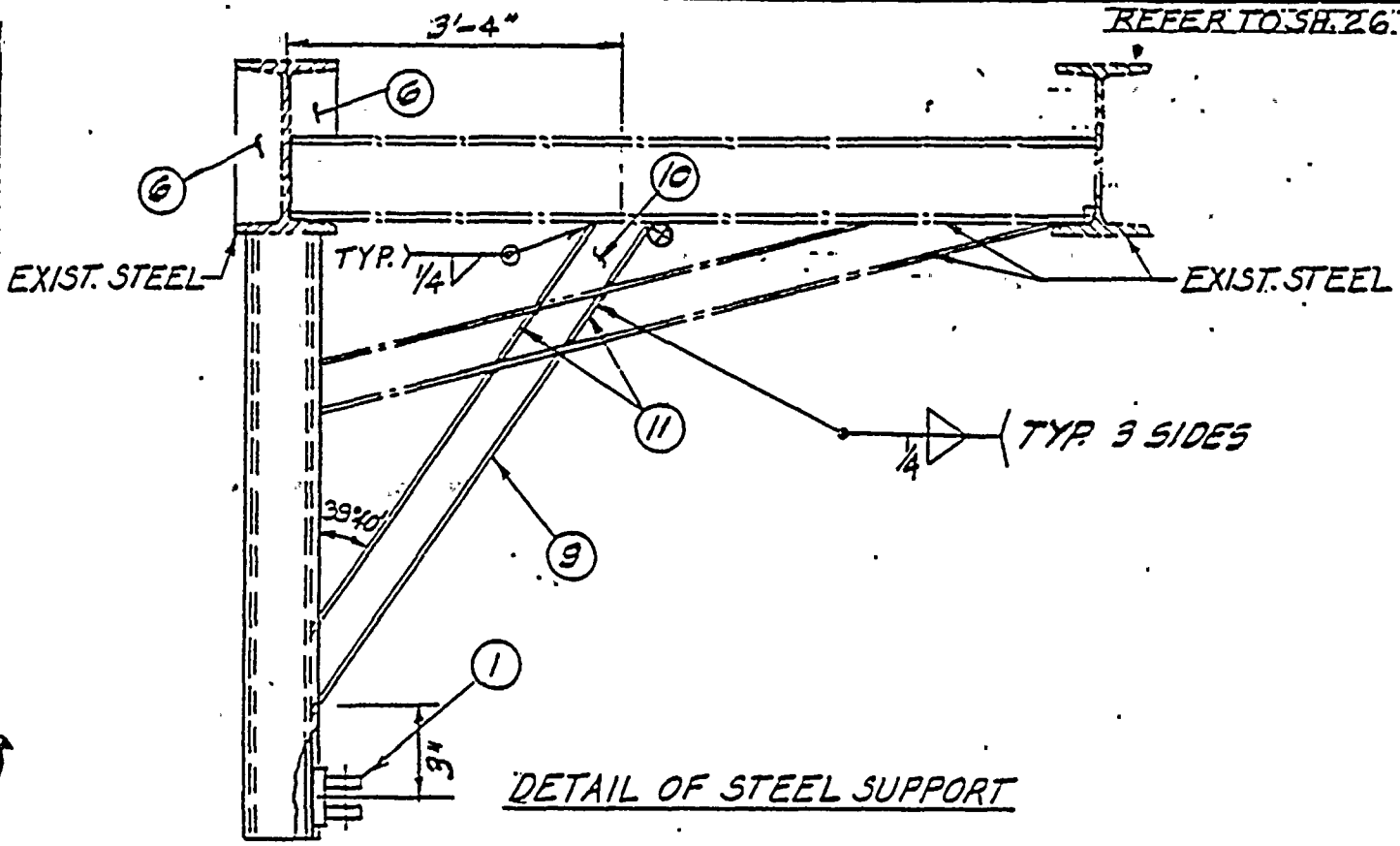

DETAIL OF STEEL SUPPORT

⊗ = INNACCESSABLE WELD

AS - BUILT
FOR DESIGN REVIEW
RECEIVED OCT 22 1981

8	1	PIPE 1.9" O.D. x 0.145" WALL CS 9' LONG
9	1	M4 X 13 3'-6 1/2" LG.
10	1	M4 x 13 0'-9 1/2" LG
11	4	PL 12" X 3/8 X 3"
~~12~~	—	—

P G & E CO. | DRAWING NO. 049308 | CHANGE 3A
SHEET 26A OF SHEETS
DIABLO CANYON UNIT #1

C.H. 4-18-80 CHKD: SJ 4/22/80

35 M/M NEG. 3 RM INDEXED RE 3

AREA I.F.	LINE 1-SI-985-12"P[B]	HANGER SYMBOL 10 / 195L
EL. 100'-0"	NOS.	LOC. ON DWG. 500040

	LINE NO.	1-SI-985-12"P[B]
SEISMIC	RESTR. X, Y, Z	X
	ANAL. NO. & DATE	6-11 / 7-2-73
	DATA POINT	14
	FORCE (F_y) DE = 1787#, DDE = 3574#, HOS = 7516#	
THERMAL	ANAL NO. & DATE	88C / 3-8-74
	DATA POINT	42
	NORM MVMT. ΔX, ΔY, ΔZ	0.26", 0.00", 3.17"
	INCID MVMT. ΔX, ΔY, ΔZ	0.24", 0.00", 3.13"

DESIGN CLASS I
CODE CLASS B

CALLED NORTH

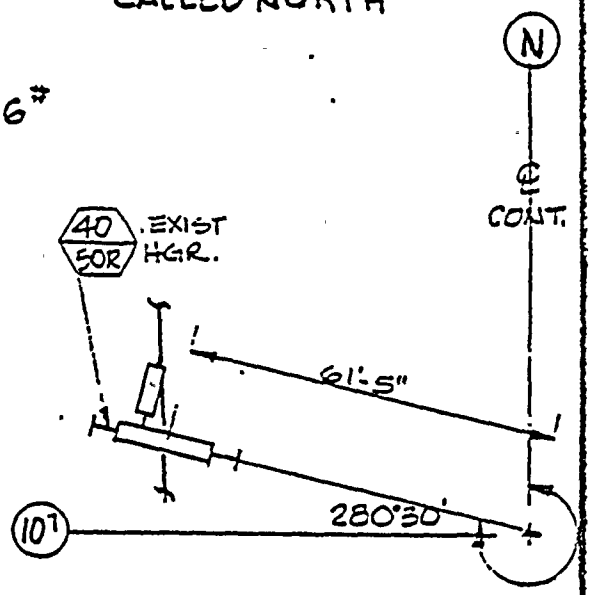

LOCATION PLAN

AS-BUILT
FOR DESIGN REVIEW
RECEIVED OCT 23 1981

CHG 4: ADDED ITEMS 6, 7 & 8, WELD SYMBOLS & VIEW C-C REV. PLAN VIEW

CHG. 3: REVISED PER M-1012 M. W. KELLOGG "AS-BUILT" ITEM 135 (M-2818) ADDED SEISMIC DATA ITEM-1, ADDED NF-SNUB, 4/8 6-20-81 4

FOR CONTINUATION SEE SHEET 28

NO. OF ASSEMBLIES REQUIRED 1

NO.	REQD	PSA SERIAL Nº 3853 MATERIALS
1	1	PSA-3, 5/16" RETR. STROKE, C.b. = 1 1/16", H.b. = 3/4", NF-SNUB
2	1	4 WF13, 4'-0" LG, BY MWK
3	1	PL 7 5/8 x 6 x 1/2" S.S., BY MWK
4	1	PL 7 5/8 x 4 x 1/2" S.S., BY MWK
5	1	REAR BRACKET FOR PSA-3
6	1	8 WF 17, 4'-0" LG, CUT AS SHOWN
7	2	PL 1 7/8" x 3/8" x 7 5/16"
8	1	BAR 1 7/8 x 3/8, 0'-3 3/8" LG.

DIABLO CANYON UNIT 1 | SHEET 27 | 04930 A | 4

ENGR D.W. 3 - P.M. 4 - P.H. | NEG 5 | R.W. 4-18-80 | 2 | 3 | 4: F.K.

RM INDEXED RE 4

35 M/M NEG. 4

AREA 1-F	LINE 1-61-985-12 III P B	HANGER SYMBOL 10 / 1961
EL 100'-0"		LOC ON DWG 500040

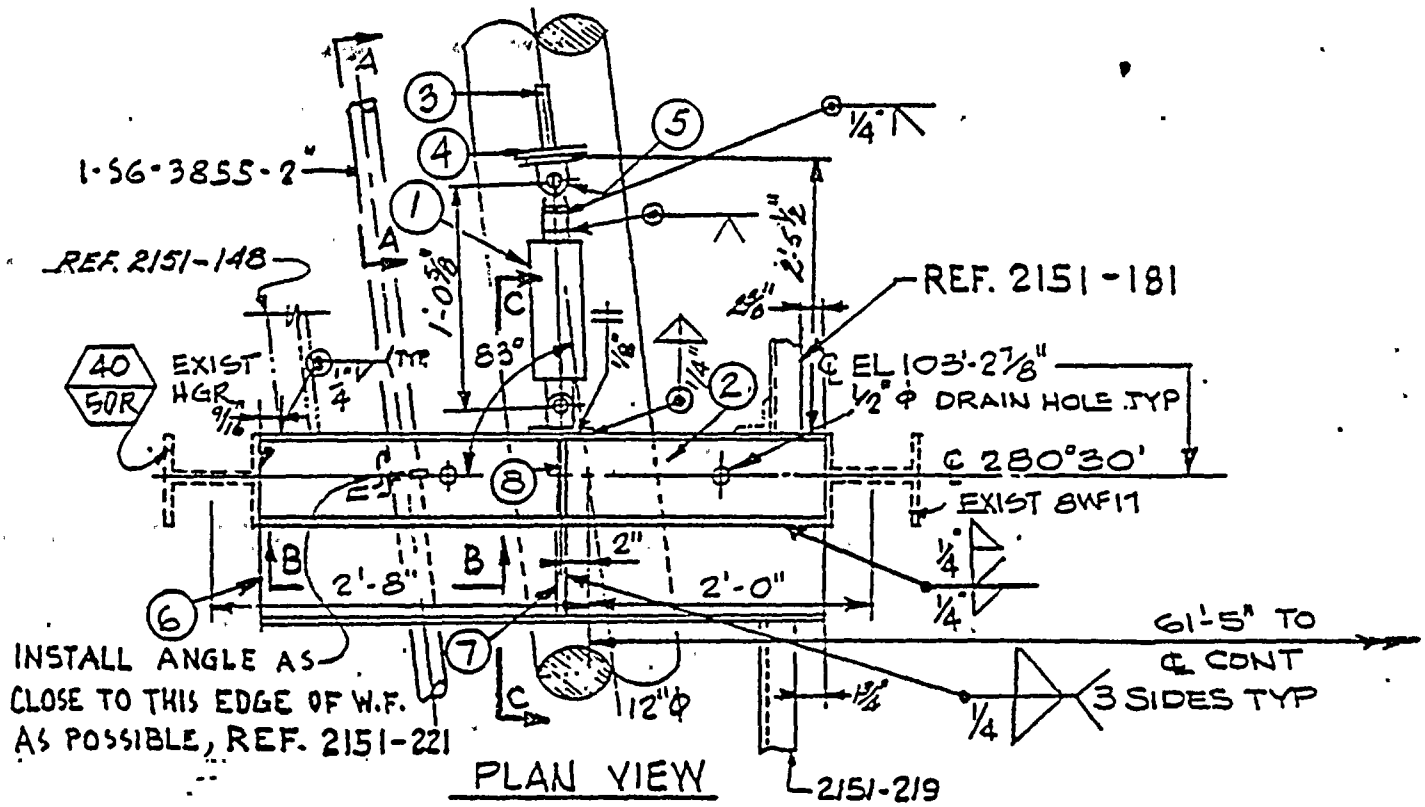

PLAN VIEW

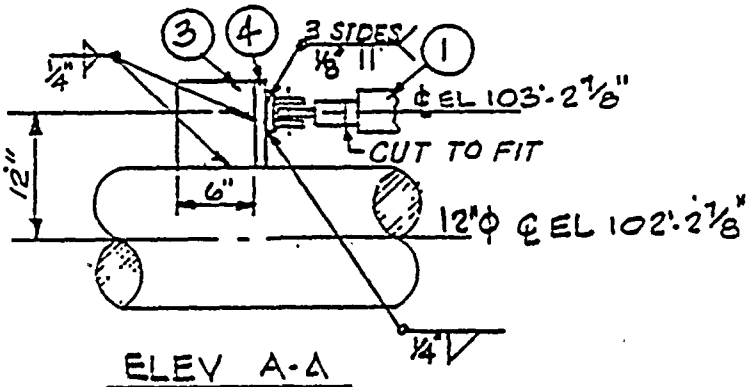

ELEV A-A

AS - BUILT
FOR DESIGN REVIEW
RECEIVED OCT 23 1981

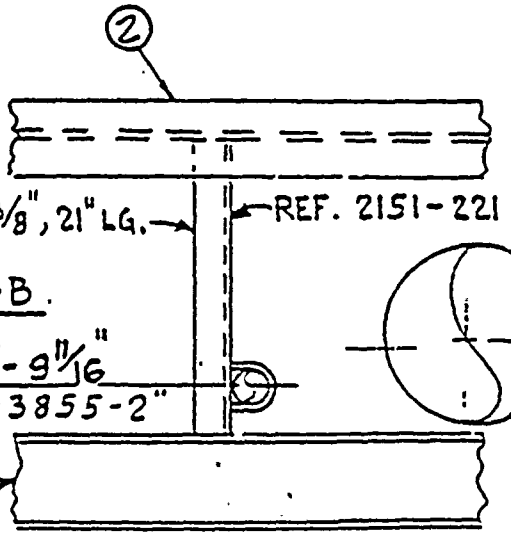

ELEV. B-B

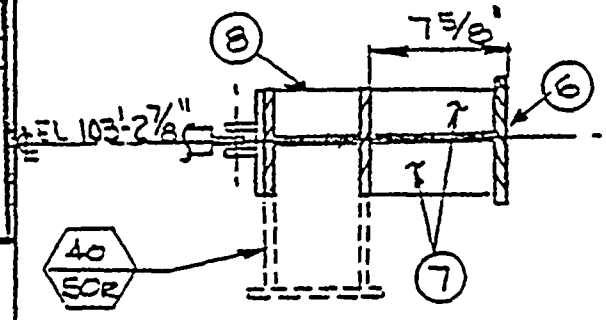

ELEV. C-C

RM INDEXED RE 4

35 MM NEG. 4

P G & E CO.	49308	CHANGE 4
SHEET 28 OF SHEETS		

R.W. 4.18.80 TWEWW 9-21-80

AREA 16	LINE 1-SI-985-12 III P B	HANGER SYMBOL 12 / 33SL
EL. 100'-0"	NOS.	LOC. ON DWG. 500056

	LINE NO.	1-SI-985-12 III P B	
SEISMIC	RESTR. X,Y,Z	AXIAL	
	ANAL. NO. & DATE	6-11	7-2-73
	DATA POINT	33	
	FORCE	DE=2,791# DE=5582# HOS=6,837#	
THERMAL	ANAL. NO. & DATE	88C	3-8-74
	DATA POINT	31	
	NORM. MVMT. ΔX,ΔY,ΔZ	0.78"	0.00" 3.28"
	INCID. MVMT. ΔX,ΔY,ΔZ	-0.04"	0.00" -0.10"

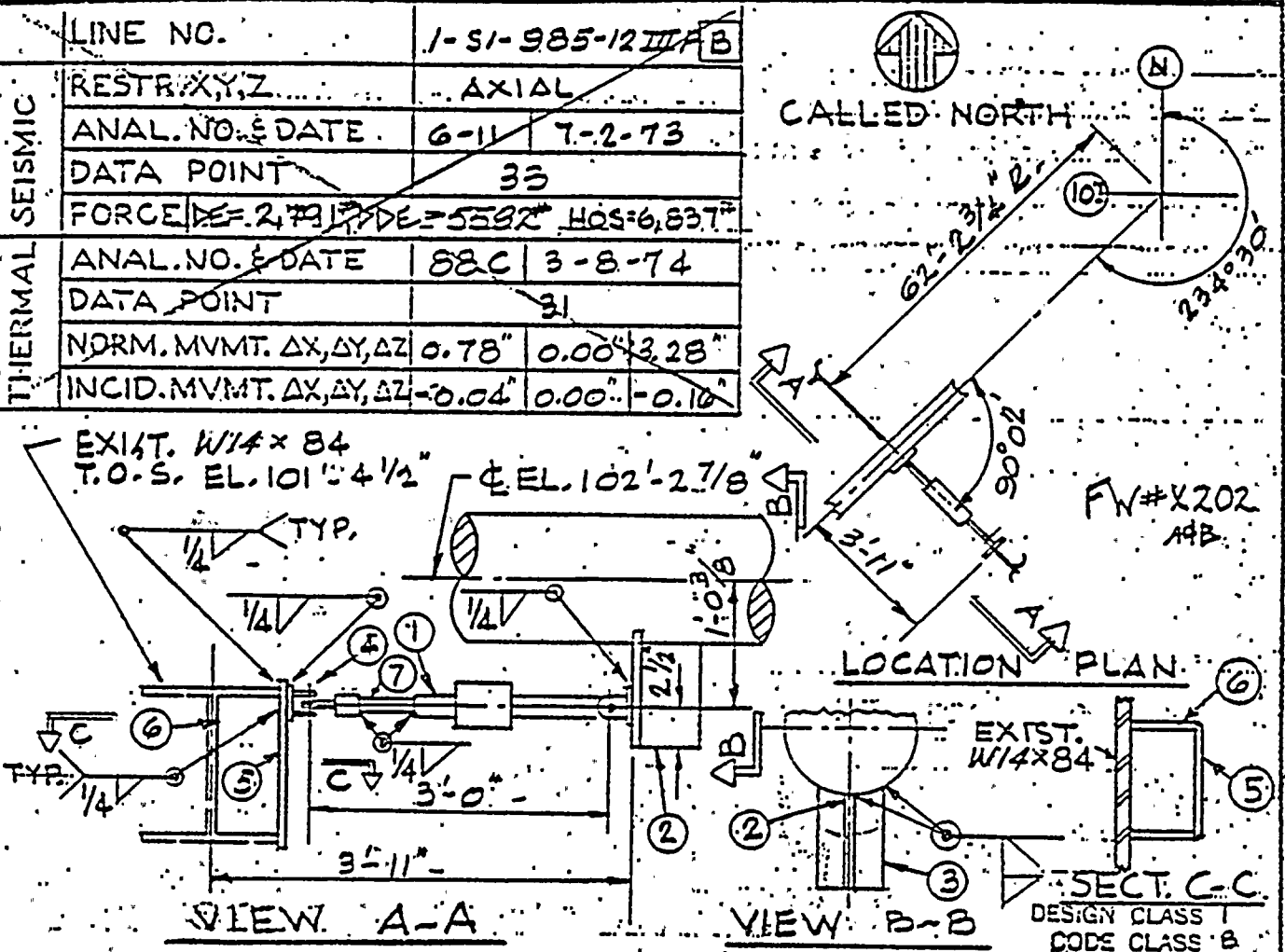

NO. OF ASSEMBLIES REQUIRED 1

NO.	REQD	PSA 3 SER. № 385 MATERIALS	
1	1	PSA-3(NF), 1 3/8" RETRACTED STROKE, C.S. = 3", H.S. = 1 5/8"	
2	1	S.S. BAR 5" × 1/2" × 0'-7" LG.	
3	1	S.S. BAR 5 × 1/2" × 0'-10" LG. CUT TO FIT	AS-BUILT
4	1	REAR BRACKET FOR PSA-3	FOR DESIGN REVIEW
5	1	C.S. BAR 6" × 1/2" — 1'-4" LG.	RECEIVED OCT 22 1981
6	2	BAR 5 9/16" × 1/2" — 1'-0 5/8" (CUT TO FIT)	
7	1	1 1/2" ϕ SCH. 40 EXT. PIPE, FIELD TO FIT	

CHG 1: APPROVED FOR CONSTRUCTION
CHG. 2: REV. SEIS. DATA, CHG'D ITEM 1 FROM PSA-3 TO PSA-3 (NF), ADDED ITEM 6

UNIT NO. 1 - DIABLO CANYON SITE

P G & E CO. SHEET 52 OF SHEETS

DRAWING NO. 049310 REV. 2

T. H.
2-TH

DHKD: CHG 1 2.

35 M/M Neg. 2

AREA	LINE 1-SI-985-12III P	HANGER SYMBOL 12 / 34SL
EL. 100'-0"	NOS.	LOC. ON DWG. 500056

	LINE NO.	1-SI-985-12III P		
SEISMIC	RESTR. X,Y,Z	PERPENDICULAR		
	ANAL. NO. & DATE	6-11 / 7-2-73		
	DATA POINT	30		
	FORCE	DE=2,089#, ODE=4,175#, HOS=4,861#		
THERMAL	ANAL. NO. & DATE	88C	3-8-74	
	DATA POINT	31		
	NORM. MVMT. ΔX,ΔY,ΔZ	0.78"	0.00"	3.28"
	INCID. MVMT. ΔX,ΔY,ΔZ	-0.04"	0.00"	-0.16"

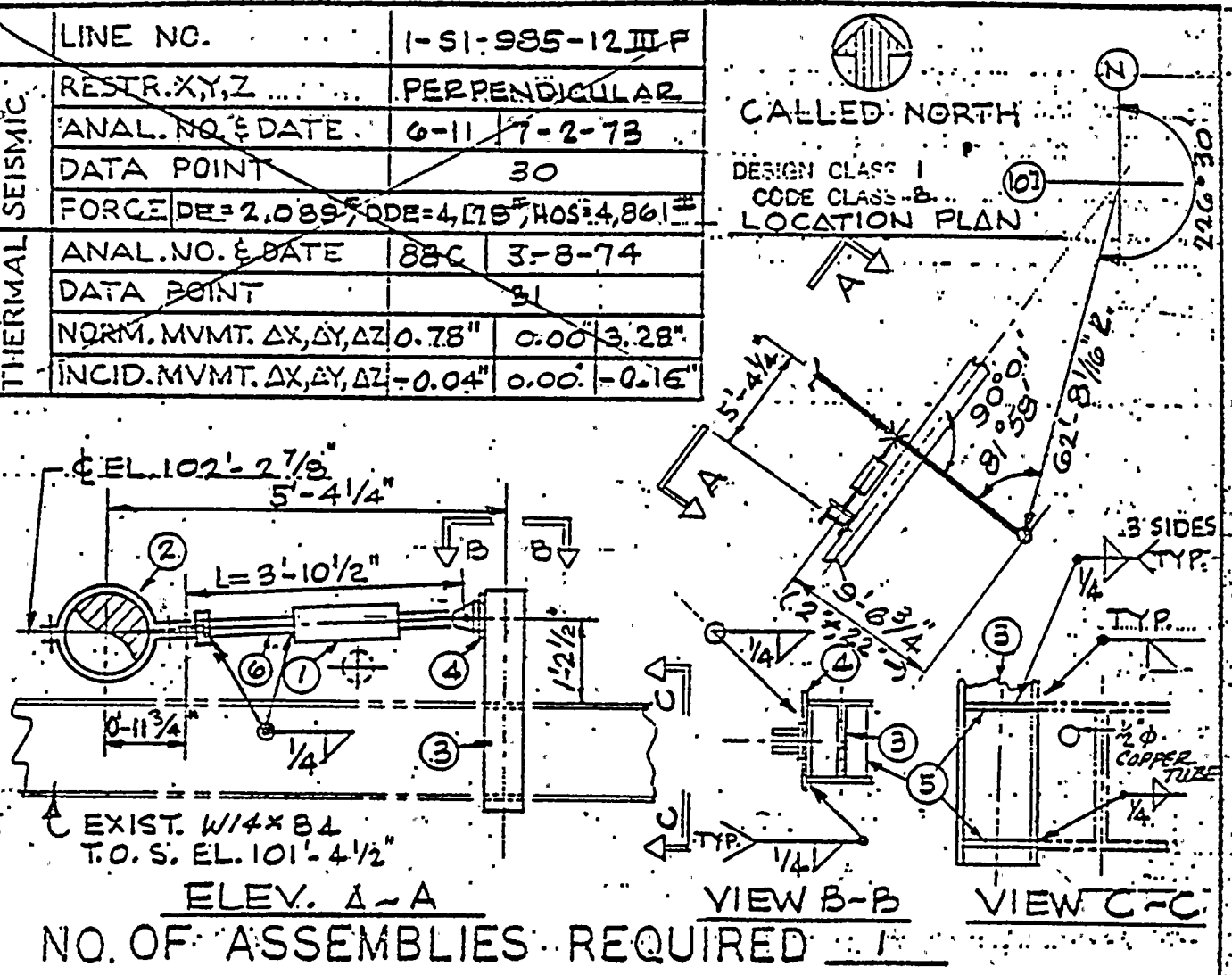

NO. OF ASSEMBLIES REQUIRED 1

NO.	REQD	MATERIALS
		PSA S/N 105
1	1	PSA-3, 3 1/4" RETR. STROKE, C.S.=4 1/8", H.S.=7/8"
2	1	12" PIPE CLAMP
3	1	W8x28 — 3'-0" LG.
4	1	BAR 6"x1/2" — 0'-10" LG.
5	4	BAR 3"x1/2" — 0'-7 1/8" LG, CUT TO FIT.
6	1	PIPE 1.900" O.D. x 0.145" WALL, C.S., 2'-3" LG. CUT TO FIT.

AS BUILT
FOR DESIGN REVIEW
RECEIVED OCT 22 1981

CHG. 3: REV. SEIS. DATA, ADDED ITEM 5, SPECIFIED ITEM 6

CHG. 1: REVISED ITEM 2 AND "L" DIM.

CHG. 2: REVISED PER M. W. KELLOGG "AS-BUILT" ECO 853 AND REV. THERM. DATA

UNIT NO. 1 - DIABLO CANYON SITE

P G & E CO. SHEET 5 OF SHEETS

DRAWING NO. 049310 REV. 3

DSGN T.H./T.S., 3-TH CHKD: CHG 01 W; I.F.K. 2-Feb 3 Feb

RAA INDEXED REV 3

35 MM NEG. 3

4-16-79

AREA 1G	LINE 1-S1-985-12 III-P B	HANGER SYMBOL 12 / 3551
EL. 100'-0"	NOS.	LOC. ON DWG. 500056

	LINE NO.	1-S1-985-12 III P
SEISMIC	RESTR. X,Y,Z	PERPENDICULAR
	ANAL. NO. & DATE	6-11 / 9-2-73
	DATA POINT	19
	FORCE	DE=193#, DDE=386#, HDS=1,232#
THERMAL	ANAL. NO. & DATE	88C / 3-8-74
	DATA POINT	37-40
	NORM. MVMT. ΔX, ΔY, ΔZ	0.75", 0.0", 4.17"
	INCID. MVMT. ΔX, ΔY, ΔZ	0.70", 0.0", 4.00"

DESIGN CLASS I
CODE CLASS B

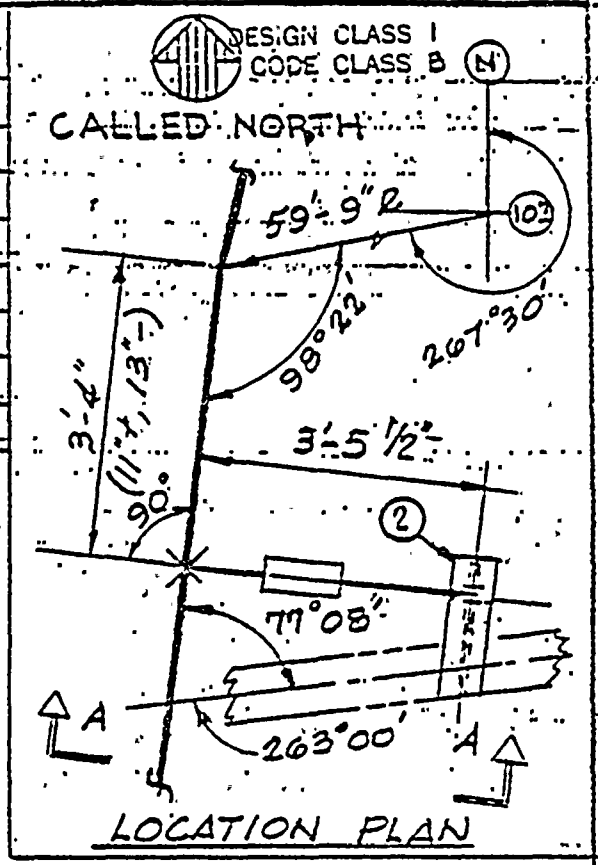

LOCATION PLAN

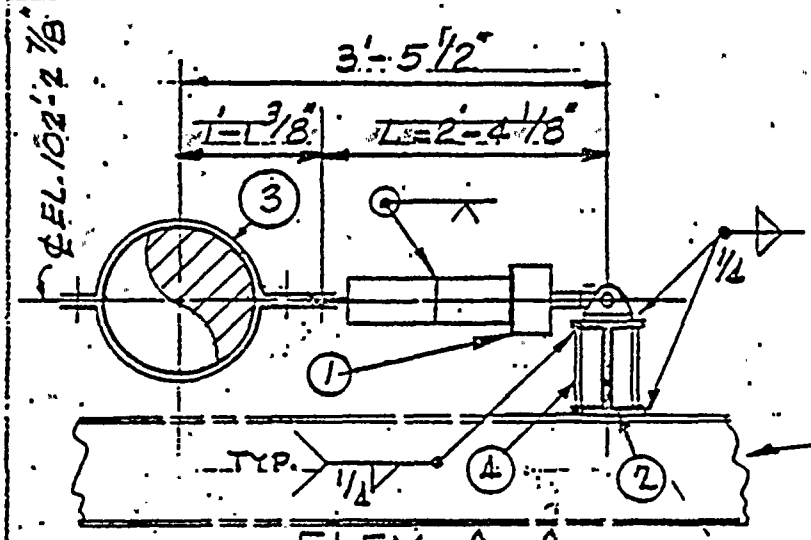

ELEV. A-A

A/B 5-12-81 2

NO. OF ASSEMBLIES REQUIRED 1

NO.	REQD	MATERIALS
1	1	PSA-10, 4" EXT. STROKE, C.S.=1 3/16" H.S.=5 3/16"
2	1	8WF28, 2'-0" LG.
3	1	12"Ø PIPE CLAMP
4	2	PL 7 1/8" x 3/8" x 2'-0" (TRIM TO FIT)

AS-BUILT

FOR DESIGN REVIEW

RECEIVED OCT 29 1981

CHG. 02: REV'D AS PER GNL. COMMENTS.
CHG. 1: APPR'D FOR CONSTR. REPLACED GNL. FIG. 200 W/PSA-10.
ADDED ITEM 3., CHG. 2: REV. SEIS. DATA, ADDED ITEM 4.

UNIT NO. 1 - DIABLO CANYON SITE

P G & E CO.
SHEET 54 OF SHEETS
DRAWING NO. 049310

DSGN T.H.; I.F.K.
2-TH

DRAWN 02 1
1 T.SKI

2 Feb

RM INDEXED REV. 2

35 MM NEG. 2

AREA PF	LINE 1-K-3243-STET	HANGER SYMBOL 40 / 40A
EL 100'-0"	1-SY-985-12 III P 8	LOC ON DWG 500040

DESIGN CLASS I
CODE CLASS A

CALLED NORTH

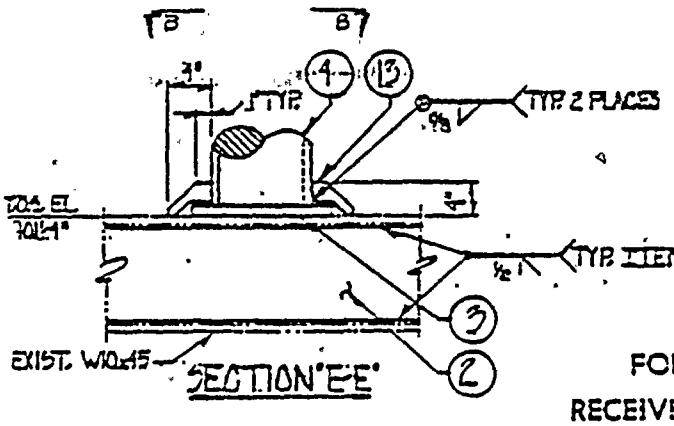

SECTION "E-E"

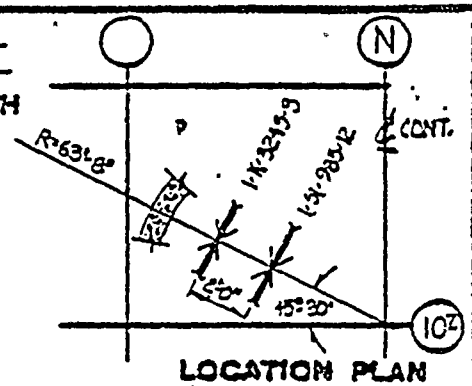

LOCATION PLAN

AS - BUILT
FOR DESIGN REVIEW
RECEIVED OCT 21 1981

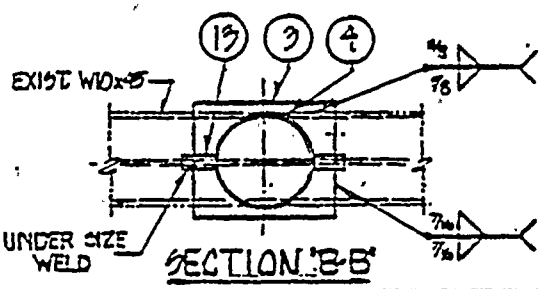

SECTION "B-B"

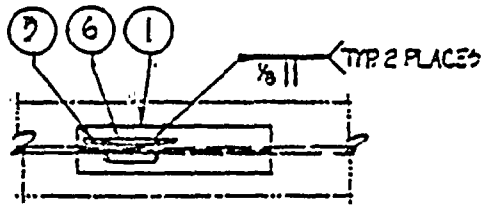

SECTION "C-C"

RPP 4/B 7-31-81 25

NO. OF ASSEMBLIES REQUIRED 1

NO	REQ'D	MATERIALS PER ASSEMBLY
1	1	M4x13.S, 1'-4 5/8" LG.
2	2	PL C.S. 3/4"x 9 1/2"x 9'-2" LG.
3	1	PL 3/4"x 10"x 1'-0" LG.
4	1	8" Ø SCH. 140 SS (316 TRACEABLE), 0'-5" LG.
5	2	L 2"x 2"x 3/8", 0'-6" LG.
6	1	L 2"x 2"x 3/8", 0'-3 5/8" LG.
7	———	DELETED
8	1	T.S. 6"x 6"x 1/2", 7'-6 3/4" LG. FIELD CUT TO FIT
9	1	PL C.S. 1/4"x 5"x 0'-10" LG.
10	4	STIFF. PL C.S. 1/2"x 3 3/4"x 10 3/4" LG.
11	2	PL C.S. 1/2"x 4"x 4" LG. FIELD CUT TO FIT
12	2	PL C.S. 1/2"x 3 5/8"x 4 3/8" LG. FIELD CUT TO FIT
13	2	PL C.S. 1"x 4"x 4" LG. FIELD CUT TO FIT

	DSGN.	DRAWING NO 049252		
	DWN. W. HUTTON 10-19-81			
	CHKD M. THURMAN 10-81			
PROJECT: DIABLO CYN.	UNIT: ONE	SHT 9 OF SHTS	P G & E CO	ISSUE 28 REV

MICROFILM

-1116 Rev 3-76

76-1117 Rev 3-76

AREA 1-F	LINE 1-K-3249-3 (E)	HANGER SYMBOL 40 / 46A
EL. 100'-0"	1-S1-985-12 III P (B)	LOC ON DWG 500040

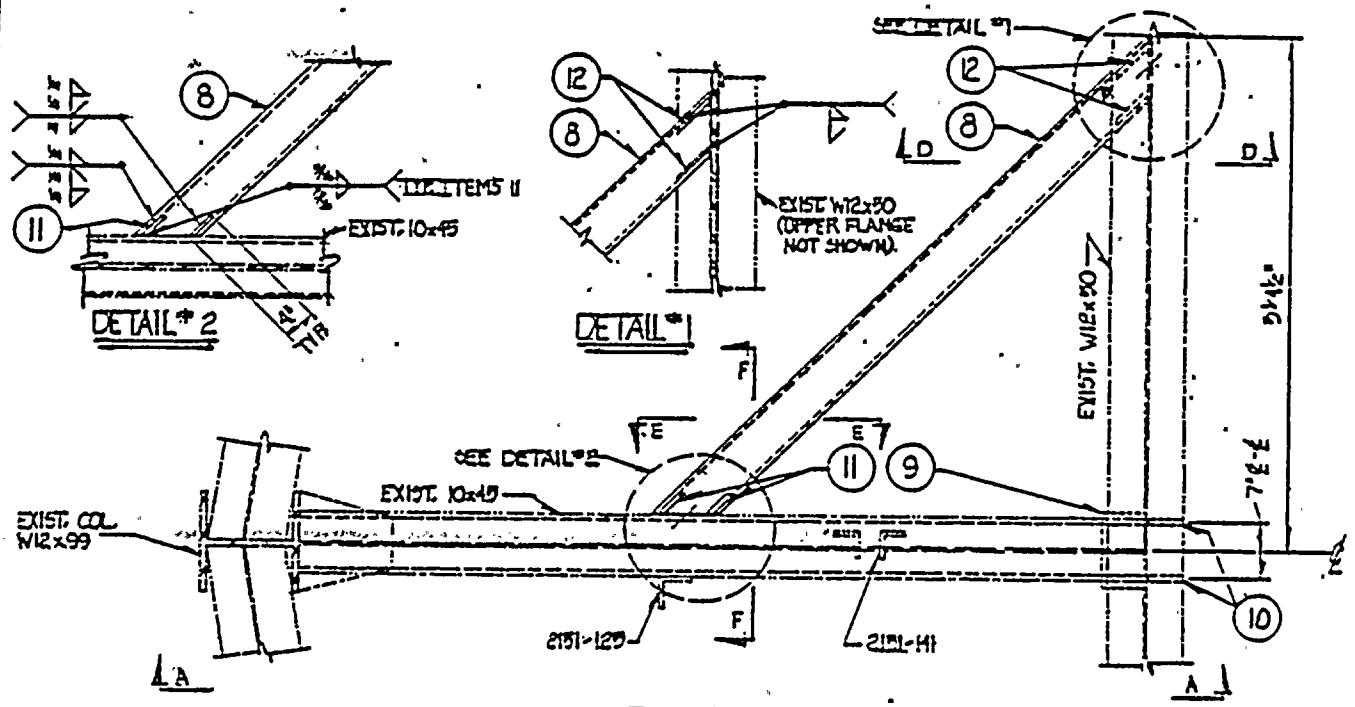

NOTE: LINE 1-K-3249
TOP = 1/8" GAP
SIDES = 1/8" GAP
BOTTOM = 0" GAP

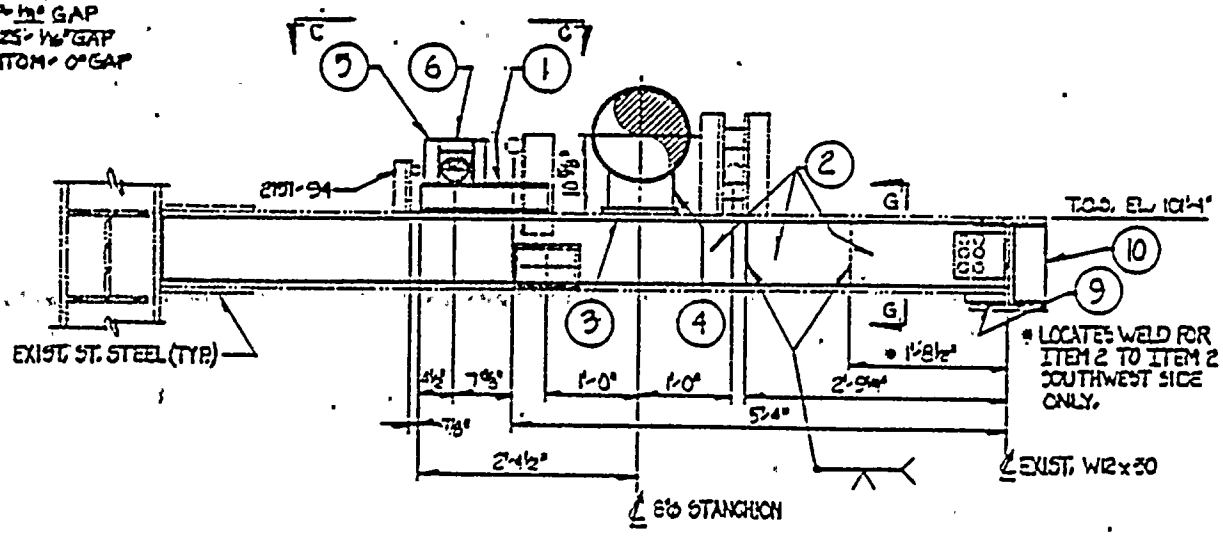

SECTION 'A-A'

AS - BUILT
FOR DESIGN REVIEW
RECEIVED OCT 21 1981

		DSGN	DRAWING NO		
		DWN W. HUTTON 10-14-81	049252		
		CHKD M. THURMAN 10-81			
PROJECT: DIABLO CYN.	UNIT: ONE	SHT 9A OF SHTS	P G & E CO	ISSUE	REV. 25
				MICROFILM	

76-1117 Rev 3-71

AREA 1-F	LINE 1-K-3213-3[E]	HANGER SYMBOL 4D / 4bA
EL 100'-0"	1-51-983-12 III [B]	LOC ON DWG 500040

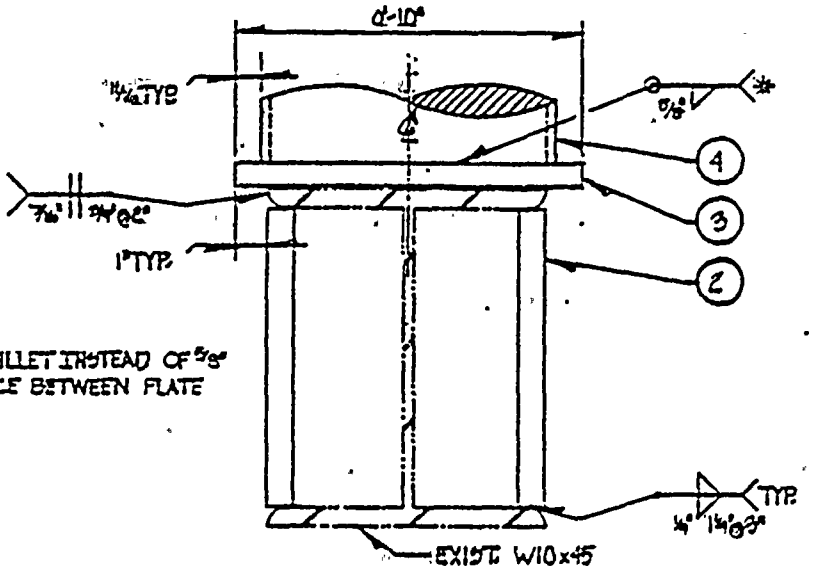

* LENGTH OF 3/16" FILLET INSTEAD OF 5/16" DUE TO INSR SPACE BETWEEN PLATE EDGE STANCHION.

SECTION "G-G"

AS - BUILT
FOR DESIGN REVIEW
RECEIVED OCT 21 1981

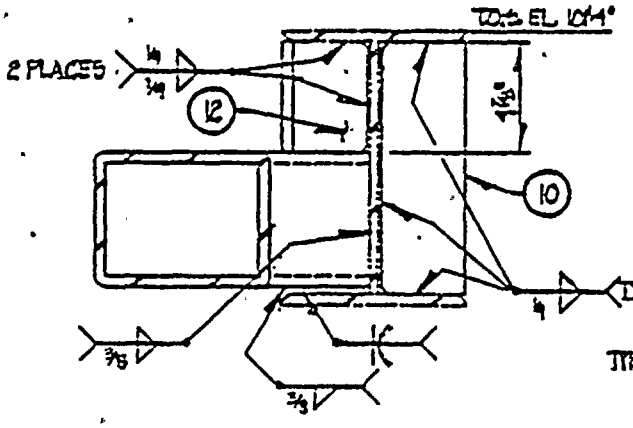

SECTION "D-D"

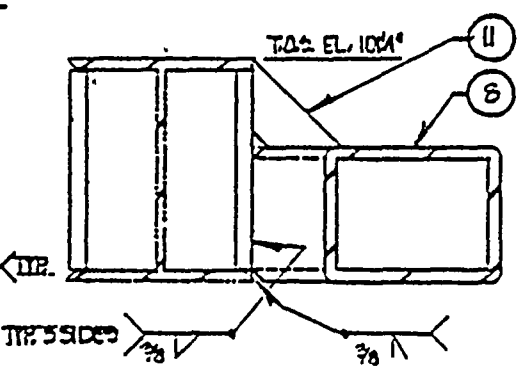

SECTION "F-F"

		DSGN	DRAWING NO 049252	
		DWN W.HUTTON 10-19-81		
		CHKD M.THURMAN 10-81		
PROJECT: DIABLO CYN	UNIT: ONE	SHT 95 OF SHTS	P G & E CO	ISSUE / REV. 23

MICROFILM

76-1117 Rev 3-76

AREA 1-F	LINE 1-K-3243-3 [E]	HANGER SYMBOL 40 / 47R
EL 100'-0"	1-51-985-12-III P [B]	LOC ON DWG 500C40

DESIGN CLASS 1
CODE CLASS B

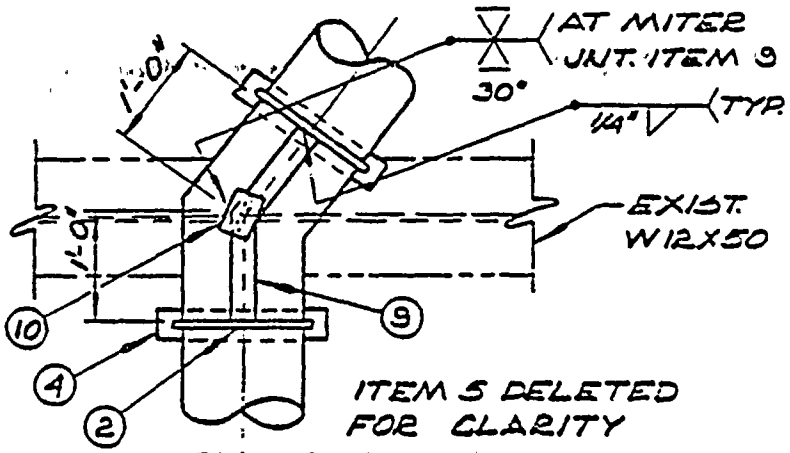

VIEW C-C

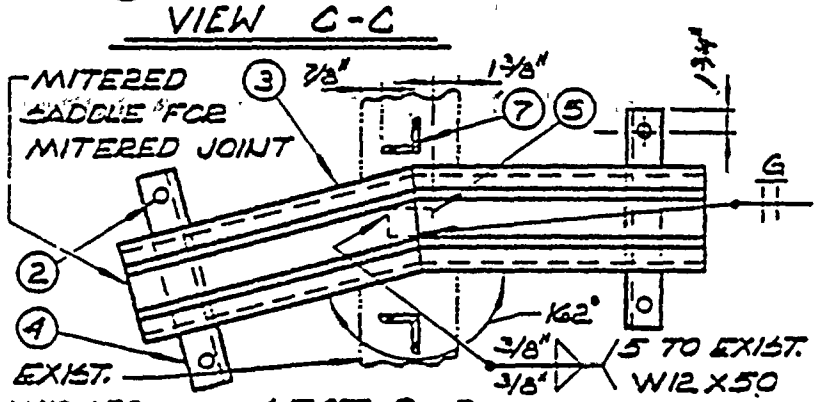

SECT. D-D

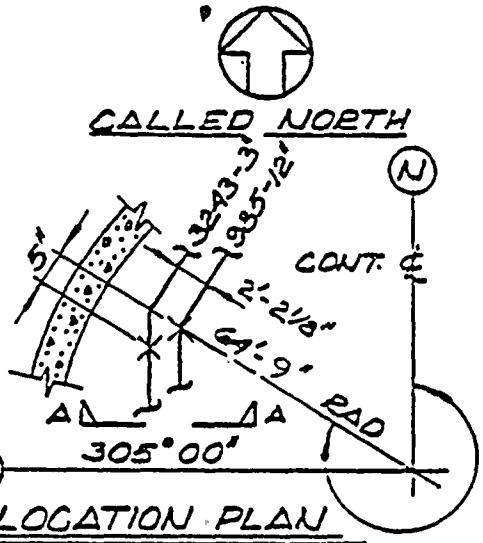

LOCATION PLAN

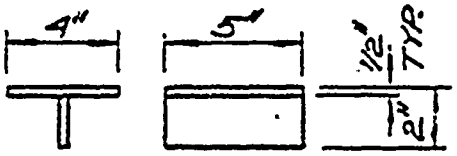

DETAIL ITEM 10

A/B 7-29-81 2

NO OF ASSEMBLIES REQUIRED 1

NO	REQD	MATERIALS PER ASSEMBLY
1	1	S3 X 5.7, 1'-0" LG.
2	2	7/8" X 12" FIG. 137 U-BOLT, D = 14"
3	1	12" Ø PIPE, FIG. 164, SADDLE 2'-6" LG. C = 10 7/8"
4	2	HS-50, L 2 1/2" X 2 1/2" X 3/8", TW = 7", C-C = 13 3/4", E = 1'-5", G = 1 3/8", H = 15/16"
5	1	BAR, 5" X 7/8" X 0'-5" LG.
6	1	BAR, 6" X 7/8" X 1'-0" LG.
7	2	L 3 1/2" X 3 1/2" X 1/2", 2'-0" LG.
8	1	L 3 1/2" X 3 1/2" X 1/2", 2'-6 7/16" LG.
9	2	BAR 3" X 1/2" X 1'-0" LG. (TRIM TO FIT MITER JOINT & O.D. OF PIPE
10	1	C.S. T-SHOE 1/2" THK. (SEE DETAIL ABOVE)
11	2	L 2" X 2" X 3/8", 0'-6" LG. (TRIM 1 LEG TO 1 3/4", ONE ANGLE ONLY)
12	1	L 2" X 2" X 3/8", 0'-3 5/8" LG.

AS - BUILT
FOR DESIGN REVIEW
RECEIVED OCT 22 1981

		DSGN	DRAWING NO	
		DWN FM 8-21-81	049252	
		CHKD [illegible]		
PROJECT: DIABLO CANYON	UNIT: ONE	SHT 11 OF SHTS	P G & E CO	ISSUE

MICROFILM

76-1117 Rev 3-76

AREA 1-F	LINE 1-K-3243-3 E	HANGER SYMBOL 40 / 472
EL 100'-0"	1-51-985-12-III P 8	LOC ON DWG 500040

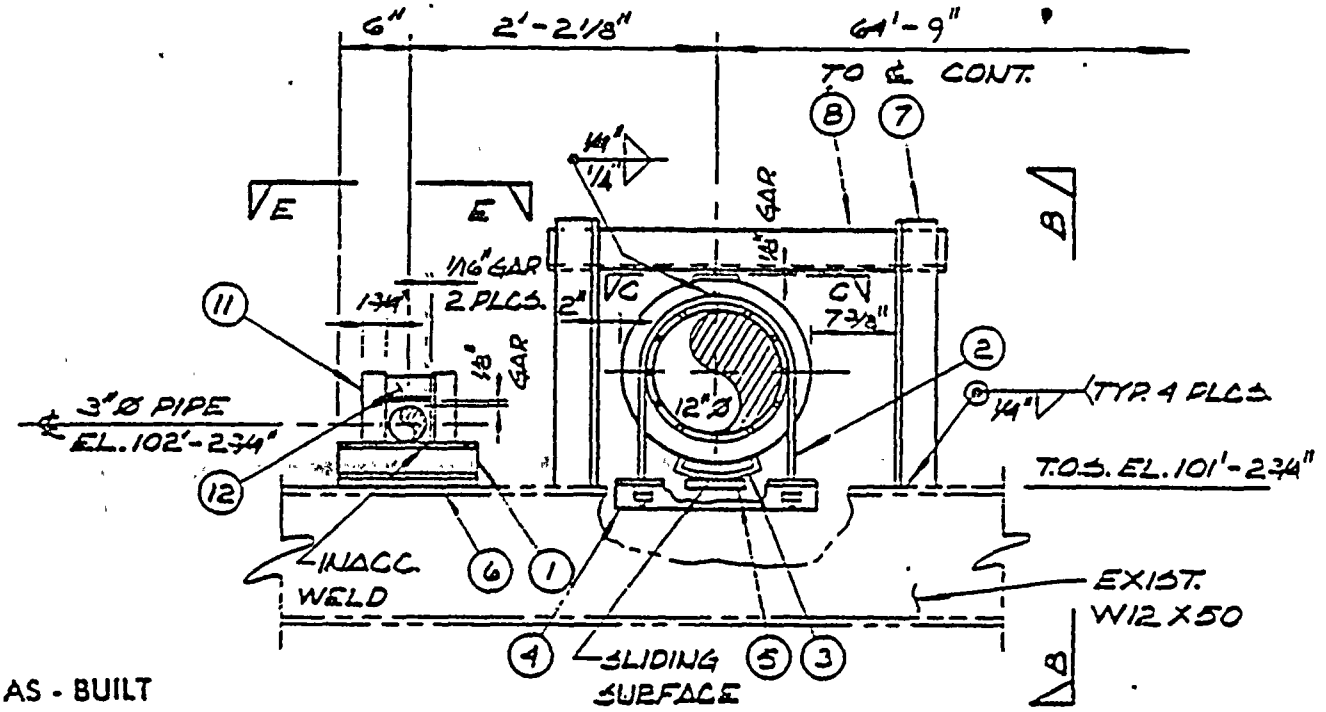

VIEW A-A

AS - BUILT
FOR DESIGN REVIEW
RECEIVED OCT 22 1981

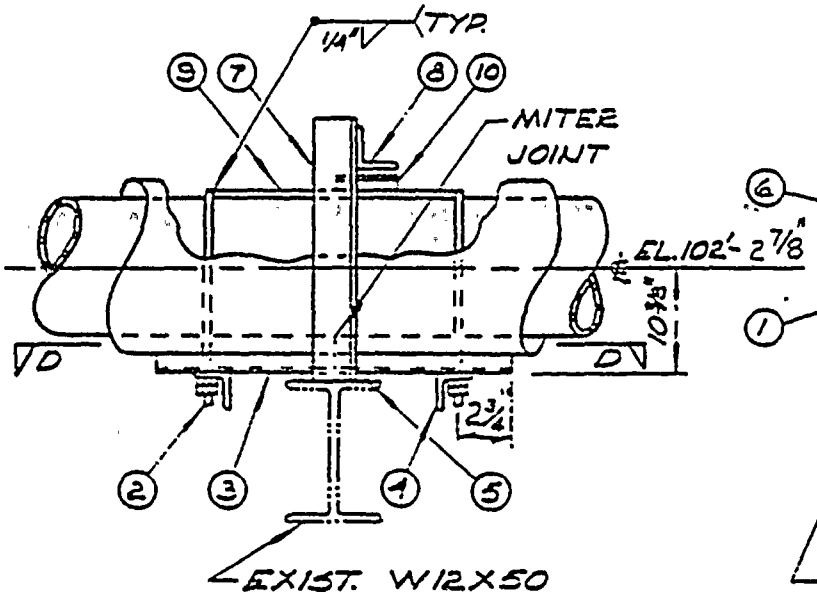

VIEW B-B

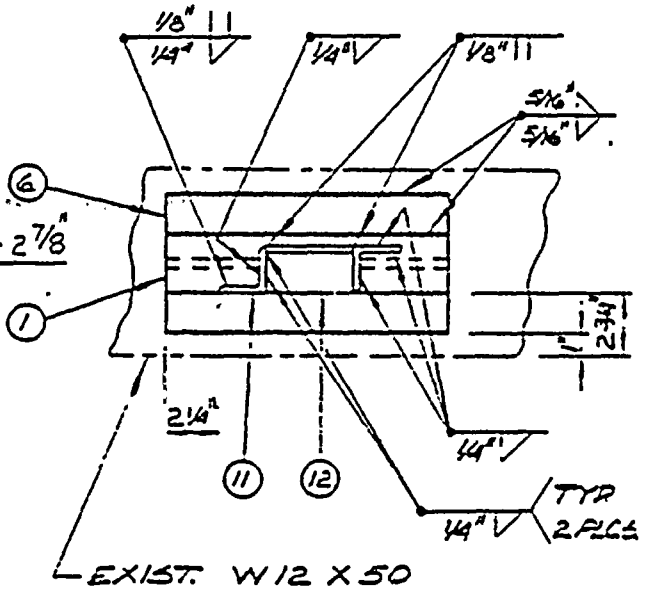

DETAIL PLAN VIEW E-E

3" LINE OMITTED FOR CLARITY

	DSGN	DRAWING NO	
	DWN FM 8-22-81	049252	
	CHKD 9-1-81		
PROJECT: DIABLO CANYON	UNIT: ONE	SHT 11A OF SHTS	P G & E CO

ISSUE

MICROFILM

AREA 1F	LINE 1-K-3243-3-E	HANGER SYMBOL 40 / 48R
EL 100'-0"	1-51-985-12 III P B	LOC ON DWG 500040

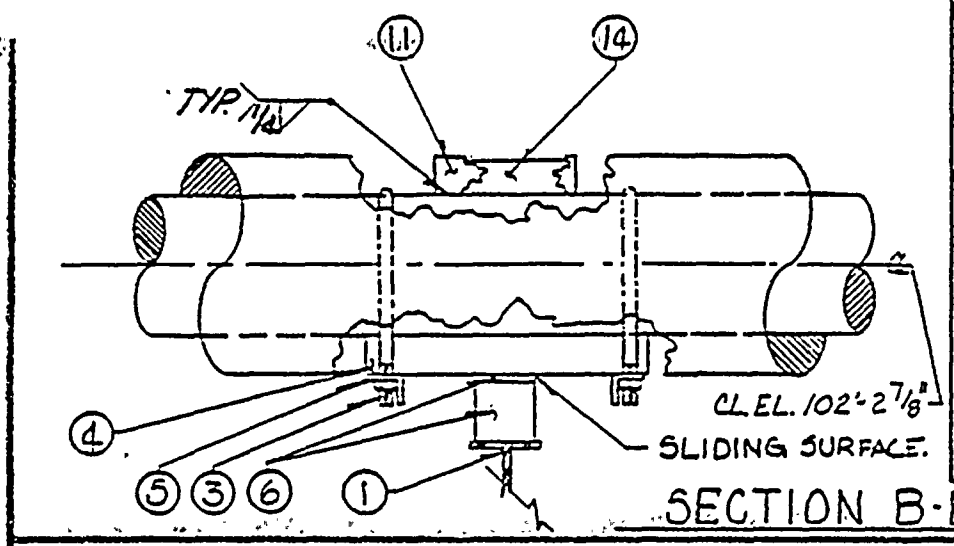

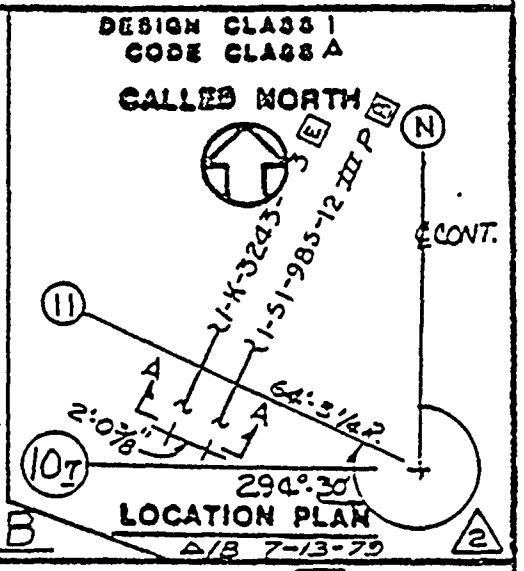

NO OF ASSEMBLIES REQUIRED 1

NO	REQD	MATERIALS PER ASSEMBLY
1	3	W8×17 (2) 5'-6" LONG EACH. (1) 3'-11 1/4" LONG.
2	1	W4×13-1'-0" LONG.
3	2	7/8"×12", FIG. 137. U BOLT. D=14"
4	1	12"Ø PIPE FIG. 164, SADDLE 2'-0" LONG. C=9 5/8"
5	2	H.S. 50, L 2 1/2"×2 1/2"×3/8", TW=7# CC.=13 3/4", E=1'-5", G=1 3/8" H=15/16".
6	2	(1) PL. 1/2"×5"-0'-5" LONG. (1.) 3 1/4"×5"-0'-5" LONG.
7	—	AS - BUILT
8	—	FOR DESIGN REVIEW
9	2	L 2"×2"×3/8"- (1) 1'-1/2" LG. (1) 0'-3 5/8" LG. RECEIVED OCT 23 1981
10	1	S.T. 4×11.5-3'-10 1/4" ± LG.
11	1	12"Ø PIPE FIG. 164, SADDLE 1'-0" LG. C=9 5/8".
12	2	PL. 3/8"×3"×0'-3 1/4" LG.
13	2	5/8" Ø BOLT ASTM A307 W/LOCKWASHERS.
14	2	CS BAR 3"×1/4"×1'-0" LG.
15	1	BAR 3 5/8"×3/8"-0'-4" LG.
16	2	TS 3×3×1/4"-16A=6'-5" LG., 16B=5'-4" LG. } NEW
17	1	TS 4×4×1/4"-7'-0" FIELD TO CUT TO SUIT }
18	1.	STIFF. PL. 3/8"×2 7/16"×7 5/16" CUT CORNERS 1/2") SEE DTL. 5
19	2	5"×1/2"×0'-5 1/2" LG. BAR @ END OF ITEM 16 COPE

REV. 2: SYSTEM INTERACTION MODIFICATION ADD ITEM 15 TO 18

DSGN	DRAWING NO
DWN S.F.C. 8/4/80	049252
CHKD (AR 4.10.2.3)	

PROJECT:	UNIT: #1	SHT 12 OF	SHTS	P G & E CO	ISSUE	REV
					MICROFILM	2

76-1117 Rev 3-76

AREA 1F	LINE 1-K-3243-3-E	HANGER SYMBOL 40 / 48R
EL 100'-0"	1-S1-985-12 III P-B	LOC ON DWG 500C 40

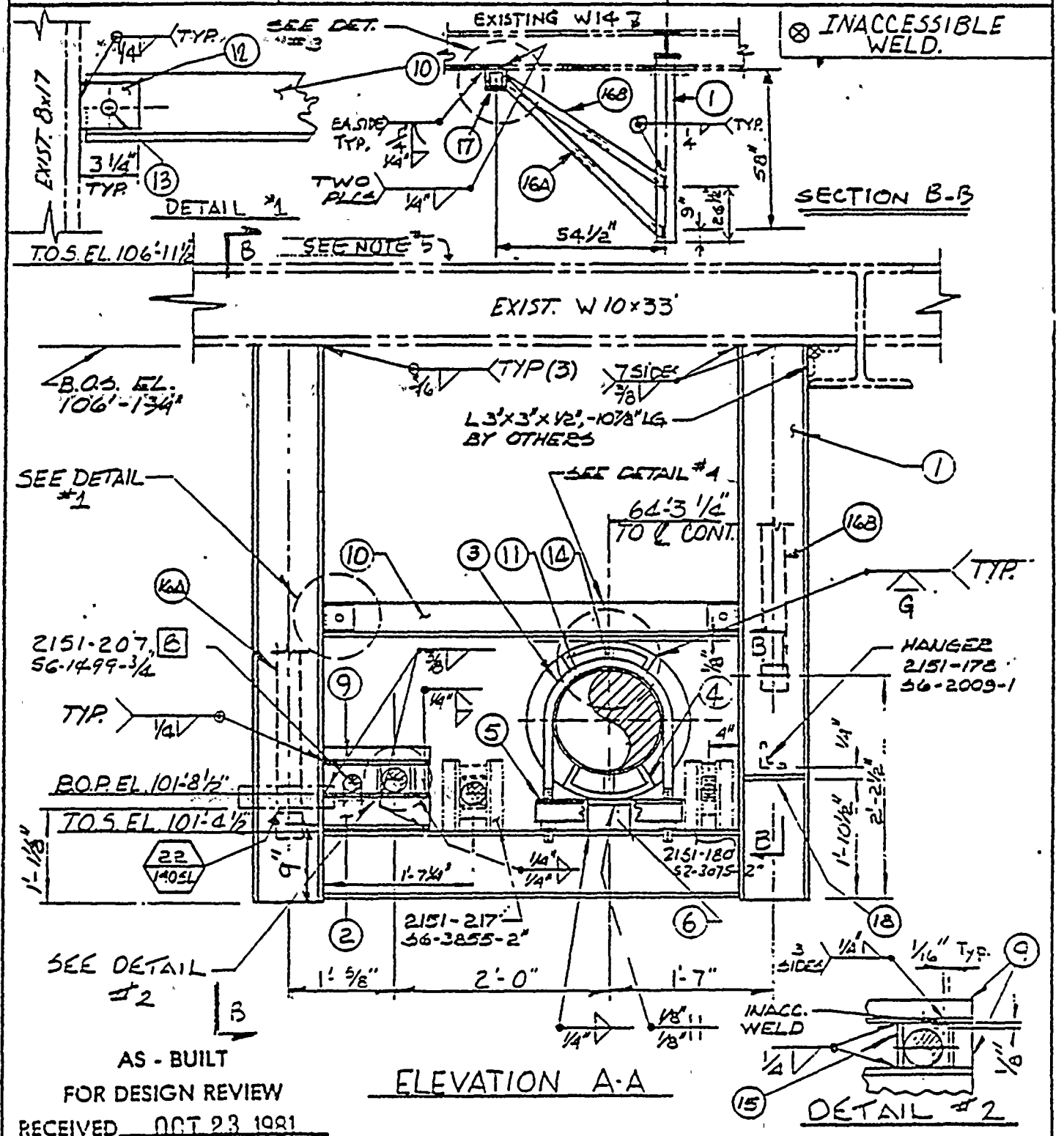

AS BUILT 7-13-79		DSGN	DRAWING NO 049252	
		DWN SAM CRAIG 4/6/6		
		CHKD CAB 1-12-80		
PROJECT:	UNIT: #1	SHT 12A OF SHTS	P G & E CO	ISSUE REV 2

MICROFILM 2

76-1117 Rev 3-76

AREA 1 F	LINE 1 K-3243-3- E	HANGER SYMBOL 40 / 46R
EL 100'-0"	1-51-985-12-III P B	LOC ON DWG 500040

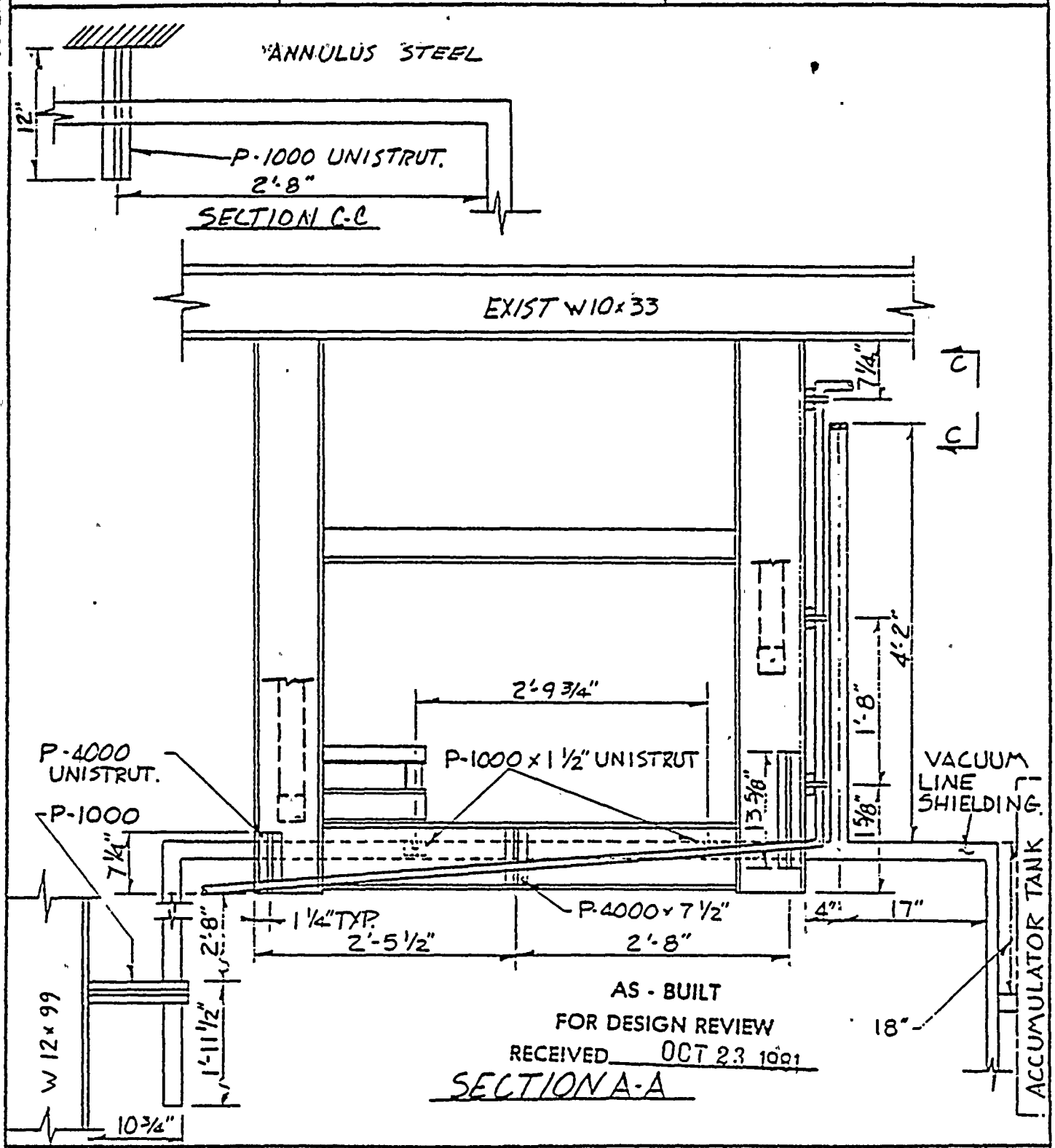

INDEXED REV. 2

AS BUILT 7-13-79	DSGN	DRAWING NO		
	DWN SFC 4/4/80	049252		
	CHKD CAB 4-10-80			
PROJECT: DIABLO CANYON	UNIT: #1	SHT 12 B OF SHTS	P G & E CO	ISSUE 2 REV

MICROFILM 2

AREA 1-F	LINE 1-K-3243-3-E NOS. 1-S-63855-2-A 1-S1-985-12 III P-E	HANGER SYMBOL 40/48R
EL. 100'-0"		LOC. ON DWG. 500040

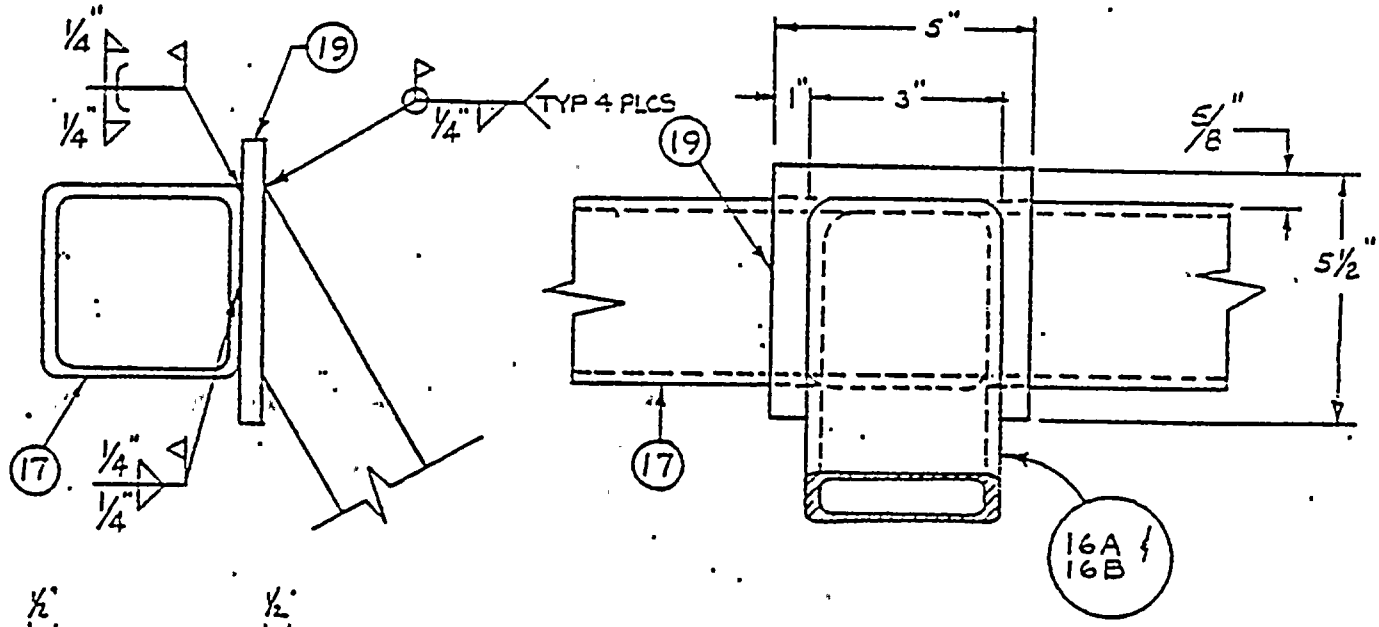

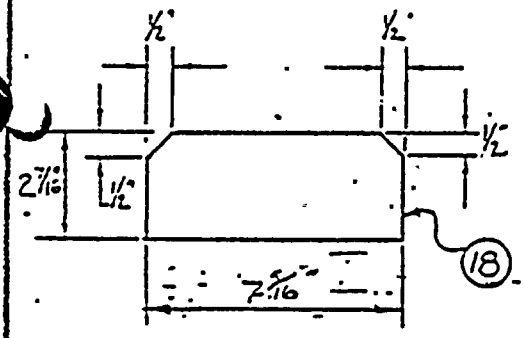

DETAIL #3 TYP. 16A & 16B

AS-BUILT DRAWING
REVIEWED & ACCEPTED BY
COMPARISON JH BY 8-3-89 DATE
OR
CALCULATION BY DATE
CHECKED 8-4-89 DATE

DETAIL 5

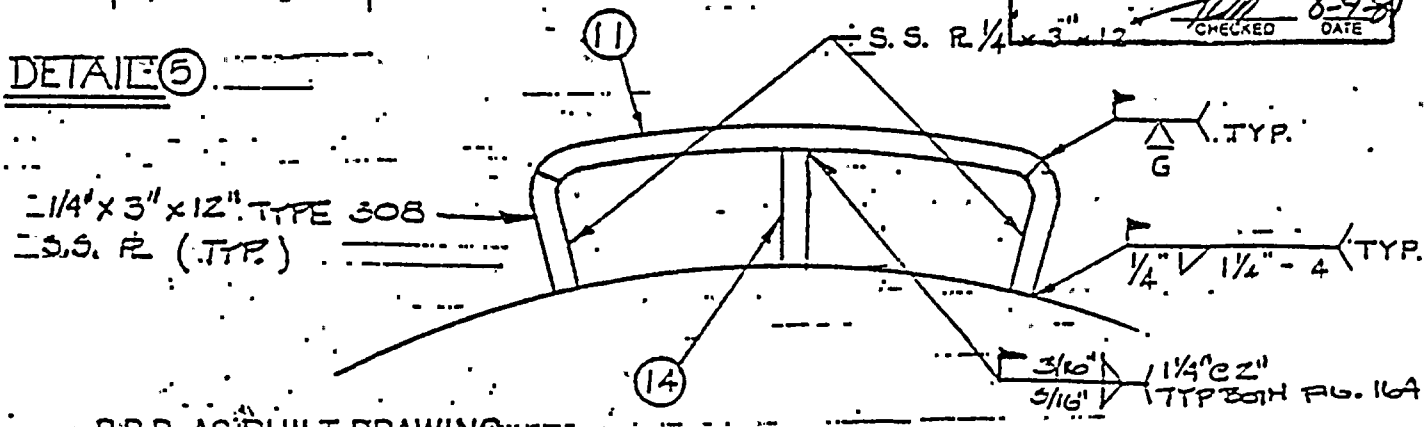

P.P.P. AS BUILT DRAWING

DATE	P.P.P. VERIFIED

DETAIL #4
MODIFICATION OF FIG. 164

	P G & E CO.	DRAWING NO.	CHANGE
CHK: LD	SHEET 12C SHEETS	049252	2

76-1116 Rev 3-76

AREA 1F	LINE 1-K-3243-3 E 1-S1-985-12 III P B	HANGER SYMBOL Y RESTRAINT	40 / 50R
EL 100'-0"		LOC ON DWG 500040	

DESIGN CLASS I
CODE CLASS A

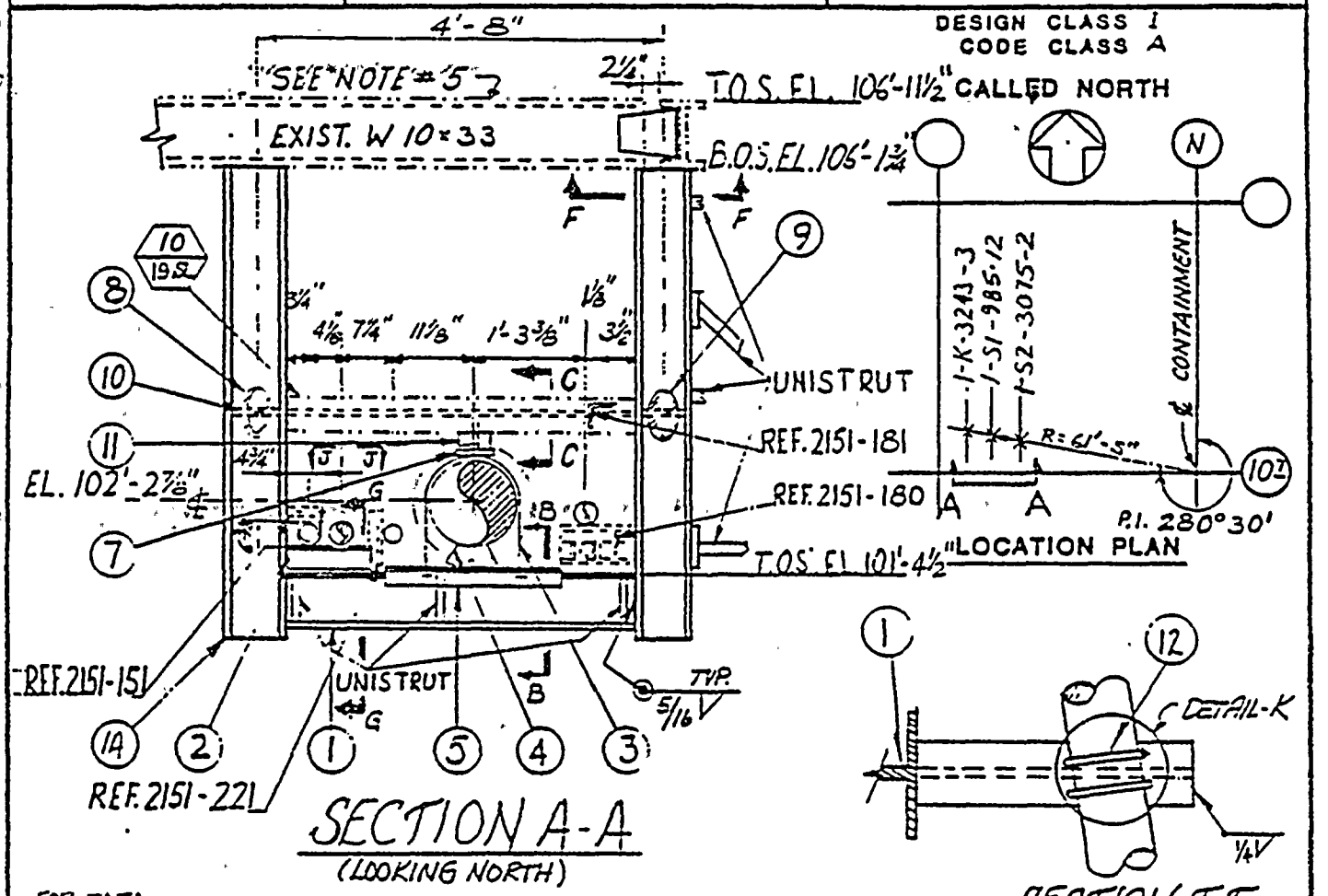

SECTION A-A
(LOOKING NORTH)

FOR DATA SEE FILE 33 SHTS 13-13E

FOR ADDITIONAL INFO. SEE SHT. 13 B & 13 C

NO OF ASSEMBLIES REQUIRED 1

NO	REQD	MATERIALS PER ASSEMBLY
1	3	(1A) W8X17 5'-7" LG. (1B) W8X20 5'-7" LG. (1C) W8X20 4'-0" LG.
2	1	W4X13 1'-0" LG.
3	2	7/8" × 12" FIG. 137 U-BOLT, D = 14"
4	1	12" ϕ PIPE, FIG. 164, SADDLE, 2'-0" LG., C = 9 5/8"
5	2	H.S. 50 L 2½" × 2½ × 3/8, TW = 7±, C-C = 13¾, E = 1'-5" G = 1⅜", H = 15½"
6	1	BAR 5" × ¾" - 0'-5" LG.
7	1	BAR 5" × 5/16" - 0'-5" LG.

AS BUILT DATED 7-13-79

AS - BUILT
FOR DESIGN REVIEW
RECEIVED OCT 23 1981

REV. 2 : SYSTEM INTERACTION MODIFICATION ADD ITEM # 12	DSGN DWN D.C. 3-31-80 CHKD CAP 4-16-80	DRAWING NO 049252	
PROJECT:	UNIT: 1	SHT 13 OF SHTS	P G & E CO

ISSUE REV

MICROFILM 2

PN 1-3070 REV 2

13 Rev 2-76.

AREA 1F	LINE 1-K-3243-3-E 1-SI-985-12 III P-B	HANGER SYMBOL Y REST (40 / 50R)
EL 100'-0"		LOC. ON DWG 500040

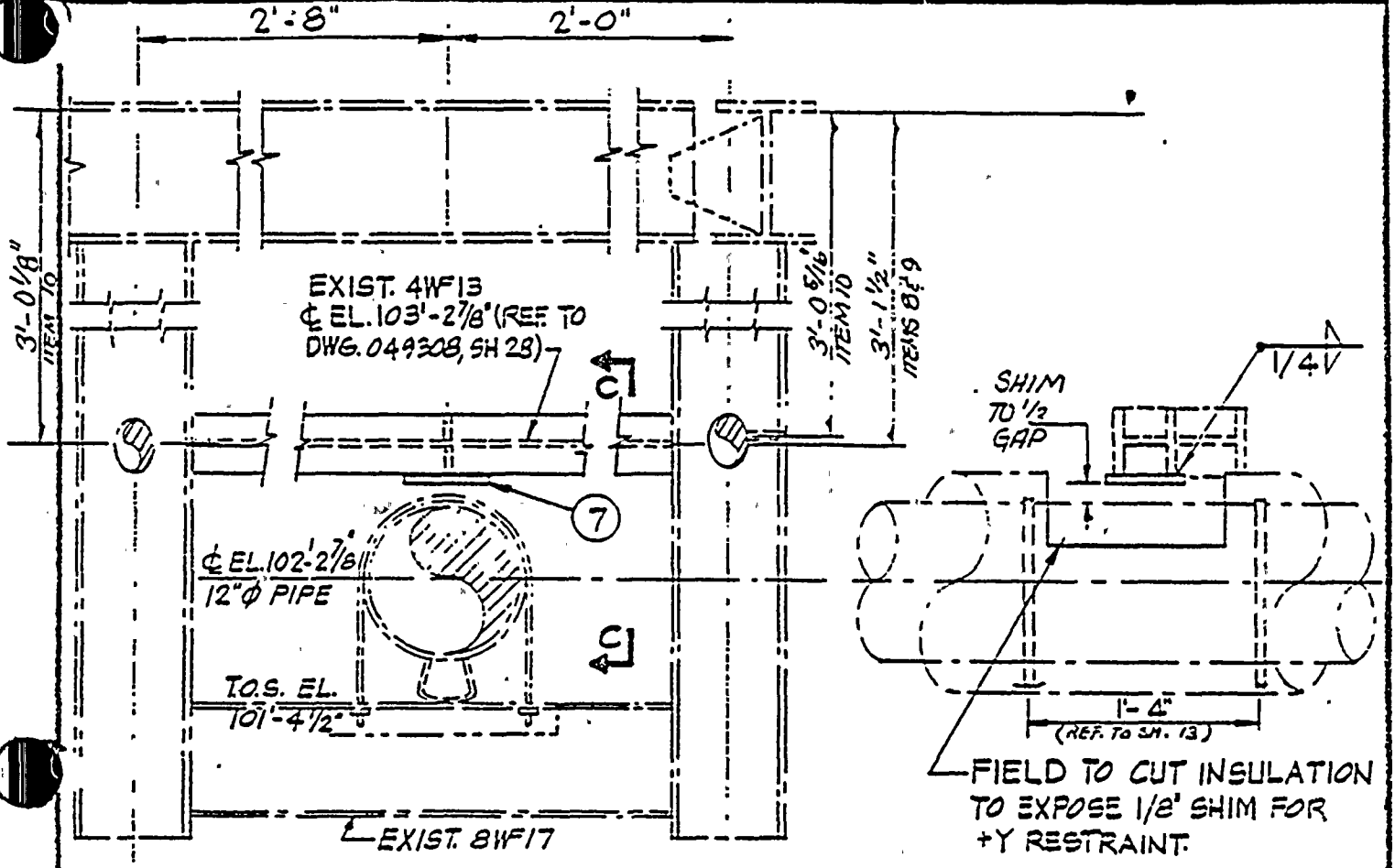

SEC. A-A
(REF. TO SH. 13)

C-C

NO OF ASSEMBLIES REQUIRED 1 (WORK THIS SH. WITH SH. 13 B)

NO	REQD	MATERIALS
8	1	3" Ø SCH. 40 PIPE - 5'-1 1/2" LG.
9	1	3" Ø SCH. 40 PIPE - 5'-1" LG.
10	2	STIFFENER 2 1/2" x 3/8" x 7 1/8" LG.
11	1	W4 X 13. SEE SEC. B-B 4 9/16" LG.
12	2	1/2" x 3" U-BOLT FIG. 137
13	2	BAR 2 1/2" x 3/8". 0'-2 1/2" LG.

AS - BUILT

FOR DESIGN REVIEW
RECEIVED OCT 23 1981

SHEET 13A OF ___ SHEETS	DRAWING NO	REV
PG&E CO.	049252	2
	MICROFILM	

DWN: GUS L. DSGN: J H CHKD: N W

AREA 1F	LINE 1-K-3243-3-E	Y REST HANGER SYMBOL 40/50R
EL. 100'-0"	NOS. 1-S1-985-12 III P-B	LOC. ON DWG. 500040

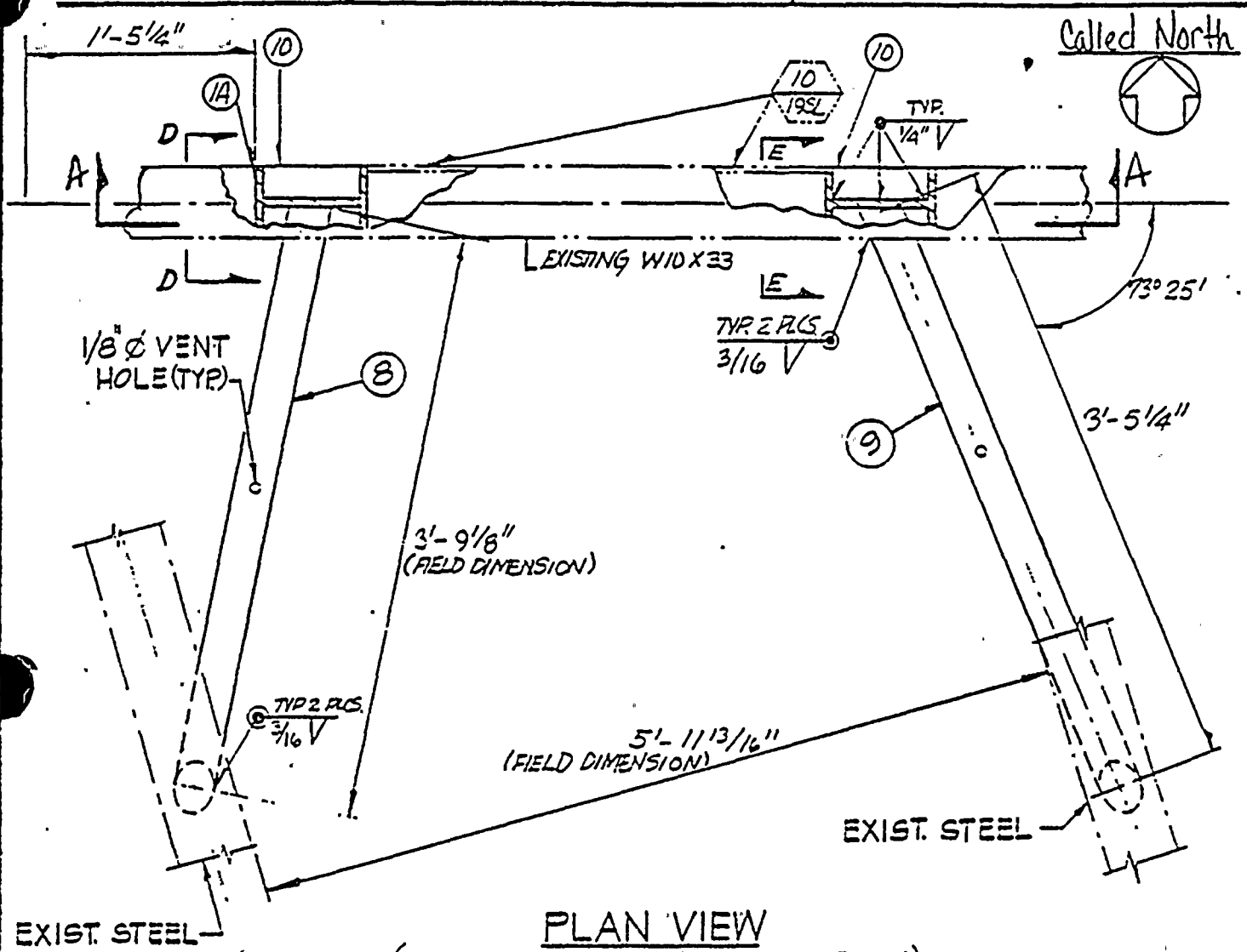

PLAN VIEW
(REF TO SH. 13, LOCATION PLAN)

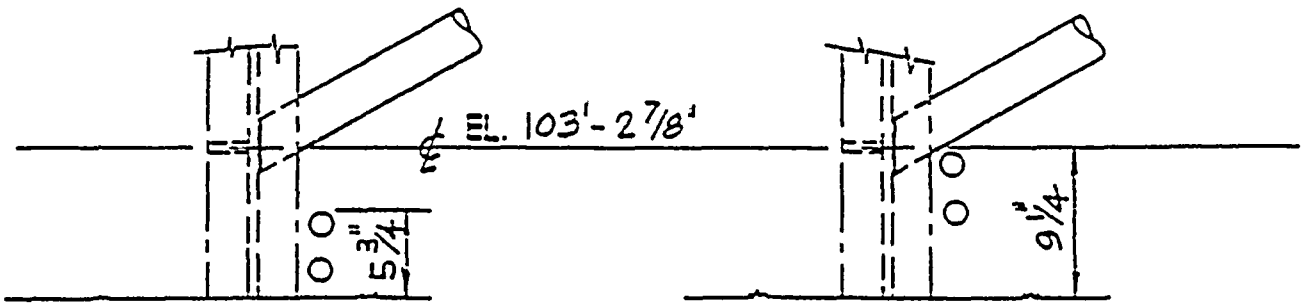

D-D E-E

AS - BUILT
FOR DESIGN REVIEW
RECEIVED OCT 23 1991

P O & E CO.	DRAWING NO.	CHANGE
SHEET 138 OF SHEETS	049252	2

J.H. / FIELD

AREA 1F	LINE 1-K-3243-3 E 1-SI-985-12 III P B	HANGER SYMBOL Y RESTRAINT	40 / 50R
EL 100'-0"		LOC ON DWG 500040	

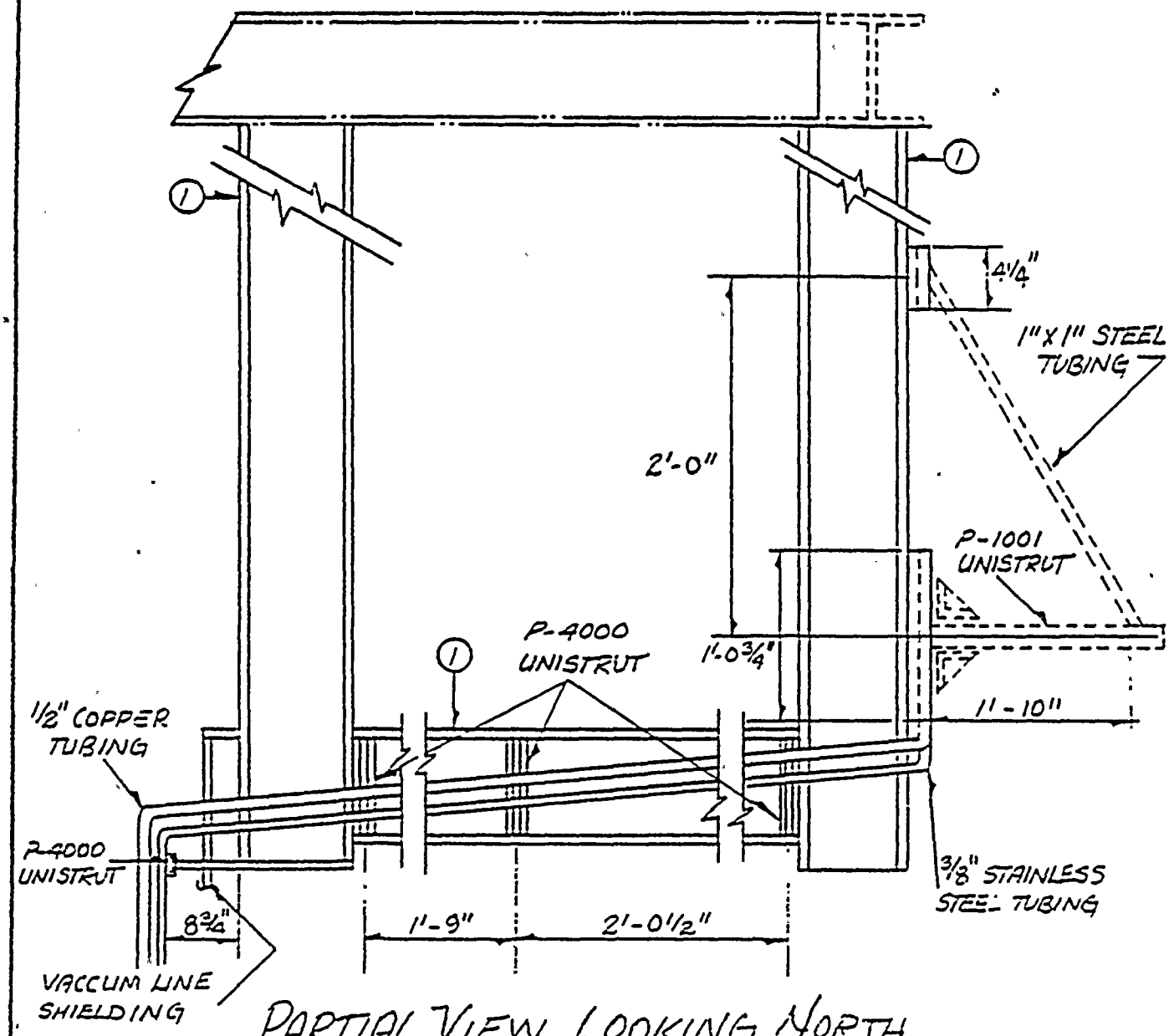

PARTIAL VIEW LOOKING NORTH
UNISTRUT DETAIL

AS - BUILT
FOR DESIGN REVIEW
RECEIVED OCT 23 1981

		DSGN DWN 10 21-81 CHKD LANDICE 10-22-81	DRAWING NO 049252		
PROJECT: DIABLO CYN.	UNIT: ONE	SHT 313 OF SHTS	P G & E CO	ISSUE	REV 8
				MICROFILM	

7. 1117 Rev 3-76

76-1117 Rev 3-76

AREA 1 F	1-K-3243-3 E LINE ES1-985-12III P B	HANGER SYMBOL Y-RESTRAINT (40 / 50R)
EL 100'-0"		LOC ON DWG 500040

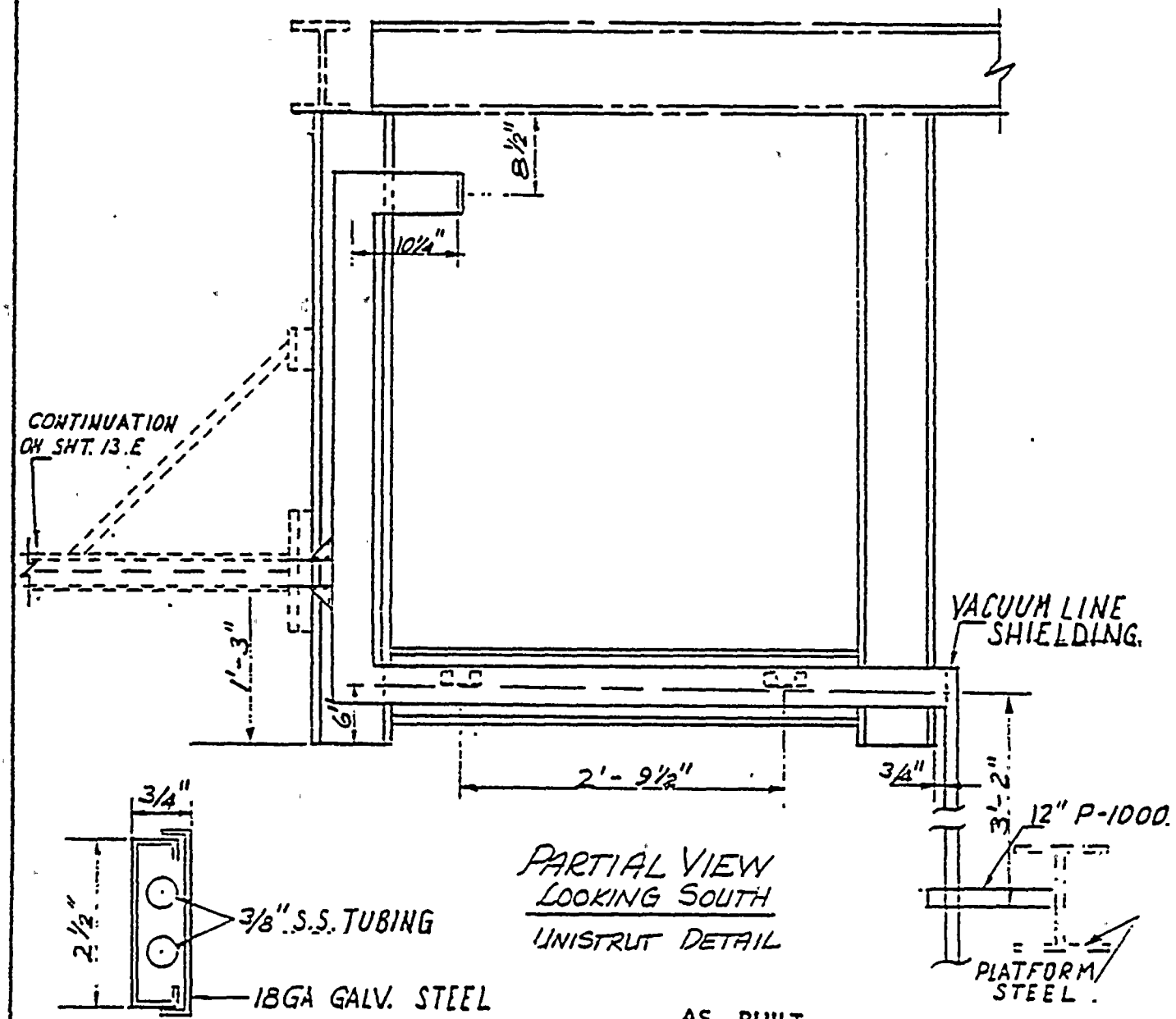

PARTIAL VIEW
LOOKING SOUTH
UNISTRUT DETAIL

AS - BUILT
FOR DESIGN REVIEW
RECEIVED OCT 23 1981

SHTS 13-13E

AS BUILT DATED 7·13·79		DSGN DWN D.C. 4·1·80 CHKD CAE 4.16.80	DRAWING NO 049252		
PROJECT:	UNIT: 1	SHT 13C OF SHTS	P G & E CO	ISSUE	REV 2
				MICROFILM	2

AREA 1F	LINE 1-K-3243-3	HANGER SYMBOL 40 / 5DR
EL 100'-0"	1-S1-985-12 III P B	LOC ON DWG 500040

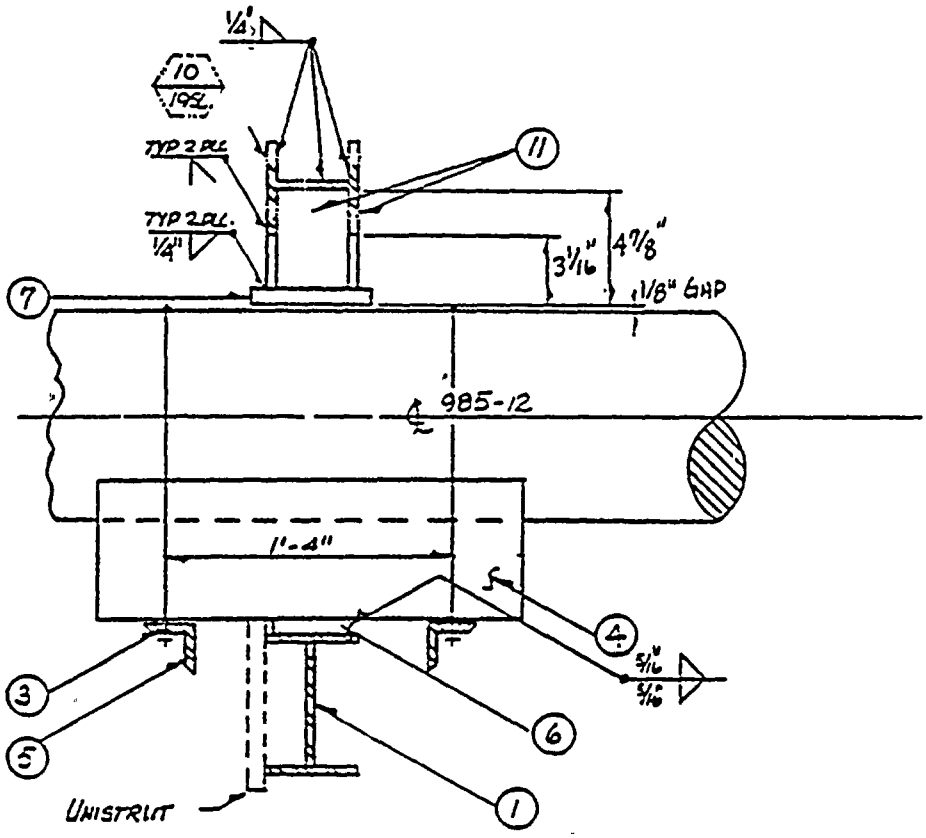

SECTION B-B

AS - BUILT
FOR DESIGN REVIEW
RECEIVED OCT 23 1981

		DSGN	DRAWING NO 049252		
		DWN			
		CHKD LANDKE 10-22-81			
PROJECT: DIABLO	UNIT: ONE	SHT 50 OF SHTS	P G & E CO	ISSUE	REV
				MICROFILM	

7 .17 Rev 3-76

D

I117 Rev 3-76

AREA 1F	LINE 1-K-3243-3 [E] / 1-S1-985-12 III P-[B]	HANGER SYMBOL Y RESTRAINT (40 / 50R)
EL 700'-0"		LOC ON DWG 500040

AS - BUILT
FOR DESIGN REVIEW
RECEIVED OCT 23 1981

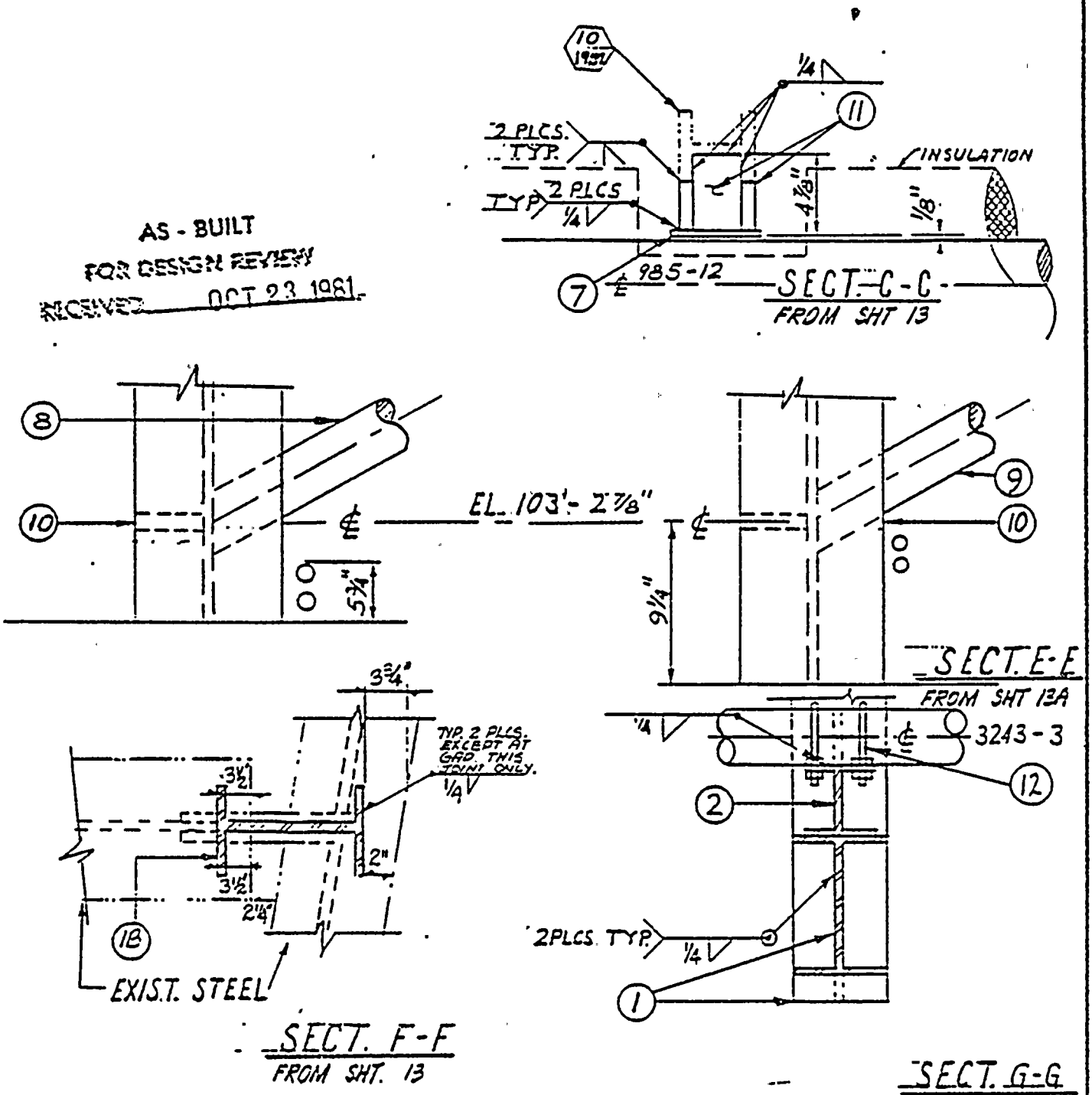

SHTS 13-13E

AS BUILT DATED 7-13-79		DSGN	DRAWING NO		
		DWN D.C. 4-1-80	049252		
		CHKD AB 4.16.80			
PROJECT:	UNIT: 1	SHT 13D OF SHTS	P G & E CO	ISSUE	REV
				MICROFILM	2

RM INDEXED REV 2

AREA 1 F	LINE 1-K-3243-3 E	HANGER SYMBOL Y RESTRAINT 40 / 50R
EL 100'-0"	1-SI-985-12III P B	LOC ON DWG 500040

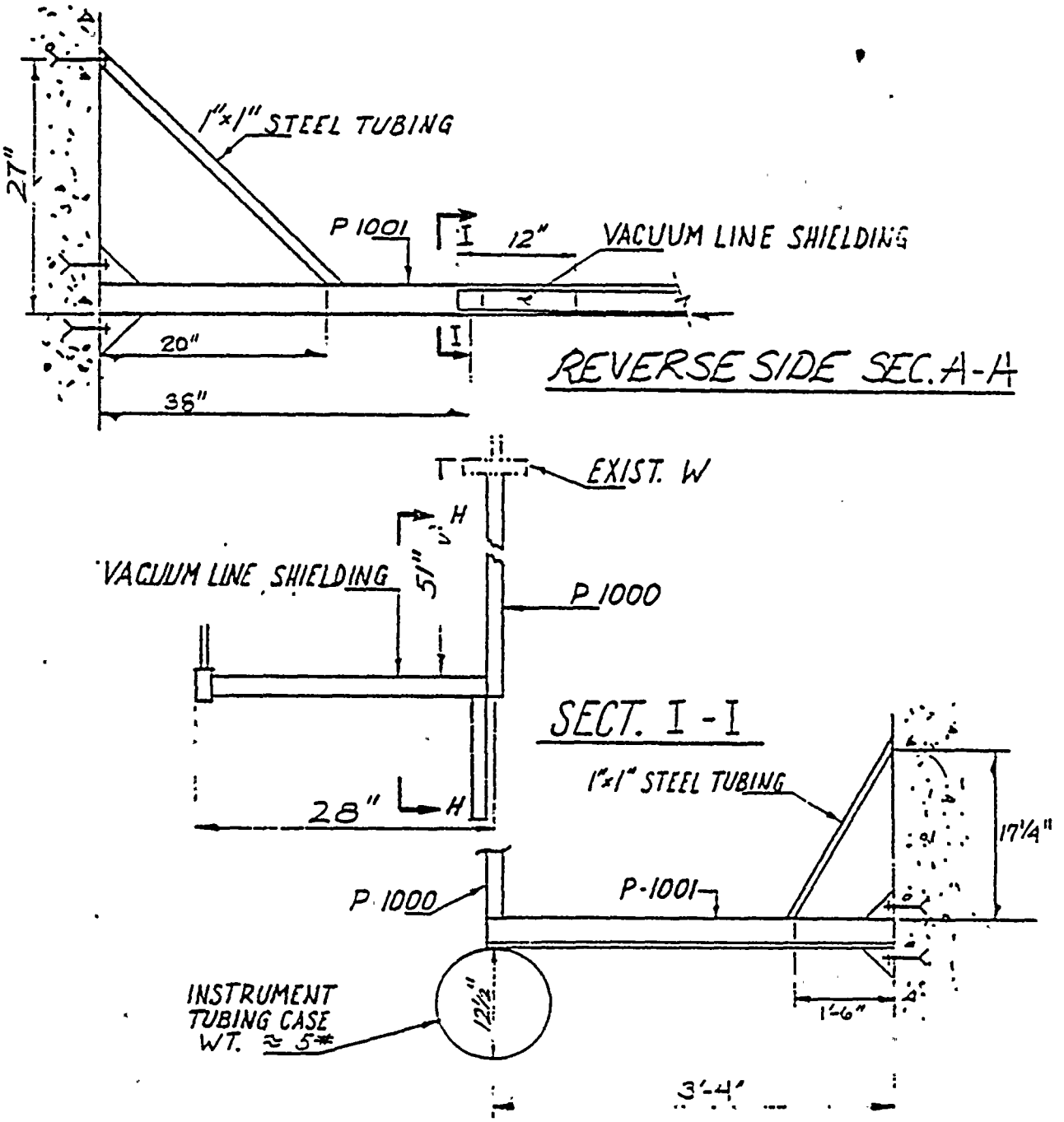

VIEW H-H

AS - BUILT
FOR DESIGN REVIEW
RECEIVED OCT 23 1981

AS BUILT DATED 7-13-79	DSGN	DRAWING NO	
	DWN D.C. 4-10-80	049252	
	CHKD CAT 4-16-80		
PROJECT:	UNIT: 1	SHT 3E OF SHTS	P G & E CO

ISSUE REV 2

MICROFILM 2

7 1117 Rev 3-76

AREA 1F	LINE 1-K-3243-3-E	HANGER SYMBOL 40 / 5DR
EL 100'-0"	1-S1-985-12 III P B	LOC ON DWG 500040

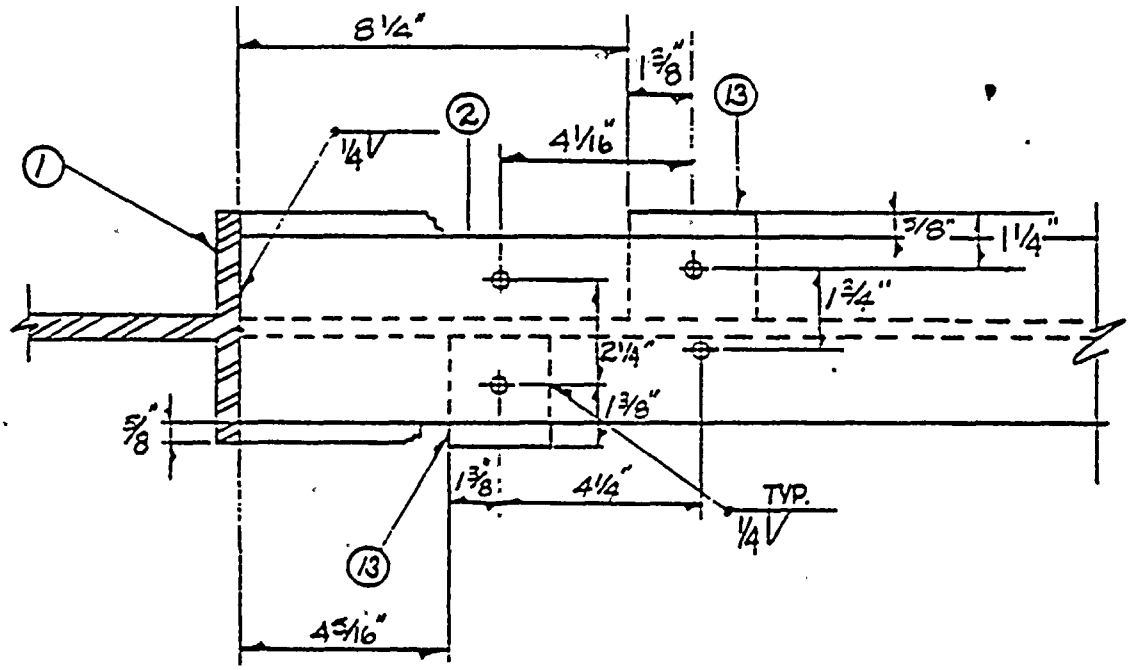

DETAIL "K"

AS - BUILT
FOR DESIGN REVIEW
RECEIVED OCT 23 1981

		DSGN	DRAWING NO	
		DWN M. SENELL 10-22	049252	
		CHKD L. MOYLE 10-22-81		
PROJECT: DIABLO	UNIT: ONE	SHT 13F OF SHTS	P G & E CO	ISSUE / REV 2
				MICROFILM

7 217 Rev 3-76

76-813

Cont

AREA 1G	LINE 1-SI-985-12 III P B	HANGER SYMBOL 56N 28R
EL. 100'-0"	NOS.	LOC. ON DWG. 500056

DESIGN CLASS I
CODE CLASS B

"Y" RESTRAINT

AS - BUILT
FOR DESIGN REVIEW
RECEIVED OCT 23 1981

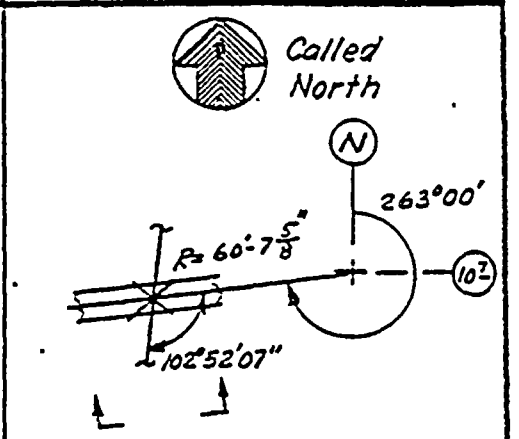

LOCATION PLAN

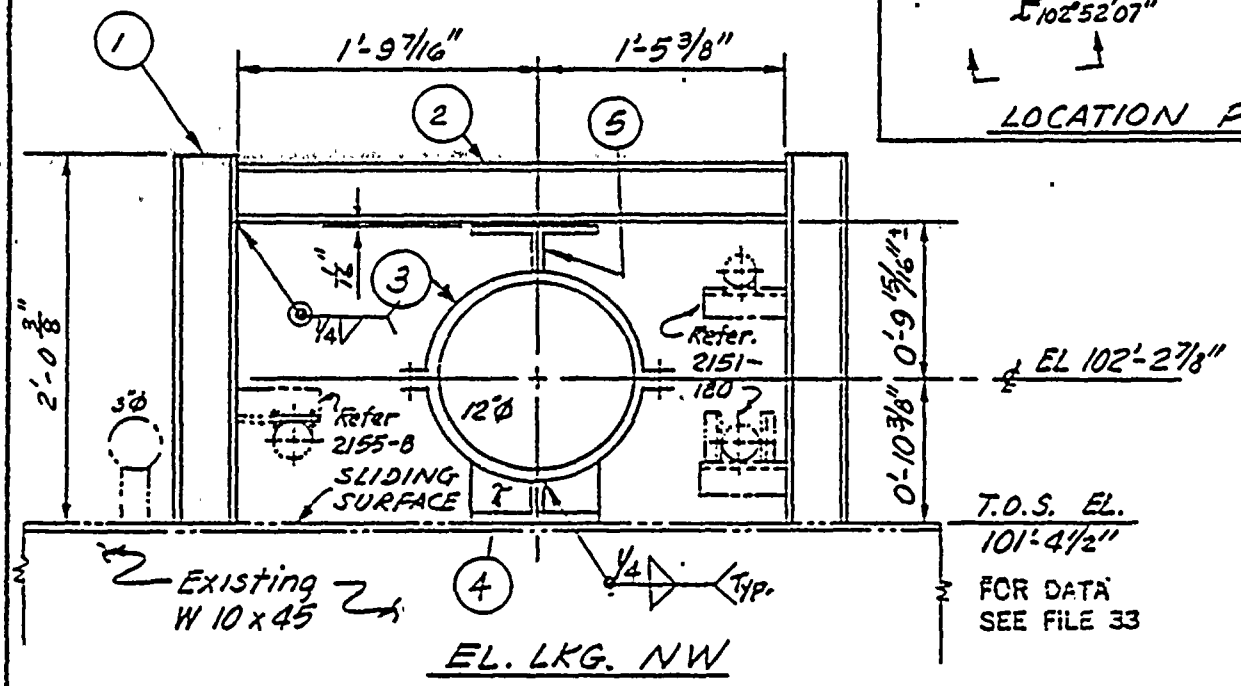

FOR DATA SEE FILE 33

EL. LKG. NW

NO. OF ASSEMBLIES REQUIRED 1

NO.	REQD	MATERIALS
1	2	W 4 x 13 - 2'-0 3/8" LG. EA.
2	1	W 4 x 13 - 3'-2 13/16" LG.
3	1	12"Ø PIPE, 1 1/2" INSL. FIG. 256, MODIFIED SPIDER CLAMP ONLY AS SHOWN
		ABOVE. I = 6".
4	4	STIFFNER BAR 3 3/4 x 3/8 - 0'-6" LG. EA. (Cut to suit)
5	2	WT 4 x 20 - 0'-6" LG. EA. (Cut to suit)

AS BUILT 6-7-76
DIABLO CANYON UNIT NO. 1

P G & E CO.
SHEET 68 OF SHEETS

DRAWING NO. 049261

REV. 1

DWN V.A. Grassman 4-2-80
CHKD: CAE 4-4-80

FM INDEXED REV. 1

76-813

AREA 1G	LINE 1-S1-985-12 III P B	HANGER SYMBOL 56N 78R
EL. 100'-0"	NOS.	LOC. ON DWG. 500056

DESIGN CLASS I
CODE CLASS B

"Y" RESTRAINT

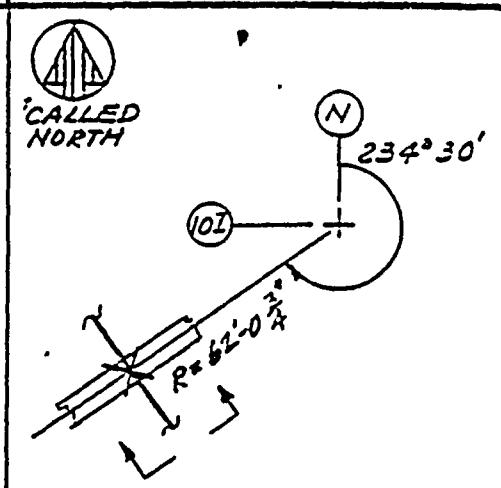

LOCATION PLAN

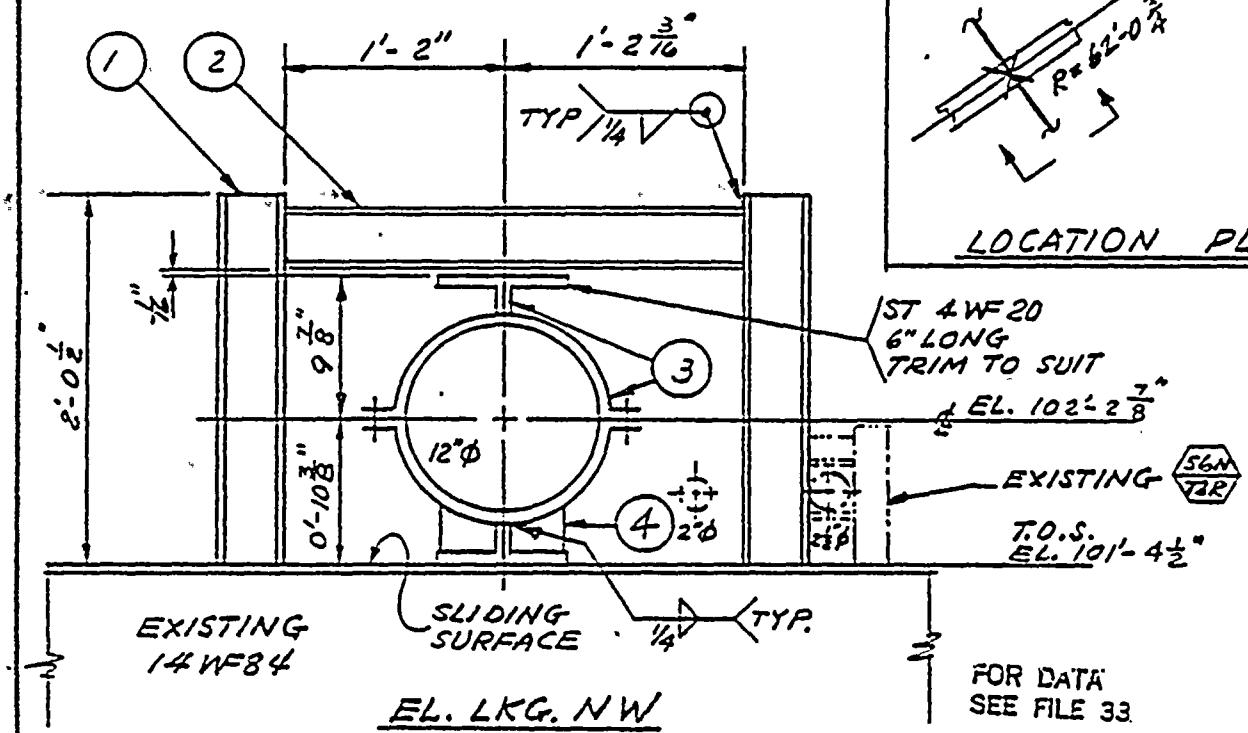

EL. LKG. NW

FOR DATA SEE FILE 33

NO. OF ASSEMBLIES REQUIRED 1

NO.	REQD	MATERIALS	AS - BUILT.
1	2	4WF13, 2'-0 1/2" LG. EA.	FOR DESIGN REVIEW
2	1	4WF13, 2'-4 3/16" LG.	RECEIVED OCT 29 1981
3	1	12"Ø PIPE, 1 1/2" INSL. FIG. 256 MODIFIED SPIDER	
		CLAMP ONLY AS SHOWN ABOVE. I = 6".	
4	4	STIFF. PL 3 3/4 × 3/8, 6" LG. EA. CUT TO SUIT.	

REV. 1: CHANGED T.O.S. EL. ADDED NOTE "Y" RESTRAINT & ITEM 4.
APPROVED FOR CONSTRUCTION.

RM INDEXED REV. 1

	P G & E CO.	DRAWING NO.	REV.
	SHEET 69 OF SHEETS	049261	1

DSGN: P.K.

76-813

AREA 1G	LINE 1-SI-985-12 III P B	HANGER SYMBOL 56N 79R
EL. 100'-0"	NOS.	LOC. ON DWG. 500056

DESIGN CLASS I
CODE CLASS B

"Y" RESTRAINT

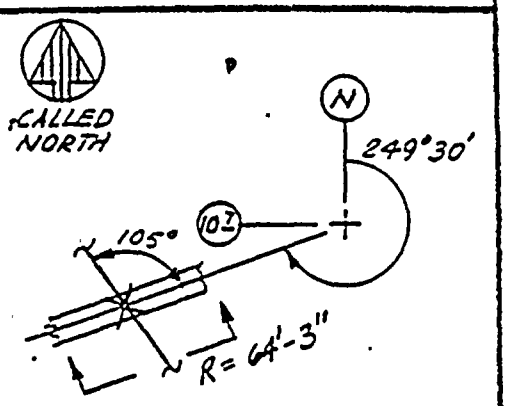

LOCATION PLAN

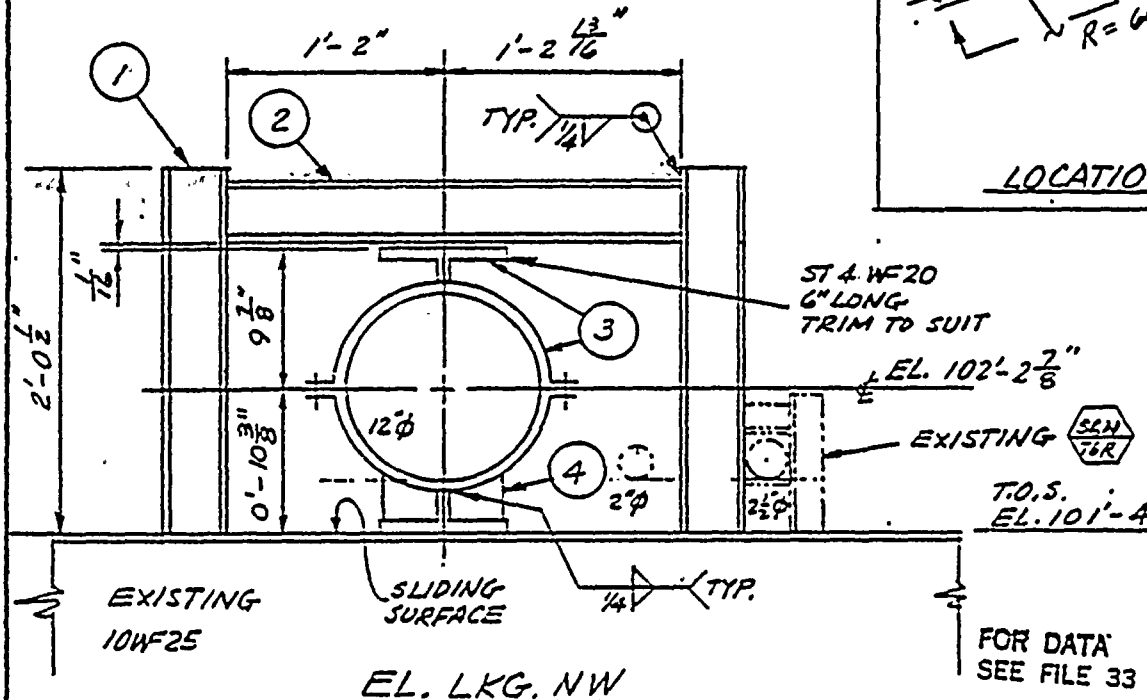

EL. LKG. NW

NO. OF ASSEMBLIES REQUIRED 1

NO.	REQD	MATERIALS
1	2	4 WF13, 2'-0 1/2" LG. EA.
2	1	4 WF13, 2'-4 13/16" LG.
3	1	12"ϕ PIPE, 1 1/2" INSL. FIG. 256 MODIFIED SPIDER CLAMP ONLY AS SHOWN
		ABOVE, I = 6".
4	4	STIFF. PL 3 3/4 × 3/8, 6" LG. EA. CUT TO SUIT.

AS - BUILT
~~FOR DESIGN REVIEW~~
~~RECEIVED~~ OCT 22 1991

REV. 1: CHANGED T.O.S. EL. ADDED NOTE "Y" RESTRAINT & ITEM 4.
APPROVED FOR CONSTRUCTION.

RM INDEXED REV. 1

P G & E CO.	DRAWING NO.	REV.
SHEET 70 OF SHEETS	049261	1

DRAWN: PK.

TILE CONT.

76-813

AREA 1G	LINE 1-51-985-12 III P 8	HANGER SYMBOL 57N / 10R
EL. 107'-6"	NOS.	LOC. ON DWG. 500057

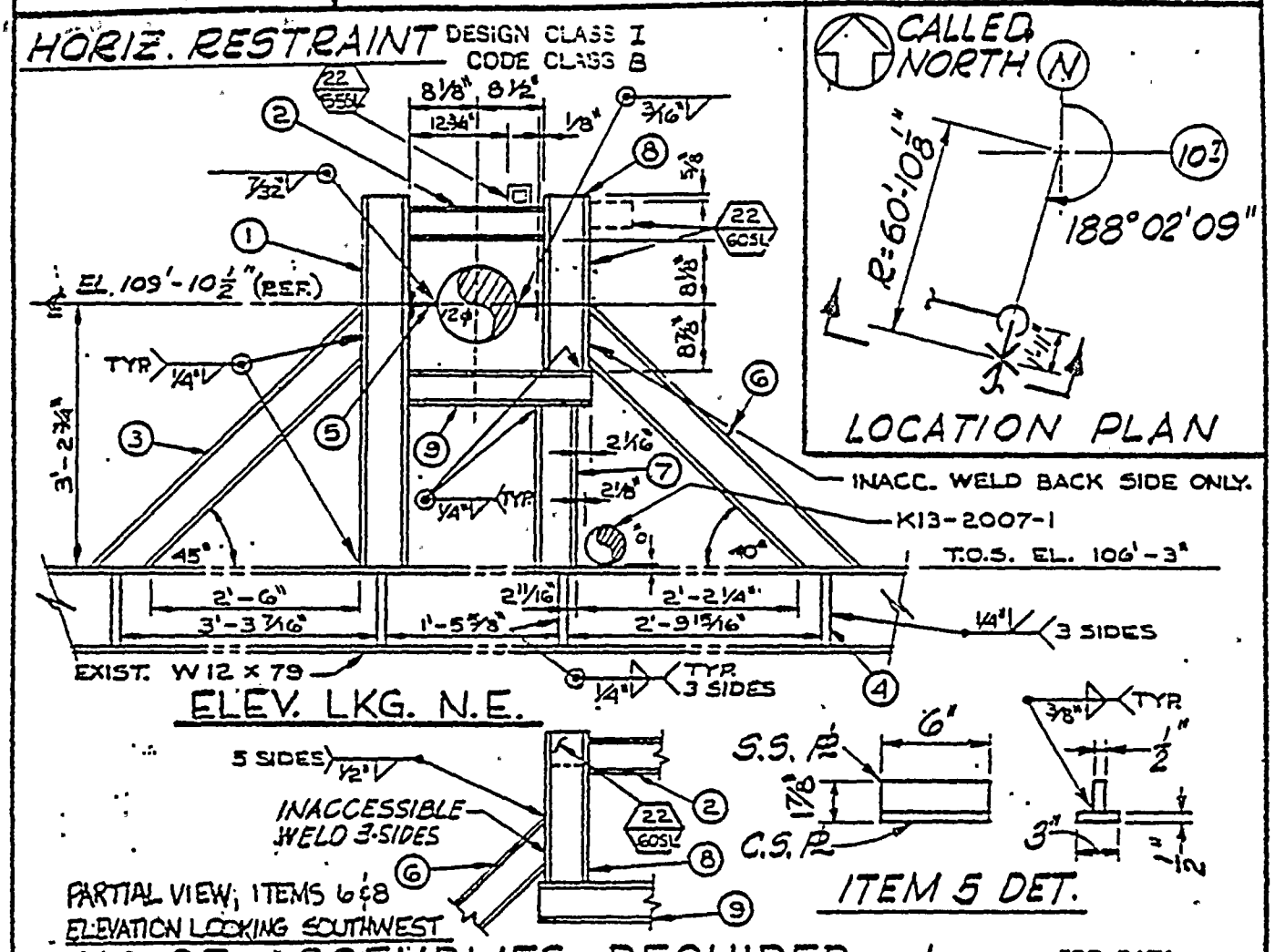

NO. OF ASSEMBLIES REQUIRED 1 A/B 3-24-81 ⚠ FOR DATA SEE FILE 33

NO.	REQD	MATERIALS
1	1	M6 x 20, 4'-3½" LG. EA.
2	1	M4 x 13, 1'-4⅝" LG. EA.
3	1	M6 x 20, 4'-6½" LG. EA. CUT TO SUIT.
4	8	PL 5¾" x ⅜" x 0'-10 15/16", CUT TO SUIT.
5	2	T-SHOES EA. MADE OF (1) C.S. PL 3" x ½" x 6".
		(1) S.S. PL 1½" x ½" x 6".
6	1	M4 x 13, 4'-0" LG. CUT TO SUIT.
7	1	M6 x 20, 2'-0" LG.
8	1	M6 x 20, 1'-9½" LG.
9	1	M6 x 20, 1'-10¾" LG.

AS-BUILT

FOR DESIGN REVIEW

RECEIVED OCT 22 1981

REV. 2: (NOT ISSUE YET) REVISED PER M. W. KELLOGG "AS BUILT" ECO M-853 (MVR M-1142, R-1)

P G & E CO. SHEET 1 OF 52 SHEETS DRAWING NO. 049263 REV. 1

DSGN: AC FHB 5/19/80 CAE 5/20/80 CHKD: CHG 2

76-813

AREA 1G	LINE 1-SI-985-12 III P B	HANGER SYMBOL 57N / 151R
EL. 107'-6"	NOS.	LOC. ON DWG. 500057

"Y" RESTRAINT

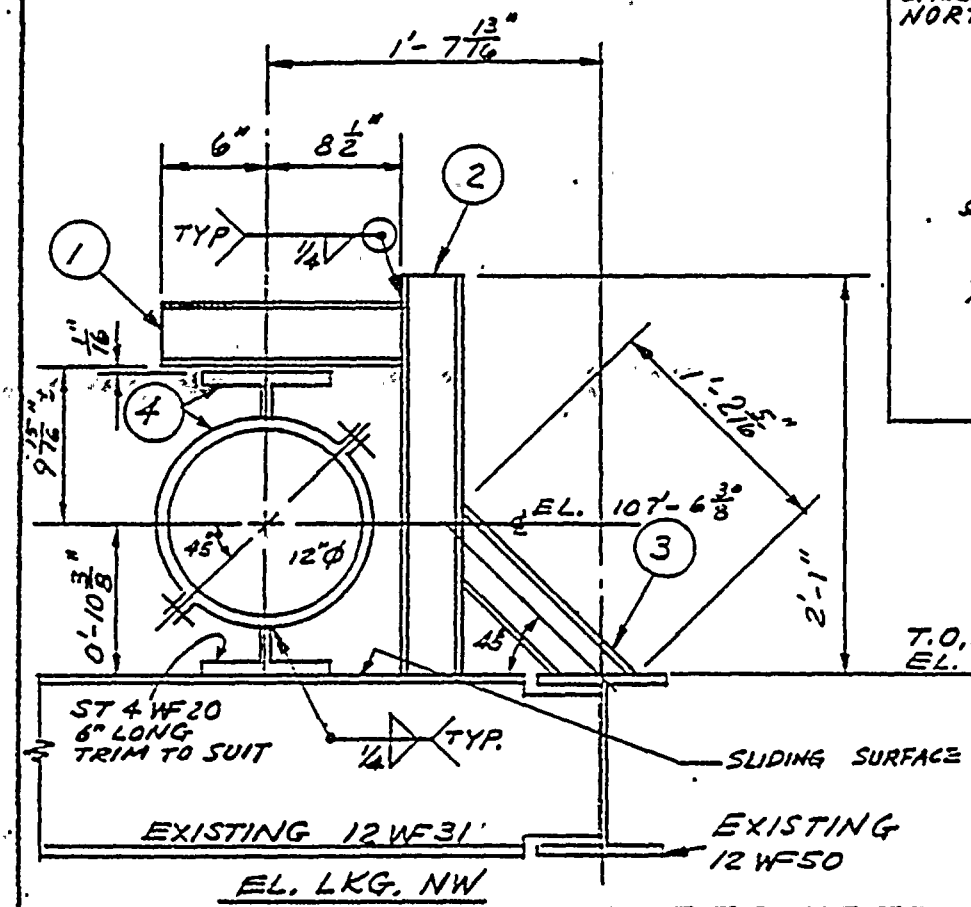

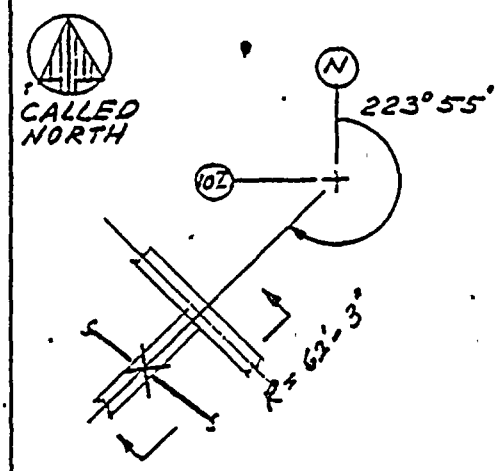

LOCATION PLAN

AS - BUILT
FOR DESIGN REVIEW
RECEIVED OCT 22 198

FOR DATA
SEE FILE 33

NO. OF ASSEMBLIES REQUIRED 1

NO.	REQD	MATERIALS
1	1	4 WF13, 1'-2 1/2" LG.
2	1	4 WF13, 2'-1" LG.
3	1	4 WF13, 1'-2 5/16" LG. TRIM TO SUIT
4	1	12"Ø PIPE, 1 1/2" INSL. FIG. 256 MODIFIED SPIDER CLAMP ONLY
		AS SHOWN ABOVE.

REV. 1: CHANGED T.O.S. EL. APPROVED FOR CONSTRUCTION.

INDEXED REV. 1

	P G & E CO.	DRAWING NO.	REV.
	SHEET 115 OF SHEETS	049263	1

DSGN: P.K.

CHKD: DPC / AS

76-813

AREA 1G	LINE 1-S1-985-12 III P B	HANGER SYMBOL 57N 152R
EL. 107'-6"	NOS.	LOC. ON DWG. 500057

"Y" & "HORIZ" RESTRAINT

DESIGN CLASS I
CODE CLASS B

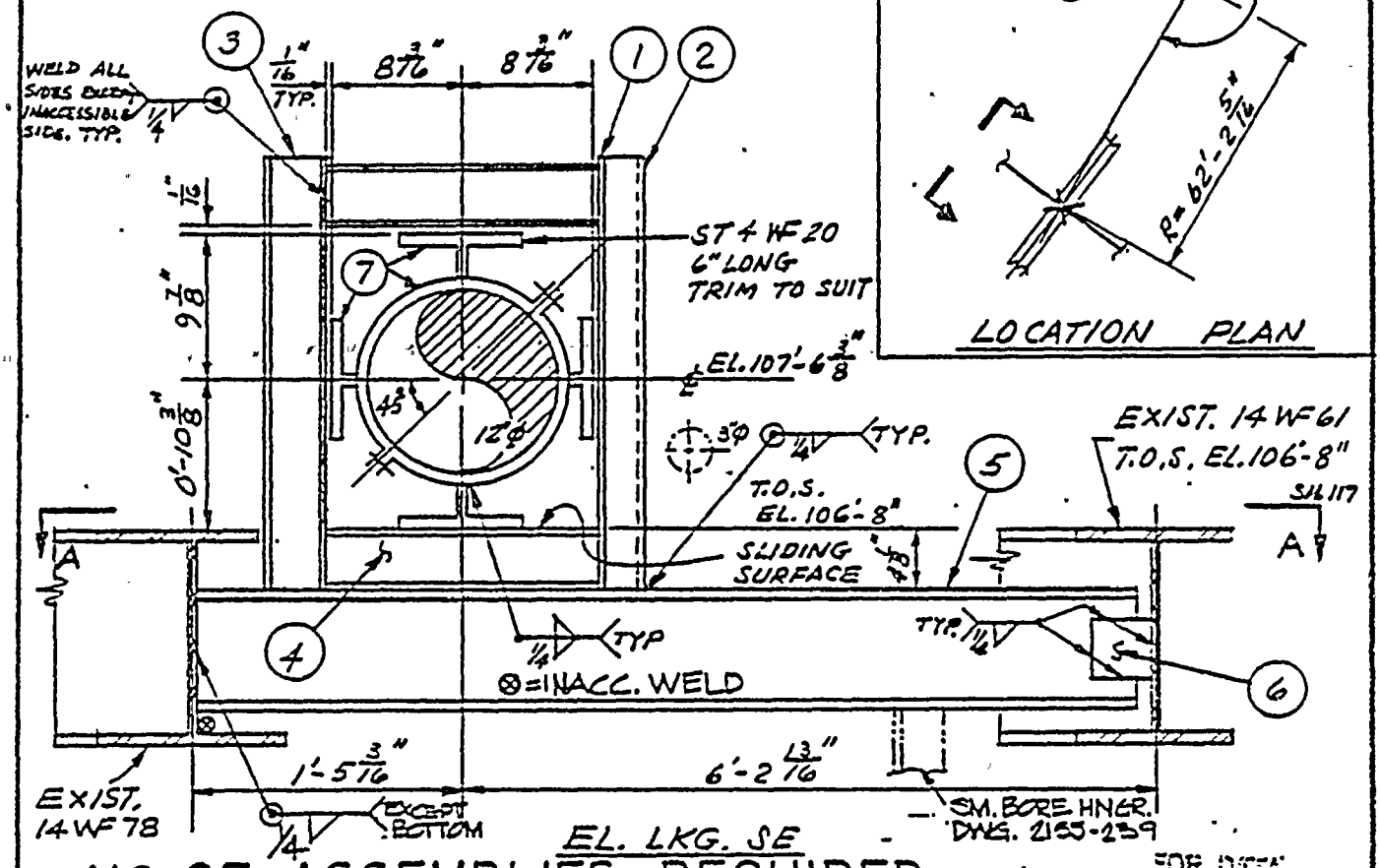

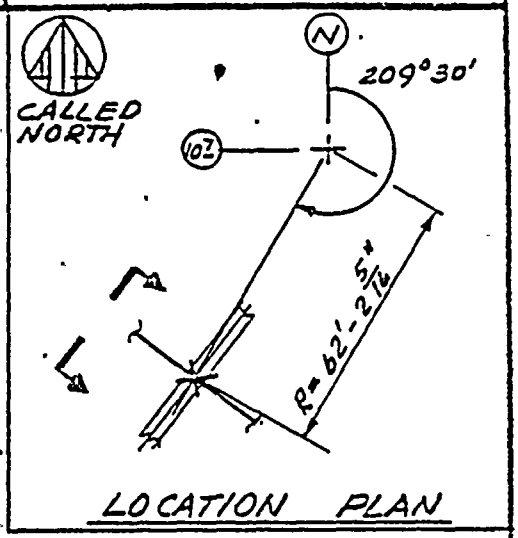

NO. OF ASSEMBLIES REQUIRED 1

FOR DATA SEE FILE 33

NO.	REQD	MATERIALS
1	1	PL 5" x 3/8", 2'-5" LG.
2	1	4 [7.25, 2'-5" LG.
3	1	4 WF 13, 2'-5" LG
4	2	4 WF 13, 1'-4 1/2" LG. EA. TRIM TO SUIT
5	1	8 WF 17, 7'-8" LG. TRIM TO SUIT
6	2	PL 4 x 3/8, 4" LG. EA.
7	1	12"Ø PIPE, 1 1/2" INSL. FIG. 256 MODIFIED SPIDER CLAMP AS SHOWN

~~AS-BUILT~~
~~FOR DESIGN REVIEW~~
RECEIVED ~~OCT 22 1981~~

REV. 2: M. W. KELLOGG "AS-BUILT" # ECO M-853

RM INDEXED REV. 2

P G & E CO.	DRAWING NO.	REV
SHEET 116 OF SHEETS	049263	2

#1

DR: RK. GS. 5/30/80

CK: AS SJ 5/30/80

60591

57N
152R

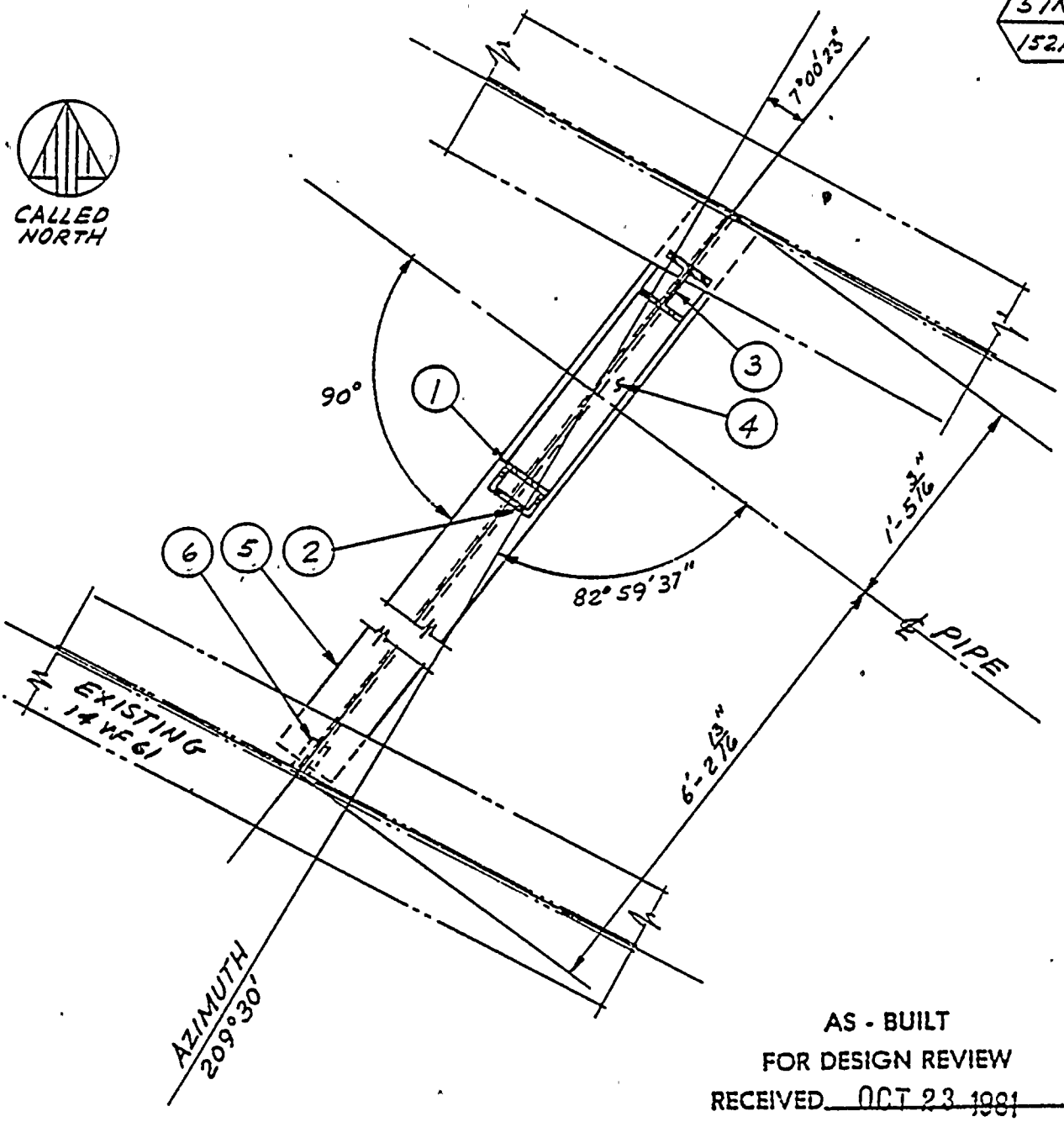

AS - BUILT
FOR DESIGN REVIEW
RECEIVED OCT 23 1981

SECT. A-A (SEE SH. 116)

REVISED PER
M. ...

RM INDEXED REV. 2

#1	P G & E CO.	DRAWING NO.	CHANGE
	SHEET 117 OF SHEETS	049263	2

76-813

AREA 1G	LINE 1-SI-985-12 III P [B]	HANGER SYMBOL 57N / 153V
EL. 107'-6"	NOS. Residual Heat Removal·10	LOC. ON DWG. 500057

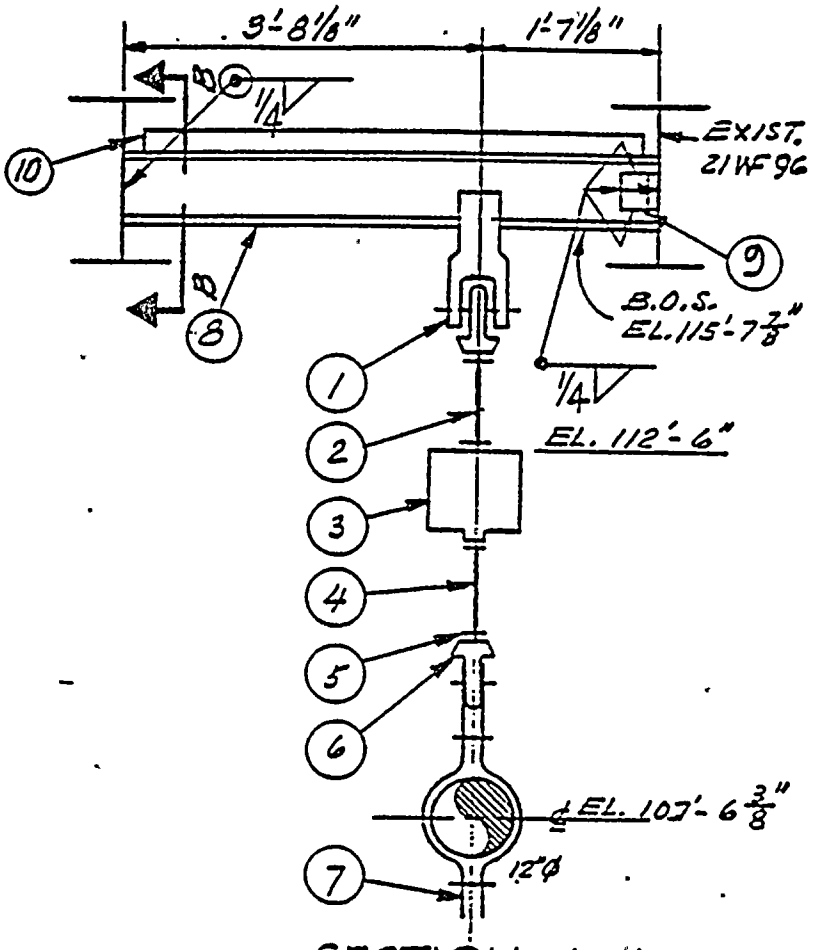

SECTION A-A

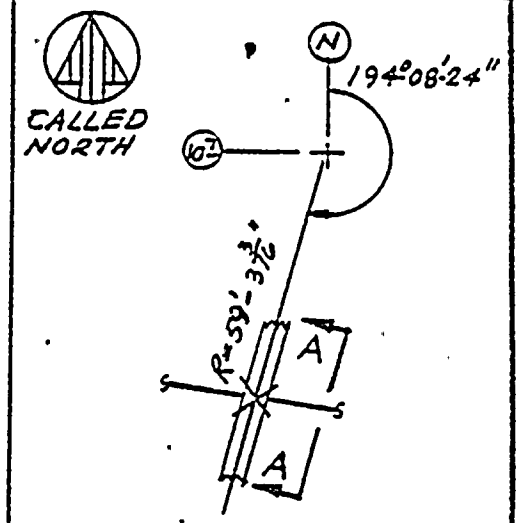

LOCATION PLAN

DESIGN CLASS I
CODE CLASS B

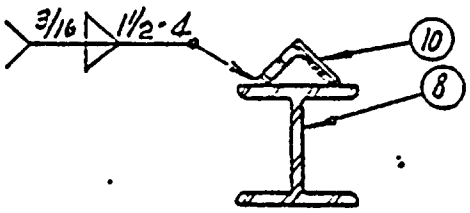

FOR DATA SEE FILE 33 SECT. B-B

NO. OF ASSEMBLIES REQUIRED 1

NO.	REQD	MATERIALS
1	1	SIZE 2, FIG. 292, 1" ROD.
2	1	1" x 2'-10 1/8" LG, FIG. 140.
3	1	SIZE 12 TYPE A, FIG. 82, HL = 2236#, CL = 2173#, MVMT = 0.07" DN.
4	1	1" x 3'-3 3/16" LG. FIG. 140.
5	4	1" HEX NUT.
6	1	1" FIG. 290.
7	1	12"Ø PIPE, FIG. 295.
8	1	4WF13, 5'-3 11/16" LG.
9	2	L 2" x 2" x 3/8" 2" LG.
10	1	L 2 1/2 x 2 1/2 x 3/8 - 5'-0" LG.

AS-BUILT
FOR DESIGN REVIEW
OCT 29 1981
RECEIVED

REV. 2: REVISED PER ECO 1012 M. W. KELLOGG (MVR M-2432) PPE AS BUILT 4-13-80

P G & E CO.
SHEET 118 OF SHEETS
DRAWING NO. 049263
EXHIBIT A

DESIGN: P.K / AC / FAE 5/19/80
DWN 7.1 Anastasio 9-22-80
SJ 9-22-80

REV. INDEXED REV. 1A

ITEM C

PIPING AND INSULATION SPECIFICATIONS

PIPING SPECIFICATION INDEX

SPEC.	MATERIAL	DESIGN COND. PRESS. PSIG.	DESIGN COND. TEMP. °F	MDS/SPEC DWG.	CHG. No.
B	RED BRASS	150	406	047205	
C	COPPER	125	100	047207	
C1	COPPER	125	100	047208	
D	CAST IRON	150	150	047209	
E	POLYVINYL CHLORIDE (PVC)	150	75	047214	
F	CARBON STEEL SARAN LINED	125	200	047216	
F1	CARBON STEEL POLYPROPYLENE LINED	250	200	058863*	17
G	CARBON STEEL PARALINED	150	180	047218	
G1	CARBON STEEL PARALINED	100	125	047219	
H	CARBON STEEL GALVANIZED	275	100	047221	
J	CARBON STEEL PICKLED	150	500	047224	
K	CARBON STEEL (INCLUDES 152 (W))	150	500	047225	
K2	CARBON STEEL (302 (W))	405	650	047227	
K6	CARBON STEEL (902 & 1502 (W))	1030	650	047231	
K12	CARBON STEEL	600	400	047237	
K13	CARBON STEEL (602 (W))	600	650	047238	

* FOR DIABLO CANYON CONDENSATE POLISHING SYS.

CHIEF								
PROJ. MECH. ENGR.								
CHANGE NO.		17						
COORDINATED APPROVAL FOR CONSTRUCTION								

REGISTERED PROFESSIONAL ENGINEER
D. V. KELLY
No. 9269
MECHANICAL
STATE OF CALIFORNIA

UNITS 1 & 2

COAST VALLEYS DIVISION

CHG.	DATE	DESCRIPTION	GM	BY	CH.	APPD.
16	10-18-78	ADDED BRAZE SEAL NOTES (INSIDE PANEL) TO SPECIFIC NOTES SHEET 5A PER DCO-G-M-027	169972	RY		
13	10-29-73	ADDED SHEET 5A (SPEC. "S" NOTES)	169972	RV		
17	5-6-80	ADDED F1 SPEC 1 REVISED K12 SPEC PER DCO-EM-4A	1902701	T.O	MGG	
15	8-14-79	ADDED EXEMPTION NOTE TO SPECIFIC NOTES-SHT. 5A	169972	CK	RY	
14	9-6-79	REVISED SPEC. S NOTES - SHT 5A	167027	NGS	RY	

APPROVED BY

SUPV. BY S. KASCHUBE
DSGN. S. BERNHOFF
DR. S.A.B.
CH.
O.K. GAK
DATE 10-6-71
SCALE NONE

PIPING SPECIFICATIONS
INDEX, GENERAL & SPECIFIC NOTES, SERVICES
DIABLO CANYON
DEPARTMENT OF ENGINEERING
PACIFIC GAS AND ELECTRIC COMPANY
SAN FRANCISCO, CALIFORNIA

DRAWING LIST
SUPERSEDES REV. 0
SUPERSEDED BY (INCL. 5A)
SHEET NO. 1 of 19 SHEETS
DRAWING NUMBER 049021
CHANGE 17

PRINTED ON DIEPO NO. 1000H CLEARPRINT 5-69

35 M/M NEG 17

RM INDEX 17

PIPING SPECIFICATION INDEX

SPEC	MATERIAL	DESIGN COND. PRESS PSIG.	DESIGN COND. TEMP. °F	MDS/SPEC DWS.	CHS. No.
K14	CARBON STEEL	1085	600	047239	
K15	CARBON STEEL	1085	600	047240	
K16	CARBON STEEL	1415	450	047241	
K17	CARBON STEEL (2503 (W))	2500	650	047242	
S	STAINLESS STEEL TUBING (153, 154, 2505, 2506 (W))	2500	650	047282	8
S1	STAINLESS STEEL (601 (W))	700	400	047283	
S2	STAINLESS STEEL (151 (W))	150	500	047284	
S3	STAINLESS STEEL (301 (W))	370	650	047285	
S5	STAINLESS STEEL (901 & 1501 (W))	1400	650	047287	
S6	STAINLESS STEEL (2501 & 2502 (W))	2580	650	047288	
S8	STAINLESS STEEL	50	100	047290	

FRONT	1	3	5	6	8
BACK	2	4	SA	7	

GENERAL NOTES

1. Power piping shall conform to the edition of ANSI B31.1.0, ANSI B31.7 or ASME Boiler Code Section I called out in Spec. 8711 or Spec. 8707 plus addenda.

2. Butt weld end preparations shall conform to PFI STD. ES-21 for TIG root pass welding only.

3. Torque on all bolts and studs per Crane Catalog 60, Pages 383 and 384 lube with High Temperature lubricant.

4. Reactor Coolant Piping and Pressurizer Surge Line, refer to (W) Specs. G-676496 and G-676343 for field and shop fabrication details.

5. Piping Code Key

PG&E CODE	NUCLEAR CODE CLASS	DESIGN CLASS
A	NUCLEAR CLASS I	I
B	NUCLEAR CLASS II	I
C	NUCLEAR CLASS III	I
E	STANDARD	II
G	NFPA PIPING	I

6. PG&E Code Classes A, B, or C piping, as indicated on piping schematics, will have base materials, documentation, N.D.E., welding and Quality Assurance as required by the 1969 edition of ANSI B31.7 and 1970 addenda, Nuclear Power Piping Classes I, II or III and Code Cases accepted by PG&E and by the State of California Division of Industrial Safety.

7. PG&E Code Class E piping shall comply in all respects with the 1967 edition of ANSI B31.1 and addenda accepted by PG&E.

8. Piping branch connections per MDS/Spec. Dwg. 049019 unless noted otherwise on area drawings.

9. Ultrasonic examination on Code Class A materials is required per ANSI B31.7 Class I in addition to supplementary tests listed on individual pipe specs.

60591
76-8
35 M/M NEG 3

. Welded S.S. pipe conforming to ASTM A 358 Class I of same grade may be substituted wherever A 312 seamless construction is specified in sizes 8" or larger. Where ASME Boiler & Pressure Vessel Code Sect. XI inservice inspection requirements make seamless desirable, it should be used where available.

11. Stainless steel materials of carbon content less than 0.04% shall not be substituted without approval of P.G.&E. Co.

12. No bending thinning allowance is made on the calculations of minimum wall of piping listed under the various piping specifications. Any piping to be bent must meet or exceed the minimum wall thicknesses listed after bending, or meet or exceed the minimum wall thickness of the nominal wall piping Specs. after bending. This must be verified by ultrasonic or other measuring methods or a bending thinning allowance made for piping in the bent sections of pipe per ANS B31.1.0 - 1967, Table 102.4.5.

. ASTM A 53 pipe shall not be used in Code Class A or B (B 31.7 Class I or II) Systems but may be used in B 31.1 Systems and B 31.7 Class III, if allowed by the particular piping Spec.

14. A 105 Grade I or II Fittings ordered prior to 1971 Revision of A105 are acceptable.

60591

SPECIFIC NOTES

SPEC.	
F	Do Not Use This Spec. For Code Class A or B Piping Systems.
F1	Do Not Use This Spec. For Code Class A or B Piping Systems.
G	Do Not Use This Spec. For Code Class A or B Piping Systems.
G1	Do Not Use This Spec. For Code Class A or B Piping Systems. This Spec. is to be Used For Auxiliary Salt Water System Only Spec. 8831R & 8841. Refer To File 116.30 D.C. For Additional Details.
H	Do Not Use This Spec. For Code Class A or B Piping Systems.
J	Do Not Use This Spec. For Code Class A or B Piping Systems.
K	Do Not Use This Spec. For Code Class A or B Piping Systems.
K14	Mainsteam Dump And Crosstie Systems Downstream of Isolation Valves - Refer To P.G.&E. Spec. 8707 For Additional Details of Welding, Q.A., N.D.E., Etc.
K15	Mainsteam Steam Generator Outlet to Isolation Valves Outside of Containment - Refer to P.G.&E. Spec. 8707 For Additional Details of Welding, Q.A., N.D.E., Etc.
K16	Feedwater and Steam Gen. Blowdown, and Aux. F.W. from Steam Generators to Isolation Valves per ASME Boiler Code Sect. I, Refer To P.G.&E. Spec. 8707 For Additional Details of Welding, Q.A., N.D.E., etc.
S1	On Lines Under Jurisdiction of ASME Sect. XI Requirements as Shown on Dwg. #102028 Seamless Pipe And Fittings Shall Be Used Wherever Available To Minimize Inservice Inspection Requirements. 300Lb Gr. F316 Stainless Steel Flanges may be Substituted for the 600Lb Gr. F304 Stainless Steel Flanges Specified for RHR Loops Only. Pressurizer Relief Lines will have Specified Lengths of Sch. 80 Pipe and Fittings. other Requirements are as specified on S1 Spec.
S1,S2 S3,S5	Radiography of Longitudinal Welds on ASTM A358 Pipe (Class I) is Required for ANSI B31.7 Class I & II Only, Not For Class III, Provided 100% Dye Penetrant Inspection Is Performed on Class III. Refer to 1970 addenda of ANSI B31.7 App. A, Table A.7(b)
S2	Change 4 of this Spec. allowed the use of Sch.10S pipe in the 10"&12" Sizes. Material purchased to this Spec. before Change 5 is acceptable

35 JM NEG 17

SPECIFIC NOTES

SPEC

FITTINGS ON TUBING RUNS IN THE SYSTEMS LISTED BELOW SHALL BE:

1. SOCKET-WELD OR HI-SEAL AT THE ROOT VALVE.
2. SOCKET-WELD BETWEEN ROOT VALVE CONNECTION AND BULKHEAD OR LOCAL INSTRUMENT CONNECTION.
3. HI-SEAL AT BULKHEAD OR LOCAL INSTRUMENT CONNECTION.
4. HI-SEAL [illegible] OR SOCKET-WELD ON TUBING INSIDE PANEL.*

APPLICABLE SYSTEMS:

A. REACTOR COOLANT
B. CHEMICAL VOLUME AND CONTROL
C. NSS SAMPLING
D. SAFETY INJECTION
E. CONTAINMENT SPRAY
F. RESIDUAL HEAT REMOVAL
G. SPENT FUEL PIT COOLING

EXEMPTION: GAS SAMPLE TUBING, P.G.&E. CODE CLASS E, SHALL BE COVERED BY THE CRITERIA FOR ALL OTHER SYSTEMS, AS SHOWN BELOW.

FITTINGS FOR ALL OTHER SYSTEMS SHALL BE AS FOLLOWS:

1. HI-SEAL, BRAZE-SEAL, OR SOCKET-WELD ON ALL CONNECTIONS EXCEPT BULKHEAD AND INSTRUMENT CONNECTIONS. 16
2. HI-SEAL OR BRAZE-SEAL ON BULKHEAD AND INSTRUMENT CONNECTIONS. (BRAZE-SEAL PREFERRED)

DYE PENETRANT EXAMINATION OF THE SOCKET-WELD JOINTS MUST BE PERFORMED AND RECORDED. (FOR CLASS I SYSTEMS ONLY.)

*EXISTING BRAZE-SEAL FITTINGS INSIDE MECHANICAL PANELS ARE ACCEPTABLE AS IS. 16

15 PER ECO M-885 6-24-75

6059r

SERVICE INDEX

SPEC.	(W) SPEC.	SERVICE DESCRIPTION	PIPING SCHEM. DWG.
K		Air Ejector	102002
K		Component Cooling System	102014
S2		Chemical and Volume Control System	102008
S6		Excess Letdown Ht. Xchg. Inlet	
S6		Excess Letdown Ht. Xchg. Outlet	
S1		Letdown Heat Exchanger Inlet	
S6		Regenerating Heat Exchanger Inlet	
D		Circulating Water System	102017
K		Chlorination Piping From Chlorine Ton Tanks To Chlorinator	
G1		Aux. Salt Water System	
D,K		Saw Dust Injection Water	
D,B		Traveling Screen Washwater	
G		Condenser Water Box Vents	
K		Compressed Air System	102025
C		Instrument Air After Filter Outlet Valve	
C		Containment Instrument Air	
K		Condensate System	102002
K12		Condensate Booster Pump Discharge	
K12		Feedwater Heater No. 2-A, B, C, Outlets	
K		Condenser, Steam Side	102017
F1		Condensate Polishing System	102002
K		Make-Up Water System	102016
S2		Primary Make-Up Tank Inlet	
S2		Primary Water Make-Up Pump Discharge	

17

35 MM NEG 17

SERVICE INDEX

	(W) SPEC.	SERVICE DESCRIPTION	PIPING SCHEM. DWG.
		Sea Water Evaporator	102016
		Sea Water To Evaporator	
		Distillate & Brine Recirculation	
16		Feedwater System	102003
		Fire Protection System	102018
		F.W. Heater Drip System	102005
2		Drips From F.W. Heater No. 1 - A, B, C	
2		F.W. Heater No. 1 - A, B, C, Shell Vents & Drains	
		Lube Oil System	102020
		All Piping Except Vents	
		Reactor Coolant Piping System	102007
1	601	Pressurizer R.V. Discharge	
6	2501	Pressurizer Spray Line	
	2501	Pressurizer Surge Line (W)	
	2501	Reactor Coolant Out Loops (W)	
	2501	Reactor Coolant Pump Discharge (W)	
		* Refer to Westinghouse Specs. G676341 For The Pipe And G 676342 For The Fittings	
	2505	Sampling System	102011
		Service Cooling Water System	102015
2	151	Spent Fuel Pit Cooling System	102013

60591

SERVICE INDEX

SPEC.	(W) SPEC.	SERVICE DESCRIPTION	PIPING SCHEM. DWG.
		Spray Water	
S3	301	Containment Spray Inside Containment	102012
S2	151	Containment Spray Outside Containment	102012
S6	2501	Pressurizer Spray Lines From RCS	102007
K		Auxiliary Steam	102006
	(W)	Cold Reheat	102004
K		Extraction Steam	102005
K2		Steam To Feedwater Heater No. 1 - A, B, C	
K2		Hot Reheat	102004
	(W)	Reheat Steam To L.P. Turbine	
K14,15		Main Steam	102004
K15		Main Steam To Aux. Feed Pump No. 1 Drive Turb.	
K15		Main Steam From Steam Generators To Isolation Valves	
S2	151	Liquid Radwaste System	102019
S8		Acid Service Make-Up Water System	102016

INCL SHT 5A

35 MM. NEG 11

DESIGN CONDITIONS
150 PSIG, 406°F

PIPE

All Sizes — Regular Wall, Seamless Red Brass ASTM B43.

FITTINGS

All Sizes
(a) 150 Lb., "Walseal", Silver Brazing Ends; Bronze ASTM B62.
(b) 150 Lb., Flat Face, Cast Bronze with Integral Flanges ASTM B62.
(c) 125 Lb., Threaded, Cast Bronze ASTM B62.

FLANGES

All Sizes
(a) 150 Lb., Flat Face, "Walseal", Silver Brazing Ends, Bronze ASTM B62.
(b) 150 Lb., Flat Face, Threaded, Cast Bronze ASTM B62.

BOLTS — Machine, Hex Head, Heavy Series, Carbon Steel ASTM A307 Grade B, Galvanized.

NUTS — Hex Nuts, Heavy Series, Carbon Steel ASTM A194 Grade 2H, Galvanized.

WASHERS — Standard, Flat, Steel, Galvanized.

GASKETS — 1/8" Thick, Full Face, Red Rubber.

NOTES
1. Dissimilar Metal Flange Connections Shall Have Insulating Gasket, Bolts, Sleeves and Washers for Cathodic Insulation.
2. Mating Flanges Shall Be Flat Face.

CHG.	DATE	DESCRIPTION	APPRD.	CHG.	DATE	DESCRIPTION	APPRD
2	11-23-70	REISSUED-NO CHANGES	AGW				
1	4-20-71	ISSUED FOR BIDS-SPEC 0350	AGW	3	10-8-71	REVISED AND REISSUED	AGW

APPROVED AGW

BY S. Boghosian
DSGN. S.K.B.
DR. P. Kodani
CH. Branson
O.K. RHS/KAM
DATE 8-12-68 SCALE None

MECHANICAL DESIGN STANDARD
DESIGN
PIPING SPECIFICATION "B"
Department of Engineering
PACIFIC GAS AND ELECTRIC COMPANY
SAN FRANCISCO, CAL.

SUPERSEDES
SUPERSEDED BY
SHEET NO. SHEETS
DRAWING NUMBER 047205 CHANGE 3

35 MIM Pg 3

DESIGN CONDITIONS
125 PSIG, 100°F

PIPE

3/4" & Over — Seamless Copper, Water Tube, ASTM B88, Drawn Temper, Type L.

FITTINGS

1" & Over — Wrought Copper

FLANGES

1" & Over — 125 Lb., Flat Face, Standard Weight, Silver Solder Type, Bronze ASTM B61.

BOLTS — Machine, Hex Head, Heavy Series, Carbon Steel ASTM A307 Grade B.

NUTS — Hex Nuts, Heavy Series, Carbon Steel ASTM A194 Grade 2H.

WASHERS — Standard, Flat, Steel, Cadmium Plated.

GASKETS — 1/16" Thick, Full Face, Compressed Asbestos Fiber Composition.

NOTES

1. Dissimilar Metal Flange Connections Shall Have Insulating Gasket, Bolts, Sleeves and Washers For Cathodic Insulation.
2. Mating Flanges Shall Be Flat Face.

APPROVED BY	CHG.	DATE	DESCRIPTION	GM	BY	CH.	APPD
	4	3-7-73	REV. PIPE SIZE TO 3/4" & OVER		GJS	RKS	
	3	10-8-71	REVISED AND REISSUED		GR	GJS	
	2	11-23-70	REISSUED - NO CHANGES		RLB	VB	
	1	4-20-70	ISSUED FOR BIDS - SPEC 9350		RKS		

SUPV. BY S. Boghosian
DSGN. S.K.B.
DR. P. Kodani
CH. Branson
O.K. RHS/GTB
DATE 8-12-68 SCALE None

MECHANICAL DESIGN STANDARD
DESIGN
PIPING SPECIFICATION "C"
Department of Engineering
PACIFIC GAS AND ELECTRIC COMPANY
SAN FRANCISCO, CALIFORNIA

DRAWING LIST
SUPERSEDES
SUPERSEDED BY
SHEET NO. SHEET
DRAWING NUMBER 047207 CHANGE 4

DESIGN CONDITIONS
125 PSIG, 100°F

SINGLE TUBING:

3/4 & Under — Seamless Copper Water Tube, Annealed, ASTM B88. Type "K".

Standard Size	Nominal Wall Thickness
1/4"	0.035"
3/8"	0.049"
1/2"	0.049"
5/8"	0.049"
3/4"	0.065"

BUNDLE TUBING:

Seamless Copper Tube, Bright Annealed, ASTM B68, Type DHP

1/4" O.D. x 0.030" Wall Thickness

FITTINGS:

All Sizes — End of Run:- Brass "Imperial Hi-Seal"
Tube to Tube: Wrought Copper Silver Soldered

No Flares Permitted.

APPROVED BY								
6-1-72	SVR	3	5-7-73	REV. FITTING SPECIFICATION		KCS	KCS	
		2	6-14-72	REV. 'ACTUAL O.D.' TO 'STANDARD SIZE'		KCS	KCS	
6-1-72		1	6-1-72	APPROVED FOR CONSTRUCTION		KCS	KCS	
		CHG.	DATE	DESCRIPTION	GM	BY	CH.	APPD.

SUPV. BY K.C.Stewart
DSGN. G.Bernhoff
DR. S.J.Toy
CH. GLE.
O.K. KCS.
DATE 6-1-72 SCALE NONE

MECHANICAL DESIGN STANDARD
DESIGN
PIPING SPECIFICATION "C-1"
Department of Engineering

PACIFIC GAS AND ELECTRIC COMPANY
SAN FRANCISCO, CALIFORNIA

DRAWING LIST
SUPERSEDES
SUPERSEDED BY
SHEET NO. SHEETS
DRAWING NUMBER 047208 CHANGE 3

PRINTED ON DIEPO NO. 1000H CLEARPRINT 3-71

DESIGN CONDITIONS
150 PSIG, 150°F

PIPE

3" - 24"	Cast Iron Material, Centrifugally Cast to ANSI A21.6, With Threaded On Flanges, 125lb. Drilling In Accordance With ANSI B16.1
3" - 10"	Class Of Pipe To Be Threaded Is 250 .
12" - 24"	Class Of Pipe To Be Threaded Is 150

FITTINGS

3" & Over	Cast Iron Material Flanged, Per ANSI A 21.10, 150lb. Pressure Class Rating Minimum 125lb. Flange Drilling Per ANSI B 16.1.
BOLTS	Machine, Hex Head, Heavy Series, Carbon Steel ASTM A307 Grade B, Galvanized.
NUTS	Hex Nuts, Heavy Series, Semi-Finished, Carbon Steel ASTM A194 Grade 2H, Galvanized.
GASKETS	1/8" Thick, Full Face, Red Rubber.

CHG.	DATE	DESCRIPTION	GM	BY	CH.	APPR
6	3-7-73	DELETED 'FLAT RING' FROM GASKET SPECIFICATION		GAB	KCC.	
5	10-8-71	REDRAWN AND REISSUED		GR	GAB	

APPROVED BY

SUPV. BY G. KASCHUBE
DSGN. G. BERNHOFF
DR. G.A.B.
CH.
O.K. G.A.K.
DATE 10-8-71 SCALE NONE

MECHANICAL DESIGN STANDARD
DESIGN
PIPING SPECIFICATION "D"
Department of Engineering
PACIFIC GAS AND ELECTRIC COMPANY
SAN FRANCISCO, CALIFORNIA

DRAWING LIST
SUPERSEDES
SUPERSEDED BY
SHEET NO. 1 of 2 SHEETS
DRAWING NUMBER 047209 CHANGE 6

35 MM Neg. 6

NOTES:

1. This Standard is to be used for Piping Above Ground Only. For Buried Pipe a Special Design is required.

2. Mating Flanges Shall Be Flat Face.

3. Dissimilar Metal Flange Connections shall have Insulating Gasket, Bolts, Sleeves and Washers for Cathodic Insulation.

4. Bolt Holes on all Flanges shall be Back Faced or Spot Faced to Provide Proper Seats for Nuts.

DESIGN CONDITIONS
100 PSIG, 150°F

PIPE

All Sizes	Cast Iron Material to ASTM A377, Centrifugally Cast to USAS A21.6 or A21.8, Laying Condition "F" with 3½ feet of cover, Cast Flanges to USAS B16.1 (125 Lb.)
3" - 12"	Wall Thickness Class 22
14" - 48"	Wall Thickness Class 21

Wall Thickness for Pipe Sizes Above 48" Shall be Calculated According to USAS A21.1 - 1967.

FITTINGS

3" & Over	Cast Iron Material to ASTM A126 Class A for Sizes 12" & Under, Class B for 14" and Above. 125 Lb. Standard, Flat Face, Flanged Fittings to USAS B16.1.

MECHANICAL JOINTS	See Note 5.
All Sizes	Mechanical - Joint Fittings to USAS A21.10, Complete with Bolted Joint of Stuffing Box Type as Described in USAS A21.11 with High Strength Cast Iron Bolts & Nuts.
3" - 12"	250 PSIG Rating
14" - 48"	150 PSIG Rating
BOLTS	Machine, Hex Head, Heavy Series, Carbon Steel ASTM A307 Grade B, Galvanized.
NUTS	Hex Nuts, Heavy Series, Semi-Finished, Carbon Steel ASTM A194 Grade 2H, Galvanized.
GASKETS	1/8" Thick, Full Face, Red Rubber, Flat Ring.

VOID

Chg.	Date	Description	Approd.	Chg.	Date	Description	Approd.
2	4-20-70	ISSUED FOR BIDS - SPEC 9350	DOP	4	11-23-70	REISSUED - NO CHANGES	[illegible]
1	1-5-70	REVISED NOTE #1	[illegible]	3	7-14-70	REVISED NOTE 1 - Sheet 2	[illegible]

APPROVED [illegible]

BY S. Boghosian	MECHANICAL DESIGN STANDARD	SUPERSEDES
DSGN. S.K.B.	DESIGN	SUPERSEDED BY
DR. P. Kodani	PIPING SPECIFICATION "D"	SHEET No. 1 2 SHEETS
CH. Branson	Department of Engineering	DRAWING NUMBER [illegible]
O.K. RHS/[illegible]	PACIFIC GAS AND ELECTRIC COMPANY	CHANG. 4
DATE 9-19-68 / SCALE None	SAN FRANCISCO, CAL.	

VOID

NOTES:

1. Cast Iron Wall Pipes (Spools) with Collars. Anchor Clamps Similar to Grinnell Fig. 261, Sized for O.D. of Pipe, Shall be used as Collars. (Locations where there is a possibility of Water Seepage, Screwed Flange Assemblies Shall be Used Instead of Clamps Where Specified on Piping Drawings).

2. When Bolting 150 Lb. Standard Steel Flanges to Flat Face Cast Iron Flanges, the Steel Flange Shall be Furnished with a Flat Face.

3. Dissimilar Metal Flange Connections shall have Insulating Gasket, Bolts, Sleeves and Washers for Cathodic Insulation.

4. Bolt Holes on All Flanges Shall be Back Faced or Spot Faced to Provide Proper Seats for Nuts.

5. Mechanical Joints shall be used only where specified on Piping Layout Drawings.

DESIGN CONDITIONS
150 PSIG, 75°F
93 PSIG, 100°F
45 PSIG, 130°F

PIPE

4" & Under — Schedule 80, Polyvinyl Chloride (PVC 1120) ASTM D1785.

FITTINGS

4" & Under — Schedule 80, Polyvinyl Chloride (PVC I) ASTM D2467.

FLANGES

4" & Under — Schedule 80, Flat Face, Socket-Type, Polyvinyl Chloride (PVC I) ASTM D2467, Faced and Drilled to 150 Lb. ANSI B16.5.

BOLTS

Hex Head, Heavy Series, Carbon Steel ASTM A307 Grade B, Galvanized.

NUTS

Hex Nuts, Heavy Series, Semi-Finished, Carbon Steel ASTM A194 Grade 2H, Galvanized.

GASKETS — 1/8" Thick, Full Face, Red Rubber.

NOTES
1. Solvent Cement Shall Be In Accordance With ASTM D2564 for All PVC Pipe and Fittings.
2. Mating Flanges Shall Be Flat Face.

Chg.	Date	Description	Appd.	Chg.	Date	Description	Appd.
				5	3-28-3	REVISED DESIGN CONDITIONS	
2	4-7-76	ISSUED FOR BIDS SPEC 9350		4	10-8-71	REVISED AND REISSUED	
1	3-31-70	REV. DESIGN CONDITIONS		3	11-23-70	REISSUED-NO CHANGES	

APPROVED

BY S. Boghosian
DSGN S.K.B.
DR. P. Kodani
CH. Branson
O.K. RHS/

Date 8-12-68 | Scale None

MECHANICAL DESIGN STANDARD
DESIGN
PIPING SPECIFICATION "E"
Department of Engineering
PACIFIC GAS AND ELECTRIC COMPANY
SAN FRANCISCO, CAL.

Supersedes
Superseded By
Sheet No. Sheets
Drawing Number 047214 Change 5

PRINTED ON DIEPO NO. 1000N CLEARPRINT 11-47

DESIGN CONDITIONS
125 PSIG, 200°F

PIPE

1" & Over — Schedule 40, Carbon Steel ASTM A53 Grade A or B, Lined with 3/16" Thick Saran.

FITTINGS
1" & Over — 125 Lb., Flat Face, Flanged, Chamfered, Cast Iron ASTM A126 Class A, Saran Lined.

FLANGES
1" & Over — 125 Lb., Flat Face, Screwed, Chamfered, Cast Iron ASTM A126 Class A.

BOLTS

Hex Head, Heavy Series, Carbon Steel ASTM A307 Grade B, Galvanized.

NUTS

Hex Nuts, Heavy Series, Semi-Finished, Carbon Steel ASTM A194 Grade 2H, Galvanized.

GASKETS

Pipe Flange to Pipe Flange: Use Hypalon (Synthetic Rubber) "Full" Gasket.
Pipe Flange to Flanged Fitting: Use Hypalon (Synthetic Rubber) "Half" Gasket.
Flanged Fitting to Flanged Fitting: Use No Gasket.

NOTES

1. No Welding is Allowed on Saran Pipe or Fittings.
2. No Bending is Allowed on Saran Pipe. Use Tapered Spacers to Accomplish Bends.
3. Pipe Furnished in 10'-0" Maximum Lengths.
4. Mating Flanges Shall Be Flat Face.
5. Spacer shall be used when Making Connection Between Saran Lined Flanged Pipe and All Other Types of Flanged Piping and Equipment.
6. Molded Raised Face Pipe Flange Joints, without Gaskets, May be used as Acceptable Substitute.

CHG.	DATE	DESCRIPTION	APPR.	CHG.	DATE	DESCRIPTION	APPR.
				5	3-7-73	DELETED 'SEAMLESS' FROM PIPE SPEC.	[illegible]
2	4-20-73	ISSUED FOR BIDS - SPEC 9350	[illegible]	4	10-8-71	REVISED AND REISSUED	[illegible]
1	3-15-69	ADD NOTES, FLANGES: REV. NOTE 2, PIPE, GASKET	[illegible]	3	11-23-70	REISSUED - NO CHANGES	[illegible]

APPROVED [illegible]

BY S. Boghosian	MECHANICAL DESIGN STANDARD	SUPERSEDES	
DSGN. S.K.B.	DESIGN	SUPERSEDED BY	
DR. P. Kodani	PIPING SPECIFICATION "F"	SHEET No.	SHEET
CH. Branson	Department of Engineering	DRAWING NUMBER	CHAN
O.K. RHS/[illegible]	PACIFIC GAS AND ELECTRIC COMPANY	047216	5
DATE 8-12-68 / SCALE None	SAN FRANCISCO, CAL.		

35 MM Neg. 5

PRINTED ON DIEPO NO. 1000H CLEARPRINT 11-67

DESIGN CONDITIONS
150 PSIG, 180°F

PIPE

1-1/2" & Over	Seamless or Electric Resistance Welded Carbon Steel ASTM A53 Grade A or B, "Paralined".
1-1/2" & 2"	Schedule 40
2½" - 24"	Standard Weight

FITTINGS

1-1/2" & 2"	3000 Lb., Socket Welding-Ends, Forged Carbon Steel ASTM A105 Grade I or II, "Paralined".
2½" - 24"	Standard Weight, Butt-Welding Ends, Wrought Carbon Steel ASTM A234 Grade WPA or WPB. Paralined.

FLANGES

All Sizes	150 Lb., Slip On Flat Face, Forged Carbon Steel ASTM A181 Grade 1, "Paralined".

BOLTS

Machine, Hex Head, Heavy Series, Carbon Steel ASTM A307 Grade B, Galvanized.

NUTS

Hex Nuts, Heavy Series, Semi-Finished, Carbon Steel ASTM A194 Grade 2H, Galvanized.

GASKETS

1/8" Thick, Full Face, Red Rubber.

CHG.	DATE	DESCRIPTION	APPRD.	CHG.	DATE	DESCRIPTION	APPRD.
6	10-8-71	REVISED AND REISSUED	AGW	5	11-23-70	REISSUED - NO CHANGES	AGW
2	1-5-70	REVISED PIPE SCHEDULE	AGW	4	7-14-70	ADD PARALINE TO FITTINGS, REVSD NOTE 1	AGW
1	3-13-69	REVISED FLANGE TYPE	AGW	3	4-26-70	ISSUED FOR BIDS - SPEC 9350	[illegible]

APPROVED AGW

BY	S. Boghosian
DSGN.	S.K.B.
DR.	P. Kodani
CH.	Branson
O.K.	RHS/GTM
DATE	8-12-68
SCALE	None

MECHANICAL DESIGN STANDARD
DESIGN
PIPING SPECIFICATION "G"
Department of Engineering
PACIFIC GAS AND ELECTRIC COMPANY
SAN FRANCISCO, CAL.

SUPERSEDES
SUPERSEDED BY
SHEET No. 1 2 SHEETS
DRAWING NUMBER 047218
CHANGE 6

35 MIM Nov 16

NOTES

1. All Assemblies Including Piping, Fittings, Flanges, Etc., Shall be "Paralined" with 1/8" Thick Type RD After Shop Fabrication. Fabricator shall Insure that Maximum Lengths of Assemblies That are Capable of Being Lined are Not Exceeded. For Flanged Ends, Paraline Shall Cover The Full Face of Flanges. Bolt Holes Shall be Kept Free from Lining.
2. Interior Welds Shall be Ground Smooth. Interior Surfaces of Pipe Shall Be Free from Sharp Ridges and Scale Inclusions, Prior to Lining.
3. No Field Welding or Field Bending is Allowed on This Piping Specification.
4. Mating Flanges Shall Be Flat Face.

DESIGN CONDITIONS
100 PSIG, 125°F

PIPE

4" - 24" O.D. Standard Weight, Seamless Carbon Steel ASTM A53 GRB Pipe. "Paralined".

FITTINGS

4" - 24" O.D. Wrought Carbon Steel ASTM A234 Grade WPA or B Schedule to Match Pipe. "Paralined".

FLANGES

125lb. Light Weight Slip On, ASTM A 181 GR 11

BOLTS

Machine, Hex Head, Heavy Series, Semi-Finished, Carbon Steel ASTM A307 Grade B, Galvanized.

NUTS

Hex Nuts, Heavy Series, Semi-Finished, Carbon Steel ASTM A194 Grade 2H, Galvanized.

GASKETS

1/8" Thick, Full Face, Red Rubber.

CHG.	DATE	DESCRIPTION	GM	BY	CH.	APPD
3	10-8-71	REDRAWN AND REISSUED		GK		

APPROVED BY

SUPV BY G. KASCHUBE
DSGN. S. BERNHOFF
DR. G.A.S.
CH.
O.K. G.A.K.
DATE 10-8-71 SCALE NONE

MECHANICAL DESIGN STANDARD
DESIGN
PIPING SPECIFICATION "G1"
Department of Engineering
PACIFIC GAS AND ELECTRIC COMPANY
SAN FRANCISCO, CALIFORNIA

DRAWING LIST
SUPERSEDES
SUPERSEDED BY
SHEET NO. 1 OF 2 SHEET
DRAWING NUMBER 047219 CHANGE 3

PRINTED ON DIEPO NO. 1000H CLEARPRINT 3-71

NOTES:

1. All Piping and Fittings shall be "Paralined" with 1/8" thick Type AR After Shop Fabrication. All Exterior Surfaces of Pipe and Fitting Shall be Coated with 1/16" thick Type AR. Lining and Coating Shall be Free From Voids and Blisters. Fabricator Shall Insure that Maximum Lengths of Assemblies that are Capable of Being Lined are not Exceeded.

2. Interior Welds Shall Be Ground Smooth. Interior Surfaces of Pipe Shall be Free From Sharp Ridges and Scale Inclusions, Prior to Lining.

3. Interior Lining Shall be Able to Withstand a 20,000 Volt Spark Test (Test to be Conducted Before Exterior Coating is Applied). Exterior Coating to be Tested at 1500 Volts.

4. No Field Welding or Field Bending is Allowed on This Piping Specification.

5. Mating Flanges Shall Be Flat Face.

DESIGN CONDITIONS
100 PSIG, 125°F

PIPE

2½" & Over
4½" O.D. - 36" O.D. — ¼" Thick Wall, Seamless or Electric-Welded Carbon Steel API 5L Grade B Flanged Pipe. 125 Lb. Light Weight Butt-Welding Flanges to ASTM A181 Grade I. "Paralined" (See Note 1.).

42" O.D. - 48" O.D. — ¼" Thick Wall, Spiral-Welded Carbon Steel ASTM A211 Flanged Pipe, Inside Seam, Flush Ground. Plate to ASTM A245 Grade C. 125 Lb. Light Weight Butt-Welding Flanges to ASTM A181 Grade I. "Paralined" (See Note 1.).

FITTINGS

2½" & Over
4½" O.D. - 48" O.D. — 150 Lb., Flat Face, Flanged Fittings, Fabricated Wrought Carbon Steel ASTM A234 Grade WPB. Schedule or Wall Thickness to Match Pipe. "Paralined". (See Note 1).

BOLTS

Machine, Hex Head, Heavy Series, Semi-finished, Carbon Steel ASTM A307 Grade B, Galvanized.

NUTS

Hex Nuts, Heavy Series, Semi-Finished, Carbon Steel ASTM A194 Grade 2H, Galvanized.

GASKETS

1/8" Thick, Full Face, Red Rubber.

VOID

APPROVED BY								
		2	11-23-70	REISSUED - NO CHANGES		RLB		
		1	11-20-68	REVISED NOTES & PIPE SIZE		JRB		
		CHG.	DATE	DESCRIPTION	GM	BY	CH.	APPD.

SUPV. BY S. Boghosian
DSGN. S.K.B.
DR. P. Kodani
CH. BRANSON
O.K. RHS/GMM
DATE 8-26-68 SCALE None

MECHANICAL DESIGN STANDARD
DESIGN
PIPING SPECIFICATION "G1"
Department of Engineering
PACIFIC GAS AND ELECTRIC COMPANY
SAN FRANCISCO, CALIFORNIA

DRAWING LIST
SUPERSEDES
SUPERSEDED BY
SHEET NO. 1 2 SHEETS
DRAWING NUMBER
CHANGE 2

NEW SHEET

DESIGN CONDITIONS
275 PSIG, 100°F

PIPE

All Sizes	Seamless or Resistance Welded Carbon Steel ASTM A53 Grade A or B, Galvanized Per ASTM A153.
2" & Under	Schedule 80, Threaded.
2½" & Over	Standard Weight, Butt-Welded.

FITTINGS

2" & Under	150 Lb., Screwed, Flat Banded, Malleable Iron ASTM A197, Threaded According to ANSI B2.1, Galvanized Per ASTM A153. 3000Lb., Threaded Half Coupling or Threaded Weld Couplet Forged Carbon Steel, ASTM A 105 GR I or II
2-1/2" & Over	Standard Weight, Butt-Welding Ends, Wrought Carbon Steel ASTM A234 Grade WPA or WPB.

FLANGES

2" & Under	150 Lb., Screwed, Malleable Iron ASTM A197, Threaded According to ANSI B2.1, Galvanized Per ASTM A153.
2½" & Over	150 Lb., Flat Face, Welding Neck or Slip-On, Faced and Drilled, Forged Carbon Steel ASTM A181 Grade I, Galvanized.

COUPLINGS

2" & Under	150 Lb., Screwed, Flat Banded, Malleable Iron ASTM A197, Threaded According to ANSI B2.1, Galvanized Per ASTM A153.

UNIONS

2" & Under	150 Lb., Screwed, Malleable Iron ASTM A197, Ground Joint, Threaded According to ANSI B2.1, Galvanized Per ASTM A153.
BOLTS	Machine, Hex Head, Heavy Series, Carbon Steel ASTM A307 Grade B, Galvanized.
NUTS	Hex Nuts, Heavy Series, Semi-Finished, Carbon Steel ASTM A194 Grade 2H, Galvanized.

Chg.	Date	Description	Appr.	Chg.	Date	Description	Appr.
3	10-8-71	REVISED AND REISSUED	NHM				
1	4-20-70	ISSUED FOR BIDS-SPEC 9350	DKP	2	11-23-70	REISSUED-NO CHANGES	NHM

APPROVED NHW

BYS. Boghosian	
DSGN. S. K. B.	
DR. P. Kodani	
CH. Branson	
O.K. RHS/GM	
Date 8-12-68	Scale None

MECHANICAL DESIGN STANDARD
DESIGN
PIPING SPECIFICATION "H"
Department of Engineering
PACIFIC GAS AND ELECTRIC COMPANY
SAN FRANCISCO, CAL.

Supersedes -
Superseded By
Sheet No. 1 2 Sheets
Drawing Number 047221 Change 3

35 MM Neg. 3

PRINTED ON DIEPO NO. 1000H CLEARPRINT 11-67

WASHERS

Standard, Flat, Steel, Galvanized

GASKETS

1/16" Thick, Full Face, Compressed Asbestos Fiber Composition.

NOTES

1. Galvanize Pipe Spools After Fabrication.

DESIGN CONDITIONS
150 PSIG, 500°F

PIPE

All Sizes	Seamless Carbon Steel ASTM A53 Grade A or B.
2" & Under	Schedule 80.
2½" & Over	Standard Weight

FITTINGS

2" & Under	3000 Lb., Socket Welding Ends, Forged Carbon Steel ASTM A105 Grade I or II.
2½" & Over	Standard Weight, Butt-Welding Ends, Wrought Carbon Steel ASTM A234 Grade WPA or WPB.

FLANGES

2" & Under	150 Lb., 1/16" Raised Face, Socket Welding Ends, Forged Carbon Steel ASTM A181 Grade I.
2½" & Over	150 Lb., 1/16" Raised Face, Welding Neck, Forged Carbon Steel ASTM A181 Grade I.

COUPLINGS

2" & Under	3000 LB. Socket Welding Ends, Forged Carbon Steel ASTM A105 Grade I or II.

BOLTS

Machine, Hex Head, Heavy Series, Carbon Steel ASTM A307 Grade B.

NUTS

Hex Nuts, Heavy Series, Semi-Finished, Carbon Steel ASTM A194 Grade 2H.

GASKETS

1/16" Thick, Ring Type, Compressed Asbestos Fiber Composition.

NOTES

1. All Pipe and Fittings Shall be Thoroughly Pickled, Neutralized, Washed and Dried After Fabrication and Coated with Water Soluble Oil. Ends of Pipe shall be Completely Sealed Prior to Shipment.

CHG.	DATE	DESCRIPTION	APPRD.	CHG.	DATE	DESCRIPTION	APPRD.
2	11-13-70	REISSUED - NO CHANGES	ACH				
1	4-20-70	ISSUED FOR BIDS - SPEC 9350	OW	3	10-8-70	REVISED AND REISSUED	RM

APPROVED REW

BY S. Boghosian	MECHANICAL DESIGN STANDARD	SUPERSEDES
DSGNS. K. B.	DESIGN	SUPERSEDED BY
DR. P. Kodani	PIPING SPECIFICATION "J"	SHEET No. / SHEETS
CH. Branson	Department of Engineering	DRAWING NUMBER / CHANGE
O.K. RHS/	PACIFIC GAS AND ELECTRIC COMPANY	047224 / 3
DATE 8-12-68 / SCALE None	SAN FRANCISCO, CAL.	

PRINTED ON DIEPO NO. 1000H CLEARPRINT 11-67

62-1204 (EM 3/63)

DESIGN CONDITIONS
150 PSIG, 500°F

PIPE

2" & Under	Schedule 80, Seamless Carbon Steel ASTM A53 or A106 Grade B Only.
2-1/2" - 24"	Standard Weight, Seamless Carbon Steel ASTM A53 Grade B Only.
26" - 36"	3/8" Nominal Wall Thickness, Electric-Fusion Welded Carbon Steel Pipe ASTM A134, Plate Conforming to ASTM A285 Grade C, Firebox Quality, or A155 Grade KCF 65 Cl.II.

FITTINGS

2" & Under	3000 Lb. Socket Welding Ends, Forged Carbon Steel ASTM A105
2-1/2" & Over	Butt-Welding Ends, Wrought Carbon Steel ASTM A234 Grade WPB. Schedule or Wall Thickness to Match Pipe. 2-1/2" - 24" Seamless, 26" - 36" Welded.

FLANGES

2" & Under	150 Lb., 1/16" Raised Face, Socket Welding Ends, Forged Carbon Steel ASTM A 181 Grade I or II.
2-1/2" & Over	150 Lb. 1/16" Raised Face, Welding Neck, Forged Carbon Steel ASTM A 181 Grade I or II.

BOLTS

Machine, Hex Head, Heavy Series, Semi-Finished, Carbon Steel ASTM A 307 Grade B.

NUTS

Hex Nuts, Heavy Series, Semi-Finished, Carbon Steel ASTM A 194 Grade 2H.

GASKETS

1/16", Flat Ring Type, Compressed Asbestos Fiber Composition, Group I.

CHG.	DATE	DESCRIPTION	APPRD.	CHG.	DATE	DESCRIPTION	APPRD.
7	10-8-71	REDRAWN AND REISSUED	GEW	8	3-7-73	REV. PIPE 26"-36", ADD. NOTE 2 SHEET 2	GEW

APPROVED GEW

BY G. KASCHUBE
DSGN. G. BERNHOFF
DR. G.A.B.
CH. GEB.
O.K. G.A.K.
DATE 10-8-71 SCALE NONE

MECHANICAL DESIGN STANDARD
DESIGN
PIPING SPECIFICATION "K"
Department of Engineering
PACIFIC GAS AND ELECTRIC COMPANY
SAN FRANCISCO, CAL.

SUPERSEDES
SUPERSEDED BY
SHEET No. 1 of 2 SHEETS
DRAWING NUMBER 047225
CHANGE 8

PRINTED ON DIEPO NO. 1000H CLEARPRINT

35 Fig. 8

NOTES:

1. Seamless Carbon Steel ASTM A 106 GR.B Pipe is Acceptable as an Alternate to Welded Pipe in 26"-36" Sizes With PG&E Approval.

2. Slip-on Flanges are Acceptable with Engineers Approval

DESIGN CONDITIONS
405 PSIG, 650°F

PIPE

All Sizes	Seamless Carbon Steel ASTM A106 Grade B.
2" & Under	Schedule 80
2½" - 20"	Standard Weight
24"	Extra Strong

FITTINGS

2" & Under	3000 Lb., Socket Welding Ends, Forged Carbon Steel ASTM A105
2½"-20"	Standard Weight, Butt-Welding Ends, Seamless Carbon Steel ASTM A234 Grade WPB,
24"	Extra Strong, Butt-Welding Ends, Seamless Carbon Steel ASTM A234 Grade WPB.

FLANGES

2" & Under	300 Lb., 1/16" Raised Face, Socket Welding Ends, Ends, Forged Carbon Steel ASTM A181 Grade I or II.
2½" & Over	300 Lb., 1/16" Raised Face, Welding Neck, Forged Carbon Steel ASTM A181 Grade I or II.

BOLTS

Bolt-Stud, Heavy Series, Semi-Finished, Alloy Steel ASTM A193 Grade B7.

NUTS

Hex Nuts, Heavy Series, Semi-Finished, Carbon Steel ASTM A194 Grade 2H.

GASKETS

0.175" Thick, Flexitallic, Style CG.

CHG.	DATE	DESCRIPTION	APPRD.	CHG.	DATE	DESCRIPTION	APPRD.
3	10-8-71	REVISED AND REISSUED	AGW	4	3-7-73	REV. FITTING SPECIFICATION, ADD. 24"	AGW
1	1-5-70	REVISED 24" PIPE SCHEDULE	AGW	2	11-23-70	REISSUED - NO CHANGES	AGW

APPROVED AGW

BY S. Boghosian	MECHANICAL DESIGN STANDARD	SUPERSEDES
DSGN. S.K.B.	DESIGN	SUPERSEDED BY
DR. P. Kodani	PIPING SPECIFICATION "K2"	SHEET NO. SHEETS
CH. Branson	Department of Engineering	DRAWING NUMBER 047227 CHANGE 4
C.K. RHS/EMR	PACIFIC GAS AND ELECTRIC COMPANY	
DATE 8-12-68 / SCALE None	SAN FRANCISCO, CAL.	

DESIGN CONDITIONS
1030 PSIG, 650°F

PIPE

2" & Under	Schedule 80, Seamless Carbon Steel ASTM A106 Grade B.
2½" - 3"	Schedule 40
3½"	Extra Strong
4" - 6"	Schedule 40
8" - 24"	Schedule 60

FITTINGS

2" & Under	3000 Lb., Socket Welding Ends, Forged Carbon Steel ASTM A105 Grade II.
2½" & Over	Butt-Welding Ends, Seamless Carbon Steel ASTM A234 Grade WPB, Schedule or Wall Thickness to Match Pipe,

FLANGES

2" & Under	600 Lb., ¼" Raised Face, Socket Welding Ends, Forged Carbon Steel, ASTM A105 Grade II.
2½" & Over	600 Lb., ¼" Raised Face, Welding Neck, Forged Carbon Steel ASTM A105 Grade II.

BOLTS

Bolt-Stud, Heavy Series, Semi-Finished, Alloy Steel ASTM A193 Grade B7.

NUTS

Hex Nuts, Heavy Series, Semi-Finished, Carbon Steel ASTM A194 Grade 2H.

GASKETS

0.175" Thick, Flexitallic, Style CG.

CHG.	DATE	DESCRIPTION	GM	BY	CH.	APPD.
5	10-8-71	REVISED AND REISSUED		GK	GLG	AGM
4	11-23-70	REISSUED-NO CHANGES		RCB	R.J.L.	AGM
3	4-20-70	ISSUED FOR BIDS - SPEC 9350		ECB	ECB.	AP
2	1-5-70	REVISED & RETYPED		[illegible]		[illegible]
1	3-13-69	REVISED PIPE SCHEDULE		[illegible]		[illegible]

APPROVED BY

SUPV. BY S. Boghosian
DSGN. S.K.B.
DR. P. Kodani
CH. Branson
O.K. RHS
DATE 8-14-68 SCALE None

MECHANICAL DESIGN STANDARD
DESIGN
PIPING SPECIFICATION "X6"
Department of Engineering
PACIFIC GAS AND ELECTRIC COMPANY
SAN FRANCISCO, CALIFORNIA

DRAWING LIST
SUPERSEDES
SUPERSEDED BY
SHEET NO. SHEETS
DRAWING NUMBER 047231 CHANGE 5

35 MIL 1 5

DESIGN CONDITIONS
600 PSIG, 400°F

PIPE

2" & Under	Schedule 80, Seamless Carbon Steel ASTM A106 Grade B.
2½" - 14"	Standard Weight, Seamless Carbon Steel ASTM A106 Grade B.
16" - 20"	Extra Strong, Seamless Carbon Steel ASTM A106 Grade B.
24"	Schedule 40, Seamless Carbon Steel ASTM A106 Grade B.
30" O.D.	0.671" Minimum Wall Thickness, Electric-Fusion Welded Carbon Steel ASTM A155 Grade KCF65, Class II.

FITTINGS

2" & Under	3000 Lb. Socket Welding Ends, Forged Carbon Steel ASTM A105.
2½" & Over	Butt-Welding Ends, Wrought Carbon Steel ASTM A234 Grade WPB. Schedule or Wall Thickness to Match Pipe.

FLANGES

2" & UNDER	300 Lb., 1/16" Raised Face, Socket Welding Ends, Forged Carbon Steel ASTM A181 Grade I or II.
2½" & Over	300 Lb., 1/16" Raised Face, Welding Neck, Forged Carbon Steel ASTM A181 Grade I or II.
5 30"	Applicable Only To Consensate Polishing Sys Piping (DIABLO CANYON). Class 300 Raised Face, Welding Neck, Forged Carbon Steel ASTM A105, Bore To Match 30" Pipe, Design & Dimensions Shall Be Per MSS SP-44.

BOLTS

Machine, Hex Head, Heavy Series, Semi-Finished, Carbon Steel ASTM A307 Grade B.

5 Applicable Only To Condensate Polishing Sys. Piping (DIABLO CANYON). Continuous Thread Stud Bolts, Alloy Steel Per ASTM A193, Grade B7, Coarse Thread Series Per ANSI B1.1, Class 2A Fit For Sizes 1" Diameter And Smaller. 8-Thread Series Class 2A Fit For Larger Sizes, Dimensions Per ANSI B16.5.

NUTS

Hex Nuts, Heavy Series, Semi-Finished, Carbon Steel ASTM A194 Grade 2H.

GASKETS

1/16" Thick, Flat Ring Type, Compressed Asbestos Fiber Composition.

Chg.	Date	Description	Appr.	Chg.	Date	Description	Appr.
5	5-6-80	ADDED: 30" FLANGE & STUD BOLT SPECS FOR CNDS POLISHING SYS PIPING PER DCO-EM-414					
2	11-23-70	REISSUED-NO CHANGES		4	3-7-73	REV. 30" PIPE SPECIFICATION	
1	1-5-70	REV. PIPE SCH. ADD. 2" & UNDER FLANGES		3	10-8-71	REVISED AND REISSUED	

APPROVED

BY S. Boghosian	MECHANICAL DESIGN STANDARD	SUPERSEDES	
DSGN. S.K.B.	DESIGN	SUPERSEDED BY	
DR. P. Kodani	PIPING SPECIFICATION "K12"	SHEET No. 1 OF 1 SHEETS	
CH. Brenson	Department of Engineering	DRAWING NUMBER	CHANGE
O.K. DHS/[illegible]	PACIFIC GAS AND ELECTRIC COMPANY	047237	5
DATE 8-14-68 / SCALE None	SAN FRANCISCO, CAL.		

PRINTED ON DIEPO NO. 9000H CLEARPRINT 11-67

RM INDEXED REV. 5
35 M/Ki Reg.

DESIGN CONDITIONS
600 PSIG, 650°F

PIPE

2" & Under	Schedule 80, Seamless Carbon Steel ASTM A106 Grade B.
2½" - 12"	Standard Weight, Seamless Carbon Steel ASTM A106 Grade B.

FITTINGS

2" & Under	3000 Lb., Socket Welding Ends, Forged Carbon Steel ASTM A105 Grade II.
2½" & Over	Butt-Welding Ends, Wrought Carbon Steel ASTM A234 Grade WPB, Schedule or Wall Thickness to Match Pipe.

FLANGES

2" & Under	600 Lb., ¼" Raised Face, Socket Welding Ends, Forged Carbon Steel ASTM A105 Grade I or II.
2½" & Over	600 Lb., ¼" Raised Face, Welding Neck, Forged Carbon Steel ASTM A105 Grade I or II.

BOLTS

Bolt-Stud, Heavy Series, Semi-Finished, Alloy Steel ASTM A193 Grade B7.

NUTS

Hex Nuts, Heavy Series, Semi-Finished, Carbon Steel ASTM A194 Grade 2H.

GASKETS

0.175" Thick, Flexitallic, Style CG.

APPROVED BY	CHG.	DATE	DESCRIPTION	GM	BY	CH.	APPD.
	5	10-6-71	REVISED AND REISSUED		GK	GLS	
	3	11-23-70	REISSUED-NO CHANGES		RLB		
	1	1-5-70	ADDED 2" & UNDER FLANGES				

SUPV. SYS.	S. Boghosian
DSGN.	S.K.R.
DR.	D. Kodani
CH.	R.L. BRYSON
O.K.	RMS
DATE	7-10-69
SCALE	None

MECHANICAL DESIGN STANDARD
DESIGN
PIPING SPECIFICATION "K13"
Department of Engineering
PACIFIC GAS AND ELECTRIC COMPANY
SAN FRANCISCO, CALIFORNIA

DRAWING LIST
SUPERSEDES
SUPERSEDED BY
SHEET NO. SHEETS
DRAWING NUMBER 047238 CHANGE 3

35 MAR 11 3

DESIGN CONDITIONS
1085 PSIG., 600F

PIPE

2" & Under	Schedule 80, Seamless Carbon Steel ASTM A106 Grade B
2½", 3", 4", 6"	Standard Weight Seamless Carbon Steel ASTM A106 Grade B
3½"	Extra Strong, Seamless Carbon Steel ASTM A106 Grade B
8 - 24"	Schedule 60, Seamless Carbon Steel ASTM A106 Grade B, with Supplementary Requirements S1 - S6.
26" & Larger	Electric-Fusion-Welded Carbon Steel ASTM A155 Grade KCF70 Class 1 with Supplementary Requirements S1 - S4.

26" O.D. 0.851" Min. Wall Thickness
26" I.D. 0.9063" Min. Wall Thickness

30" O.D. 0.972" Min. Wall Thickness

FITTINGS

2" & Under	3000 Lb., Socket Welding Ends, Forged Carbon Steel ASTM A105
2½" - 24"	Butt-Welding Ends, Seamless Carbon Steel ASTM A234 Grade WPB, Schedule to Match Pipe, Long Radius.
26" & Larger	Butt-Welding Ends, Wrought Carbon Steel ASTM A234 Grade WPB With Supplementary Requirements S1 & S2, Wall Thickness to Match or Exceed Minimum Wall Thickness of Pipe. Plate Material ASTM A 515 Grade 70 Seam Welds Fully Radio-Graphed Per ASME Boiler Code Section I.

FLANGES

2" & Under	600 Lb., ¼" Raised Face, Socket Welding Ends, Forged Carbon Steel ASTM A105
2½" & Over	600 Lb., ¼" Raised Face, Welding Neck, Forged Carbon Steel ASTM A105 . Bore to Match Pipe Wall Thickness.

CHG.	DATE	DESCRIPTION	GM	BY	CH.	APPD.
5	3-7-73	REV. FITTINGS 2½"-24" TO SEAMLESS		GKB	VCS.	AGH
4	10-8-71	REVISED AND REISSUED		GK	GLB	AGH
3	11-23-70	REISSUED-NO CHANGES		RLA	RLA	AGH
2	1-5-70	REVISED & RETYPED		LKB		AGH
1	8-28-69	REV. 26" & LARGER PIPE MATERIAL GRADE		LKB	LKB	AGH

APPROVED BY AGH

SUPV. STS. Boghosian
DSGN. S.K.B.
DR. P. Kodani
CH. LKB
O.K. RHS
DATE 8-13-69
SCALE None

MECHANICAL DESIGN STANDARD
DESIGN
PIPING SPECIFICATION "K14"
Department of Engineering
PACIFIC GAS AND ELECTRIC COMPANY
SAN FRANCISCO, CALIFORNIA

DRAWING LIST
SUPERSEDES
SUPERSEDED BY
SHEET NO. 1 2 SHEETS
DRAWING NUMBER 047239
CHANGE 5

35 MM No. 5

BOLTS	Bolt-Stud, Heavy Series, Semi-Finished, Alloy Steel ASTM A193 Grade B7.
NUTS	Hex Nuts, Heavy Series, Semi-Finished, Carbon Steel ASTM A194 Grade 2H.
GASKETS	0.175" Thick, Flexitallic, Style CG.

DESIGN CONDITIONS
1085 PSIG., 600°F

PIPE

2" & Under	Schedule 80, Seamless Carbon Steel ASTM A106 Grade B
2½", 3", 4", 6"	Standard Weight, Seamless Carbon Steel ASTM A106 Grade B
3½"	Extra Strong, Seamless Carbon Steel ASTM A106 Grade B
8 - 24"	Schedule 60, Seamless Carbon Steel ASTM A106 Grade B with Supplementary Requirements S1 - S6.
26" I.D.	1.002" Minimum Wall Thickness, Electric-Fusion-Welded Carbon Steel SA516 Grade 70 Plate, Fully Radiographed Seam Welds

FITTINGS

2" & Under	3000 Lb., Socket Welding Ends, Forged Carbon Steel ASTM A105 Grade II.
2½" - 24"	Butt-Welding Ends, Seamless Carbon Steel, Material and Schedule to Match Pipe.
26" I.D.	Butt-Welding Ends, Made from SA516 Grade 70 to ASTM A234 Requirements with Supplementary Requirements S1 & S2, Wall Thickness to Match or Exceed Minimum Wall Thickness of Pipe, Fully Radiographed Seam Welds

FLANGES

2" & Under	600 Lb., ¼" Raised Face, Socket Welding Ends, Forged Carbon Steel ASTM A105 Grade II.
2½" & Over	600 Lb., ¼" Raised Face, Welding Neck, Forged Carbon Steel ASTM A105 Grade II. Bore to Match Pipe Wall Thickness.

35 M/M Neg.

CHG.	DATE	DESCRIPTION	GM	BY	CH.	APPD.
5	11-23-70	REISSUED - NO CHANGES		RLB		
4	1-5-70	REVISED & RETYPED		LKB		
3	8-28-69	REV. 26" I.D. PIPE WALL THICKNESS		LKB		
2	6-3-69	REV. PIPE & FITTINGS ; ADDED NOTE		LKB		
1	10-8-71	REVISED AND REISSUED		GK		

APPROVED BY

SUPV. EYS. Boghosian
DSGN. S.K.B.
DR. P. Kodani
CH. Branson
O.K. RHS/GHM
DATE 9-19-68
SCALE None

MECHANICAL DESIGN STANDARD
DESIGN
PIPING SPECIFICATION "X15"
Department of Engineering
PACIFIC GAS AND ELECTRIC COMPANY
SAN FRANCISCO, CALIFORNIA

DRAWING LIST
SUPERSEDES
SUPERSEDED BY
SHEET NO. 1 2 SHEETS
DRAWING NUMBER 047240
CHANGE 6

PRINTED ON DIEPO NO. 1000H CLEARPRINT 8-66

BOLTS	Bolt-Stud, Heavy Series, Semi-Finished, Alloy Steel ASTM A193 Grade B7.
NUTS	Hex Nuts, Heavy Series, Semi-Finished, Carbon Steel ASTM A194 Grade 2H.
GASKETS	0.175" Thick, Flexitallic, Style CG, [illegible]

NOTE:

1. Main Steam from Steam Generator to Isolation Valves - See [illegible] for Additional Details of Welding, [illegible], NDT, etc.

DESIGN CONDITIONS
1415 PSIG, 450°F

PIPE

2" & Under	Schedule 80, Seamless Carbon Steel ASTM A106 Grade B
2½" - 18"	Schedule 80, Seamless Carbon Steel ASTM A106 Grade B, with Supplementary Requirements S1-S6 for Pipe 8" & larger.
24"	Schedule 100, Seamless Carbon Steel ASTM A106 Grade B with Supplementary Requirements S1 - S6.
30" O.D.	1.240" Minimum Wall Thickness, Electric-Fusion Welded Carbon Steel ASTM A155 Class 1, Grade KCF 70 Plate with Supplementary Requirements S1 - S4.

FITTINGS

2" & Under	3000 Lb. Socket Welding Ends, Forged Carbon Steel ASTM A105
2½" - 18"	Schedule 80, Butt-Welding Ends, Wrought Carbon Steel ASTM A234 Grade WPB with Supplementary Requirements S1 & S2 Except that Plate Material Shall Be ASTM A516 Grade 70.
24"	Schedule 100, Butt-Welding Ends, Wrought Carbon Steel ASTM A234 Grade WPB with Supplementary Requirements S1 & S2 Except that Plate Material Shall be ASTM A516 Grade 70.
30"	Wall Thickness to Match or Exceed Minimum Wall Thickness of Pipe, Butt-Welding Ends, Wrought Carbon Steel ASTM A234 Grade WPB with Supplementary Requirements S1 & S2 Except that Plate Material Shall be ASTM A516 Grade 70.

FLANGES

2" & Under	1500 Lb., ¼" Raised Face, Socket Welding Ends, Forged Carbon Steel ASTM A105
2½" & Over	900 Lb., ¼" Raised Face, Welding Neck, Forged Carbon Steel ASTM A105

APPROVED BY	CHG.	DATE	DESCRIPTION	GM	BY	CH.	APPD
	3	10-8-71	REVISED AND REISSUED		GK	GOS	RGI
AGW	2	11-23-70	REISSUED - NO CHANGES		RLB	WJS	RGI
	1	1-5-70	REVISED & RETYPED		LEH		RGK

SUPV. BY S. Boghosian
DSGN. S.K.B.
DR. P. Kodani
CH. Branson
O.K. RHS/GHO
DATE 9-19-68 SCALE None

MECHANICAL DESIGN STANDARD
DESIGN
PIPING SPECIFICATION "K16"
Department of Engineering
PACIFIC GAS AND ELECTRIC COMPANY
SAN FRANCISCO, CALIFORNIA

DRAWING LIST
SUPERSEDES
SUPERSEDED BY
SHEET NO. 1 2 SHEETS
DRAWING NUMBER 047241
CHANGE 3

PRINTED ON DIEPO NO. 1000H CLEARPRINT 8-69

BOLTS	Bolt-Stud, Heavy Series, Semi-Finished, Alloy Steel ASTM A193 Grade B7.
NUTS	Hex Nuts, Heavy Series, Semi-Finished, Carbon Steel ASTM A194 Grade 2H.
GASKETS	0.175" Thick, Flexitallic, Style CG.

NOTE:

1. Feedwater from steam generators to isolation valves for New Boiler Code Section III.

2. Refer to P. G. & E. Spec. [illegible] for details of welds [illegible] for use of Phosphater Spacer.

62-1804 (2500 8-67)

DESIGN CONDITIONS
2500 PSIG, 650°F

PIPE

½" - 12" — Schedule 160, Seamless Carbon Steel ASTM A106 Grade B. with Supplementary Requirements S1 - S6. For Pipe 8" & Larger.

FITTINGS

2" & Under — 6000 Lb. Socket Welding Ends, Forged Carbon Steel ASTM A105 Grade II.

2½" - 12" — Schedule 160, Butt-Welding Ends, Wrought Carbon Steel ASTM A234 Grade WPB. with Supplementary Requirements S1 & S2.

FLANGES

2" & Under — 1500 Lb., ¼" Raised Face, Socket Welding Ends, Forged Carbon Steel ASTM A105 Grade II, Bore to Match Schedule 160 Pipe.

2½" - 12" — 1500 Lb., ¼" Raised Face, Welding Neck, Forged Carbon Steel ASTM A105 Grade II, Bore to Match Schedule 160 Pipe.

BOLTS — Bolt-Stud, Heavy Series, Semi-Finished, Alloy Steel ASTM A193 Grade B7.

NUTS — Hex Nuts, Heavy Series, Semi-Finished, Carbon Steel ASTM A194 Grade 2H.

GASKETS — 0.175" Thick, Flexitallic, Style CG.

APPROVED BY	CHG.	DATE	DESCRIPTION	GM	BY	CH.	APPD.
	3	10-8-71	REVISED AND REISSUED		GK		
	2	11-23-70	REISSUED - NO CHANGES		RLB		
	1	1-5-70	REV. PIPE SIZE & ADDED SUPPLEMENTARY REQT.		LKB		

SUPV. BY S. Boghosian
DSGN. S.K.B.
DR. P. Kodani
CH. Branson
O.K. RHS
DATE 8-14-68 SCALE None

MECHANICAL DESIGN STANDARD
DESIGN
PIPING SPECIFICATION "K17"
Department of Engineering
PACIFIC GAS AND ELECTRIC COMPANY
SAN FRANCISCO, CALIFORNIA

DRAWING LIST
SUPERSEDES
SUPERSEDED BY
SHEET NO. SHEETS
DRAWING NUMBER 047242 CHANGE 3

PRINTED ON DIXPO NO. 1000H CLEARPRINT 8-67

DESIGN CONDITIONS
2500 PSIG, 650°F

PIPE

1" & Under — Seamless Stainless Steel Tubing ASTM A213 Grade TP 316.

Actual O.D.	Wall Thickness
1/4"	0.065"
3/8"	0.065"
1/2"	0.065"
3/4"	0.095"
1"	0.188"

FITTINGS

All Sizes

Imperial "Braze-Seal" tubing fittings
ASTM A182 Gr F316 (SEE NOTE BELOW) OR
A479 Type F316

Imperial "Hi-Seal" tubing fittings
ASTM A182 Gr F316 with (SEE NOTE BELOW)
ASTM A564 Type 630 sleeves (17-4 PH)

Swagelok tubing fittings ASTM A269 Type 316 ⚠

Socket Weld fittings
ASTM A403 Gr WP316

No Flares Permitted

NOTE ASTM A 403 GR WP316 MAY BE SUBSTITUTED FOR ASTM A182 GRF316 MATERIAL FOR FITTINGS

NEW INDENTED REV. 11

CHG.	DATE	DESCRIPTION	DM	ST	CH.
7	10-29-79	DELETED NOTES 1 & 2 & ADDED TO 049021		RY	MGG
6	9-25-73	ADDED (IMPERIAL HI-SEAL) TO FITTINGS & NOTES 1 & 2		RY	MGG
5	3-29-73	REVISED FITTING SPECIFICATION		GAS	[illegible]
11	2-28-80	ADDED NOTE ABOVE PER DCO-E-M-475		RJB	MGG
10	3-1-79	ADDED "BRAZE-SEAL SPEC'S		RY	MGG
9	9-30-74	ADDED NOTE ABOVE FERECO MC76		LDT	RY
8	9-6-74	CHANGED NOTE AND FITTINGS INFORMATION		JGS	RY

APPROVED BY

SUPV. BY S. Boghosian
DSGN. S.K.B.
DR. F. Kodani
CH. Branson
O.K. [illegible]
DATE 8-14-68 SCALE None

MECHANICAL DESIGN STANDARD
DESIGN
PIPING SPECIFICATION "S"
Department of Engineering
PACIFIC GAS AND ELECTRIC COMPANY
SAN FRANCISCO, CALIFORNIA

DRAWING LIST
SUPERSEDES
SUPERSEDED BY
SHEET NO. 1 OF 1
DRAWING NUMBER 047282 CHANGE 11

PRINTED ON DUPO NO. 1000N CLEARPRINT D-67

DESIGN CONDITIONS
700 PSIG, 400°F

PIPE

2" & Under — Schedule 40S, Seamless Stainless Steel ASTM A312 Grade TP 304.

2½" - 8" — Schedule 40S, Seamless Stainless Steel ASTM A312 Grade TP 304 with Supplementary Requirement S1.

10" - 12" — ~~Schedule 40S, Seamless Stainless Steel~~ ASTM A376 Grade TP 304 with Supplementary Requirement S1 or Electric Fusion Welded ASTM A358 Grade 304 with Supplementary Requirements S1 & S2.

14" — Schedule 40, Seamless Stainless Steel (Same as Above)

FITTINGS

2" & Under — 3000 Lb. Socket Welding Ends, Forged Stainless Steel ASTM A182 Grade F304.

2½" - 14" — Schedule to Match Pipe, Butt-Welding Ends, Stainless Steel ASTM A403 Grade WP 304 with Supplementary Requirements S1 & S2.

FLANGES

2" & Under — 600 Lb., ¼" Raised Face, Socket Welding Ends, Forged Stainless Steel ASTM A182 Grade F304.

2-1/2" & Over — 600 Lb., ¼" Raised Face, Welding Neck, Forged Stainless Steel ASTM A182 Grade F304. Bore to Match Pipe Wall Thickness.

CHG.	DATE	DESCRIPTION	GM	BY	CH.	APPD.
7	3-7-73	REV. BOLT SPEC.		GAD	KCS	
6	10-8-71	REVISED AND REISSUED		GK		
5	11-23-70	REISSUED - NO CHANGES		RLB		
4	1-5-70	REV. PIPE & FITTINGS WALL THICKNESS, DELETED NOTE				
3	10-24-69	REV. BOLTS & NUTS MATL SH. 2				
2	8-28-69	ADDED NOTES 1 & 2; REV. PIPE WALL THICKNESS				
1	10-30-68	REVISED DES. COND., MATL FOR 12"-14" PIPE & FITTINGS				

APPROVED BY

SUPV. B.G. Boghosian
DSGN. S.K.B.
DR. P. Kodani
CH. Bronson
O.K. RHS/BM
DATE 8-14-68 SCALE None

MECHANICAL DESIGN STANDARD
DESIGN
PIPING SPECIFICATION "S1"
Department of Engineering
PACIFIC GAS AND ELECTRIC COMPANY
SAN FRANCISCO, CALIFORNIA

DRAWING LIST
SUPERSEDES
SUPERSEDED BY
SHEET NO. 1 2 SHEETS
DRAWING NUMBER 047283 CHANGE 7

35 MM 11 Mar. 1

BOLTS	Bolt-Stud, Stainless Steel, ASTM A193 Grade B8.
NUTS	Hex Nuts, Heavy Series, Semi-Finished, Stainless Steel ASTM A194 Grade 8.
GASKETS	0.175" Thick, Flexitallic, Style CG.

NOTES:

62-1804 (2300 8-67)

DESIGN CONDITIONS
150 PSIG, 500°F
255 PSIG, 150°F

PIPE

2" & Under	Schedule 40S, Seamless Stainless Steel ASTM A312 Grade TP 304.
2½" -6"	Schedule 10S, Seamless Stainless Steel ASTM A312 Grade TP 304.
8" -	Schedule 10S, Welded Stainless Steel ASTM A358 Grade TP 304.
10"-24"	¼" Nominal Wall Thickness, Welded Stainless Steel ASTM-A358 Grade TP 304

FITTINGS

2" & Under	3000 Lb. Socket Welding Ends, Forged Stainless Steel ASTM A182 Grade F304, Bored to Match Schedule 40S. Pipe.
2½" - 8"	Schedule 10S, Butt-Welding Ends, Seamless Stainless Steel ASTM A403 Grade WP304.
10" - 24"	1/4" Wall Thickness, Butt-Welding Ends, Welded Stainless Steel ASTM A403 Grade WP 304.

FLANGES

2" & Under	150 Lb. 1/16" Raised Face, Socket Welding Ends, Forged Stainless Steel ASTM A182 Grade F304, Bored to Match Schedule 40S. Pipe.
2½" & Over	150 Lb., 1/16" Raised Face, Welding Neck, Forged Stainless Steel ASTM A182 Grade F304, Bored to Match Pipe Wall Thickness.

CHG.	DATE	DESCRIPTION	GM	BY	CH.	APPD.
6	3-7-73	REV. DESIGN COND. TO 255 PSIG AT 150°F, REV. PIPE SPEC.		GAB	RCS	
5	10-8-71	REVISED AND REISSUED		GK	GLB	
4	11-23-70	REISSUED - NO CHANGES		RLB		
3	1-5-70	ADDED "NOMINAL" TO 14"-24" PIPE WALL THICKNESS		AKB		
2	10-24-69	REV. BOLTS & NUTS MATL. SH. 2		SHH	SHH	
1	8-28-69	REV. PIPE ASTM SPEC. & SCHEDULE, REV. NOTE 2		AKB	AKB	

APPROVED BY

SUPV. BY S. Boghosian
DSGN. S.K.B.
DR. P. Kodani
CH. Branson
O.K. RHS/BRP
DATE 8-14-68
SCALE None

MECHANICAL DESIGN STANDARD
DESIGN
PIPING SPECIFICATION "S2"
Department of Engineering
PACIFIC GAS AND ELECTRIC COMPANY
SAN FRANCISCO, CALIFORNIA

DRAWING LIST
SUPERSEDES
SUPERSEDED BY
SHEET NO. 1 of 2 SHEETS
DRAWING NUMBER 047284
CHANGE 6

35 MIN

BOLTS	Machine, Hex Head, Stainless Steel ASTM A193 Grade B8.
NUTS	Hex Nuts, Heavy Series, Semi-Finished, Stainless Steel ASTM A194 Grade 8.
GASKETS	0.175" Thick, Flexitallic, Style CG.

NOTES:

1. No Threading is Allowed for Material in This Spec.
2. Additional Supplementary Testing Required on Pipe and Fittings as Required by ANS B31.7 Class Applicable to a Particular System Must Be Performed.
3. No Bending is Allowed for This Spec.

DESIGN CONDITIONS
370 PSIG, 650°F
495 PSIG, 300°F
550 PSIG, 200°F

PIPE

2" & Under — Schedule 40S, Seamless Stainless Steel ASTM A312 Grade TP 304.

2½" - 12" — Schedule 40S, Seamless Stainless Steel ASTM A312 Grade TP 304 with Supplementary Requirement S1 or Welded Stainless Steel ASTM A358 Grade 304 with Supplementary Requirement S1 & S2.

FITTINGS

2" & Under — 3000 Lb. Socket Welding Ends, Forged Stainless Steel ASTM A182 Grade F304.

2½" & Over — Schedule 40S, Butt-Welding Ends, Seamless or Welded Stainless Steel ASTM A403 Grade WP 304 with Supplementary Requirements S1 & S2.

FLANGES

2" & Under — 300 Lb., 1/16" Raised Face, Socket Welding Ends, Forged Stainless Steel ASTM A182 Grade F304.

2½" - 12" — 300 Lb., 1/16" Raised Face, Welding Neck, Forged Stainless Steel ASTM A182 Grade F304.

BOLTS

Hex Head Bolts, Heavy Series Semi-Finished, Stainless Steel ASTM A193 Grade B8.

NUTS

Hex Nuts, Heavy Series, Semi-Finished, Stainless Steel ASTM A194 Grade 8.

GASKETS

0.175" Thick, Flexitallic, Style CG.

CHG.	DATE	DESCRIPTION	GM	BY	CH.	APPD.
7	3-7-73	REVISED BOLT SPEC.		GKD		
6	10-8-71	REVISED AND REISSUED		GK		
5	11-23-70	REISSUED - NO CHANGES		RLB		
4	1-6-70	REV. PIPE MATERIAL DESCRIPTION		LKB		
3	10-28-69	REV. BOLTS & NUTS MATL.				
2	8-28-69	ADDED PIPE INFO; REV. FLG MATL GRADE		LKB		
1	4-23-69	ADDED DESIGN CONDITION & REV. FLANGE MATL.		LKB		

APPROVED BY

SUPV. BY S. Boghosian
DSGN. S K B
DR. P. Kodani
CH. Brennan
O.K. RHS/GHD
DATE 8-14-68
SCALE None

MECHANICAL DESIGN STANDARD
DESIGN
PIPING SPECIFICATION "S3"
Department of Engineering
PACIFIC GAS AND ELECTRIC COMPANY
SAN FRANCISCO, CALIFORNIA

DRAWING LIST
SUPERSEDES
SUPERSEDED BY
SHEET NO. SHEETS
DRAWING NUMBER 047285
CHANGE 7

35 MM 7

DESIGN CONDITIONS
1400 PSIG, 650°F
1500 PSIG, 350°F
1750 PSIG, 200°F

PIPE

½" - 2"	Schedule 80S, Seamless Stainless Steel ASTM A312 Grade TP 304.
2½" - 6"	Schedule 80S, Seamless Stainless Steel ASTM A312 Grade TP 304. with Supplementary Requirement S1.
8"-16"	Schedule 100, Seamless Stainless Steel ASTM A312 Grade TP 304 with Supplementary Requirement S1 or Welded Stainless Steel ASTM A358. Grade TP 304 with Supplementary Requirements S1 & S2.

FITTINGS

2" & Under	3000 Lb. Socket Welding Ends, Forged Stainless Steel ASTM A182 Grade F304.
2½" - 6"	Schedule 80S, Butt-Welding Ends, Seamless Stainless Steel ASTM A403 Grade WP 304 with Supplementary Requirements S1 & S2.
8"-16"	Schedule 100, Butt-Welding Ends, Seamless Stainless Steel ASTM A403 Grade WP 304 with Supplementary Requirements S1 & S2.

FLANGES

2" & Under	1500 Lb. 1/4" Raised Face, Socket Welding Ends, Forged Stainless Steel ASTM A182 Grade F304.
2½" - 16"	1500 Lb., 1/4" Raised Face, Welding Neck, Forged Stainless Steel ASTM A182 Grade F304, Bored to Match Pipe Wall Thickness.

CHG.	DATE	DESCRIPTION	GM	BY	CH.	APPD.
6	3-7-73	REVISED BOLT SPEC.		GAB	KGS.	HGW
5	10-8-71	REVISED AND REISSUED		GK	GLB	HGW
4	11-23-70	REISSUED - NO CHANGES		RLB	GLB	HGW
3	1-5-70	REV. 8"-16" PIPE & FITTINGS SCH.: ADD NOTES		LKB		HGW
2	10-28-69	REV. BOLTS & NUTS MATL. SH. 2		GAB	GAB	HGW
1	8-28-69	REV. DESIGN COND., PIPE SIZES & MATL. AND FLG. RATING		LKB	LKB	HGW

APPROVED BY HGW

SUPV. BY S. Boghosian
DSGN. S.K.B.
DR. P. Kodani
CH. Granson
O.K. RHS/GTM
DATE 8-14-68
SCALE None

MECHANICAL DESIGN STANDARD
DESIGN
PIPING SPECIFICATION "S5"
Department of Engineering
PACIFIC GAS AND ELECTRIC COMPANY
SAN FRANCISCO, CALIFORNIA

DRAWING LIST
SUPERSEDES
SUPERSEDED BY
SHEET NO. 1 2 SHEETS
DRAWING NUMBER 047287
CHANGE 6

BOLTS	Bolt-Stud, Stainless Steel ASTM A193 Grade B8.
NUTS	Hex Nuts, Heavy Series, Semi-Finished, Stainless Steel ASTM A194 Grade 8.
GASKETS	0.175" Thick, Flexitallic, Style CG.

NOTES:

1. No bending allowance is included in these nominal wall thicknesses, any piping bent must not be less than minimum listed wall thickness for that Schedule Pipe After Bending.
2. 900# forged stainless steel ASTM A182 Grade F316 flanges may be used instead of 1500# ASTM A182 Grade F304 called out above.

GX-1804 (3000 8/68)

DESIGN CONDITIONS
2485 PSIG, 680°F
2510 PSIG, 650°F
2800 PSIG, 200°F

PIPE

2" & Under	Schedule 160, Seamless Stainless Steel ASTM A376 Grade TP 304.
2½" & Over	Seamless Stainless Steel ASTM A376.
2½" - 3"	Schedule 160, Grade TP304 with Supplementary Requirements S1 & S3.
4"	Schedule 120, Grade TP 316 With Supplementary Requirements S1 & S3.
6"	Schedule 160, Grade TP 316 with Supplementary Requirements S1 & S3.
8" - 10"	Schedule 140, Grade TP 316 With Supplementary Requirements S1, S2 & S3.
12" - 16"	Schedule 160, Grade TP 316 With Supplementary Requirements S1, S2 & S3.

Supplementary Requirements S1, S2 & S3 to be Performed on One End Each Length.

FITTINGS

2" & Under	6000 Lb., Socket Welding Ends, Forged Stainless Steel ASTM A182 Grade F304.
2½" - 16"	Butt-Welding Ends, Seamless Stainless Steel ASTM A403 with Supplementary Requirements S1, S2, & S4, Grade and Schedule to Match Pipe.

FLANGES

2" & Under	1500 Lb., 1/4" Raised Face, Socket Welding Ends, Forged Stainless Steel ASTM A182 Grade F316. Bored to Match Pipe.
2½" - 16"	1500 Lb., 1/4" Raised Face, Welding Neck, Forged Stainless Steel ASTM A182 Grade F316, Bored to Match Pipe Schedule.

35 M/M Neg. 7

CHG.	DATE	DESCRIPTION	GM	BY	CH.	APPD.
7	3-7-73	REV. SUPPL. REQMNT FOR 6" PIPE, REV. BOLT SPEC.		GAB	KCS.	
6	10-8-71	REVISED AND REISSUED		GK	GAB	
5	11-23-70	REISSUED. NO CHANGES		RLB		
4	13-31-70	REVISED & REDRAWN		LKB	KD	
3	1-5-70	ADDED SUPPLEMENTARY REQTS TO PIPE & FITTINGS		LKB		

APPROVED BY

SUPV. BY S. Boghosian
DSGN. S.K.B.
DR. P. Kodani
CH.
O.K. RHS
DATE 3-5-70
SCALE None

MECHANICAL DESIGN STANDARD
DESIGN
PIPING SPECIFICATION "S6"
Department of Engineering
PACIFIC GAS AND ELECTRIC COMPANY
SAN FRANCISCO, CALIFORNIA

DRAWING LIST
SUPERSEDES
SUPERSEDED BY
SHEET NO. 1 2 SHEETS
DRAWING NUMBER 047288
CHANGE 7

PRINTED ON DIEPO NO. 1000H CLEARPRINT 3-69

BOLTS	Bolt-Stud, Stainless Steel ASTM A193 Grade B8.
NUTS	Hex Nuts, Heavy Series, Semi-Finished, Stainless Steel ASTM A194 Grade 8.
GASKETS	0.175" Thick, Flexitallic, Style CG.

NOTES:

1. Pipe & Fittings on this Specification, where required by ANS B31.7 Class Applicable for the Piping System Involved, Shall Receive the Additional Volumetric Analysis Required.

62-1204 (2200 8-67)

DESIGN CONDITIONS
50 PSIG, 100°F

PIPE
2" & Under — Schedule 10S, Seamless Stainless Steel ASTM A312 Grade TP 316.

FITTINGS
2" & Under — 3000 LB., Socket Welding Ends, Forged Stainless Steel ASTM A182 Grade F316.

FLANGES
2" & Under — 150 LB., Raised Face, Socket Welding Ends, Forged Stainless Steel ASTM A182 Grade F316 [illegible].

BOLTS — Bolts, Hex Head Stainless Steel ASTM A193 Grade B8.

NUTS — Hex Nuts, Heavy Series, Semi-Finished, Stainless Steel ASTM A194 Grade 8.

GASKETS — 1/16" Thick, Johns-Manville - JM Style 86A or Approved Equivalent.

NOTES
1. Used for Acid Service
2. No Bending is Allowed for this Spec.

CHG.	DATE	DESCRIPTION	GM	BY	CH.	APPD.
3	5-7-73	REVISED BOLT SPEC.		GAS	RCL	
2	10-8-71	REVISED AND REISSUED		GR	GEO	
1	11-23-70	CORRECTED TO DATE		RLB		

APPROVED BY

SUPV. BY S. BOGHOSIAN
DSGN. S.K.B.
DR. STD.
CH.
O.K.
DATE 10-8-70
SCALE NONE

MECHANICAL DESIGN STANDARD
DESIGN
PIPING SPECIFICATION "S8"
DEPARTMENT OF ENGINEERING
PACIFIC GAS AND ELECTRIC COMPANY
SAN FRANCISCO, CALIFORNIA

DRAWING LIST
SUPERSEDES
SUPERSEDED BY
SHEET NO. | SHEETS
DRAWING NUMBER 047290 | CHANGE 3

PIPE BASE MATERIAL				SERVICE	PIPING MATERIAL DESIGNATION
Carbon steel, polypropylene lined				Corrosive fluids	F1
DESIGN CONDITIONS				NOMINAL SIZE RANGE	
PRESS. (PSIG)		TEMP. (°F)		8" and under	
MAX.	MIN.	MAX.	MIN.		
250	Vacuum	200*	0	INSTALLATION	
				Exposed (indoor and outdoor)	

*Decrease rating in accordance with the requirements of Note 1, Sheet 3.

PIPE

All Sizes: Carbon steel, polypropylene lined internally, manufactured in flanged sections of maximum uniform length, or cut to size only to suit specific requirements.

Each section ends shall be factory flanged and lined. Pipelining material shall be flared or molded over faces of flanges to form a gasketless jointing monolithic section liner.

Field operations shall include possibility of pipe cutting and flanging, and flaring or molding of liner.

Materials and construction

1. Barrel:

Made of the following factory bonded elements:

a. Casing - Seamless or welded, Standard weight, carbon steel pipe per ASTM A53, Grade A or B, or A120. Plain or threaded ends per manufacturer's flanging requirements.

b. Liner - Seamless Tubular extrusion of virgin polypropylene resin per ASTM D 2146, Type I or II tightly bonded to casing per manufacturer's method.

Minimum wall thickness of liner shall be:

.125" for pipes smaller than 1 1/2" nominal size.
.150" for pipes 1 1/2" to 3" incl. nominal size.
.200" for pipes larger than 3" nominal size.

APPROVED BY	REV.	DATE	DESCRIPTION	GM	DWN.	CHKD.	SUPV.	APVD
	1	5-6-80	APPROVED FOR DESIGN	190270	T.O.	MGG	WWD	
	01	3-26-79	ISSUED FOR BID SPEC. 5677					

GM 190270
SUPV. W. W. DODSON
DSGN. ALBITO
DWN ~
CHKD. M. GUZMAN
O.K. OH
DATE 3-19-79
SCALE ~

MECHANICAL-PIPING
MATERIAL SPECIFICATION "F1"
CONDENSATE POLISHING DEMINERALIZER SYSTEM
DIABLO CANYON POWER PLANT, UNIT 1 & 2
DEPARTMENT OF ENGINEERING
PACIFIC GAS AND ELECTRIC COMPANY
SAN FRANCISCO, CALIFORNIA

B.M.
DWG. LIST
SUPSDS
SUPSD BY
SHEET NO. 1 OF 3 SHEETS
1058863 REV. 1
MICROFILM 1

RM INDEXED REV. 1

2. Flanges:

a. Flange - Threaded or slip-on, ANSI Class 150, flat face, forged carbon steel per ASTM A105. Dimensions per ANSI B 16.5.

b. Liner Facing - Pipe liner ends shall be flared or molded over face of flanges to form stress free raised pattern joint facings of even thickness. Facings shall not extend beyond edge of flange bolt holes. Liner facing thicknesses shall not be less than those given for preceding barrel liners.

FITTINGS

All Sizes: Flanged ductile iron, polypropylene lined and faced.

Materials and construction

Made of the following factory bonded elements:

a. Castings - Ductile iron per ASTM A395 with integral, plain face flanges. Drilling and Dimensions per ANSI A21.10 or B 16.1 (ANSI Class 125). Back or spot faced bolt holes.

b. Liner - Injection molding of virgin polypropylene resin per ASTM D2146 Type I or II.

Internal liner shall be tightly bonded to castings and extend over face of flanges to form stress free raised pattern joint facings of even thickness.

Facings shall not extend beyond edge of flange bolt holes. Liner and facing thicknesses shall not be less than those given for preceding barrel liners.

BOLTS

All Sizes: Machine, hex. head, heavy series, semi-finished, carbon steel, per ASTM A307, Grade B, Coarse thread series per ANSI B 1.1, Class 2A fit. Galvanized, cadmium or zinc plated.

NUTS

All Sizes: Hexagon, heavy series, semi-finished, carbon steel, per ASTM A194, Grade 2H, coarse thread series per ANSI B 1.1, Class 2B fit. Galvanized, cadmium or zinc plated.

SPACERS

All Sizes: Solid polypropylene, ring type, 1/4" min. thickness, flat, single or double taper style.

- Flat spacers shall be used as gaskets when mating lined flanges with unlined or dissimilarly lined flanges.
- Tappered spacers shall be used for directional changes where standard fittings are not suitable to angular requirements (small angles).

BRANCH CONNECTIONS

All Sizes: Fittings shall be used for all branch connections.

NOTES:

1. Maximum temperature rating of piping shown in Design Conditions, sheet 1, is subject to decrease depending on the nature of the fluid(s) conveyed. Manufacturers or their Chemical Resistance Charts shall be consulted in all cases to establish maximum temperature ratings for specific fluid(s).
2. Piping shall be installed as shop fabricated only. There shall be no field operation detrimental to liner's integrity (Welding, bending, drilling, tapping, reaming, cutting, etc.).
3. Installation of piping, field operations and bolting torques shall be per manufacturers' recommendations.

COMMERCIAL REFERENCES

Peabody Doré Company
P.O. Box 42081
Houston, Texas 77042

Plastic Lined Piping Systems (Polydor E-5000)

Dow Chemical U.S.A.
Plastic Lined Piping Products
Drawer H
Walnut Creek, California 94596

Dow Plastic Lined Piping Products (PPL)

S06101

THICKNESS REQUIRED				
NOM. PIPE SIZE \ CLASS	III	IV	V	VI
BELOW 2"	1"	1½"	1½"	2½"
2"				
2½"				
3"			2"	3"
4"				
6"				3½"
8"	1½"			
10"				
12"				
14"			2½"	
16"				
18"	2"	2"		4"
20"				
24"				
28"				
30"				
36"				

CLASS	TEMP. RANGE (°F)
I	SEE NOTE 1
III	151 – 400 (SEE NOTE 5)
IV	401 – 524
V	525 – 675
VI	676 – 1100
SPL	SEE NOTE 2

NOTES:

1) FOR CLASS I, LOW TEMPERATURE INSULATION SHALL BE USED. FOR CLASSES III, IV V AND VI, HIGH TEMPERATURE MASS INSULATION SHALL BE USED THROUGHOUT. FOR INSULATION MATERIAL SPECIFICATION SEE P.G.&E. SPEC. 8737.
2) THE USAGE OF SPECIAL INSULATION IS TO FACILITATE THE PERFORMING OF THE INSERVICE INSPECTION REQUIREMENTS OF SECTION XI OF ASME BOILER AND PRESSURE VESSEL CODE. THE EXTENT OF THE INSERVICE INSPECTION IS SHOWN ON P&I 102028. FOR SPECIAL INSULATION MATERIAL SPECIFICATION SEE P.G.&E. SPEC. 8748
3) FOR INDIVIDUAL PIPE INSULATION CLASS SEE LINE DESIGNATION TABLE (DWG 102040).
4) TYPICAL LINE DESIGNATION WITH INSULATION CLASS SYMBOLS AS SHOWN ON DWGS.

INSULATION CLASS

1 | K2 | 153 | B III

5) CLASS III INSULATION SHOWN ON THIS ISSUE INCLUDES CLASS II INSULATION SHOWN ON PREVIOUS ISSUE OF THIS DWG.
6) THE LETTER "P" FOLLOWING AN INSULATION CLASS DENOTES INSULATION FOR PERSONNEL PROTECTION ONLY I.E. III P, IV P, ETC. PERSONNEL PROTECTION INSULATION SHALL BE INSTALLED ON ALL SYSTEMS WITH FLUID TEMPERATURE 151°F OR HIGHER, WHETHER OR NOT INSULATION IS REQUIRED FOR THE PRESERVATION OF HEAT, AS DETAILED BELOW:

A. HORIZONTAL RUNS: ALL PIPING 8 FT. OR LESS FROM PIPE CENTER LINE TO FLOORS, DECKING PLATFORMS, STAIRWAY OR OTHER NORMAL STANDING, WALKING OR CLIMBING LOCATIONS SHALL BE INSULATED. THE INSULATION SHALL BE RUN 3 FT. FROM HAND RAIL.

B. VERTICAL RUNS: ALL PIPING SHALL BE INSULATED TO A POINT 8 FT. ABOVE THE FLOOR, DECKING PLATFORM, STAIRWAY OR ANY OTHER NORMAL STANDING, WALKING OR CLIMBING LOCATION. THIS INCLUDES ALL PIPING WITHIN A HORIZONTAL DISTANCE OF 3 FT. FROM HAND RAIL.

THICKNESS OF THIS INSULATION IS ESTABLISHED ACCORDING TO LINE TEMPERATURE AS PER CLASSES SHOWN ON "THICKNESS REQUIRED" TABLE.

THE FOLLOWING SKETCH IS A TYPICAL SECTION TO ILLUSTRATE AREAS DESCRIBED ON PARAGRAPHS "A" AND "B".

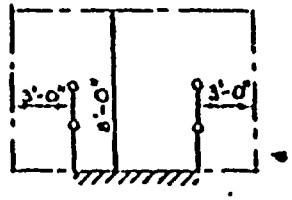

D. V. KELLY No. 9269 MECHANICAL STATE OF CALIFORNIA

COAST VALLEYS DIVISION

UNITS 1 & 2

REV.	DATE	DESCRIPTION	CH	BY	CH.	APPD
3	5-13-71	ISSUED FOR BIDS SPEC 8737		BV	KCB	
2	11-17-71	REVISED AND REDRAWN		KB	KCB	
1	9-8-70	APPVD FOR CONSTRUCTION		KB		

TABLE OF CHANGES

APPROVED BY

GM 167027 169372
SUPERV. E.C. [illegible]
DSGN. E. [illegible]
DR. E.B.
CH. KC [illegible]
O.K. KCL
DATE 9-28-70
SCALE NONE

PIPING INSULATION SPECIFICATION

DIABLO CANYON

DEPARTMENT OF ENGINEERING
PACIFIC GAS AND ELECTRIC COMPANY
SAN FRANCISCO, CALIFORNIA

BILL OF MATERIAL
DRAWING LIST
SUPERSEDES
SUPERSEDED BY
SHEET NO. SHEETS

DRAWING NUMBER 101905 CHANGE 3

GENERAL COMPUTATION SHEET

FILE NO. _____
LOCATION _____

SUBJECT PIPE INSULATION WEIGHTS

BY R. L. Genio DATE 3-18-70 CHECKED BY D. Blum APPROVED BY _____

WEIGHTS, LB./FT

NOMINAL PIPE SIZE (Inches)	INSULATION THICKNESS (Inches) 1	1 1/2	2	2 1/2	3	3 1/2	4	4 1/2	5
1/2									
3/4									
1	0.68	1.20	1.92	2.76	3.72	4.80			
1 1/2	0.79	1.52	2.52	3.48	4.56	5.76			
2	0.96	1.63	2.52	3.48	4.44	5.64	7.08		
2 1/2	1.09	2.28	3.24	4.32	5.52	6.96	8.40		
3	1.20	2.04	3.00	4.08	5.28	6.72	8.16		
4	1.56	2.52	3.60	4.68	6.12	7.56	9.25		
6	2.04	3.24	4.56	6.12	7.68	9.96	11.65		
8		4.08	5.64	7.92	9.60	11.65	14.05		
10		5.16	7.08	9.00	11.15	13.45	15.85		
12		6.00	8.16	10.55	12.85	15.35	18.25		
14		6.12	8.40	10.80	13.51	16.10	18.85		
16		6.84	9.36	12.12	14.90	17.90	20.90		
18		7.68	10.44	13.45	16.45	19.70	23.02		
20		8.40	11.51	14.75	18.00	21.50	25.10		
22		9.25	12.57	16.08	19.65	23.30	27.20		
24		9.97	13.58	17.30	21.22	25.20	29.30		
26		10.82	14.68	18.68	22.80	27.00	31.42		
28		11.60	15.75	19.95	24.33	28.82	33.48		
30		12.35	16.75	21.22	25.90	30.65	35.60		

NOTES:

1. FIGURES COMPILED FROM GRINNELL - PIPE HANGER DESIGN AND ENGINEERING - INSULATION WEIGHT FACTORS PAGE 49 (TABLE)

2. WEIGHTS COMPUTED USING DENSITY = 12 #/FT^3

3. WEIGHT OF ALUMINUM WRAPPING NEGLECTED

ITEM E

HORIZONTAL AND NEW VERTICAL

HOSGRI RESPONSE SPECTRA

PGEUCF PUT FILE 11.53.56. 11/17/81 DEST 24 EQP LP

VERTICAL SPECTRA

New frame spectra - 5 mass metal

Analysis 6-11

Checked by: [illegible] 11-17-81

PREPARED BY [illegible]

NEW H[illegible]--5 MASS SPECTRA
VERTIC[illegible]
6
0.0
1.0
C-EXT-VERT-TRAN-VERT-BLD 2 PC DAMPING FL 109.67 54
0.0
1.0
C-EXT-VERT-TRAN-VERT-NEW 2 PC DAMPING FL 109.67 72
0.0
1.0
C-ANNULUS VERT--2 PC DAMPING FRAME 4 ELEV. 101.33 142
0.0
1.0
C-ANNULUS VERT--2 PC DAMPING FRAME 5 ELEV. 101.33 143
0.0
1.0
C-ANNULUS VERT--2 PC DAMPING FRAME 4 ELEV. 106.67 147
0.0
1.0
C-ANNULUS VERT--2 PC DAMPING FRAME 5 ELEV. 106.67 148
****
****
****
11
NEW HDSGRI--5 MASS SPECTRA
VERTICAL

CONDENSED
ENVELOPE OF SPECTRAL ACCELERATIONS AT
C-EXT-VERT-TRAN-VERT-BLD 2 PC DAMPING AT ELEV. 109.670
C-EXT-VERT-TRAN-VERT-NEW 2 PC DAMPING AT ELEV. 109.670
C-ANNULUS VERT--2 PC DAMPING F AT ELEV. 101.330
C-ANNULUS VERT--2 PC DAMPING F AT ELEV. 101.330
C-ANNULUS VERT--2 PC DAMPING F AT ELEV. 106.670
C-ANNULUS VERT--2 PC DAMPING F AT ELEV. 106.670
TO BE USED AS DESIGN SPECTRAL ACCELERATIONS

	PERIOD	ACCEL(G)	ACCEL(IN/S*S)	FREQUENCY(HZ)
1	0.0000	.6740	260.19	9999.00
2	.0160	.7214	279.48	62.50
3	.0190	.7337	283.22	52.63
4	.0230	.7620	294.16	43.48
5	.0260	.7980	308.06	38.46
6	.0330	2.0610	803.35	30.30
7	.0340	2.6600	1026.87	29.41
8	.0450	2.6600	1026.87	22.22
9	.0460	2.4530	946.96	21.74
10	.0480	2.9390	1134.57	20.83
11	.0500	2.9403	1135.07	20.00
12	.0500	2.9403	1135.07	20.00
13	.0650	2.9500	1138.82	15.38
14	.0660	2.8883	1115.01	15.15
15	.0680	2.8680	1107.16	14.71
16	.0750	3.0400	1192.86	13.33
17	.0910	3.0900	1192.86	10.99
18	.0920	3.0000	1158.12	10.87
19	.0980	3.0000	1158.12	10.20
20	.0990	2.8760	1110.25	10.10
21	.1040	2.7300	1053.89	9.62
22	.1120	2.5400	995.98	8.93
23	.1290	2.3980	925.72	7.75
24	.1680	2.1570	832.69	5.95
25	.1700	2.1500	830.33	5.88

26	.730	2.1423	927.01	5.78
27	.850	2.2290	860.48	5.41
28	.1940	2.3010	888.28	5.15
29	.2030	2.6940	1039.99	4.93
30	.2110	3.1740	1225.29	4.74
31	.2130	3.2450	1252.70	4.69
32	.2580	3.2200	1243.05	3.88
33	.2620	2.7250	1051.96	3.82
34	.2670	2.4600	949.66	3.75
35	.2890	2.1540	831.53	3.46
36	.3410	2.1030	811.84	2.93
37	.3830	2.1240	819.95	2.61
38	.4320	2.0490	791.00	2.31
39	.4970	1.8800	725.76	2.01
40	.5450	1.7640	680.97	1.83
41	.5970	1.6270	628.09	1.68
42	.6700	1.4530	560.92	1.49
43	.6760	1.4341	553.62	1.47
44	.7350	1.3190	509.19	1.36
45	.8020	1.2180	470.20	1.25
46	.8660	1.1310	436.61	1.15
47	.9270	1.0620	409.97	1.08
48	.9710	1.0220	394.53	1.03
49	1.0000	1.0000	386.04	1.00

```
11.50.01.SPECTRA,P4,T500.
11.50.01.ABF , INPUT  ,   0.008K1008.
11.50.01.USER,0UU21VC,,KMA.
11.50.01. PLEASE CHANGE YOUR CDC SUPPLIED PASSWOR
11.50.01.D.
11.50.01.ABG , P4.
11.50.04.       .211 CP SECONDS EXECUTION TIME
11.50.09.CHARGE,F3040**,*003*.
11.50.11.$CALL(    NOTICE )
11.50.12.COMMENT. GOTO,1END.
11.50.12.GET,MESSAGE/UN=LIBRARY.
11.50.13.MESSAGE. ALL PTRESD AND SPECOUTS WILL NO
11.50.13.M AUTOMATICALLY
11.50.13.MESSAGE. GO TO CDC.  GET YOUR OUTPUT FRO
11.50.13.M ERMIE HPLMS
11.50.13.1END,COMMENT.
11.50.13.ROUTE,OUTPUT,DC=PR,ST=WC7,UN=MKIVPM,FID=
11.50.14.PGE,DEF.
11.50.14. ROUTE COMPLETE.
11.50.14.HEADING.  *0611V*
11.50.14.HEADING.  SPECOUT
11.50.14.HEADING.  PG E
11.50.15.SBULIM,AR=500.
11.50.15.COPYBR,INPUT,TAPE19.
11.50.15. COPY COMPLETE.
11.50.15.REWIND,TAPE19.
11.50.15.COPYSBF,TAPE19,MAINSPK.
11.50.15. END OF INFORMATION ENCOUNTERED.
11.50.15.REWIND,TAPE19.
11.50.15.COPYSBF,TAPE19,OUT.
11.50.15. END OF INFORMATION ENCOUNTERED.
11.50.16.ATTACH,ZHDSOBJ/UN=F3040VC.
11.50.16.ZHDSOBJ.
11.50.20.    STOP
11.50.20.REPLACE,TAPE14=INPTSD.
11.50.20.REPLACE,TAPE11=X0611V.
11.50.21.REWIND,TAPE12.
11.50.21.COPYSBF,TAPE12,MAINSPK.
11.50.21. END OF INFORMATION ENCOUNTERED.
11.50.22.PACK,MAINSPK.
11.50.22. PACK COMPLETE.
11.50.22.REPLACE,MAINSPK.
11.50.23.REWIND,TAPE13.
11.50.24.COPYSBF,TAPE13,OUT.
11.50.24. END OF INFORMATION ENCOUNTERED.
11.50.24.PACK,OUT.
11.50.25. PACK COMPLETE.
11.50.25.REWIND,OUT.
11.50.25.COPYSBF,OUT,OUTPUT.
11.50.25. END OF INFORMATION ENCOUNTERED.
11.50.25.STIME       3.557 UNTS.
11.50.25.CTIME       3.289 SECS.
11.50.26.DAYFILE.
```

ITEM E

RESPONSE SPECTRA

6-11

HORIZONTAL

prepared by: J Hom 10-28-81

checked by: P Kalinsolubang 10-29-81

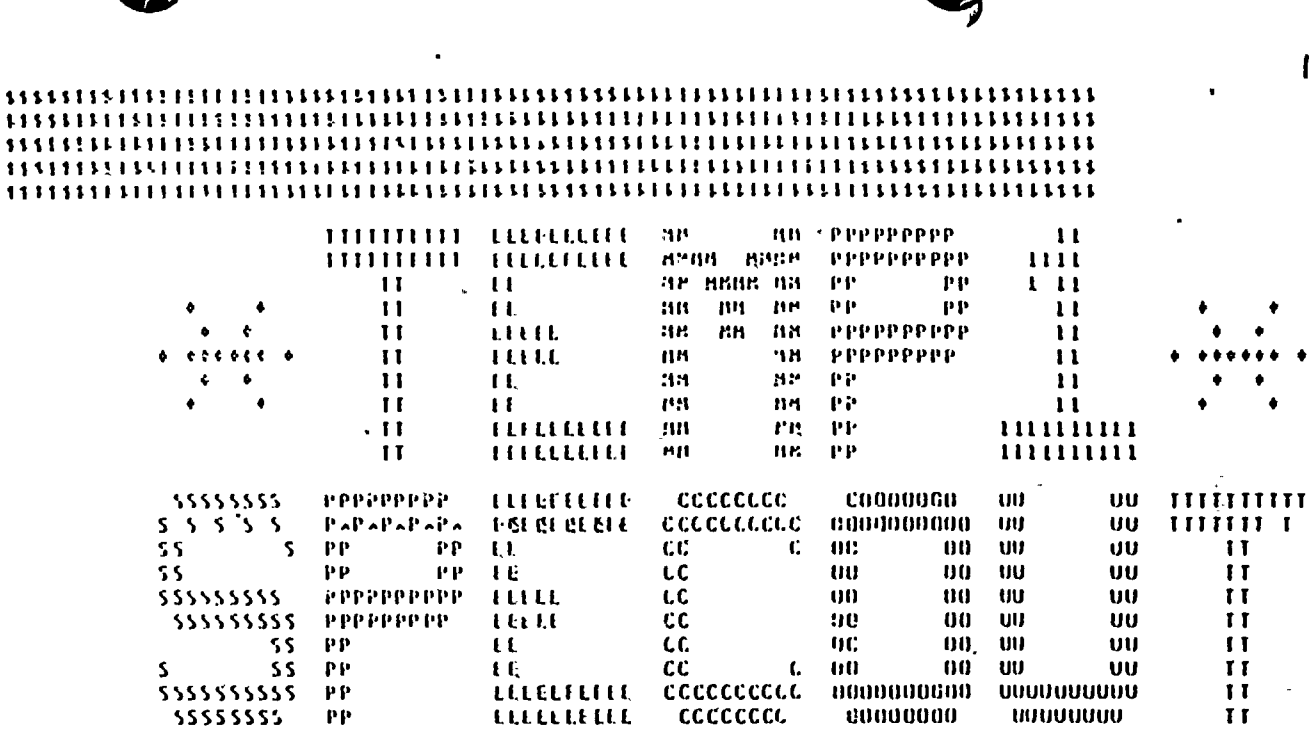

```
10.C. UNIT [illegible]-111
HOSGRI HOR[illegible]ZONTAL SPECTRA
6
0.0
1.0
C-EXT-  -TRAN-HOR-BLU                2 PC DAMPING                EL 109.67     16
0.0
1.0
C-EXT-  -TRAN-HOR-NEW                2 PC DAMPING                EL 109.67     34
1.106.67
2.64.25
C-INT-  -TRAN-HOR-BLU                2 PC DAMPING                EL 110.00     88
C-INT-  -HOR-ROT-BLU                 2 PC DAMPING                EL 110.00    118
2.64.25
C-INT-  -TRAN-HOR-BLU                2 PC DAMPING                EL 102.00     91
C-INT-  -HOR-ROT-BLU                 2 PC DAMPING                EL 102.00    121
1.101.33
2.64.25
C-INT-  -TRAN-HOR-BLU                2 PC DAMPING                EL 102.00     91
C-INT-  -HOR-ROT-BLU                 2 PC DAMPING                EL 102.00    121
1.0
C-INT-EXT-  -TRAN-HOR-BLU            2 PC DAMPING                EL 85.00      77
1.106.67
2.64.25
C-INT-  -TRAN-HOR-NEW                2 PC DAMPING                EL 110.00    103
C-INT-  -HOR-ROT-NEW                 2 PC DAMPING                EL 110.00    133
2.64.25
C-INT-  -TRAN-HOR-NEW                2 PC DAMPING                EL 102.00    106
C-INT-  -HOR-ROT-NEW                 2 PC DAMPING                EL 102.00    137
1.101.33
2.64.25
C-INT-  -TRAN-HOR-NEW                2 PC DAMPING                EL 102.00    106
C-INT-  -HOR-ROT-NEW                 2 PC DAMPING                EL 102.00    137
1.0
C-INT-EXT-  -TRAN-HOR-NEW            2 PC DAMPING                EL 85.00      37
LAST
                        ****************************
                        ****************************
                        ****************************
11
 D.C. UNIT 1 (6-11)
 HOSGRI HORIZONTAL SPECTRA


 CONDENSED
 ENVELOPE OF SPECTRAL ACCELERATIONS AT
  C-EXT-  -TRAN-HOR-BLU              2 PC DAMPING      AT ELEV.  109.670
  C-EXT-  -TRAN-HOR-NEW              2 PC DAMPING      AT ELEV.  109.670
  C-INT-  -TRAN-HOR-BLU;HOR[illegible]--      AT ELEV.  106.670
  C-INT-EXT-  -TRAN-HOR-BLU          2 PC DAMPING      AT ELEV.  101.330
  C-INT-  -TRAN-HOR-NEW;HOR[illegible]--      AT ELEV.  106.670
  C-INT-EXT-  -TRAN-HOR-NEW          2 PC DAMPING      AT ELEV.  101.330
  TO BE USED AS DESIGN SPECTRAL ACCELERATIONS
        PERIOD    ACCEL(G)  ACCELERN(S*S)    FREQUENCY(HZ)
   1    0.0000     .7710       297.64          9999.00
   2     .0186     .8380       326.41            76.32
   3     .0250     .8930       344.73            40.00
   4     .0350     .9560       369.05            28.57
   5     .0360     .9669       373.25            27.78
   6     .0370     .9823       379.21            27.03
   7     .0370     .9823       379.21            27.03
   8     .0380    1.0040       387.59            26.32
   9     .0390    1.0491       404.99            25.64
```

INTERPOLATED ELEVATION

ECCENTRICITIES

TRANSLATION

ROTATION

73	.7750	1.7040	657.80	1.29
74	.7850	1.6763	647.11	1.27
75	.8150	1.6059	619.94	1.23
76	.8400	1.5489	597.94	1.19
77	.9070	1.3991	540.09	1.10
78	.9590	1.2819	494.85	1.04
79	1.0000	1.1618	444.50	1.00

10	.0410	1.0700	413.06	24.39
11	.0420	1.0731	414.25	23.81
12	.0440	1.0999	420.71	22.73
13	.0530	1.3150	515.36	18.87
14	.0570	1.4720	568.25	17.86
15	.0640	1.5120	581.69	15.63
16	.0650	1.5240	588.33	15.38
17	.0700	1.8545	715.92	14.29
18	.0720	2.0643	796.89	13.89
19	.0740	2.3989	926.07	13.51
20	.0740	2.5598	988.17	13.51
21	.0750	2.6869	1037.25	13.33
22	.0760	2.9749	1148.43	13.16
23	.0780	3.1157	1202.88	12.82
24	.0800	3.1340	1209.37	12.50
25	.0820	3.1341	1209.88	12.20
26	.0850	3.1116	1201.19	11.76
27	.0860	3.0774	1188.01	11.63
28	.0920	2.9308	1131.41	10.87
29	.0960	2.7805	1073.38	10.42
30	.1030	2.6274	1014.28	9.71
31	.1040	2.6738	1032.21	9.62
32	.1050	2.7440	1059.29	9.52
33	.1120	2.7970	1079.75	8.93
34	.1200	2.8070	1083.61	8.33
35	.1260	2.7550	1063.54	7.94
36	.1270	2.6850	1036.52	7.87
37	.1280	2.6352	1017.31	7.81
38	.1340	2.6869	1029.54	7.46
39	.1510	2.7605	1065.66	6.62
40	.1670	2.8439	1097.88	5.99
41	.1680	2.8494	1099.97	5.95
42	.1740	2.8729	1107.07	5.75
43	.1870	2.9004	1119.66	5.35
44	.1970	2.9229	1128.35	5.08
45	.1980	3.0020	1158.89	5.05
46	.2090	5.1520	1988.88	4.78
47	.2130	5.2270	2017.83	4.69
48	.2330	5.2320	2019.76	4.29
49	.2556	5.2240	2016.67	3.92
50	.2570	5.1870	2003.16	3.89
51	.2720	4.7930	1850.29	3.82
52	.2680	4.1870	1617.12	3.73
53	.2730	3.7460	1453.81	3.66
54	.2770	3.5320	1364.49	3.61
55	.2800	3.3840	1306.36	3.57
56	.2860	3.2150	1241.12	3.50
57	.2950	3.0660	1183.60	3.39
58	.3090	2.9510	1139.26	3.24
59	.3390	2.7820	1073.96	2.95
60	.3770	2.6389	1018.73	2.66
61	.3840	2.6397	1019.04	2.60
62	.4040	2.6449	1020.69	2.48
63	.4390	2.5920	1000.62	2.28
64	.4820	2.4790	956.99	2.07
65	.5180	2.3820	919.55	1.93
66	.5610	2.3040	889.44	1.78
67	.5900	2.2460	867.05	1.69
68	.6430	2.0840	804.51	1.56
69	.6970	1.9040	735.02	1.43
70	.7029	1.8687	721.40	1.41
71	.7200	1.8387	709.82	1.39
72	.7453	1.7717	684.71	1.34

```
17.15.47.SP[illegible],P4,T5GO.
17.15.47.ABE , INPUT ,   0.01SKIDDB.
17.15.47.USER,DDU21*C,,KWA.
17.15.47. PLEASE CHANGE YOUR CDC SUPPLIED PASSWORD
17.15.47.0.
17.15.47.ABG , P4.
17.15.49.       .216 CP SECONDS EXECUTION TIME
17.15.50.CHARGE,F3040**,*0019.
17.15.51.SCALLE    NOTICE )
17.15.51.GOTO,IEND.
17.15.51.IEND,COMMENT.
17.15.51.ROUTE,OUTPUT,DC=PR,ST=*CZ,UN=DDU21*C,FID
17.15.51.*PGF,DEF.
17.15.52. ROUTE COMPLETE.
17.15.52.HEADING.  *TEMP1*
17.15.52.HEADING.  SPECOUT
17.15.52.SBULIN,AB=SCO.
17.15.52.COPYBR,INPUT,TAPE19.
17.15.52. COPY COMPLETE.
17.15.52.REWIND,TAPE19.
17.15.52.COPYSBF,TAPE19,MAINSPK.
17.15.52. END OF INFORMATION ENCOUNTERED.
17.15.52.REWIND,TAPE19.
17.15.52.COPYSBF,TAPE19,OUT.
17.15.52. END OF INFORMATION ENCOUNTERED.
17.15.53.ATTACH,ZHOSOBJ/UN=F3040*C.
17.15.53.ZHOSOBJ.
17.15.55.    STOP
17.15.55.REPLACE,TAPE14=INPISD.
17.15.56.REPLACE,TAPE11=XTEMP1.
17.15.57.REWIND,TAPE12.
17.15.57.COPYSBF,TAPE12,MAINSPK.
17.15.57. END OF INFORMATION ENCOUNTERED.
17.15.57.PACK,MAINSPK.
17.15.57. PACK COMPLETE.
17.15.57.REPLACE,MAINSPK.
17.15.58.REWIND,TAPE13.
17.15.58.COPYSBF,TAPE13,OUT.
17.15.59. END OF INFORMATION ENCOUNTERED.
17.15.59.PACK,OUT.
17.15.59. PACK COMPLETE.
17.15.59.REWIND,OUT.
17.15.59.COPYSBF,OUT,OUTPUT.
17.15.59. END OF INFORMATION ENCOUNTERED.
17.15.59.STIME       5.304 UNITS.
17.15.59.CTIME       5.041 SECS.
17.15.59.GAYFELL.
```

ITEM F

SEISMIC ANCHOR MOVEMENTS

LEGEND

10 NODAL POINT NUMBER

(7) ELEMENT NUMBER

⊕ NODAL POINTS FOR WHICH STRUCTURE RESPONSES AND ACCELERATION RESPONSE SPECTRA ARE COMPUTED

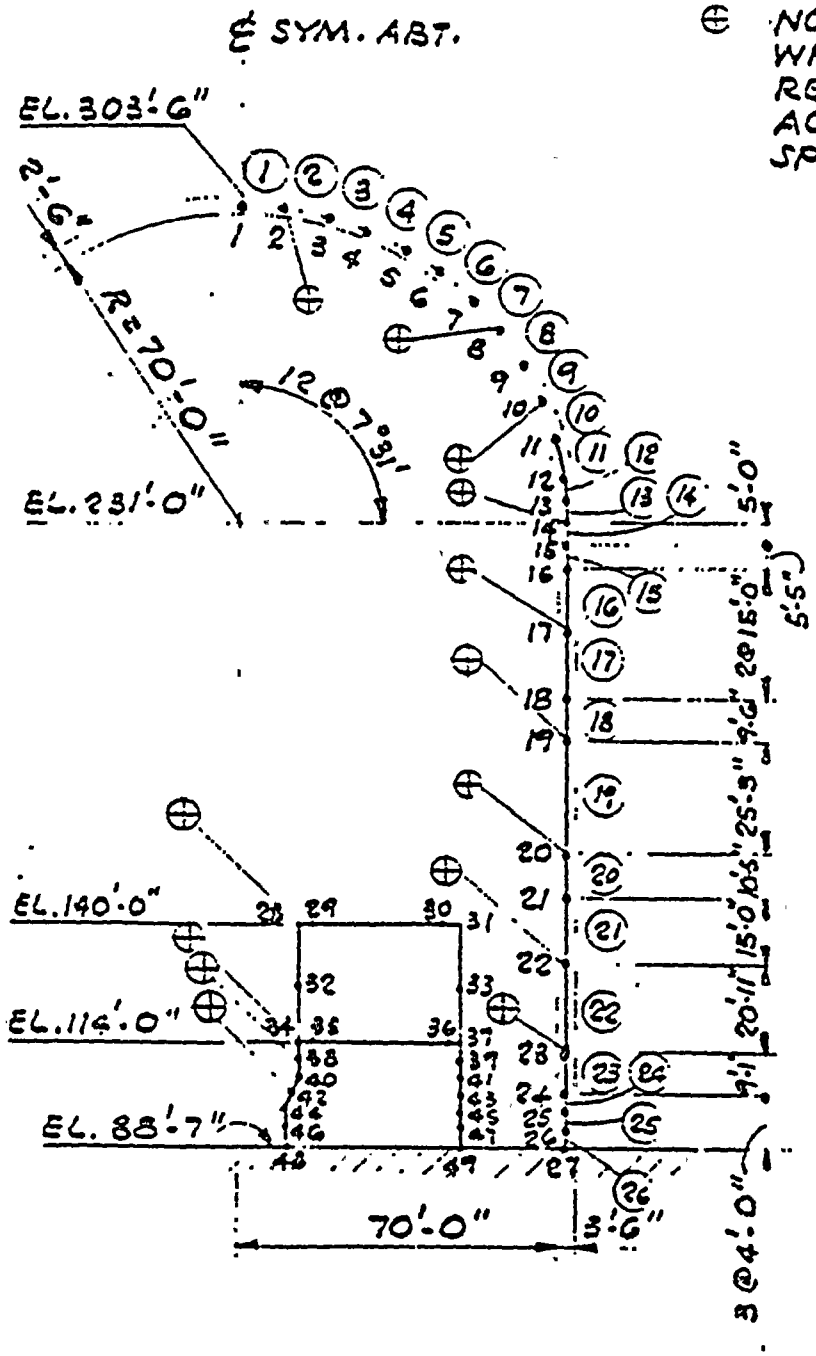

FINITE - ELEMENT MODEL FOR TRANSLATIONAL & VERTICAL ANALYSIS

DIABLO CANYON

CONTAINMENT STRUCTURE

FIGURE NO. 7(b)

TABLE 4a

CONTAINMENT EXTERIOR STRUCTURE

MAXIMUM HORIZONTAL DISPLACEMENTS

Nodal Point**	Elev. (ft)	Horizontal Displacement (in.)				
		Blume-Hosgri Horiz. Input*	Newmark-Hosgri Horiz. Input*	Vertical Input	3-Component SRSS Blume-Hosgri	3-Component SRSS Newmark-Hosgri
2	301.64	1.124	1.016	0.002	1.124	1.016
8	274.37	1.036	0.939	0.009	1.036	0.939
10	258.27	0.969	0.881	0.020	0.970	0.882
14	231.00	0.828	0.758	0.020	0.828	0.758
17	205.58	0.665	0.615	0.008	0.665	0.615
19	181.08	0.534	0.493	0.009	0.534	0.494
20	155.83	0.394	0.363	0.011	0.394	0.364
22	130.58	0.262	0.243	0.012	0.263	0.243
23	109.67	0.156	0.143	0.012	0.156	0.144

*Effective horizontal acceleration at Containment Shell due to absolute sum of translational response and torsional response from 5% eccentricity.

**See Figure 7b.

TABLE 4b

CONTAINMENT EXTERIOR STRUCTURE

MAXIMUM VERTICAL DISPLACEMENTS

Nodal Point*	Elev. (ft)	Vertical Displacement (in.)				
		Blume-Hosgri Horiz. Input	Newmark-Hosgri Horiz. Input	Vertical Input	3-Component SRSS Blume-Hosgri	3-Component SRSS Newmark-Hosgri
2	301.64	0.032	0.029	0.108	0.113	0.112
8	274.37	0.198	0.175	0.076	0.212	0.191
10	258.27	0.228	0.202	0.066	0.237	0.213
14	231.00	0.240	0.211	0.056	0.246	0.218
17	205.58	0.221	0.196	0.049	0.226	0.202
19	181.08	0.196	0.174	0.041	0.200	0.179
20	155.83	0.158	0.142	0.031	0.161	0.145
22	130.58	0.109	0.098	0.020	0.111	0.100
23	109.67	0.058	0.053	0.010	0.059	0.054

*See Figure 7b.

TABLE 4c

CONTAINMENT INTERIOR STRUCTURE

MAXIMUM HORIZONTAL DISPLACEMENTS AND ROTATIONS*

Nodal Point**	Elevation (ft)	Blume-Hosgri Displacement (in.)	Newmark-Hosgri Displacement (in.)	Blume-Hosgri Rotation (rad x 10^{-5})	Newmark-Hosgri Rotation (rad x 10^{-5})
28	140.00	0.05	0.06	1.13	1.21
34	114.00	0.03	0.03	0.78	0.82

*Due to horizontal input only.
**See Figure 7b.

CONTAINMENT INTERIOR STRUCTURE
MAXIMUM VERTICAL DISPLACEMENTS*

Structure	Location**	Elevation (ft)	Displacement (in.)
Concrete Structure	Nodal Point 71	140.00	0.0054
	Nodal Point 49	114.00	0.0032
	Nodal Point 28	106.67	0.0024
	Nodal Point 7	101.33	0.0015
Annulus (Steel) Structure	Frame 1	140.00	0.060
	Frame 2	140.00	0.080
	Frame 3	140.00	0.064
	Frame 4	140.00	0.057
	Frame 5	140.00	0.082
	Frame 1	116.86	0.035
	Frame 2	116.86	0.050
	Frame 3	116.86	0.031
	Frame 4	116.86	0.037
	Frame 5	116.86	0.056
	Frame 1	106.67	0.015
	Frame 2	106.67	0.028
	Frame 3	106.67	0.026
	Frame 4	106.67	0.026
	Frame 5	106.67	0.037
	Frame 1	101.33	0.014
	Frame 2	101.33	0.035
	Frame 3	101.33	0.040
	Frame 4	101.33	0.014
	Frame 5	101.33	0.032

*Due to vertical input only.
**See accompanying figures.

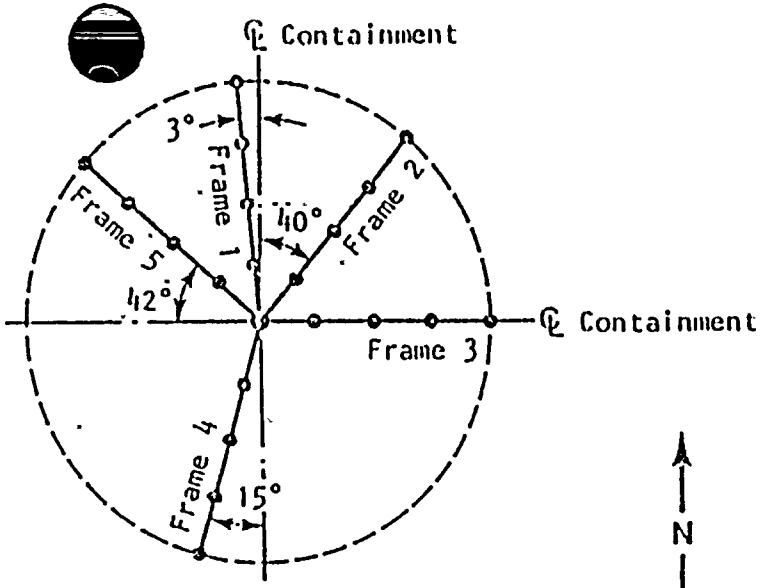

Plan

N

LEGEND

2 — Node number

• — Steel structure mass point

⊗ — Concrete structure mass point

Note: Nodes 1, 7, 28, 49, 50, and 71 are along centerline of model and are common to all five frames.

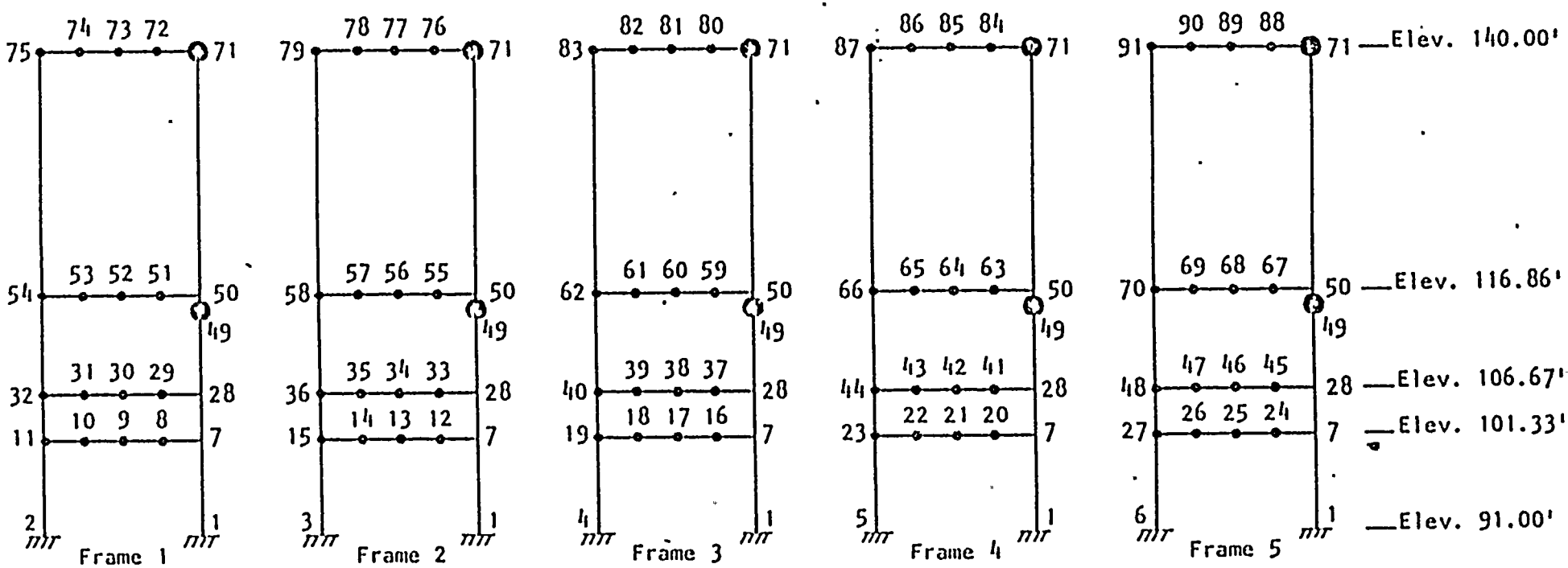

Elevations

MATHEMATICAL MODEL, ANNULUS STRUCTURE, UNIT 1

ITEM H

FILE 33 FORMS (HANGER LOAD TABULATION)

PROJECT. LL-1	LINE NO. (1)S1 1985 12 III B B	SEQ. NO. 10
FILE NO. 33	SYSTEM RHR INJECT HOT LEG 1+2	RESTR. 1(H) 1856

TYPE OF ANALYSIS	SEISMIC					
ANALYSIS NO.	6-11		6-11	6-11		
REV. NO./DATE	4/7-2-73		5/10-19-81	6/12-1-81		
CASE	DE		HOSGR1	HOSGR1		
DATA POINT	14		14	14		
FORCE (LB)				—		
FORCE (LB)				—		
FORCE ⊥H (LB)	525		1341	595		
MOMENT (-LB)				—		
MOMENT (-LB)				—		
MOMENT (-LB)				—		
MVMT. X (IN)	0		0.001	0.001		
MVMT. Y (IN)	0		0	0.006		
MVMT. Z (IN)	0		0	0		

TYPE OF ANALYSIS	THERMAL					
ANALYSIS NO.	88	88	88			
REV. NO./DATE	C/3-8-74	C/3-8-74	C/3-8-74			
CASE	NORMAL	ACCID	TEST			
DATA POINT	42	42	42			
FORCE (LB)						
FORCE (LB)						
FORCE (LB)						
MOMENT (-LB)						
MOMENT (-LB)						
MOMENT (-LB)						
MVMT. X (IN)	0.263	0.240	0.004			
MVMT. Y (IN)	0	0	0			
MVMT. Z (IN)	3.177	3.129	0.279			

FILE COPY

TYPE OF ANALYSIS	DEAD LOAD	TRIB. PIPE WT.
ANALYSIS NO.	N/A	6-11
REV. NO./DATE		11-18-77
DATA POINT		14
FORCE (LB)		
FORCE (LB)		
FORCE ⊥H (LB)		1852

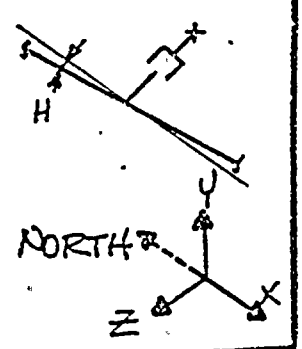

P. G. & E. CO.

REV.	DATE	DESCRIPTION OF CHANGE	BY	CHKD.
1	12-2-81	REVISED HOSGR1 INCREASED	RK	Z.T.
0	10-20-81	REVISED HOSGR1 AND DEAD LOAD	RK	D.E.B.

SH 1 OF 1 — REV. 1

ó-1450 (3-80)

-1450 (3-80)

PROJECT. DC-1	LINE NO. 1 S1 985 12 III B	SEQ. NO. S-1239	10 / 1951
FILE NO. 33	SYSTEM RHR INJECT HOT LEG 1+2	RESTR. AXIAL	

TYPE OF ANALYSIS	SEISMIC					
ANALYSIS NO.	6-11		6-11	6-11		
REV. NO./DATE	4/7-2-73		5/10-19-81	6/12-1-81		
CASE	DE		HOSGR1	HOSGR1		
DATA POINT	14		13	13		
FORCE AXIAL (LB)	1806		4029	3313		
FORCE (LB)				—		
FORCE (LB)				—		
MOMENT (-LB)				—		
MOMENT (-LB)				—		
MOMENT (-LB)				—		
MVMT. X (IN)	0		0	0		
MVMT. Y (IN)	0		0.011	0.005		
MVMT. Z (IN)	0		0.026	0.012		

TYPE OF ANALYSIS	THERMAL					
ANALYSIS NO.	88	88	88			
REV. NO./DATE	C/3-8-74	C/3-8-74	C/3-8-74			
CASE	NORMAL	ACCID	TEST			
DATA POINT	42	42	42			
FORCE (LB)						
FORCE (LB)						
FORCE (LB)						
MOMENT (-LB)						
MOMENT (-LB)						
MOMENT (-LB)						
MVMT. X (IN)	0.263	0.240	0.004			
MVMT. Y (IN)	0	0	0			
MVMT. Z (IN)	3.177	3.129	0.279			

FILE COPY

TYPE OF ANALYSIS	DEAD LOAD	TRIB. PIPE WT.
ANALYSIS NO.	N/A	6-11
REV. NO./DATE		11-18-77
DATA POINT		14
FORCE AXIAL (LB)		6720
FORCE (LB)		
FORCE (LB)		

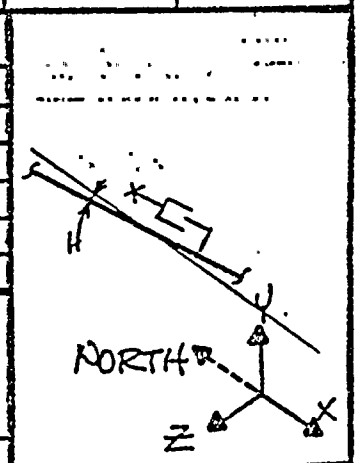

P. G. & E. CO.

REV.	DATE	DESCRIPTION OF CHANGE	BY	CHKD.
1	12-2-81	REVISED HOSGR1 INCORPORATED ON ATTACHED	RK	Z.T.
0	10-20-81	REVISED HOSGR1 AND DEAD LOAD HGR	RK	D.E.B.

SH 1 OF 1 REV. 1

J-1450 (3-80)

PROJECT. DC-1	LINE NO. 1 S1 985 12 III B	SEQ. NO. S-1415	12 / 3354
FILE NO. 33	SYSTEM RHR INJECT HOT LEG 1+2	RESTR. AXIAL	

TYPE OF ANALYSIS	SEISMIC					
ANALYSIS NO.	6-11		6-11	6-11		
REV. NO./DATE	4/7-2-73		5/10-19-81	6/12-1-81		
CASE	DE		HOSGRI	HOSGRI		
DATA POINT	32, 33		32	32		
FORCE AXIAL (LB)	2952		4765	4704		
FORCE (LB)				–		
FORCE (LB)				–		
MOMENT (-LB)				–		
MOMENT (-LB)				–		
MOMENT (-LB)				–		
MVMT. X (IN)	0.076		0.128	0.132		
MVMT. Y (IN)	0.015		0.028	0.027		
MVMT. Z (IN)	0.107		0.179	0.185		

TYPE OF ANALYSIS	THERMAL					
ANALYSIS NO.	88	88	88			
REV. NO./DATE	C/3-8-74	C/3-8-74	C/3-8-74			
CASE	NORMAL	ACCID	TEST			
DATA POINT	30	30	30			
FORCE (LB)						
FORCE (LB)						
FORCE (LB)						
MOMENT (-LB)						
MOMENT (-LB)						
MOMENT (-LB)						
MVMT. X (IN)	0.576	0.434	-0.083			
MVMT. Y (IN)	-0.121	-0.120	-0.011			
MVMT. Z (IN)	2.660	2.129	-0.257			

FILE COPY

TYPE OF ANALYSIS	DEAD LOAD	TRIB. PIPE WT.
ANALYSIS NO.	N/A	6-11
REV. NO./DATE		11-18-77
DATA POINT		32
FORCE AXIAL (LB)		3565
FORCE (LB)		
FORCE (LB)		

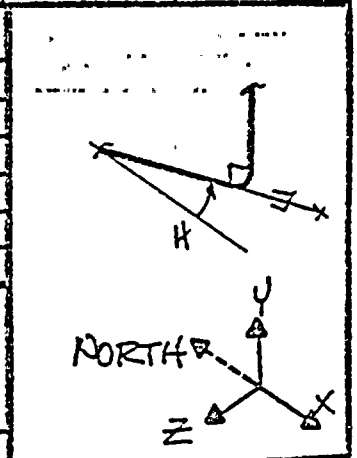

P. G. & E. CO.

REV.	DATE	DESCRIPTION OF CHANGE	BY	CHKD.
1	12-2-81	REVISED HOSGRI INCREASE	RK	Z.T.
0	10-20-81	REVISED HOSGRI AND DEAD LOAD	RK	D.E.B.

SH 1 OF 1 — REV. 1

J-1450 (3-80)

PROJECT. DC-1	LINE NO. 1 S1 985 12 III B	SEQ. NO. S-1216	12 / 3454
FILE NO. 33	SYSTEM RHR INJECT HOT LEG 1+2	RESTR. LH	

TYPE OF ANALYSIS	SEISMIC					
ANALYSIS NO.	6-11		6-11	6-11		
REV. NO./DATE	4/7-2-73		5/10-19-81	6/12-1-81		
CASE	DE		HOSGR1	HOSGR1		
DATA POINT	30, 29		29	29		
FORCE (LB)				–		
FORCE (LB)				–		
FORCE LH (LB)	2089		3975	3918		
MOMENT (-LB)				–		
MOMENT (-LB)				–		
MOMENT (-LB)				–		
MVMT. X (IN)	0		0	0		
MVMT. Y (IN)	0		0	0		
MVMT. Z (IN)	0		0	0		

TYPE OF ANALYSIS	THERMAL					
ANALYSIS NO.	88	88	88			
REV. NO./DATE	C/3-8-74	C/3-8-74	C/3-8-74			
CASE	NORMAL	ACCID	TEST			
DATA POINT	31	31	31			
FORCE (LB)						
FORCE (LB)						
FORCE (LB)						
MOMENT (-LB)						
MOMENT (-LB)						
MOMENT (-LB)						
MVMT. X (IN)	0.779	0.663	-0.036			
MVMT. Y (IN)	0	0	0			
MVMT. Z (IN)	3.276	2.781	-0.157			

FILE COPY

TYPE OF ANALYSIS	DEAD LOAD	TRIB. PIPE WT.
ANALYSIS NO.	N/A	6-11
REV. NO./DATE		11-18-77
DATA POINT		30
FORCE (LB)		
FORCE (LB)		
FORCE LH (LB)		2512

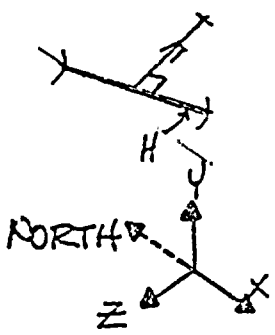

P. G. & E. CO.

REV.	DATE	DESCRIPTION OF CHANGE	BY	CHKD.
1	12-1-81	REVISED HOSGR1 DECREASE	RK	T.T.
0	10-20-81	REVISED HOSGR1 AND DEAD LOAD	RK	D.E.E.

SH 1 OF 1 REV. 1

-1450 (3-80)

PROJECT. DC-1	LINE NO. 1 S1 985 12 III B	SEQ. NO. S-1417	12 / 355
FILE NO. 33	SYSTEM RHR INJECT HOT LEG 1+2	RESTR. 1H	

TYPE OF ANALYSIS	SEISMIC					
ANALYSIS NO.	6-11		6-11	6-11		
REV. NO./DATE	4/7-2-73		5/10-19-81	6/12-1-81		
CASE	DE		HOSGR1	HOSGR1		
DATA POINT	18, 19		18	18		
FORCE (LB)				—		
FORCE (LB)				—		
FORCE 1H (LB)	193		610	303		
MOMENT (-LB)				—		
MOMENT (-LB)				—		
MOMENT (-LB)	-			—		
MVMT. X (IN)	0.001		0.004	0.003		
MVMT. Y (IN)	0		0.003	0.004		
MVMT. Z (IN)	0		0	0		

TYPE OF ANALYSIS	THERMAL					
ANALYSIS NO.	88	88	88			
REV. NO./DATE	C/3-8-74	C/3-8-74	C/3-8-74			
CASE	NORMAL	ACCID	TEST			
DATA POINT	BET. 37,40	BET. 37,40	BET. 37,40			
FORCE (LB)						
FORCE (LB)						
FORCE (LB)						
MOMENT (-LB)						
MOMENT (-LB)						
MOMENT (-LB)						
MVMT. X (IN)	0.684	0.674	0.061			
MVMT. Y (IN)	0.001	0.001	0			
MVMT. Z (IN)	4.399	4.216	0.271			

FILE COPY

TYPE OF ANALYSIS	DEAD LOAD	TRIB. PIPE WT.
ANALYSIS NO.	N/A	6-11
REV. NO./DATE		11-18-77
DATA POINT		18
FORCE (LB)		
FORCE (LB)		
FORCE 1H (LB)		1958

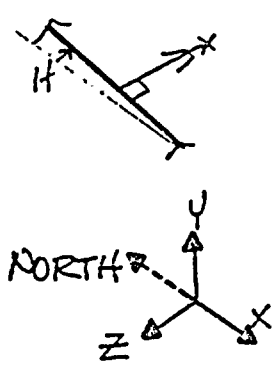

P. G. & E. CO.

REV.	DATE	DESCRIPTION OF CHANGE	BY	CHKD.
1	12-2-81	REVISED HOSGR1 INCREASE	RK	Z.T.
0	10-20-81	REVISED HOSGR1 AND DEAD LOAD	RK	D.E.B.

SH 1 OF 1 REV. 1

1450 (3-80)

PROJECT. DC-1	LINE NO. (1 S1 985 12 III B)	SEQ. NO. A-111
FILE NO. 33	SYSTEM RHR INJECT HOT LEG 1+2	RESTR. ANCHOR 40 / 46A

TYPE OF ANALYSIS	SEISMIC					
ANALYSIS NO.	6-11	(W)	6-11	(W)	(W)	6-11
REV. NO./DATE	4/7-2-73	8-27-79	5/10-19-81	8-27-79	8-27-79	6/12-1-81
CASE	DE	DE	HOSGRI	DDE	HOSGRI	HOSGRI
DATA POINT	1	2770	1	2770	2770	1
FORCE X (LB)	389	4270	2919	4130	9300	1751
FORCE Y (LB)	39	240	186	260	1030	98
FORCE Z (LB)	579	4820	2419	4710	10500	1326
MOMENT X (IN-LB)	5538	14410	10315	19070	57850	10760
MOMENT Y (IN-LB)	55095	528[illegible]0	157771	57100	134350	68810
MOMENT Z (IN-LB)	8099	5520	12387	8850	33160	13616
MVMT. X (IN)	0	0	0	0	0	0
MVMT. Y (IN)	0	0	0	0	0	0
MVMT. Z (IN)	0	0	0	0	0	0

TYPE OF ANALYSIS	THERMAL					
ANALYSIS NO.	88	88	88		90	89
REV. NO./DATE	C/3-8-74	C/3-8-74	C/3-8-74		5/6-1-72	8/6-1-72
CASE	NORMAL	ACCID	TEST		NORMAL	ACCID
DATA POINT	60	60	60		140	140
FORCE X (LB)	-1840	-2027	-377		-438	-227
FORCE Y (LB)	-25	-21	1		192	6
FORCE Z (LB)	362	341	16		1646	4222
MOMENT X (IN-LB)	-1020	-852	60		20664	76880
MOMENT Y (IN-LB)	-403786	-418452	-56280		317556	573960
MOMENT Z (IN-LB)	-2676	-2268	132		8136	27864
MVMT. X (IN)	0	0	0		0	0
MVMT. Y (IN)	0	0	0		0	0
MVMT. Z (IN)	0	0	0		0	0

TYPE OF ANALYSIS	DEAD LOAD		TRIB. PIPE WT.	
ANALYSIS NO.	6-11	6-5	6-11	6-5
REV. NO./DATE	Ø/10-3-81	6-21-79	11-18-77	7/4-16-80
DATA POINT	1	88	1	88
FORCE X (LB)	0	2	2767	1749
FORCE Y (LB)	-727	-835	734	631
FORCE Z (LB)	0	38	3539	1829
MOMENT X IN-LB	13867	-16699		
MOMENT Y IN-LB	-20	4417		
MOMENT Z IN-LB	-14036	12544		

SEISMIC 6-11, DEAD LOAD, & FLEX RESULTS MUST BE ROTATED FROM GLOBAL TO LOCAL COORDINATES FOR CORRECT LOADING

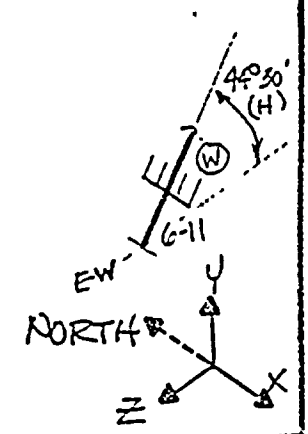

P. G. & E. CO.

REV.	DATE	DESCRIPTION OF CHANGE	BY	CHKD.
5	12-2-81	REVISED HOSGRI INCREASE	RK	Z.T.
4	10-27-81	ADDED 44-3243 DATA ONLY (SEE SHT. 2)	RK	D.B.
3	10-26-81	REVISED HOSGRI AND DEAD LOAD AND ADDED 6-5 D.L. & TRIB.	RK	D.E.R.

SH 1 OF 3 REV. 5

COPY

1450 (3-80)

PROJECT. DC-1	LINE NO. (1 K 3243 3 E)	SEQ. NO. A-111
FILE NO. 33	SYSTEM INSIDE CONT. AIR SUP.	RESTR. Y, LH

40 / 46A

TYPE OF ANALYSIS	SEISMIC					
ANALYSIS NO.	44-3243	44-3243	~~44-3243~~	44-3243		
REV. NO./DATE	10-23-81	10-23-81	~~10-23-81~~	12-3-81		
CASE	DE	ODE	~~ACEGRI~~	HDSGRI		
DATA POINT	—	—	~~—~~			
FORCE (LB)						
FORCE Y (LB)	114	114	~~456~~	353		
FORCE LH (LB)	228	228	~~127~~	127		
MOMENT (-LB)						
MOMENT (-LB)						
MOMENT (-LB)						
MVMT. (IN)						
MVMT. (IN)						
MVMT. (IN)						

TYPE OF ANALYSIS	THERMAL					
ANALYSIS NO.	N/A					
REV. NO./DATE						
CASE						
DATA POINT						
FORCE (LB)						
FORCE (LB)						
FORCE (LB)						
MOMENT (-LB)						
MOMENT (-LB)						
MOMENT (-LB)						
MVMT. (IN)						
MVMT. (IN)						
MVMT. (IN)						

FILE COPY

TYPE OF ANALYSIS	DEAD LOAD	TRIB. PIPE WT.
ANALYSIS NO.	44-3243	44-3243
REV. NO./DATE	10-23-81	10-23-81
DATA POINT	—	—
FORCE (LB)		
FORCE Y (LB)	-114	114
FORCE LH (LB)	0	114

SEE A-111 FOR FILE 44 CALCS.

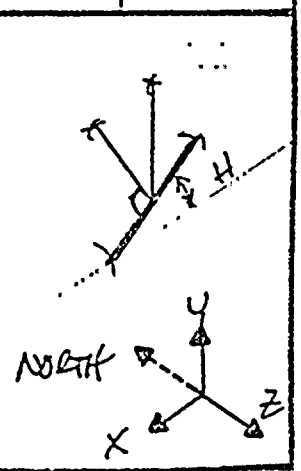

P. G. & E. CO.

REV.	DATE	DESCRIPTION OF CHANGE	BY	CHKD.
5	12-2-81	REVISED HDSGRI DECREASE	RK	Z.T.
4	10-23-81	ADDED 44-3243 DATA ONLY	RK	D.B.

SH 2 OF 3 — REV. 5

PROJECT. DC-1	LINE NO. 1 51 985 12 B	SEQ. NO. A-111 40
FILE NO. 33	SYSTEM RHR INJECT HOT LEG HZ	RESTR. ANCHOR 46

TYPE OF ANALYSIS	SEISMIC					
ANALYSIS NO.	(W)	(W)			(W)	
REV. NO./DATE	8-27-79	8-27-79			11-23-81	
CASE	DE	DDE			HOSGR1	
DATA POINT	2770	2770			2770	
FORCE AXIAL (LB)	4270	4130			14330	
FORCE Y (LB)	240	760			1250	
FORCE LH (LB)	4820	4710			810	
MOMENT AXIAL (IN -LB)	14410	19070			60730	
MOMENT Y (IN -LB)	528600	57100			131720	
MOMENT LH (IN -LB)	5520	8850			42420	
MVMT. (IN)						
MVMT. (IN)						
MVMT. (IN)						

TYPE OF ANALYSIS	THERMAL					
ANALYSIS NO.						
REV. NO./DATE						
CASE						
DATA POINT						
FORCE (LB)						
FORCE (LB)						
FORCE (LB)						
MOMENT (-LB)						
MOMENT (-LB)						
MOMENT (-LB)						
MVMT. (IN)						
MVMT. (IN)						
MVMT. (IN)						

FILE COPY

TYPE OF ANALYSIS	DEAD LOAD	TRIB. PIPE WT.
ANALYSIS NO.	6-11	
REV. NO./DATE	1/12-1-81	
DATA POINT	1	
FORCE X (LB)	-2	
FORCE Y (LB)	-725	
FORCE Z (LB)	1	
MOMENT X IN-LB	14024	
MOMENT Y IN-LB	-582	
MOMENT Z IN-LB	-13804	

SEE SHT. 1

P. G. & E. CO.

REV.	DATE	DESCRIPTION OF CHANGE	BY	CHKD.
5	2-2-81	TRANSFERRED (W) FROM SHT. 1 TO SHOW LOCAL COMPO	RK	Z.T.
5	12-2-81	REVISED HOSGR1 & D.L. INCREASE	RK	Z.T.

SH 3 OF 3 REV. 5

-1450 (3-80)

PROJECT. DC-1	LINE NO. (1 S 1 985 12 III B)	SEQ. NO. 2-1022 40/47R
FILE NO. 33	SYSTEM RHR INJECT HOT LEG 1+2	RESTR. Y

TYPE OF ANALYSIS	SEISMIC					
ANALYSIS NO.	6-11		6-11	6-11		
REV. NO./DATE	4/7-2-73		5/10-19-81	6/12-1-81		
CASE	DE		HOSGR1	HOSGR1		
DATA POINT	5		5	5		
FORCE (LB)				—		
FORCE Y (LB)	45		530	425		
FORCE (LB)				—		
MOMENT (-LB)				—		
MOMENT (-LB)				—		
MOMENT (-LB)				—		
MVMT. X (IN)	0.023		0.066	0.029		
MVMT. Y (IN)	0		0	0		
MVMT. Z (IN)	0.023		0.066	0.029		

TYPE OF ANALYSIS	THERMAL					
ANALYSIS NO.	88	88	88			
REV. NO./DATE	C/3-8-74	C/3-8-74	C/3-8-74			
CASE	NORMAL	ACCID	TEST			
DATA POINT	49	49	49			
FORCE (LB)						
FORCE Y (LB)	20	18	0			
FORCE (LB)						
MOMENT (-LB)						
MOMENT (-LB)						
MOMENT (-LB)						
MVMT. X (IN)	-0.046	-0.054	-0.013			
MVMT. Y (IN)	0	0	0			
MVMT. Z (IN)	0.595	0.604	0.070			

FILE COPY

TYPE OF ANALYSIS	DEAD LOAD	TRIB. PIPE WT.
ANALYSIS NO.	6-11	6-11
REV. NO./DATE	0/10-3-81	11-18-77
DATA POINT	5	5
FORCE (LB)		
FORCE Y (LB)	-977	983
FORCE (LB)		

ANALYSIS NO.	6-11
REV. NO./DATE	1/12-1-81
DATA POINT	5
FORCE Y. (LB)	-976

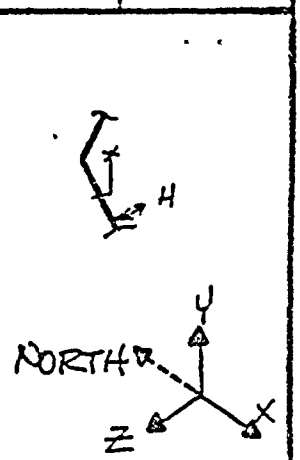

REV.	DATE	DESCRIPTION OF CHANGE	BY	CHKD.
5	12-3-81	REVISED HOSGR1 & D.L. DECREASED	RK	Z.T.
4	10-23-81	ADDED 44-3243 DATA (SEE SHT. 2)	RK	[illegible]
3	10-26-81	REVISED HOSGR1 AND DEAD LOAD	RK	D.F.B.

P. G. & E. CO.

SH 1 OF 2 REV. 5

1450 (3-80)

PROJECT. DC-1	LINE NO. (1 K 3243 3 E)	SEQ. NO. S-1093 (40/47R)
FILE NO. 33	SYSTEM INSIDE CONT. SERV. AIR	RESTR. Y, LH

TYPE OF ANALYSIS	SEISMIC					
ANALYSIS NO.	44-3243	44-3243	44-3243	44-3243		
REV. NO./DATE	10-23-81	10-23-81	10-23-81	12-3-81		
CASE	DE	DDE	HOSGR1	HOSGR1		
DATA POINT	—	—	—			
FORCE (LB)						
FORCE Y (LB)	114	114	456	353		
FORCE LH (LB)	228	228	127	127		
MOMENT (-LB)						
MOMENT (-LB)						
MOMENT (-LB)						
MVMT. (IN)						
MVMT. (IN)						
MVMT. (IN)						

TYPE OF ANALYSIS	THERMAL					
ANALYSIS NO.	N/A					
REV. NO./DATE						
CASE						
DATA POINT						
FORCE (LB)						
FORCE (LB)						
FORCE (LB)						
MOMENT (-LB)						
MOMENT (-LB)						
MOMENT (-LB)						
MVMT. (IN)						
MVMT. (IN)						
MVMT. (IN)						

FILE COPY

TYPE OF ANALYSIS	DEAD LOAD	TRIB. PIPE WT.
ANALYSIS NO.	44-3243	44-3243
REV. NO./DATE	10-23-81	10-23-81
DATA POINT	—	
FORCE (LB)		
FORCE Y (LB)	-114	114
FORCE LH (LB)	0	114

SEE S-1093 FOR FILE 44 CALCS.

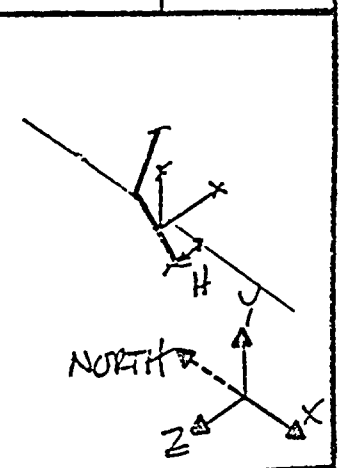

P. G. & E. CO.

REV.	DATE	DESCRIPTION OF CHANGE	BY	CHKD.	SH 2 OF 2	REV.
5	12-3-81	REVISED HOSGR1 DECREASED	RK	Z.T.		5
4	10-23-81	ADDED 44-3243 DATA	RK	D.B.		

-1450 (3-80)

PROJECT. DC-1	LINE NO. 1 S1 985 12 III B	SEQ. NO. S-409	40 / 48R
FILE NO. 33	SYSTEM RHR INJECT HOT LEG 1+2	RESTR. Y	

TYPE OF ANALYSIS	SEISMIC					
ANALYSIS NO.	6-11		6-11	6-11		
REV. NO./DATE	4/7-2-73		5/10-19-81	6/12-1-81		
CASE	DE		HOSGR1	HOSGR1		
DATA POINT	8		8	8		
FORCE (LB)				—		
FORCE Y (LB)	100		1085	790		
FORCE (LB)				—		
MOMENT (-LB)				—		
MOMENT (-LB)				—		
MOMENT (-LB)				—		
MVMT. X (IN)	0.010		0.025	0.012		
MVMT. Y (IN)	0		0	0		
MVMT. Z (IN)	0.002		0.023	0.014		

TYPE OF ANALYSIS	THERMAL					
ANALYSIS NO.	88	88	88			
REV. NO./DATE	C/3-8-74	C/3-8-74	C/3-8-74			
CASE	NORMAL	ACCID	TEST			
DATA POINT	46	46	46			
FORCE (LB)						
FORCE Y (LB)	2	-1	-3			
FORCE (LB)						
MOMENT (-LB)						
MOMENT (-LB)						
MOMENT (-LB)						
MVMT. X (IN)	0	-0.011	-0.011			
MVMT. Y (IN)	0	0	0			
MVMT. Z (IN)	1.681	1.698	0.190			

FILE COPY

TYPE OF ANALYSIS	DEAD LOAD	TRIB. PIPE WT.
ANALYSIS NO.	6-11	6-11
REV. NO./DATE	Ø/10-3-81	11-18-77
DATA POINT	8	8
FORCE (LB)		
FORCE Y (LB)	-1727	1714
FORCE (LB)		

ANALYSIS NO.	6-11	
REV. NO./DATE	1/12-1-81	
DATA POINT	8	
FORCE Y (LB)	-1729	

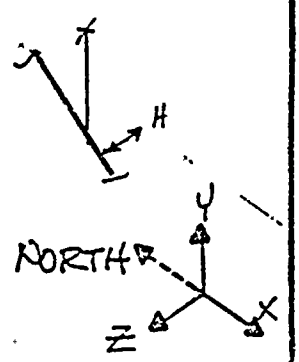

REV.	DATE	DESCRIPTION OF CHANGE	BY	CHKD.
5	12-3-81	REVISED HOSGR1 & D.L. INCREASED	RK	Z.T.
4	10-23-81	ADDED 44-3243 DATA ONLY (SEE SHT. 2)	RK	D.Blue
3	10-20-81	REVISED HOSGR1 AND DEAD LOAD	RK	D.E.B.

P. G. & E. CO.

SH 1 OF 2

REV. 5

1450 (3-80)

PROJECT. DCI	LINE NO. 1 K 3243 3 E	SEQ. NO. S-408	40
FILE NO. 33	SYSTEM INSIDE CONT. AIR SUP.	RESTR. Y, LH	40R

TYPE OF ANALYSIS	SEISMIC					
ANALYSIS NO.	44-3243	44-3243	44-3243	44-3243		
REV. NO./DATE	10-23-81	10-23-81	10-23-81	12-3-81		
CASE	DE	DDE	HOSGR1	HOSGR1		
DATA POINT	—	—	—	—		
FORCE (LB)				—		
FORCE Y (LB)	114	114	456	194		
FORCE LH (LB)	228	228	127	171		
MOMENT (-LB)				—		
MOMENT (-LB)				—		
MOMENT (-LB)				—		
MVMT. (IN)				—		
MVMT. (IN)				—		
MVMT. (IN)				—		

TYPE OF ANALYSIS	THERMAL					
ANALYSIS NO.	N/A					
REV. NO./DATE						
CASE						
DATA POINT						
FORCE (LB)						
FORCE (LB)						
FORCE (LB)						
MOMENT (-LB)						
MOMENT (-LB)						
MOMENT (-LB)						
MVMT. (IN)						
MVMT. (IN)						
MVMT. (IN)						

FILE COPY

TYPE OF ANALYSIS	DEAD LOAD	TRIB. PIPE WT.
ANALYSIS NO.	44-3243	44-3243
REV. NO./DATE	10-23-81	10-23-81
DATA POINT	—	—
FORCE (LB)		
FORCE Y (LB)	-114	114
FORCE LH (LB)	0	114

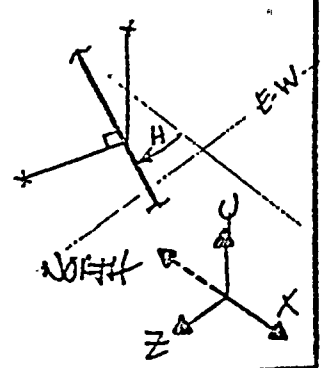

SEE S-408 FOR FILE 44 CALCS

P. G. & E. CO.

REV.	DATE	DESCRIPTION OF CHANGE	BY	CHKD.
5	12-3-81	REVISED HOSGR1 INCREASE	RK	Z.T.
4	10-23-81	ADDED 44-3243 DATA ONLY	RK	D.B.W.

SH 2 OF 2 — REV. 5

-1450 (3-80)

PROJECT. DC-1	LINE NO. 1 S1 985 12 III B	SEQ. NO. S-395
FILE NO. 33	SYSTEM RHR INJECT HOT LEG 1+2	RESTR. Y

40 / 50R

TYPE OF ANALYSIS	SEISMIC					
ANALYSIS NO.	6-11		6-11	6-11		
REV. NO./DATE	4/7-2-73		5/10-19-81	6/12-1-81		
CASE	DE		HOSGRI	HOSGRI		
DATA POINT	14		14	113		
FORCE (LB)				—		
FORCE Y (LB)	118		991	809		
FORCE (LB)				—		
MOMENT (-LB)				—		
MOMENT (-LB)				—		
MOMENT (-LB)				—		
MVMT. X (IN)	0		0.001	0		
MVMT. Y (IN)	0		0	0		
MVMT. Z (IN)	0		0	0.006		

TYPE OF ANALYSIS	THERMAL					
ANALYSIS NO.	88	88	88			
REV. NO./DATE	C/3-8-74	C/3-8-74	C/3-8-74			
CASE	NORMAL	ACCID	TEST			
DATA POINT	42	42	42			
FORCE (LB)						
FORCE Y (LB)	54	56	7			
FORCE (LB)						
MOMENT (-LB)						
MOMENT (-LB)						
MOMENT (-LB)						
MVMT. X (IN)	0.263	0.240	0.004			
MVMT. Y (IN)	0	0	0			
MVMT. Z (IN)	3.177	3.129	0.279			

FILE COPY

TYPE OF ANALYSIS	DEAD LOAD	TRIB. PIPE WT.
ANALYSIS NO.	6-11	6-11
REV. NO./DATE	0/10-3-81	11-18-77
DATA POINT	14	14
FORCE (LB)		
FORCE Y (LB)	-1848	1831
FORCE (LB)		

ANALYSIS NO.	6-11	
REV. NO./DATE	1/12-1-81	
DATA POINT	14	
FORCE Y (LB)	-1851	

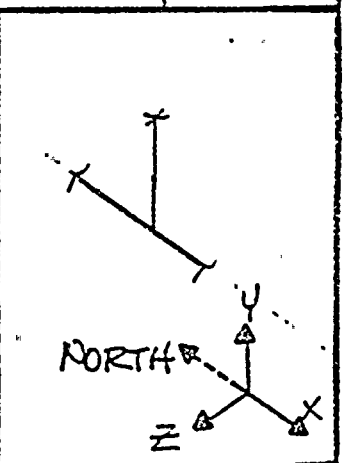

P. G. & E. CO.

REV.	DATE	DESCRIPTION OF CHANGE	BY	CHKD.
5	12-3-81	REVISED HOSGRI & D.L. INCREASED	RK	Z.T.
4	10-23-81	ADDED 44-3243 DATA ONLY (SEE SHT. 2)	RK	D.E.E.
3	10-20-81	REVISED HOSGRI AND DEAD LOAD	RK	D.E.E.

SH 1 OF 2 — REV. 5

1450 (3-80)

PROJECT. DC-1	LINE NO. 1 K 3243 3 E	SEQ. NO. 5-398 40
FILE NO. 33	SYSTEM INSIDE CONT AIRSUP	RESTR. Y, LH SOR

TYPE OF ANALYSIS	SEISMIC					
ANALYSIS NO.	44-3243	44-3243	44-3243	44-3243		
REV. NO./DATE	10-23-81	10-23-81	10-23-81	12-3-81		
CASE	DE	DDE	HOSGR1	HOSGR1		
DATA POINT	—	—	—	—		
FORCE (LB)						
FORCE Y (LB)	114	114	456	194		
FORCE LH (LB)	228	228	127	171		
MOMENT (-LB)						
MOMENT (-LB)						
MOMENT (-LB)						
MVMT. (IN)						
MVMT. (IN)						
MVMT. (IN)						

TYPE OF ANALYSIS	THERMAL					
ANALYSIS NO.	N/A					
REV. NO./DATE						
CASE						
DATA POINT						
FORCE (LB)						
FORCE (LB)						
FORCE (LB)						
MOMENT (-LB)						
MOMENT (-LB)						
MOMENT (-LB)						
MVMT. (IN)						
MVMT. (IN)						
MVMT. (IN)						

FILE COPY

TYPE OF ANALYSIS	DEAD LOAD	TRIB. PIPE WT.
ANALYSIS NO.	44-3243	44-3243
REV. NO./DATE	10-23-81	10-23-81
DATA POINT	—	—
FORCE (LB)		
FORCE Y (LB)	-114	114
FORCE LH (LB)	0	114

SEE 5-398 FOR FILE 44 CALCS.

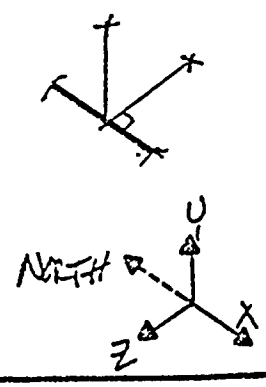

P. G. & E. CO.

REV.	DATE	DESCRIPTION OF CHANGE	BY	CHKD.	SH 2 OF 2	REV.
5	12-3-81	REVISED HOSGR1 INCREASE	RK	Z.T.		5
4	10-23-81	ADDED 44-3243 DATA ONLY	RK	D.Blu		

-1450 (3-80)

PROJECT. DC-1	LINE NO. 1 S1 985 12 III B	SEQ. NO. 2-541	56N / 2GR
FILE NO. 33	SYSTEM RHR INJECT HOT LEG 1+2	RESTR. Y	

TYPE OF ANALYSIS	SEISMIC					
ANALYSIS NO.	6-11		6-11	6-11		
REV. NO./DATE	4/7-2-73		5/10-19-81	6/12-1-81		
CASE	DE		HOSGR1	HOSGR1		
DATA POINT	20		20	20		
FORCE (LB)				–		
FORCE Y (LB)	567		IN	1182		
FORCE (LB)				–		
MOMENT (-LB)				–		
MOMENT (-LB)				–		
MOMENT (-LB)				–		
MVMT. X (IN)	0.001		0.004	0.003		
MVMT. Y (IN)	0		0	0		
MVMT. Z (IN)	0.001		0.004	0.003		

FILE COPY

TYPE OF ANALYSIS	THERMAL					
ANALYSIS NO.	88	88	88			
REV. NO./DATE	C/3-8-74	C/3-8-74	C/3-8-74			
CASE	NORMAL	ACCID	TEST			
DATA POINT	37	37	37			
FORCE (LB)						
FORCE Y (LB)	-368	-350	-20			
FORCE (LB)						
MOMENT (-LB)						
MOMENT (-LB)						
MOMENT (-LB)						
MVMT. X (IN)	0.718	0.709	0.065			
MVMT. Y (IN)	0	0	0			
MVMT. Z (IN)	4.465	4.272	0.267			

TYPE OF ANALYSIS	DEAD LOAD	TRIB. PIPE WT.
ANALYSIS NO.	6-11	6-11
REV. NO./DATE	0/10-3-81	11-18-77
DATA POINT	20	20
FORCE (LB)		
FORCE Y (LB)	-1678	1767
FORCE (LB)		

ANALYSIS NO.	6-11
REV. NO./DATE	1/12-1-81
DATA POINT	20
FORCE Y (LB)	-1662

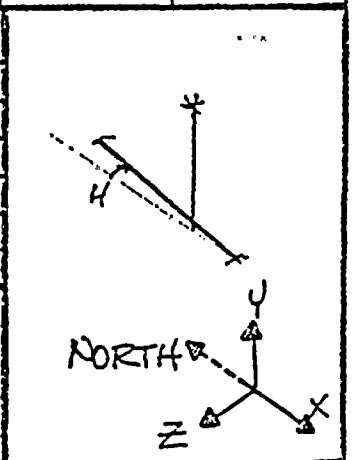

P. G. & E. CO.

REV.	DATE	DESCRIPTION OF CHANGE	BY	CHKD.
3	12-3-81	REVISED HOSGR1 & D.L. DECREASE	RK	Z.T.
2	10-20-81	REVISED HOSGR1 AND DEAD LOAD	RK	D.E.E.

SH 1 OF 1 — REV. 3

J-1450 (3-80)

PROJECT. DC-1	LINE NO. (1 S1 985 12 III B)	SEQ. NO. S-542
FILE NO. 33	SYSTEM RHR INJECT HOT LEG 1+2	RESTR. Y

56J / 78R

TYPE OF ANALYSIS	SEISMIC					
ANALYSIS NO.	6-11		6-11	6-11		
REV. NO./DATE	4/7-2-73		5/10-19-81	6/12-1-81		
CASE	DE		HOSGRI	HOSGRI		
DATA POINT	29		29	29		
FORCE (LB)				—		
FORCE Y (LB)	1206		2571	2392		
FORCE (LB)				—		
MOMENT (-LB)				—		
MOMENT (-LB)				—		
MOMENT (-LB)				—		
MVMT. X (IN)	0		0	0		
MVMT. Y (IN)	0		0	0		
MVMT. Z (IN)	0		0	0		

FILE COPY

TYPE OF ANALYSIS	THERMAL					
ANALYSIS NO.	88	88	88			
REV. NO./DATE	C/3-8-74	C/3-8-74	C/3-8-74			
CASE	NORMAL	ACCID	TEST			
DATA POINT	31	31	31			
FORCE (LB)						
FORCE Y (LB)	-3537	~~-3424~~	-312			
FORCE (LB)						
MOMENT (-LB)						
MOMENT (-LB)						
MOMENT (-LB)						
MVMT. X (IN)	0.779	0.663	-0.036			
MVMT. Y (IN)	0	0	0			
MVMT. Z (IN)	3.276	2.781	-0.157			

TYPE OF ANALYSIS	DEAD LOAD	TRIB. PIPE WT.
ANALYSIS NO.	6-11	6-11
REV. NO./DATE	Ø/10-3-81	11-18-77
DATA POINT	89	29
FORCE (LB)		
FORCE Y (LB)	-1635	1649
FORCE (LB)		

ANALYSIS NO.	6-11	
REV. NO./DATE	1/12-1-81	
DATA POINT	29	
FORCE Y (LB)	-1611	

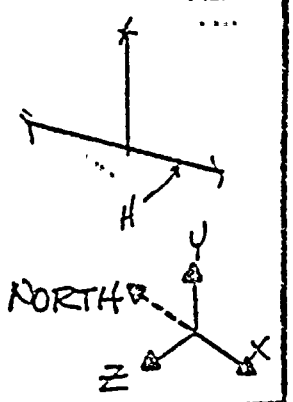

P. G. & E. CO.

REV.	DATE	DESCRIPTION OF CHANGE	BY	CHKD.
3	12-3-81	REVISED HOSGRI & D.L. DECREASED	RK	Z.T.
2	10-20-81	REVISED HOSGRI AND DEAD LOAD	RK	D.E.B.

SH 1 OF 1 — REV. 3

-1450 (3-80)

PROJECT. DC-1	LINE NO. 1 S1 985 12 III B	SEQ. NO. S-543
FILE NO. 33	SYSTEM RHR INJECT HOT LEG 1+2	RESTR. Y

5GN / 79R

TYPE OF ANALYSIS	SEISMIC					
ANALYSIS NO.	6-11		6-11	6-11		
REV. NO./DATE	4/7-2-73		5/10-19-81	6/12-1-81		
CASE	DE		HOSGR1	HOSGR1		
DATA POINT	25		25	25		
FORCE (LB)						
FORCE Y (LB)	783		1224	1393		
FORCE (LB)						
MOMENT (-LB)						
MOMENT (-LB)						
MOMENT (-LB)						
MVMT. X (IN)	0.010		0.018	0.018		
MVMT. Y (IN)	0		0	0		
MVMT. Z (IN)	0.016		0.029	0.028		

FILE COPY

TYPE OF ANALYSIS	THERMAL					
ANALYSIS NO.	88	88	88			
REV. NO./DATE	C/3-8-74	C/3-8-74	C/3-8-74			
CASE	NORMAL	ACCID	TEST			
DATA POINT	33	33	33			
FORCE (LB)						
FORCE Y (LB)	1252	1214	91			
FORCE (LB)						
MOMENT (-LB)						
MOMENT (-LB)						
MOMENT (-LB)						
MVMT. X (IN)	1.127	1.118	0.108			
MVMT. Y (IN)	0	0	0			
MVMT. Z (IN)	4.701	4.358	0.141			

TYPE OF ANALYSIS	DEAD LOAD	TRIB. PIPE WT.
ANALYSIS NO.	6-11	6-11
REV. NO./DATE	0/10-3-81	11-18-77
DATA POINT	25	25
FORCE (LB)		
FORCE Y (LB)	-1620	1514
FORCE (LB)		

ANALYSIS NO.	6-11	
REV. NO./DATE	1/12-1-81	
DATA POINT	25	
FORCE Y (LB)	-1642	

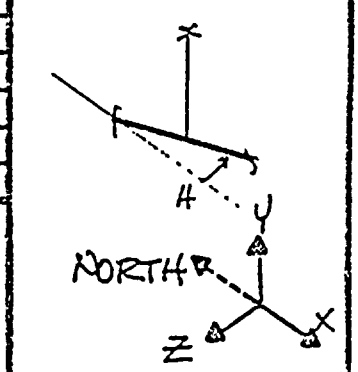

P. G. & E. CO.

REV.	DATE	DESCRIPTION OF CHANGE	BY	CHKD.
3	12-3-81	REVISED HOSGR1 & D.L INCREASE	RK	Z.T.
2	11-20-81	REVISED HOSGR1 AND DEAD LOAD	RK	D.F.B

SH 1 OF 1 — REV. 3

-1450 (3-80)

PROJECT. DC-1	LINE NO. 1 S1 985 12 III B	SEQ. NO. S-383	57N / 10R
FILE NO. 33	SYSTEM RHR INJECT HOT LEG 1+2	RESTR. LH	

TYPE OF ANALYSIS	SEISMIC					
ANALYSIS NO.	6-11		6-11	6-11		
REV. NO./DATE	4/7-2-73		5/10-19-81	6/12-1-81		
CASE	DE		HOSGR1	HOSGR1		
DATA POINT	54,55		55	55		
FORCE (LB)				—		
FORCE (LB)				—		
FORCE LH (LB)	2907		5866	6564		
MOMENT (-LB)				—		
MOMENT (-LB)				—		
MOMENT (-LB)				—		
MVMT. X (IN)	0		0	0.00		
MVMT. Y (IN)	0.216		0.314	0.361		
MVMT. Z (IN)	0		0	0		

FILE COPY

TYPE OF ANALYSIS	THERMAL					
ANALYSIS NO.	88	88	88			
REV. NO./DATE	C/3-8-74	C/3-8-74	C/3-8-74			
CASE	NORMAL	ACCID	TEST			
DATA POINT	3	3	3			
FORCE (LB)						
FORCE (LB)						
FORCE LH (LB)	-4379	-2299	+1629			
MOMENT (-LB)						
MOMENT (-LB)						
MOMENT (-LB)						
MVMT. X (IN)	-0.284	0.938	1.193			
MVMT. Y (IN)	0.012	0.460	0.449			
MVMT. Z (IN)	-0.004	0.014	0.018			

TYPE OF ANALYSIS	DEAD LOAD	TRIB. PIPE WT.
ANALYSIS NO.	N/A	6-11
REV. NO./DATE		11-18-77
DATA POINT		54
FORCE (LB)		
FORCE (LB)		
FORCE LH (LB)		4695

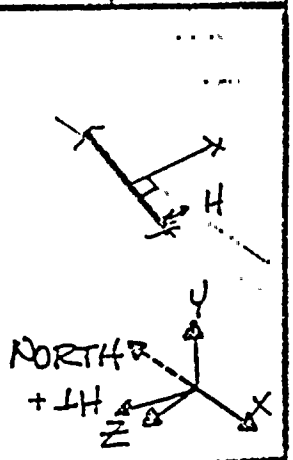

P. G. & E. CO.

REV.	DATE	DESCRIPTION OF CHANGE	BY	CHKD.
5	12-3-81	REVISED HOSGR1 INCREASE	RK	Z.T.
4	10-20-81	REVISED HOSGR1 AND DEAD LOAD	RK	D.E.E.

SH 1 OF 1 — REV. 5

J-1450 (3-80)

PROJECT. DC-1	LINE NO. 1 S1 985 12 III B	SEQ. NO. S-518
FILE NO. 33	SYSTEM RHR INJECT HOT LEG 1+2	RESTR. Y

51N / 151R

TYPE OF ANALYSIS	SEISMIC					
ANALYSIS NO.	6-11		6-11	6-11		
REV. NO./DATE	4/7-2-73		5/10-19-81	6/12-1-81		
CASE	DE		HOSGRI	HOSGRI		
DATA POINT	37		37	37		
FORCE (LB)				—		
FORCE Y (LB)	784		1483	1461		
FORCE (LB)				—		
MOMENT (-LB)				—		
MOMENT (-LB)				—		
MOMENT (-LB)				—		
MVMT. X (IN)	0.290		0.449	0.488		
MVMT. Y (IN)	0		0	0		
MVMT. Z (IN)	0.270		0.414	0.452		

FILE COPY

TYPE OF ANALYSIS	THERMAL					
ANALYSIS NO.	88	88	88			
REV. NO./DATE	C/3-8-74	C/3-8-74	C/3-8-74			
CASE	NORMAL	ACCID	TEST			
DATA POINT	22	22	22			
FORCE (LB)						
FORCE Y (LB)	3038	2276	51			
FORCE (LB)						
MOMENT (-LB)						
MOMENT (-LB)						
MOMENT (-LB)						
MVMT. X (IN)	0.248	0.154	-0.069			
MVMT. Y (IN)	0	0	0			
MVMT. Z (IN)	2.079	1.595	-0.270			

TYPE OF ANALYSIS	DEAD LOAD	TRIB. PIPE WT.
ANALYSIS NO.	6-11	6-11
REV. NO./DATE	0/10-3-81	11-18-77
DATA POINT	37	37
FORCE (LB)		
FORCE Y (LB)	-1712	1585
FORCE (LB)		

ANALYSIS NO.	6-11	
REV. NO./DATE	1/12-1-81	
DATA POINT	37	
FORCE Y (LB)	-1751	

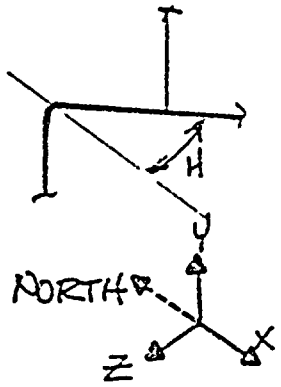

P. G. & E. CO.

REV.	DATE	DESCRIPTION OF CHANGE	BY	CHKD.
4	12-3-81	REVISED HOSGRI & D.L. INCREASED	RK	Z.T.
3	10-20-81	REVISED HOSGRI AND DEAD LOAD	RK	D.E.B.

SH 1 OF 1 — REV. 4

-1450 (3-80)

PROJECT. DC-1	LINE NO. 1 S1 985 12 III B	SEQ. NO. S-430	57N / 152R
FILE NO. 33	SYSTEM RHR INJECT HOT LEG 1+2	RESTR. Y, LH	

TYPE OF ANALYSIS	SEISMIC					
ANALYSIS NO.	6-11		6-11	6-11		
REV. NO./DATE	4/7-2-73		5/10-19-81	6/12-1-81		
CASE	DE		HOSGRI	HOSGRI		
DATA POINT	41, 42		41	41		
FORCE (LB)				—		
FORCE Y (LB)	2357		3374	2934		
FORCE LH (LB)	1331		2751	3094		
MOMENT (-LB)				—		
MOMENT (-LB)				—		
MOMENT (-LB)				—		
MVMT. X (IN)	0.033		0.057	0.064		
MVMT. Y (IN)	0		0	0		
MVMT. Z (IN)	0.047		0.080	0.089		

TYPE OF ANALYSIS	THERMAL					
ANALYSIS NO.	88	88	88			
REV. NO./DATE	C/3-8-74	C/3-8-74	C/3-8-74			
CASE	NORMAL	ACCID	TEST			
DATA POINT	19, 20	19, 20	19, 20			
FORCE (LB)						
FORCE Y (LB)	-622	-155	402			
FORCE LH (LB)	3375	4035	1008			
MOMENT (-LB)						
MOMENT (-LB)						
MOMENT (-LB)						
MVMT. X (IN)	-0.574	-0.375	0.140			
MVMT. Y (IN)	0	0	0			
MVMT. Z (IN)	0.704	0.459	-0.172			

TYPE OF ANALYSIS	DEAD LOAD	TRIB. PIPE WT.
ANALYSIS NO.	6-11	6-11
REV. NO./DATE	0/10-3-81	11-18-77
DATA POINT	41	41, 42
FORCE (LB)		
FORCE Y (LB)	-1605	2259
FORCE LH (LB)		2951

ANALYSIS NO.	6-11
REV. NO./DATE	1/12-1-81
DATA POINT	41
FORCE Y (LB)	-1486

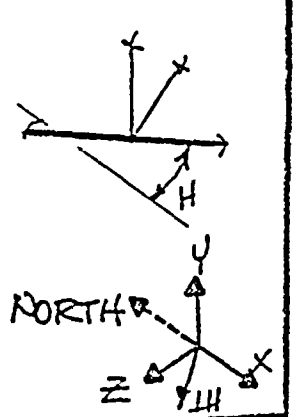

P. G. & E. CO.

REV.	DATE	DESCRIPTION OF CHANGE	BY	CHKD.
5	12-3-81	REVISED HOSGRI & D.L DECREASE	RK	Z.T
4	10-20-81	REVISED HOSGRI AND DEAD LOAD	RK	D.E.B.

SH 1 OF 1 — REV. 5

-1450 (3-80)

PROJECT. DC-1	LINE NO. 1 S1 985 12 III B	SEQ. NO. H-1290
FILE NO. 33	SYSTEM RHR INJECT HOT LEG 1+2	RESTR. SPRING

57N / 153V

TYPE OF ANALYSIS	SEISMIC					
ANALYSIS NO.	6-11		6-11	6-11		
REV. NO./DATE	4/7-2-73		5/10-19-81	6/12-1-81		
CASE	DE		HOSGR1	1+OSGR1		
DATA POINT	49		49	49		
FORCE (LB)				—		
FORCE (LB)				—		
FORCE (LB)				—		
MOMENT (-LB)				—		
MOMENT (-LB)				—		
MOMENT (-LB)				—		
MVMT. X (IN)	0.118		0.202	0.217		
MVMT. Y (IN)	0.296		0.427	0.449		
MVMT. Z (IN)	0.028		0.061	0.075		

FILE COPY

TYPE OF ANALYSIS	THERMAL					
ANALYSIS NO.	88	88	88			
REV. NO./DATE	C/3-8-74	C/3-8-74	C/3-8-74			
CASE	NORMAL	ACCID	TEST			
DATA POINT	13	13	13			
FORCE (LB)						
FORCE (LB)						
FORCE (LB)						
MOMENT (-LB)						
MOMENT (-LB)						
MOMENT (-LB)						
MVMT. X (IN)	-0.480	0.446	0.877			
MVMT. Y (IN)	-0.074	0.247	0.313			
MVMT. Z (IN)	0.143	0.033	-0.095			

TYPE OF ANALYSIS	DEAD LOAD		TRIB. PIPE WT.
ANALYSIS NO.	6-11	6-11	N/A
REV. NO./DATE	Ø/10-3-81	1/12-1-81	
DATA POINT	49	49	
FORCE (LB)		—	
FORCE Y (LB)	-1877	-2216	
FORCE (LB)		—	

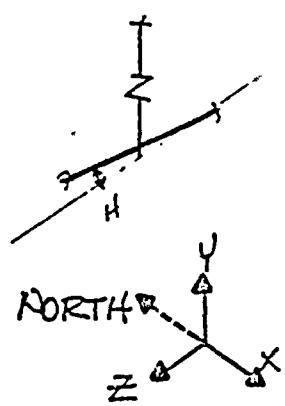

P. G. & E. CO.

REV.	DATE	DESCRIPTION OF CHANGE	BY	CHKD.
4	12-3-81	REVISED HOSGR1 & D.L. INCREASED	RK	Z.T.
3	10-20-81	REVISED HOSGR1 AND DEAD LOAD	RK	D.E.3

SH 1 OF 1 REV. 4

ITEM I

CONTAINMENT PENETRATION ALLOWABLES

PACIFIC GAS AND ELECTRIC COMPANY

MECHANICAL AND NUCLEAR ENGINEERING DEPARTMENT

Subject: Diablo Canyon Unit 1
Containment Penetration Allowables at Penetration 26

MADE BY: _____ DATE: 11-18-81

CHECKED BY: _____ DATE: 11-19-81

APPROVED BY: _____ DATE: 11/19/81

Approximate maximum allowable loads for inside containment side of flued head:

SSE CONDITION (HOSGRI)

F_{AXIAL} = 145,000 lbs.

F_{SHEAR} = 145,000 lbs.

$M_{TORSION}$ = 2,500,000 in-lbs.

$M_{BENDING}$ = 3,800,000 in-lbs.

Note: Allowable loads are determined by subtracting loads from outside end of penetration from ARMCO Stress Report allowables for the flued head.

Source: Flued Head Review, File No. 122.61

ITEM J

PIPING SCHEMATIC DIAGRAMS

PIPING & INSTRUMENTATION DIAGRAMS (P & ID)

ITEM J

010201

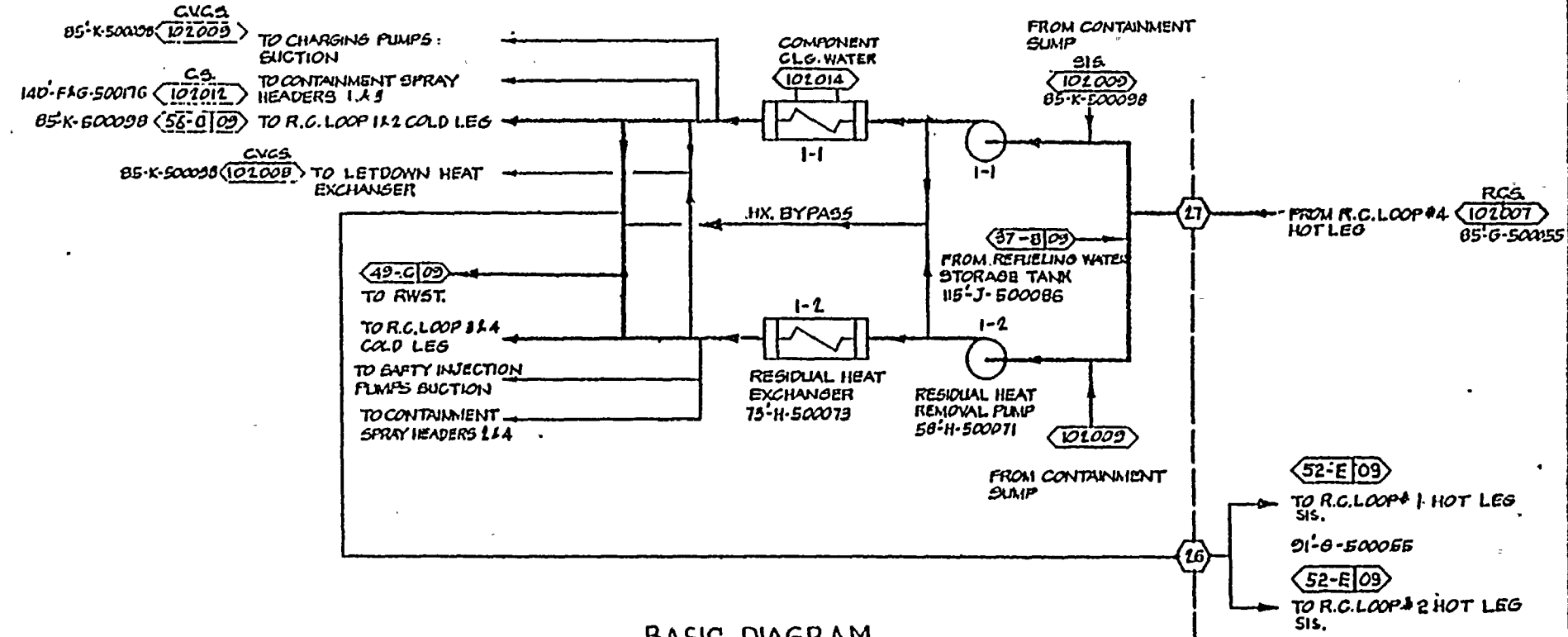

BASIC DIAGRAM

ELEV.	AREA	MECH.-DWG. NO. UNIT 1	MECH.-DWG. NO. UNIT 2
58	H	500071	500921
85-91	G	500055	500905
73	H	500073	500923
85	K	500098	500948
115	J	500086	500936
140	F & G	500176	501510

DD UNIT SUPVR.	6		
ELECTRICAL			6 JC/RWD
APPROVED BY ENGR.	CHANGE NUMBER & ENGINEER		
PIPING	2	3	4 5 6
INSTRUMENT	2	3	4 5 6
SYSTEMS	2	3	4 5 6
PROJ./CHIEF	2	3	4 5 6

35 MM Rev. 16

UNITS 1 & 2 RM INDEXED REV 6 COAST VALLEYS DIVISION

REGISTERED PROFESSIONAL ENGINEER D. V. KELLY No. 9209 MECHANICAL STATE OF CALIFORNIA

NO	DATE	DESCRIPTION	GM	BY	CH.
6	10-31-80	REV'D ALL SHEETS SEE SH. 6 FOR DETAILS	169027	J.Z.B.	TO
5	5-3-78	SEE DESCRIPTION OF CHANGES SH. 2A	169978	R.C.	CV
4	6-22-76	SEE DESCRIPTION OF CHANGES SH. 2	169972		CV/LM
3	2-6-76	SEE DESCRIPTION OF CHANGES SH. 2	169972	J.M.	L.M.
2	5-22-74	SEE DESCRIPTION OF CHANGES SHT. 2	169972	J.M.	L.M.
1	5-17-72	APPROVED FOR CONSTRUCTION	169972	LPB	HGG

TABLE OF CHANGES

APPROVED BY — APPRD LEAD ENGR

GM 169972
SUPV. BY J.K. Dodson
DSGN. C. Kwok
DR. K. HORVATH
CH. L. MAWALBC
O.K.
DATE 4-3-68
SCALES None

PIPING SCHEMATIC
RESIDUAL HEAT REMOVAL SYSTEM
DIABLO CANYON

DEPARTMENT OF ENGINEERING
PACIFIC GAS AND ELECTRIC COMPANY
SAN FRANCISCO, CALIFORNIA

BILL OF MATERIAL
DRAWING LIST
SUPERSEDES
SUPERSEDED BY
SHEET NO. 1 OF 6 SHEETS

DRAWING NUMBER 102010 CHANGE

INSTR. CHECK Em.Valeriano 4/1/76 | LINE CHECK RS KERSTEN 4/6/76 | VALVE CHECK RS KERSTEN 4/6/76 | SYSTEMS CHECK Em.Valeriano 4/8/76

20	21	22	23	24	25	26	27	28	29

SYSTEM OR EQUIPMENT	DESCRIPTION	CO ORDINATES
	CHANGE 01-ISSUED FOR INFORMATION IND DP & JVR	
	CHANGE 02 BY HCC/JHO/GAA JUNE 10, 1969	
BASIC DIAGRAM	REVISED ADDED,DELETED AS LISTED BELOW	SHEET 1
CONTAINMENT RECIRC. SUMP OUTLETS	ADDED-TO SYSTEM	34-(B-C)
RECIRCULATION LINE NO 224	ADDED-TO SYSTEM	36 C
RHR PPS.DISCH.TO REFUEL.WTR.STOR.TK	DELETED FROM SYSTEM	27 C
CONTAINMENT SPRAY HEADER LINES	ADDED-TO SYSTEM	31-D & 31-E
	CHANGE 03 BY HCC/JHO/GAA 11-3-69	
	ISSUED FOR PIPING SPECS 8711, MECH. EQUIP. INSTALL 8735, ERECTION OF REFR., GEN. 8751, NUCLEAR STEAM SUPPLY SYSTEM 8752.	
	CHANGE 04 BY EAP/AG/HEZ 1-15-70	
INSTRUMENT SYD. SYMBOLS	REVISED TE TO TS & TI; FE TO FT	SHEET 3
FE 02 & 03	ADDED TO SYSTEM	35(D C)
FCV 603 & 602	REVISED FROM MANUAL TO MOTOR OPERATED	33(E D)
LINE 114 & 115	ADDED TO SYSTEM	35(E-C)
FE 49 & 147	DELETED FROM SYSTEM	34(E-D)
LINE 930 & 931	REVISED-LINE SIZE FROM 8" TO 3"	SHEET 3
PE 231 & 22	DELETED FROM SYSTEM	34(D C)
NOTES 5 & 6	ADDED-TO SHEET 3	
PITOT TUBES	ADDED TO SYSTEM	35(D C)
3" x 2" REDUCER	ADDED-TO LINE 930 & 931	SHEET 3
	CHANGE 05 BY HP/AG/HEZ MAY 1, 1970	
BASIC DIAGRAM	ADDED QUALITY ASSURANCE CODE CLASS	SHEET 1
QUALITY ASSURANCE	ADDED CODE CLASS TO LINES	SHEET 3
RESIDUAL HT EXCHANGER LOCAL SAMPLE	REVISED FROM RES. HT. INLET TO OUTLET	32-D & 32C
INSTRUMENT NUMBER	REVISED P G & E. NUMBER TO WESTING-HOUSE	SHEET 3
CHECK VALVE	DELETED FROM SYSTEM	30 E
	CHANGE 06 BY HP/HCG/HEZ JULY 2, 1970	
RHR PUMPS	REVISED-THE FOLLOWING SUCTION, DISCH., AND RECIRC. VALVES ARE CHANGED TO LOCKED DISC. GATE VALVE	
	8701	38 C
	8702	38 C
	8716 A&B	31 D & C
	8724 A&B	34 D & C
	8726 A&B	34 D & C
	8728 A&B	35 D & C
	8741	31-D
RHR PP DISCH. TO CHARG PP SUCT.	ADDED TO SYSTEM (LINE #1972)	30 E
RHR PUMP 1 & 2 RECIRC.	REVISED VALVES 2-TH 50 FN WAS 2-TH 50S	33-E & B
RHR PUMP 1 & 2	DELETED CHANNELS 1-T1A-643 & 1-T1A-644	34 D & C IN CHANGE-05
RHR 1 & 2 SUCTION	ADDED PRESSURE INDICATORS 631 & 632	34 D & C
RHR HOT LEG RV DISCHARGE (1167)	REVISED QUALITY ASSURANCE CODE C IS CHANGED TO E	31 A
RHR COLD LEG RV DISCHARGE (1104)	REVISED QUALITY ASSURANCE CODE C IS CHANGED TO E	37-C
NOTES 5 & 6	ADDED-TO SYSTEM	34-E
	CHANGE 07 BY HP/ACG/HEZ AUGUST 10, 1970	
RHR STATOR WINDING TEMP.DETECTOR & CONVERTER NO.	ADDED TO SYSTEM	SHEET 8
WESTINGHOUSE VALVE NUMBER	ADDED LINE NUMBER 2345 2346 2347-2348 2349 2350 2351-2352-2341-2325-2523 2524	SHEET-3
8804-A HCV-637 8720A; HCV 636 8724A 8726B; HCV-670 8724B 8700A; 8AXB 8701 8702	STEM LEAK OFF	
RHR TO CHARGE PUMP RECIRC LINE DRAIN	ADDED LINE NUMBER S2-2344-3/4"	30 D
RHR COLD LEG RV OUTLET LINE NO 1167	REVISED QUALITY ASSURANCE & SIZE WAS E WAS-3/4"	31-A
RHR HOT LEG R.V. OUTLET LINE NO.1104	REVISED QUALITY ASSURANCE & SIZE WAS E WAS-3"	37 C

SYSTEM OR EQUIPMENT	DESCRIPTION	CO ORDINATES
NOTE 7	ADDED-TO SYSTEM	39 D
RHR PUMP 1-1 & 1-2 SEAL WATER SYSTEM	ADDED-TO SYSTEM	SHEET 4
RHR PP DISCH.TO CHARG PP SUCTION	DELETED FROM SYSTEM (LINE #1972) RELOCATED TO P & ID 102030	SHEET 3
	CHANGE 08 BY LPB/HCG/HEZ APRIL 20, 1971	
DESIGN CODE CLASS TABLE	DELETED-TRANSFERED TO 102001 SHEET 1	SHEET 1
BASIC DIAGRAM	REVISED-IN CONNECTION WITH SHEET 3-#5	SHEET 1
LOOP 4 HOT LEG RECIRC.	ADDED-LINE NO.1665 TEST VENT	39 C 38-C
	REVISED-VALVE 1-8701 & 1-8702 WAS 14 CHG8 SIZE	39-C
REFUELING WTR.TO RESIDUAL HT.REMOVAL PPS	REVISED-TRANSFERED LINE 2011 TO 102008	37-C
RESIDUAL HT.REMOVAL PPS SUCH.	ADDED PRESSURE CONNECTION (PX 394 & 395)	34 C/D
RESIDUAL HEAT EX-CHANGERS	DELETED-LOCAL SAMPLE LINE 1638 & 1639 NO.	32 B/D
	REVISED-TRANSFERED DRAIN LINE 1669 & 1670 TO 102014	33 C/E
	ADDED-LINE CODE CLASS AND NOTE 8	33 C/G
RECIRCULATION TO CHARGING PPS SUCTION HEADER	REVISED TRANSFERED LINE 734 & 2344 TO 102009	31-E
RECIRC.LINE TO RWST	REVISED-TRANSFERED LINE 224 TO (40 A-09)	32-D
INJECTION COLD LEG 3 & 4	ADDED-TEST VENT VALVE LEAK-OFF LINE 1821	39 D
REDRAWN	REVISED SHEET 3	SHEET 3
RESIDUAL HEAT EX-CHANGER INJECTION COLD LEG 3 & 4	REVISED-LINE 2575,2576,120,905,1669,1661 & 1667 WAS IIP	SHEET 3
	ADDED NOTE 7	32-A
RESIDUAL HEAT REMOVAL PUMP DISCHARGE	REVISED LINE DRAIN 1671 & 1672 WENT TO RES HT.REMOVAL SUMP & PUMP	35 B/D
	ADDED-LOCAL SAMPLE LINE 2050 & 2577	35 B/D
	INSTRUMENT INSTALL SPEC. ISSUED FOR BID 8602, MAY 10, 1971	
	CHANGE 09 DECEMBER 14 1971, BY LPB/HCG	
BASIC DIAGRAM	REVISED-REDRAWN COVER SHEET	SHEET 1
RESIDUAL HEAT REMOVAL PUMP'S SUCTION	ADDED-THERMAL EXPANSION LINES 3094, 3095,3096,3097	38-C
	VALVES 8710,A&B, 8706 A&B FLUSHING CONN LINE NO.3211 & 3162	34-C 37-C/E
	REVISED-INSULATION ON LINES 927,225,110, 111,930,& 931 WAS "IIP".	36-C
	PI631 & 632 WAS PX 394 & 395	34-D/B
	PGAE CLASS ON LINE 114 & 115 WAS [K]	36-E/C
RESIDUAL HEAT REMOVAL PP	REVISED-REDUCER ON DRAINS LINE WAS 3/4 x 1/2	36 D/B
RESIDUAL HEAT REMOVAL PUMP'S DISCHARGE	ADDED THERMAL EXPANSION LINES 3260,3261, 3408,3409,3258 & 3259	34-D/C
	VALVES 8719 A&B,8720 A&B,8711 A&B VALVE LEAK-OFF LINES 3216 & 3217	34 D/C 34 C
	LOCAL DRAIN LINE'S 3795 & 3796	34 E/B
	REVISED-FLOW ELEMENT WAS ELBOW TAPS (FE 641 A&B)	35-D/B
	NOTE 9 WAS NOTE 2	35-D/B
	INSULATION ON LINES 112,113,1663 1661 WAS "IIP"	34 D-B
	TRANSFERED VALVE 8725 A&B FROM AFTER HEAT EXCH.	34-E/B
RESIDUAL HEAT EXCH'S OUTLET	ADDED-ROOT VALVE (3/4-758) ON LINE 1664 & 1665 TO SAMPLE SYS.	32-E/B
	THERMAL EXPANSION LINES 3632,3633 & 3090	30-D/C
	VALVE 8715 A&B, 8712	30 D/C
	NOTE 10	31-C/D
	VALVE LEAK-OFF LINES 3211,3212, & 3213	30-D/C
	REVISED-INSULATION ON LINES 110,119,2050 2577,1971,735,279,260,1521,1660 "IIP".	31-B/C/D
	INSULATION ON LINES 1661,1669,905 & 120 WAS "SPL"	32-E
	NOTE 7 WAS BEFORE SECOND VALVE	30 A/B
	LINE 1667 WAS CONN BEFORE LINE 1661	30 D
	LINE 905 WAS CONN AFTER LINE 1661	30-D

SYSTEM OR EQUIPMENT	DESCRIPTION	CO ORDINATES
	LINE 110 & 119 WENT TO HOT LEG	30 D/B
	LINE 2575 & 2576 WENT TO COLD LEG	39-A/B
	DELETED-VALVE LEAK OFF LINE 1621 ON VALVE 8703	39 B
	CHANGE 1 MAY 12, 1972 BY BWG/DUDMAN/LAVERTY	
RESIDUAL HEAT EXCHS DISCH.	ADDED-TEMP ELEMENT (TE649) LINE NO.3551	30 B 32 D
	REVISED LINE 1662 WAS CONN BEFORE LINE 735	32-B
	LINE 1662 WAS CONN BEFORE LINE 219	32 D
	LINE 1971 WAS CONN TO LINE 110	32-D
	TEMP. ELEMENT WAS CONN ON LINE 905	30-C
	VALVE 8716A & B WAS B CS4	30-C
	VALVE 8716A & B WAS SHOWN OPEN	30-C
	FIC 641A/B LINE S1-1/2 WAS 3/4	35 B/D
	DELETED-LOCAL SAMPLE LINES NO.2577 & 2050	32 B/D
RESIDUAL HT.EXCH. TO REACTOR COOLANT LOOPS 1 & 2 HOT LEG	ADDED-TEST LINE 3465, LINE 3454	31-B 31-B
	REVISED-INSULATION ON LINE 905 WAS IIL	34 E/B
	LINE 2576 WENT TO LOOP 3	
	LINE 2575 WENT TO LOOP 4	39 B
	DELETED INSULATION ON LINE 2575,2576 & 120	30-A/B
LOOP 4 HOT LEG RECIRC.	REVISED PGAE CLASS ON LINE 3094 & 3095 WAS [B]	39 C
PUMP ROOM OVERFLOW	ADDED-INSULATION (III P) ON LINE 114 & 115	36 C/B
VALVE LEAK OFF TO MISC.EQ DR.TK.	ADDED-INSULATION [II] P ON LINES 2346,2347, 3213,3212,2348,2350,3210,3217,2349, 2351,2352,2341,2325,2523 & 2524	SHEET 3
R.H. REMOVAL PUMPS	ADDED BELLOWS SENSOR ON FIC 641 A & B	35-C/E
	CHANGE 2 BY HEIMAN/WAHLAC/ROTHIDEZ LAST ENGINEERING CHANGE ADDED 8-10-74	
RHR. INJECTION TO HOT LEGS	REVISED THE ELBOW TAPS SIZE (10 VALVES MG 8716A & 8716B) FROM 1/2" TO 3/4"	30 A,B
	ADDED-NOTE 11 TO VALVE 8716A & 8716B	30 B,C
	REVISED RHR REMV. RELIEF LINE 3632 FROM LINE 2450 TO 110 ON UNIT 2 ONLY	30-D
	ADDED VENT WITH 3/4-778 VALVE ON BY PASS LINE 1521	31-D
	ADDED LOW POINT DRAIN WITH 3/4-758 VALVE ON BY PASS LINE 1662	32-C
	DELETED INSULATION III P FROM LINE 224	31 C
RHR. TO SIS, PPS. & CONTAINMENT SPRAY	REVISED THE INSULATION OF LINE 735 FROM [II] TO [II]P	32 B
RHR. PPS. LOCAL SAMPLE	REVISED THE INSULATION OF LINE 3795 & 3796 FROM [II] TO [II]P	34 E,B
	ADDED LOW POINT DRAIN LINES S2-4299-3/4 & S2-4300-3/4 TO LOCAL SAMPLE LINES 3795 & 3796 WITH (2) 3/4-758 VALVE AND SPEC & CLASS CHANGE	34 E,B
RHR HEAT EXCHANGER	ADDED CODE CLASS C TO VENT LINES (NOZZLE 08)	33 E,C
CHARGING PP'S SUCTION HEADER	REVISED-THE INSULATION OF LINE 1971 FROM [II] TO [II]P	33 E
RHR INJ. LINE	ADDED VENT CONN. WITH 3/4-758 VALVE ON LINE 905	33 B 30 B
RHR. PP'S	ADDED CIRCULATION SEAL WTR VENT TO RHR PUMP'S WITH 3/4 750 VALVE	34 E,C
	ADDED PUMP'S SEAL DRAIN LINES S2-4301-1/2 & S2 4302-1/2 WITH 1/2-758 VALVES AND SPEC & CLASS CHANGE	34 B,B
	REVISED-THE SPEC. OF LINE S-1 [II] TO S1-1[II] AT CASING DR.	34 B
	ADDED-SPEC. CHANGE ON LINES 2592 & 2593	34 D,B
	ADDED NOTE 10 TO FLUSHING SPOOLS ON RHR. PP'S INLET	37 D,B
CONT RECIRC. SUMP	REVISED PIPE SPEC. OF LINE S 831 TO S1 831	37 B
RHR. LOOP 4 HOT LEG RECIRC.	ADDED VENT CONN. TO LINE 827 WITH 3/4-758 VALVE UNIT "1" ONLY	37 D
	ADDED NOTE 1 TO VALVE 8701	38 C
	ADDED VER DR. LINE NO S2-4307-3/4 WITH 3/4 758 VALVE AND SPEC & CLASS CHANGE	38 C
	ADDED VENT CONN TO LINE 109 WITH 2 PCS. 3/4 -758 VALVE	39 D
	ADDED VENT CONN TO LINE 1665 WITH 2 PCS. 3/4 -758 VALVE	39 D 39 D
	REVISED THE INSULATION OF LINE 3094 FROM [II] TO [I]	39 C

SYSTEM OR EQUIPMENT	DESCRIPTION	CO ORDINATES
RHR INJECTION TO HOT LEG	ADDED 1 C FUNCTION TO T V. ON LINE 905	30 B
REFUEL WTR. STG TK RETURN RHR RECIRC LINE 224	DELETED REMV. RELIEF LINE S1-3096-W-375-3/4 [II] WITH VALVE 8712 3/4-758 AT VALVE 8741 (E C O. W-3781)	31 C
RHR. PP. ROOM SUMP OVERFLOW	DELETED INSULATION [II] P ON LINE 114 & 115	36 E,C
RHR PP'S	ADDED PP MOTOR INSTRUMENTATION TIC'S, TE'S AND LE'S (E C O. W 115)	W 115 SHT 8
	CHANGE 3, 2-6-75 BY HEIMAN, WAHLAC, LEPPKE LAST ENGINEERING CHANGE ADDED 1-21-75	
RHR. X-TIE LINE 1662	REVISED DRAIN CONN. LOCATION DOWNSTREAM OF VALVE 8734A WAS UPSTREAM OF LINE NO. 1521 (PULLMAN MEMO NO 204)	32-D
RESIDUAL HT. RMV. PP 1&2 RECIRC LINE 930 & 931	REVISED VALVE FCV-641 A&B FROM NORM. OPEN TO NORM. CLOSED (SEE DC 663217-5 B)	34 B,E
"ALLOYCO" VALVES THERM. EXP. LINES	REVISED-THERM EXP. LINE CONN. ON LINES 3260, 3261, 3258, 3259, 3408, 3409 (TO AGREE WITH AREA DWG NO. 500072,012)	34,35-D C,B
	REVISED VALVE 8726B FROM "ALLOYCO" TO "CRANE" AND DELETED LINE NO. S1-3261-3/4 [II] INCLUDING 8719B 3/4-758 VALVE FOR UNIT "2" ONLY ((CO M690)	35 B
	ADDED NOTE NO 12	33 A
RESIDUAL HEAT REMOVAL PPS. 1&2	REVISED RHRS-PPS. SHAFT SEAL DRAIN VALVE FROM 1/2-758 TO 3/4-758 ((CO M650)	36 D,B
	REVISED VENT CONN. ON PP. IS NOW SHOWN ON SHT. 4 FOR CLARITY	36 D,B
	REVISED PT-633 & PT-647 LOCATION ((CO M 760)	36 D,B
	ADDED-VENT CONN. TO LINE NO. 3241 & 3102 UNIT "1" ONLY ((CO M650)	37-D,B
RHR. INJ LINE TO HOT LEG 1&2	REVISED DESIGNATION OF VENT CONN. ON LINE 905 FROM UNIT "1" TO UNIT "2" (MC WILLARD MEMO NO. 194)	30 B
RESIDUAL HEAT REMOVAL SYS.	ADDED-SHIELD WALL PENETRATION SYMBOLS (TO AGREE WITH AREA DWGS.)	SHT. 3
RESIDUAL HEAT REMOVAL PP. SEAL PIPING	REVISED-3/4-758 VENT VALVE NOW SHOWN ON SEAL COOLING WTR. PIPING WAS SHOWN ON PUMP IN SHT. 3	42-D
RESIDUAL HEAT REMOVAL PP.	REVISED MOTOR STATOR TEMP. ANALOG INPUT NOS. T0659A (WAS TO 6594) & T0665A (WAS TO 6654) (CORRECTING ERROR)	84 C 54,59 D
	CHANGE 4 6-22-1976 BY HERSTMANN/ WILLING DYSEN/WEIN LEITE	
RESIDUAL HEAT EXCHANGER 1-2 OUTLET	REVISED-LINE S1-735 & CONNECTION TO LINE S1-119-8 WAS OUTSIDE SHIELD WALL PENETRATION (PER AREA DWG 500074 & 500024)	32-D
	REVISED-LOCATION OF TI-660 ON LINE S1-119-8 WAS UPSTREAM OF RHR RECIRC. LINE S1-931-3 CONNECTION (PER AREA DWG 500013 & 500023)	32-D
	DELETED-SHIELD WALL PENETRATION SYMBOL FROM RHR RECIRC. LINE S1-931-3 & RESIDUAL HEAT EXCHANGER 1-2 VENT (PER AREA DWG 500002 & 500032)	32-D 33-C
RESIDUAL HEAT EXCHANGER	REVISED-14"x8" REDUCER NOW SHOWN CONNECTED TO NOZZLE NO. 1 OF R.H. EXCH 1-1, 1-2 AND NOZZLE NO. 2 OF R.H. EXCH 1-2 WERE SHOWN WITH PIPE CONNECTION (PER AREA DWG 500002 & 500032)	33-B & D
RESIDUAL HEAT EXCHANGER 1-1	REVISED-LOCATION OF TI-629 ON LINE S1-118-8 WAS UPSTREAM OF RHR RECIRC LINE S1-930-3 CONNECTION (PER AREA DWG 500013 & 500023)	32 D
	DELETED-SHIELD WALL PENETRATION SYMBOL FROM RHR RECIRC LINE S1-930-3 & FROM VENT ON RESIDUAL HEAT EXCHANGER (PER AREA DWG 500002 & 500032)	32 D 33-E

RM NODXED REV 6 CONTINUE ON SHT 6

P. G. & E. CO.	DRAWING NO.	CHANGE
SHEET 2 OF 6 SHEETS	102010	6

35 MM NEG 6

E D C B A

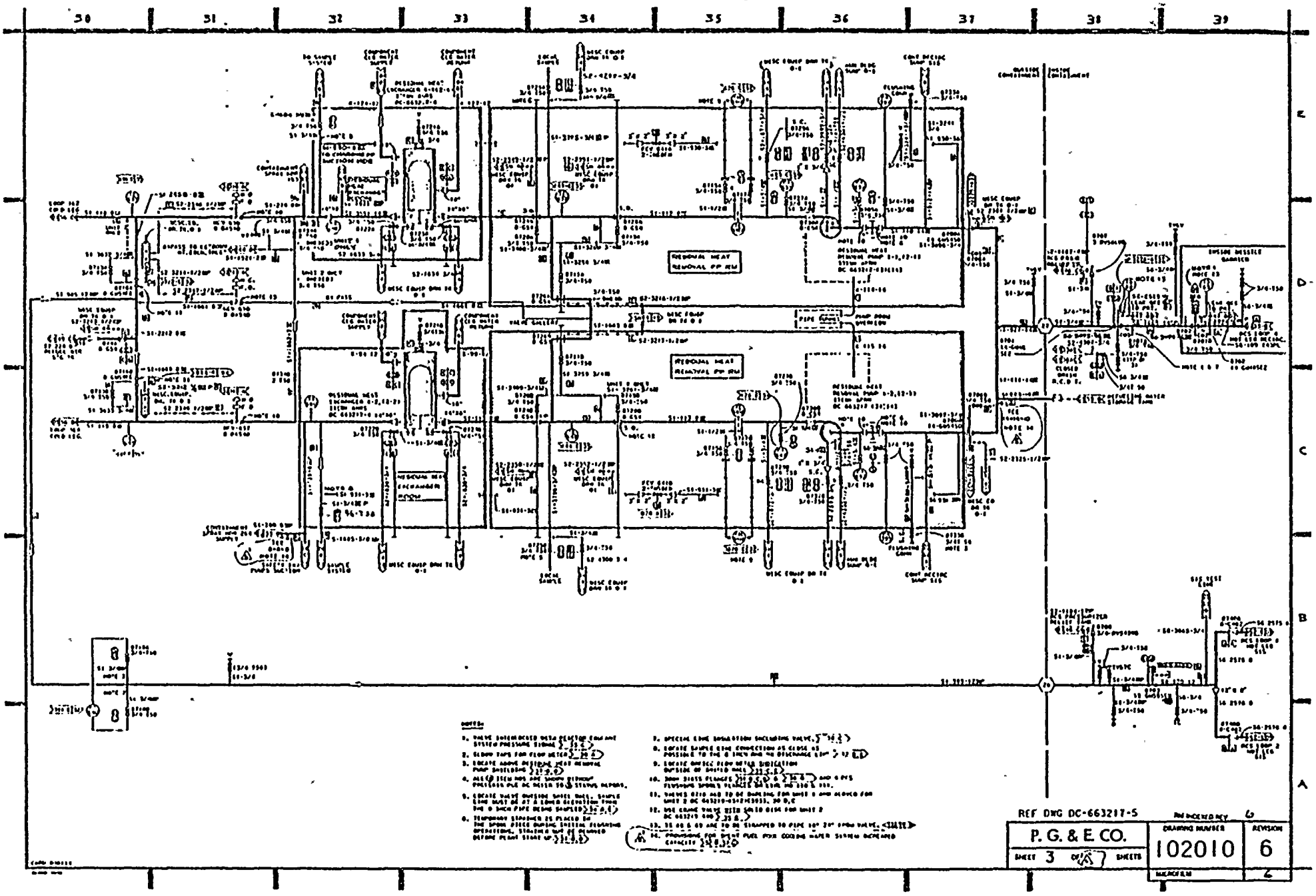
REF DWG DC-663217-5
P. G. & E. CO.
SHEET 3 OF 7 SHEETS
DRAWING NUMBER
102010
REVISION
6

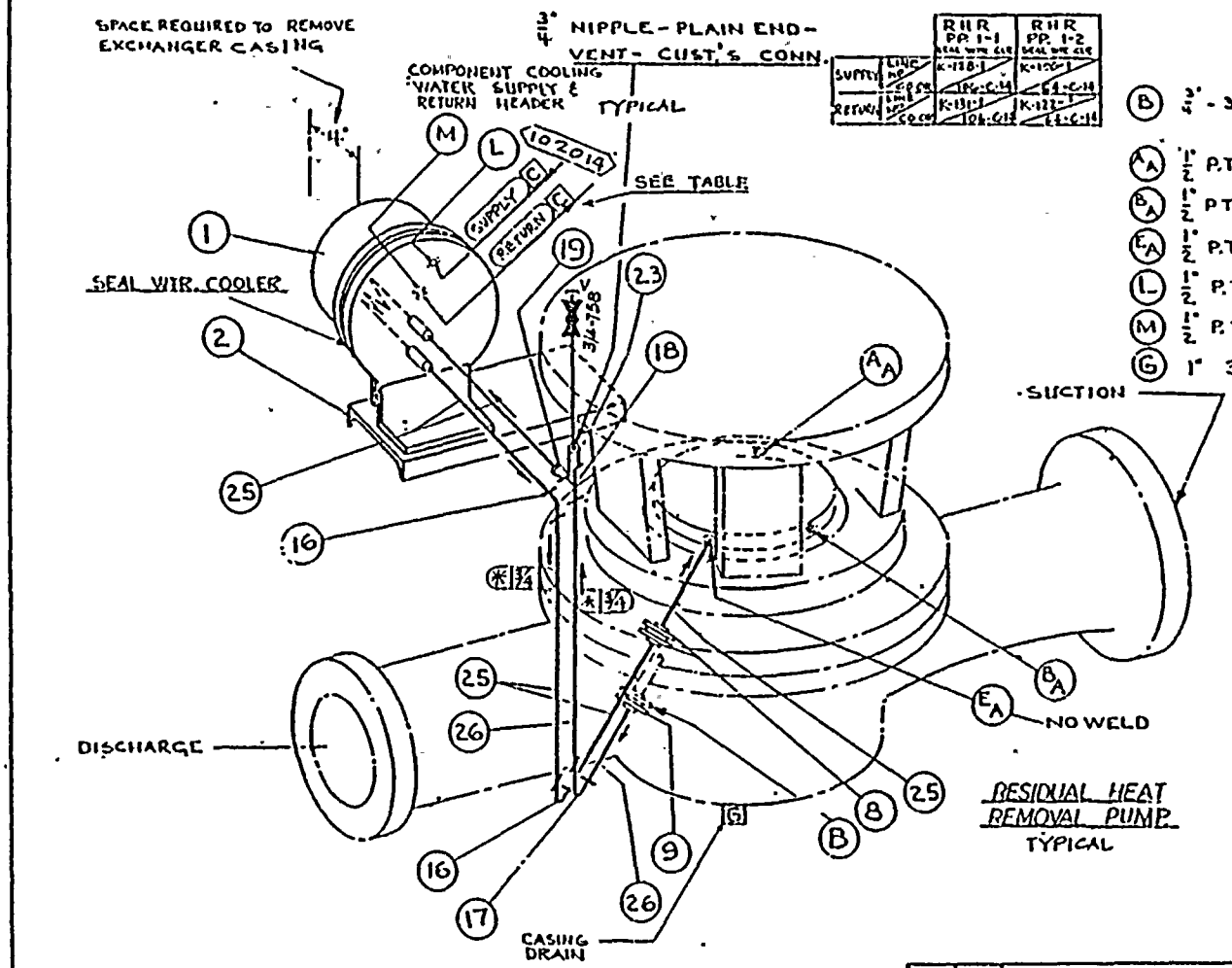

	RHR PP 1-1	RHR PP 1-2
SUPPLY	K-138-1	K-100-1
RETURN	K-131-1	K-122-1

(B) 3/4" - 300# RAISED FACE FLANGE - PUMPING RING OUTLET - PIPED TO HEAT EXCHANGER - PRESSURE DROP 1 PSI

(AA) 1/2" P.T. - VENT OR QUENCH

(BA) 1/2" PT - DRAIN (GLAND DRAIN)

(EA) 1/2" P.T. - FLUSHING CONN. - PIPED FROM HEAT EXCHANGER

(L) 1/2" P.T. - COOLING LIQUID - IN

(M) 1/2" P.T. - COOLING LIQUID - OUT

HEAT EXCHANGER 5.6 P.M. REQUIRED

(G) 1" 300# RF. FLANGE - CASING DRAIN

DYE PENETRATE TEST REQUIRED.
ALL SEALWELDS PER PT ASME-3
NO POSTWELD HEAT TREATMENT REQUIRED.

SHOP NOTE:
USE TEFLON TAPE @ "EA" CONN.

RECIRCULATION OF LIQUID FROM SEAL WITH PUMPING RING - THRU COOLER & BACK TO SEAL.

UNLESS OTHERWISE SPECIFIED

REV	REVISED BY	APP
1	BG	

DATE 2-11-70
ADDED CUST INFC TO "B" & "EA" CONNS.

INGERSOLL-RAND CO.

SEAL PIPING

SCALE NONE

X-8-20W-321X4

1714
MP NO.

NEG 6

REF. DWG. DC:663217-(9)[25]

REVISED REV 6

P G & E CO.
SHEET 4 OF SHEETS

DRAWING NO. 102010

CHANGE 6

SERVICE		PG&E INSTR.NO.	
		PUMP 1	PUMP 2
MOTOR OUTBD. BRG. TEMP		TIC-108	TIC-110
MOTOR INBD. BRG. TEMP.		TIC-109	TIC-111
MOTOR OUTBD. L.O. GAGE		LI-115	LI-117
MOTOR INBD. L.O. GAGE		LI-116	LI-118
MOTOR STATOR TEMP.		TI-509 TO 659A	TI-514 TO 665A
MOTOR STATOR TEMP.		TX-153	TX-223
MOTOR STATOR TEMP.		TX-154	TX-224
MOTOR STATOR TEMP.		TX-155	TX-225
MOTOR STATOR TEMP.		TX-156	TX-226
MOTOR STATOR TEMP.		TX-157	TX-227

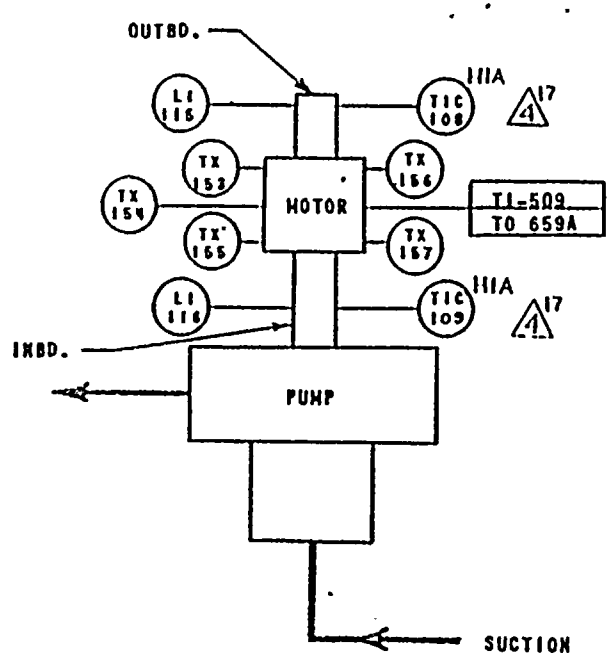

RESIDUAL HEAT REMOVAL
PUMP TYP.

NEG 6

REF.DWG. DC-663217-10

RM INDEXED REV 6

2

P.G.&E.CO.

SHEET NO. 5 OF 5 SHEETS

DRAWING NUMBER 102010

CHANGE 6

SYSTEM OR EQUIPMENT	DESCRIPTION	EQ DRAWINGS
	CHANGE 4 : APR. 1976 - CONT'D	
	ADDED DRAIN VALVE 3/4-2S4 ON PK EXCH. CROSSTIE LINE SI-1063-0 (PER AREA DWG 500072 & 500072	34 D
RESIDUAL HEAT REMOVAL PUMPS & PUMPS DISCHARGE	DELETED-VALVE EXTENSIONS THROUGH SHIELD BALL PENETRATIONS AS FOLLOWS	
	VALVES / LINE OR INSTR.	
	07150 / FE-041 B	35 C
	07110 / FE-041 C	35 C
	07155A / FE-041 A	35 E
	07117A / FE-041 A	35 E
	07290 / 1072	36 B
	07370 / 2593	36 B
	07290A / 1071	36 D
	07370A / 2592	36 D
	(PER AREA DWG 500072 & SPEC 2543)	
RESIDUAL HEAT REMOVAL PUMPS 1-1, 1-2 RECIRC. LINES	REVISED-CONNECTION OF LINES SI-030-3 & SI-031-3 TO LINES SI-110-14 & SI-111-14 TO DOWNSTREAM OF LINES SI-512-10, & SI-513-10 (PER AREA DWG 500072 & 500922)	31-B & D
RESIDUAL HEAT REMOVAL PUMPS FLUSH CONNECTION	REVISED-VENT LOCATION ON LINES SI-3102-3/4 & SI-3241-3/4 BAS OUTSIDE SHIELD BALL PENETRATION. (PER AREA DWG 500072 & 500922)	37-B & D
RESIDUAL HEAT REMOVAL SYSTEM TO REACTOR COLD LEG LOOP 1 HOT LEG	REVISED-VENT ON LINE SI-905-12 UNIT 2 ONLY, BAS CHANGED OVR. NOW DESIGNATED BY BRACKETS (PER PIPE SCHEM. LEGEND DWG. 102001)	34 B
	ADDED- 3/8 P INSULATION TO VENT, TV & TC AND BY 8708 PIPING OFF LINE SI 905-12. (PER AREA DWG 500057 & 500907)	34-B
	REVISED-LINE SG-2575-8 CONNECTION TO LINE SG-120-12 BAS 12"x10" REDUCER IS NOW 12" A 12" X 8" REDUCER TEE (PER AREA DWG 500040 & 500090)	39-A
RCS LOOP 4 HOT LEG TO AUX PUMPS	ADDED HIGH LEAKAGE FLOW MONITORS TS-60, 68 TO VALVES 8704, 8702 LEAK OFF LINES S2-2523-8/2, S2-2526-8/2. (PER ECO-0077 OF 6-10-75)	38-B 38 D
	ADDED NOTE 13 STATING HOW TS SHOULD BE INSTALLED (PER ECO-0077 OF 6-10-75)	33-B
	REVISED FUNCTION OF VENT TO TV & V DH LINE SI-927-14 & SI-1045-14 (PER FSAR SECTION 6.2)	36 B 39-D
AUX PUMP INSTRUMENTATION	REVISED-INTERPRETATION OF TIC-106, 108 BY ADDING "NOT" NOTATION & DELETING REFERENCE FLAG. (PER INSTR. SCHEM 102035)	34 C & D
	CHANGE 5 MAY 8, 1978	
	BY: B. COLEY, E. SHERMAN, MANAC/JM, RACHO	
	LAST ENGINEERING CHANGE ENTERED 4/7/78	
AUX INJECTION TO RC HOT LEG LOOPS 1 & 2	ADDED DRAIN CONNECTION (PER ECO 84-910 ITEM NOS 6 (ECO 84-910 ITEM 43 DWTD 8-2-77)	34-A
AUX CROSS TIE TO LETDOWN HEAT EXCHANGER	REVISED LOCATION OF DRAIN CONNECTION ON LINE NO. 1462 FOR UNIT 2 ONLY. (PER ECO 84-910 ITEM 31 & ISO 2-80-406 REV. 4)	32 B
	CHANGE 6 OCT. 31, 1980	
	BY: J. DICEMISH, T. OHTUA & J. MCCRACKEN	
RESIDUAL HEAT REMOVAL PUMPS & HEAT EXCHANGER	ADDED-SPENT FUEL POOL COOLING WATER SYSTEM INCREASED CAPACITY CONNECTIONS: 6" CONN. IN THE RHR HX DISCHARGE LINE NO. 260 & 10" CONN. IN THE RHR PUMPS SUCTION LINE NO. 111. (PER ECO EN 572 REV.1 OF 5-14-80)	32 B 37 C
SHEET REVISIONS	REVISED: 07 1 2 3 4 5 / 08 1 2 6 3 4 5	

NOTE: SHEET NO. 3 HAS BEEN REDRAWN BY COMPUTER AIDED DESIGN DRAFTING. (CADD)

PIPING SCHEMATIC DISTRIBUTION LIST

QUANTITY Part II	QUANTITY Part II	22 MONTH SERVICE NAME	DEPARTMENT		DWG
1	-	L.J.MYERS	MECH ENGR		20504
-	1	F.J.BAN	ELECE	ENGRG	1004
1	1	R.D.BARNES		DSGN	22100
13	5	P.W.FRONCKE	MECH ENGRG/NE		2630
1	-	P. FRAU			2541
13	20**	W.W.DENSON	MECH DSGN		22104
-	1	F.P.SIEGLERSKI			22104
1	11	R.L. SIMMONS			22104
1	-	R.D.SIMMON			22104
-	2	R.J.DAVIDSON			2630
1	-	D.CRAWFORD			2704
1	1	R.E.PULLEY			2363
-	1	W.W.HEAD			
-	1	J.D.JOHNSON	NUC PWR GEN		2403
-	1	J.FRYMIRE			
-	-	20% MARKET			
-	1	M.G.GUZMAN	ENGRG DC		540
-	-	DRAFTING CONTROL			
1	5	R.D.TUDOR	Q ASSURANCE		-
300	30	R.PETERSON	NUC PWR GEN		POINT
45	60*	C.SCHEFE	SYA CONST		DSGN
279	111	TOTAL			

* PLUS 6 REPRODUCIBLES SIZE 11x17
** PLUS 1 REPRODUCIBLE SIZE 11x17

FRONT	1	3	5
BACK	2	4	6

TOTAL 6 SHEETS
PRI INDEXED REV

P. G. & E CO.
SHEET 6A OF 6 SHEETS
102010
CHANGE 6

35 MM REQ 6

ITEM K

THERMAL MODES, PRESSURES & ANCHOR MOVEMENTS

PACIFIC GAS AND ELECTRIC COMPANY

MECHANICAL AND NUCLEAR ENGINEERING DEPARTMENT

Subject: Diablo Canyon Unit 1
Seismic Analysis 6-11 (Line No. 1-S1-985-12 III P [B])
Containment Dilation, Thermal Modes and Anchor Movements

MADE BY: [illegible] DATE: 11-19-81

CHECKED BY: [illegible] DATE: 11-19-81

APPROVED BY: [illegible] DATE: 11/19/81

1. DESIGN CONDITION

Temperature = 350°F Pressure = 350 psia

2. TEST CONDITION

Temperature = 100°F plus Containment Dilation Movements

3. ACCIDENT CONDITION

Temperature = 350°F plus Containment Dilation Movements

4. CONTAINMENT DILATION (PRESSURIZATION) MOVEMENTS

X = 1.200"		+X = SOUTH
Y = 0.450"	WHERE	+Y = UP
Z = 0.170"		+Z = WEST

Source: Flexibility Analysis 88, Rev. C Issue Date: March 8, 1974
Line Designation Table, Appendix I, Design Criteria Memorandum M-9
10-1-81 Revision