10 CFR 50.55a

VIRGINIA ELECTRIC AND POWER COMPANY
RICHMOND, VIRGINIA 23261

November 30, 2016

United States Nuclear Regulatory Commission
Attention: Document Control Desk
Washington, D.C. 20555

Serial No.	16-280
NAPS/JHL	R0
Docket Nos.	50-338
	50-339
License Nos.	NPF-4
	NPF-7

VIRGINIA ELECTRIC AND POWER COMPANY (DOMINION)
NORTH ANNA POWER STATION UNITS 1 AND 2
ASME SECTION XI INSERVICE INSPECTION PROGRAM
REQUEST FOR PROPOSED ALTERNATIVE N1-I4-NDE-009 AND N2-I4-NDE-004

In accordance with 10 CFR 50.55a(z)(1), Dominion hereby requests Nuclear Regulatory Commission (NRC) approval of proposed inservice inspection (ISI) alternative N1-I4-NDE-009 and N2-I4-NDE-004 for North Anna Units 1 and 2. The request is to eliminate the ASME Category B-G-1, Item B6.40, Pressure retaining bolting greater than 2-inches, Reactor Vessel – Threads in Flange volumetric examination, in accordance with an industry initiative analyzed in Electric Power Research Institute (EPRI) Report #3002007626, "Nondestructive Evaluation: Reactor Pressure Vessel Threads in Flange Examination Requirements," March 2016. The request for alternative is provided in Attachment 1.

Dominion requests approval of the proposed alternative by February 1, 2018. If you have any questions, please contact Mr. Donald Taylor at (540) 894-2100.

Sincerely,

Mark Sartain
Vice President - Nuclear Engineering

Vicki L. Hull
NOTARY PUBLIC
Commonwealth of Virginia
Reg. # 140542
My Commission Expires May 31, 2018

COMMONWEALTH OF VIRGINIA)
)
COUNTY OF HENRICO)

The foregoing document was acknowledged before me, in and for the County and Commonwealth aforesaid, today by Mark D. Sartain, who is Vice President – Nuclear Engineering of Virginia Electric and Power Company. He has affirmed before me that he is duly authorized to execute and file the foregoing document in behalf of that Company, and that the statements in the document are true to the best of his knowledge and belief.

Acknowledged before me this 30TH day of November, 2016.

My Commission Expires: May 31, 2018.

Vicki L. Hull
Notary Public

A047
NRR

Attachment:

1. Request for Proposed Alternative N1-I4-NDE-009 and N2-I4-NDE-004

This letter contains no NRC commitments.

cc: U.S. Nuclear Regulatory Commission
Region II
Marquis One Tower
245 Peachtree Center Ave., NE, Suite 1200
Atlanta, Georgia 30303-1257

Mr. J. E. Reasor, Jr.
Old Dominion Electric Cooperative
Innsbrook Corporate Center
4201 Dominion Blvd.
Suite 300
Glen Allen, Virginia 23060

NRC Senior Resident Inspector
North Anna Power Station

Dr. V. Sreenivas
NRC Project Manager-North Anna
U. S. Nuclear Regulatory Commission
One White Flint North
Mail Stop O-8 G9A
11555 Rockville Pike
Rockville, Maryland 20852

ATTACHMENT 1

N1-I4-NDE-009 and N2-I4-NDE-004
REACTOR VESSEL THREADS IN FLANGE EXAMINATION

VIRGINIA ELECTRIC AND POWER COMPANY (DOMINION)
NORTH ANNA POWER STATION UNIT 1 AND UNIT 2

[THIS PAGE INTENTIONALLY LEFT BLANK]

N1-I4-NDE-009 and N2-I4-NDE-004
Proposed Alternative for North Anna Unit 1 and Unit 2
Reactor Vessel Threads In Flange Volumetric Examination

In Accordance with 10 CFR 50.55a(z)(1)
-- Alternative Provides Acceptable Level of Quality and Safety --

1.0 ASME CODE COMPONENT(S) AFFECTED

The affected component is the North Anna Unit 1 and Unit 2 Reactor Pressure Vessel (RPV). Specifically, the following American Society of Mechanical Engineers (ASME) Boiler and Pressure Vessel (BPV) Code, Section XI (Reference 1) examination categories B-G-1, Item B6.40, Pressure retaining bolting greater than 2-inches, Reactor Vessel – Threads in Flange require a volumetric examination.

(Throughout this request the above examination category is referred to as "the subject examinations" and the ASME BPV Code, Section XI, is referred to as "the Code.")

2.0 APPLICABLE CODE EDITION AND ADDENDA

North Anna Power Station Unit 1 (NAPS 1) and North Anna Power Station Unit 2 (NAPS 2) applicable Code for the fourth 10-year inservice inspection (ISI) interval and the ISI program is the 2004 Edition of Section XI with no Addenda (Reference 1). NAPS 1 fourth ISI interval started May 1, 2009 and ends April 30, 2019. NAPS 2 fourth ISI interval started December 14, 2010 and ends December 13, 2020.

3.0 APPLICABLE CODE REQUIREMENT

The RPV threads in flange are examined using a volumetric examination technique with 100% of the flange ligament areas examined every ISI interval. The examination area is the one-inch area around each RPV stud hole, as shown on Figure IWB-2500-12. The North Anna Unit 1 fourth 10-year ISI interval is scheduled to end on April 30, 2019. The North Anna Unit 2 fourth 10-year ISI interval is scheduled to end on December 13, 2020.

4.0 REASON FOR REQUEST

The industry, through the Electric Power Research Institute (EPRI), has worked to provide the basis for elimination of the RPV Threads in Flange examination requirement. Licensees in the US and internationally have worked with EPRI to

produce a technical report (Reference 2), which provides the basis for elimination of the requirement. The technical report evaluates potential degradation mechanisms and includes a stress analysis / flaw tolerance evaluation. The technical report also includes a review of operating experience (OE), based on a survey of inspection results from over 168 units, related to RPV flange/bolting and related RPV assessments. The evaluation concludes that the safety benefit of the current examination requirements are not commensurate with the associated impact on worker exposure, personnel safety, radwaste, and increased time at reduced RCS inventory. The technical basis for the proposed alternative is discussed in more detail below.

Potential Degradation Mechanisms

An evaluation of potential degradation mechanisms that could impact flange/threads reliability was included in the EPRI technical report (Reference 2). Potential types of degradation evaluated included: pitting, intergranular attack, corrosion, fatigue, stress corrosion cracking, crevice corrosion, velocity phenomena, dealloying corrosion and general corrosion, stress relaxation, creep, mechanical wear and mechanical/thermal fatigue. Other than the potential for mechanical/thermal fatigue, no active degradation mechanisms were identified for the threads in flange component.

The EPRI technical report notes a general conclusion from Reference 3 (which includes work supported by the NRC) that when a component item has no active degradation mechanism present, and a pre-service inspection has confirmed that the inspection volume is in good condition (i.e. no flaws / indications), then subsequent inservice inspections do not provide additional value going forward. As discussed in the OE review summary below, the RPV flange ligaments (threads in flange) have received the required pre-service examinations, and over 10,000 inservice inspections, with no relevant findings.

Reference 2 documents a stress analysis and flaw tolerance evaluation of the flange thread area which assess the potential for mechanical/thermal fatigue. The evaluation consists of two parts. In the first part, stress analysis is performed considering all applicable loads on the Threads in Flange component. In the second part, the stresses at the critical locations of the component are used in a fracture mechanics evaluation to determine the allowable flaw size for the component as well as how much time it will take for a postulated initial flaw to grow to the allowable flaw size using guidelines in the ASME Code, Section XI IWB-3500. The Pressurized Water Reactor (PWR) design was selected because of its higher design pressure and temperature. A representative geometry for the finite element model used the largest PWR RPV diameter along with the largest bolts and the highest number of bolts. The larger and more numerous bolt configuration results in less flange material between bolt holes, whereas the larger RPV diameter results in higher pressure and thermal stresses.

Stress Analysis

A stress analysis was performed in Reference 2 to determine the stresses at critical regions of the Threads in Flange component as input to a flaw tolerance evaluation. Sixteen nuclear power plant units (ten PWRs and six Boiling Water Reactors (BWRs)) were considered in the analysis. The evaluation was performed using a geometrical configuration that bounds the sixteen nuclear power plant units considered in this effort. The details of the RPV parameters for NAPS Units 1 and 2 as compared to the bounding values used in the evaluation are shown in Table 1. As indicated in the table, the diameter of the stud used in the analysis is the same as the diameter of the stud used at NAPS Units 1 and 2. All other parameters shown in the table are bounded by the evaluation. Dimensions of the analyzed geometry are shown in Figure 1.

Table 1: Comparison of NAPS Units 1 and 2 Parameters to Bounding Values Used in Analysis

Plant	No. of Studs	Stud Nominal Diameter (inches)	RPV Inside Diameter at Stud Hole (inches)	Flange Thickness at Stud Hole (inches)	Design Pressure (psia)
NAPS-1, 2	58	6.0	155	16.7	2500
Range for 16 Units Considered	54 - 60	6.0 - 7.0	155 - 173	15 -16	2500
Bounding Values Used in Analysis	**54**	**6.0**	**173**	**16**	**2500**

The analytical model is shown in Figures 2 and 3. The three loads considered in the analysis were:

- A design pressure of 2500 psia at an operating temperature of 600°F, applied to all internal surfaces exposed to internal pressure.
- Bolt/stud preload – The preload was calculated as detailed in NAPS Units 1 and 2 RPV manual. The preload on the bounding geometry is calculated as:

$$P_{preload} = \frac{C \cdot P \cdot ID^2}{S \cdot D^2} = \frac{1.1 \cdot 2500 \cdot 173^2}{54 \cdot 6^2} = 42{,}338 \text{ psi}$$

where:

$P_{preload}$	=	Preload pressure to be applied on modeled bolt (psi)
P	=	Internal pressure (psi)
ID	=	Largest inside diameter of RPV (in.)
C	=	Bolt-up contingencies (+10%)
S	=	Least number of studs
D	=	Smallest stud diameter (in.)

- Thermal stresses - The only significant transient affecting the bolting flange is heat-up/cooldown. This transient typically consists of a steady 100°F/hour ramp up to the operating temperature, with a corresponding pressure ramp up to the operating pressure.

The ANSYS finite element analysis program was used to determine the stresses in the Threads in Flange component for the three loads described above.

Flaw Tolerance Evaluation

A flaw tolerance evaluation was performed using the results of the stress analysis to determine how long it would take an initial postulated flaw to reach the ASME Code, Section XI allowable flaw size. A linear elastic fracture mechanics evaluation, consistent with ASME Code, Section XI, IWB 3600, was performed.

Stress intensity factors (Ks) at four flaw depths of a 360° inside-surface-connected, partial-through-wall circumferential flaws are calculated using finite element analysis techniques with the model described above. The maximum stress intensity factor (K) values around the bolt hole circumference for each flaw depth (*a*) are extracted and used as to perform the crack growth calculations. The circumferential flaw is modeled to start between the 10th and 11th flange threads from the top end of the flange because that is where the largest tensile axial stress occurs. The modeled flaw depth–to–wall thickness ratios (a/t) are 0.02, 0.29, 0.55, and 0.77, as measured in any direction from the stud hole. This creates an ellipsoidal flaw shape around the circumference of the flange, as shown in Figure 4 for the flaw model with a/t = 0.77 a/t crack model. The crack tip mesh for the other flaw depths follows the same pattern. When preload is not being applied, the stud, stud threads, and flange threads are not modeled. The model is otherwise unchanged between load cases.

The maximum K results for the four crack depths are summarized in Table 2. Since the crack tip varies in depth around the circumference, the maximum K from all locations at each crack size is conservatively used for the *K vs. a* profile.

Table 2: Maximum K vs. a/t

Load	K at Crack Depth (ksi√in)			
	0.02 a/t	0.29 a/t	0.55 a/t	0.77 a/t
Preload	11.2	17.4	15.5	13.9
Preload + Heatup + Pressure	13.0	19.8	16.1	16.3

The allowable stress intensity factor was determined based on the acceptance criteria in ASME Section XI, IWB-3610/Appendix A, which indicates:

$$K_I < K_{Ic}/\sqrt{10} = 69.6 \text{ ksi}\sqrt{\text{in}}$$

Where,

K_I = Allowable stress intensity factor (ksi√in)

K_{Ic} = Lower bound fracture toughness at operating temperature (220 ksi√in)

As shown in Table 2, the allowable K is not exceeded for all crack depths up to the deepest analyzed flaw of a/t = 0.77. Hence, the allowable flaw depth of the 360° circumferential flaw is at least 77% of the thickness of the flange. The allowable flaw depth is assumed to be equal to the deepest modeled crack for the purposes of this analysis.

For the crack growth evaluation, an initial postulated flaw size of 0.2 in. (5.08 mm) is chosen consistent with the ASME Code, Section XI IWB-3500 flaw acceptance standards. The deepest flaw analyzed is a/t = 0.77 because of the inherent limits of the model. Two load cases are considered for fatigue crack growth: 1) heat-up/cooldown and 2) bolt preload. The heat-up/cooldown load case includes the stresses due to thermal and internal pressure loads and is conservatively assumed to occur 50 times per year. The bolt preload is assumed to be present and constant during the load cycling of the heat-up/cooldown load case. The bolt preload load case is conservatively assumed to occur five times per year, and these cycles do not include thermal or internal pressure. The resulting crack growth was determined to be negligible due to the small delta K and the relatively low number of cycles associated with the transients evaluated. Because the crack growth is insignificant, the allowable flaw size will not be reached and the integrity of the component is not challenged for at least 80 years (original 40-year design life plus an additional 40 years of plant life extension).

The stress analysis / flaw tolerance evaluation presented above show that the Threads in Flange component at NAPS Units 1 and 2 is very flaw tolerant and can operate for 80 years without violating ASME Code, Section XI safety margins. This clearly demonstrates that the Thread-in-Flange examinations can be eliminated without affecting the safety of the RPV.

Operating Experience Review Summary

As discussed above, the results of the survey, which includes results from NAPS, confirmed that the RPV Threads in Flange examination are adversely impacting outage activities (dose, safety, increased time at reduced RCS inventory) while not identifying any service induced degradations. Specifically, for the US fleet, a total of 94 units have responded to date and none of these units have identified any type of degradation. Table 3 represents the data from 33 BWRs and 61 PWRs. For the BWR units, a total 3,793 examinations were conducted and for the PWR units a total of 6,869 examinations were conducted, with no service induced degradation identified. The response data includes information from all of the plant designs in operation in the US and includes BWR-2, -3, -4, -5 and -6 designs. The PWR plants include the 2- loop, 3-loop and 4-loop designs and each of the PWR NSSS designs (i.e., Babcock & Wilcox, Combustion Engineering and Westinghouse).

Table 3: Summary of Survey Results – US Fleet

Plant Type	Number of Units	Number of Examinations	Number of Reportable Indications
BWR	33	3,793	0
PWR	61	6,869	0
Total	94	10,662	0

Related RPV Assessments

In addition to the examination history and flaw tolerance discussed above, Reference 2 provides a discussion of studies conducted in response to the issuance of the Anticipated Transient Without Scram (ATWS) Rule by the United States Nuclear Regulatory Commission (USNRC). This rule was issued to require design changes to reduce expected ATWS frequency and consequences. Many studies have been conducted to understand the ATWS phenomena and key contributors to successful response to ATWS event. In particular, the reactor coolant system and its individual components were reviewed to determine weak links. As an example, even though significant structural margin was identified in USNRC SECY-83-293 for PWRs, the ASME Service Level C pressure of 3200 psig was assumed be to an unacceptable plant condition. While a higher ASME service level might be defensible for major Reactor Coolant System (RCS) components, other portions of the RCS could deform to the point of inoperability. Additionally,

there was the concern that steam generator tubes might fail before other RCS components, with a resultant bypass of containment. The key takeaway for these studies is that the RPV flange ligament was not identified as a weak link and other RCS components were significantly more limiting. Thus, there is substantial structural margin associated with the RPV flange.

In summary, Reference 2 identifies that the RPV Threads in Flange are performing with very high reliability based on operating and examination experience. This is due to the robust design and a relatively benign operating environment (e.g., the number and magnitude of transients is small, generally not in contact with primary water at plant operating temperatures/pressures, etc.). The robust design is manifested in that plant operation has been allowed at several plants even with a bolt/stud assumed to be out of service. As such, significant degradation of multiple bolts/threads would be needed prior to any RCS leakage.

5.0 PROPOSED ALTERNATIVE AND BASIS FOR USE

In lieu of the requirements for a volumetric ultrasonic examination, Dominion is proposing to utilize the industry report as the basis for eliminating the requirement for this examination for both North Anna Unit 1 and North Anna Unit 2.

Dominion has confirmed that NAPS plant specific parameters (e.g. vessel diameter, number of studs, inservice inspection findings) are consistent with or bounded by Reference 2.

Since there is reasonable assurance that the proposed alternative is an acceptable alternate approach to the performance of the ultrasonic examinations, Dominion requests authorization to use the proposed alternative pursuant to 10 CFR 50.55a(z)(1) on the basis that the use of the alternative provides an acceptable level of quality and safety. The Threads in Flange examinations can be eliminated without increasing plant risk or posing any safety concerns for the RPV.

To protect against non-service related degradation, each outage Dominion uses a detailed procedure for the removal, care and visual inspection of the RPV studs and the threads in flange. Care is taken when removing the studs during inspection of the RPV threads for damage, and during installation of RPV stud plugs to protect threads from damage. Prior to reinstallation, the studs and stud holes are cleaned and lubricated. The studs are then replaced and tensioned into the Reactor Vessel. This activity is performed each refueling outage and the procedure documents each step. These controlled maintenance activities provide further assurance that degradation is detected and mitigated prior to returning the reactor to service.

In addition, it is noted that all other inspection activities, including the system leakage test (ASME XI Category B-P), which are conducted each refueling outage, will continue to be performed.

6.0 DURATION OF PROPOSED ALTERNATIVE

This request is applicable to the North Anna Unit 1 inservice inspection program for the fourth inspection interval, which began May 1, 2009 and ends April 30, 2019. This request is applicable to the North Anna Unit 2 inservice inspection program for the fourth inspection interval, which began December 14, 2010 and ends December 13, 2020.

7.0 REFERENCES

1. ASME Boiler and Pressure Vessel Code, Section XI, 2004 Edition with No Addenda, ASME International.
2. EPRI Nondestructive Evaluation Report – Reactor Pressure Vessel Threads in Flange Examination Requirements. 3002007626; Dated: March 2016 Electric Power Research Institute (EPRI).
3. American Society of Mechanical Engineers, Risk-Based Inspection: Development of Guidelines, Volume 2-Part 1 and Volume 2-Part 2, Light Water Reactor (LWR) Nuclear Power Plant Components. CRDT-Vols. 20-2 and 20-4, ASME Research Task Force on Risk-Based Inspection Guidelines, Washington, DC, 1992 and 1998.

Figure 1

Modeled Dimensions

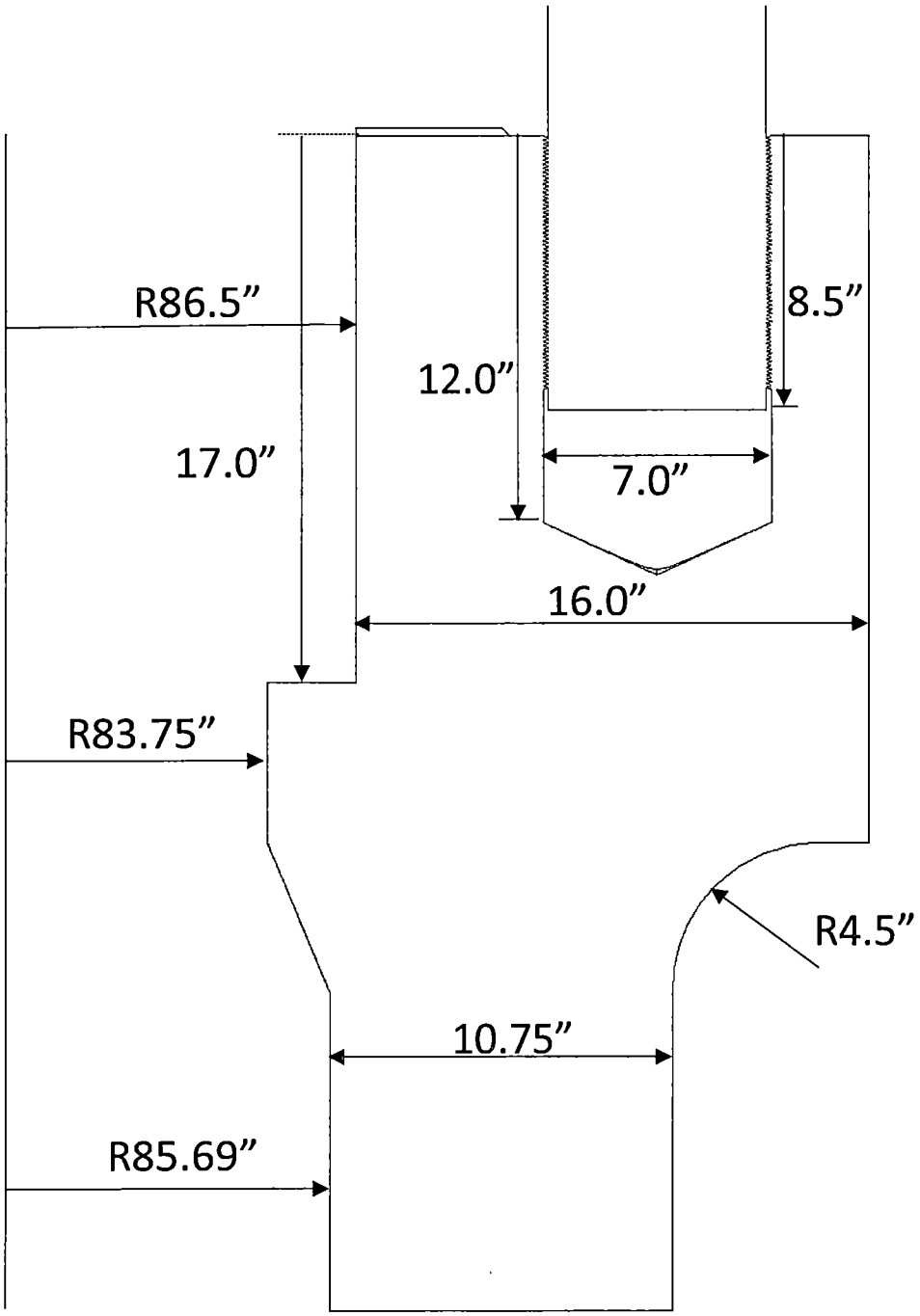

Figure 2

Finite Element Model Showing Bolt and Flange Connection

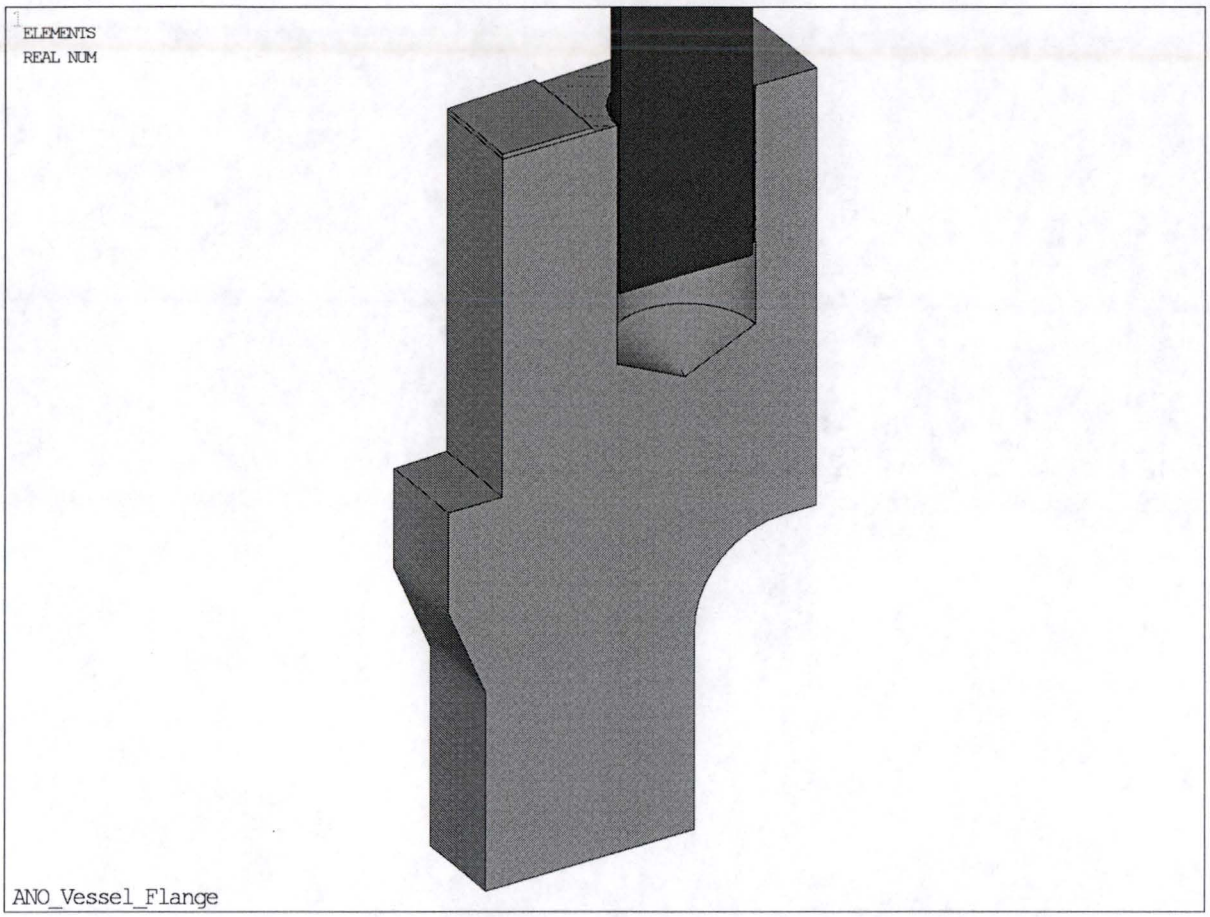

Figure 3

Finite Element Model Mesh With Detail At Thread Location

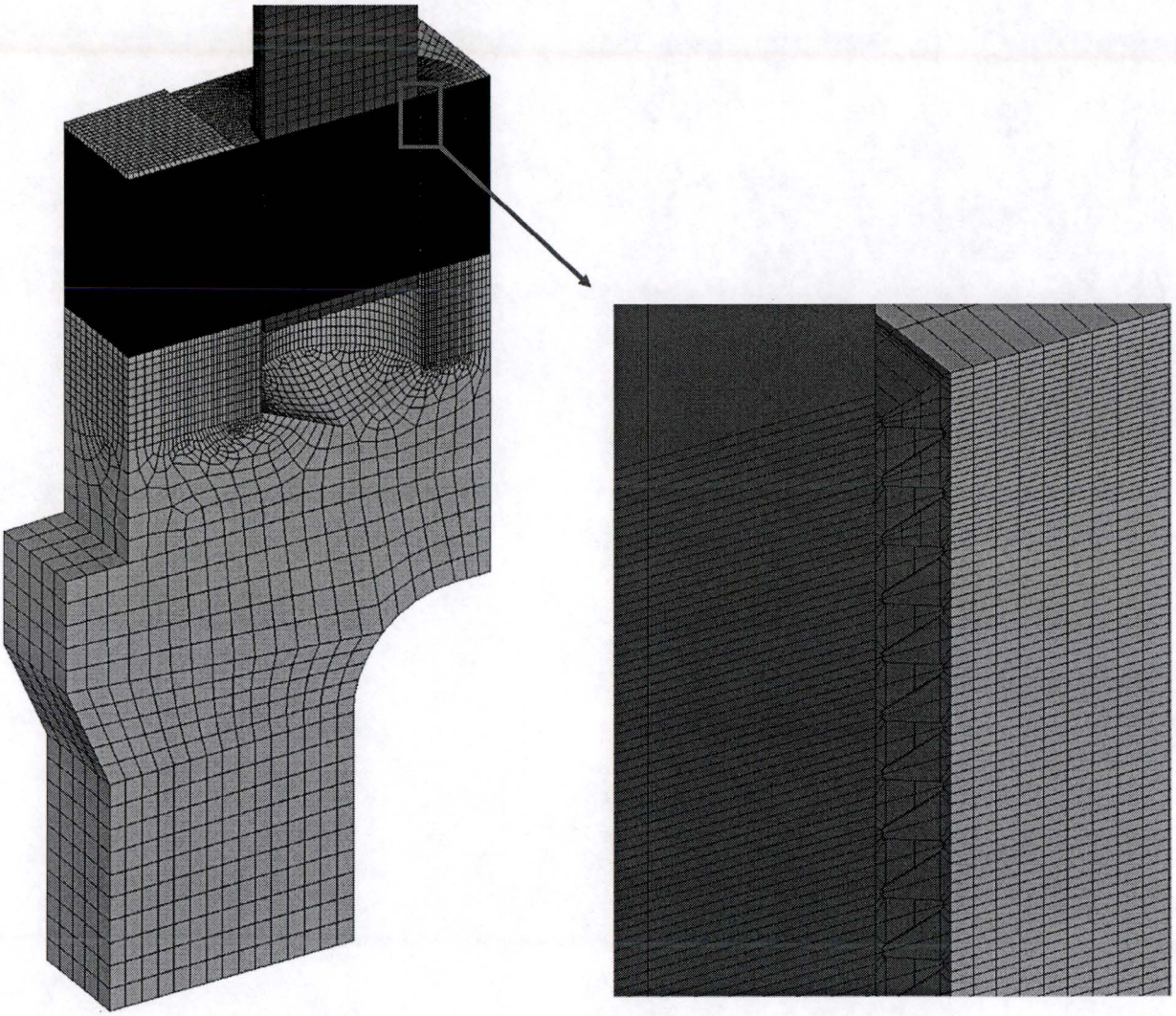

Figure 4

Cross Section Of Circumferential Flaw With Crack Tip Elements Inserted After 10th Thread From Top Of Flange