CF

NUCLEAR REGULATORY COMMISSION

IN THE MATTER OF:

PACIFIC GAS & ELECTRIC COMPANY

(Diablo Canyon Units 1 and 2)

Docket Nos. 50-275
50-323

Place - Avila Beach, California

Date - 4 January 1979

Pages 7175 - 7396

Telephone:
(202) 347-3700

ACE - FEDERAL REPORTERS, INC.

Official Reporters

444 North Capitol Street
Washington, D.C. 20001

NATIONWIDE COVERAGE - DAILY

CR1931
BLoom/wb
WELandon
Madelon

UNITED STATES OF AMERICA

NUCLEAR REGULATORY COMMISSION

In the matter of:	
PACIFIC GAS & ELECTRIC COMPANY	Docket Nos. 50-275
(Diablo Canyon Units 1 and 2)	50-323

Cavalier Room,
San Luis Bay Inn,
Avila Beach, California.

Thursday, January 4, 1979.

The hearing in the above-entitled matter was reconvened, pursuant to adjournment, at 8:30 a.m.

BEFORE:

ELIZABETH BOWERS, Esq., Chairman,
Atomic Safety and Licensing Board.

DR. WILLIAM E. MARTIN, Member.

GLENN O. BRIGHT, Member.

APPEARANCES:

BRUCE NORTON, Esq., 3216 No. Third Street,
Phoenix, Arizona 85012.

MALCOLM H. FURBUSH, Esq. and PHILIP CRANE, Esq.,
Legal Department, Pacific Gas & Electric Company,
77 Beale Street, San Francisco, California 94106.

wb

On behalf of the Joint Intervenors:

DAVID S. FLEISCHAKER, Esq., Suite 602,
1025 15th Street N.W., Washington, D.C.

STEPHEN KRISTOVICH, Esq., Center for Law in
the Public Interest, 10203 Santa Monica Boulevard,
Los Angeles, California 90067.

On behalf of the Regulatory Staff:

JAMES R. TOURTELLOTTE, Esq. and EDWARD KETCHEN, Esq.,
Office of Executive Legal Director, U.S.
Nuclear Regulatory Commission,
Washington, D.C. 20555.

wb

C O N T E N T S

1A wrb/agb1

P R O C E E D I N G S

MRS. BOWERS: We'll be on the record.

May we have the panel identified.

Whereupon,

JOHN A. BLUME,

VINCENT J. GHIO,

DAVID A. LANG,

RALPH T. YOKOYAMA,

CHUNG M. LI

and

DAVID WILLIAMS

resumed the stand as witnesses on behalf of the Applicant, and, having been previously duly sworn, were examined and testified further as follows:

MR. NORTON: Mrs. Bowers, this panel is going to be discussing the turbine building. I have a list that has those two reversed, that's my problem. It's going to be the turbine building.

DIRECT EXAMINATION

BY MR. NORTON:

Q Mr. Ghio, do you have any corrections to the testimony, the section of the testimony on the turbine building at this time?

A (Witness Ghio) Yes, one minor correction.

On the last page of this piece of testimony,

wrb/agb2

Page Six, Line Three, insert a comma after the word "cables." That's the only correction.

Q Mr. Ghio, at this time can you give a short summary of the testimony regarding the turbine building?

A The turbine building, as was the case for the previously discussed structures, has been reviewed for both the Blume and Newmark free field response spectra, and then spectra corrections were made using tau filtering to make a structure-specific spectra for the turbine building.

The vertical spectra were taken as 2/3rds of the horizontal spectra. Seven percent damping was used, average material strengths, determined from actual tests of the materials used in the building, were incorporated in the analysis. Accidental torsion was considered by a 10 percent increase in all responses resulting from the translational analyses.

The testimony goes on to discuss the models that were used in the analyses, and then summarizes the results of the analyses.

These results indicated that the unmodified turbine building did not perform satisfactorily under the postulated 7.5 magnitude Hosgri seismic motions. Substantial structural modifications have been required for the turbine building.

In this summary, I will briefly highlight the main features of the modifications.

New exterior concrete buttresses, anchored by a

wrb/agb3

combination of ties to the existing building, drilled piers or caissons and grouted rock bolts into the underlying rock were required.

Shear walls in both the north-south and east-west orientations in the building below elevation 104 were strengthened. Existing floor grating have been substantially replaced by steel plate plate at elevations 104 and 119.

New concrete shear walls along the east and west sides of the building have been added. New vertical and horizontal steel bracing have been added in the building.

The testimony lists additional modifications, but I will not summarize those as they were less significant than those I've cited.

The mathematical models of the building, revised to incorporate the structural modification, were re-analyzed for the Hosgri motions, and the results of that re-analysis showed that the building met the specified acceptance criteria.

There is a table appended to the testimony that summarizes some of the stress results.

The turbine pedestal, which is a massive structure located within the turbine building, it shares a common foundation mat with the turbine building and supports the turbine generator set, was analyzed for the same horizontal and vertical response spectra as the turbine building itself.

As a result of that analysis, modifications were

wrb/agb4

determined to be necessary to prevent the turbine pedestal from possibly impacting the surrounding building and to maintain stress levels within the acceptance criteria.

I conclude the testimony with the statement that the turbine building, with the substantial modifications discussed, is capable of withstanding the Hosgri earthquake.

That concludes my summary.

MRS. BOWERS: Mr. Norton, before we proceed, I'm not clear on the identification of one of the witnesses.

MR. NORTON: It is L-1.

MRS. BOWERS: Thank you.

MR. NORTON: At this time, we would ask that the testimony regarding the turbine building be placed in the record as though read.

MRS. BOWERS: Mr. Kristovich?

MR. KRISTOVICH: No objection.

MRS. BOWERS: The Staff?

MR. KETCHEN: No objection.

MRS. BOWERS: Well, the testimony will be physically inserted in the transcript as if read.

(The document follows:)

TESTIMONY OF
VINCENT J. GHIO
AND
DAVID LANG
ON BEHALF OF
PACIFIC GAS AND ELECTRIC COMPANY
DECEMBER 4, 1978
DOCKET NOS. 50-275, 50-323

HOSGRI ANALYSIS AND EVALUATION OF THE TURBINE BUILDING

The horizontal seismic inputs for the Turbine Building corresponded to the Blume and Newmark response spectra. These spectra were adjusted for spatial averaging of accelerations to make them structure-specific. The seismic input for the building in the vertical direction corresponded to the Newmark free-field spectrum, scaled by two-thirds. This spectrum exceeds the corresponding Blume spectrum virtually everywhere.

Damping of 7% was used in the Hosgri analysis in accordance with Regulatory Guide 1.61. The concrete strength corresponded to the average cylinder strength of samples used in the construction of the structure. The average test value yield strength was used for the structural steel and concrete reinforcing steel in the building.

Due to the configuration of the building and the absence of rigid diaphragms, accidental torsion was considered by a 10% increase in all responses resulting from the translational analyses.

The north-south, east-west and vertical analyses of the Turbine Building were decoupled to facilitate the

analysis of the structurally complex building. For the analysis resulting from north-south earthquake motions, two-dimensional models of the east and west walls of the building were developed and analyzed. For the east-west analysis, a comprehensive three-dimensional model considering all major elements of the east-west lateral force resisting system was developed. Several simplified mathematical models were developed for analysis of the building in the vertical direction.

The results of the analyses of the unmodified building indicated that the structure did not perform satisfactorily under the postulated 7.5M Hosgri seismic motions. In particular, the floors at elevations 119 and 104 were subjected to high lateral accelerations. In addition, the large east-west displacements caused significant out-of-plane bending of shear walls along the east and west sides of the building.

The following modifications to the existing structural system were found to be necessary in order to resist the Hosgri earthquake within the acceptance criteria:

A. New exterior concrete buttresses with horizontal diaphragms and a new east-west interior concrete shear wall below elevation 119.00 have been constructed. These walls are anchored against overturning by a combination of ties to the existing building, drilled piers or caissons, and/or grouted rock bolts. Shear forces are transferred to

the soil by a combination of shear keys and ties to the existing foundations.

B. The existing north-south and east-west concrete shear walls below elevation 104 were strengthened. This has been accomplished by thickening the existing walls and adding rock bolts to resist overturning forces.

C. The existing floor grating at elevation 104 and 119 have been substantially replaced by steel plate. The plate is welded to the existing floor framing to withstand the larger seismic forces.

D. Floor framing at elevations 104 and 119 have been strengthened. Selected connections have been strengthened and in some cases additional plates have been added to increase member capacities.

E. New concrete shear walls along the east and west sides of the building between elevations 104 and 140 have been added. These walls provide additional lateral stiffness in the north-south directions.

F. New vertical steel bracing has been added along the east and west sides of the building between elevations 140 and the roof to provide increased north-south stiffness.

G. New horizontal steel bracing has been added in the lower chord of the roof trusses of the building. This modification serves to better distribute the seismic forces at roof level.

H. The connections for the vertical and horizontal bracing member joints have been strengthened by adding bolts to develop the full capacity of the bracing member.

I. The horizontal crane rail support has been strengthened to resist the higher crane forces resulting from the Hosgri motions.

J. The exterior plate-girder columns have been strengthened to resist the higher axial loads and bending moments.

K. Some floor beams have been strengthened to accommodate the Hosgri related equipment or piping loads.

L. Additional columns have been installed to support interior concrete block walls separating the Design Class I switchgear.

The significant modifications are illustrated in Figure(s) 1 through 6.

The mathematical models of the building, revised to incorporate the structural modifications, were re-analyzed for the Hosgri motions. The results of this re-analysis showed that some vertical steel bracing members on the north and south ends of the building required additional analysis to determine the ductility requirements of those members. The results were within the ductility limits in the criteria.

The remaining elements were within allowable stresses. Representative elements, comparing computed and allowable stresses, are shown in Table 1.

The Turbine Pedestal, sharing a common foundation with and located within the Turbine Building, was analyzed for the same horizontal and vertical response spectra as the Turbine Building itself. Damping equal to 7% was used in the analysis in accordance with Regulatory Guide 1.61. Based on a number of tests, the actual in place strength of the concrete was determined to be 6,000 psi. This value was used only for the determination of shear and torsion capacities. All response analyses used the strength determined at the time of construction. A yield strength corresponding to the average test value was used for the reinforcing steel.

A three-dimensional finite element model was used in the analysis. In addition to seismic and dead load, loads associated with normal operating torque and short circuit torque were considered in the analysis.

A review of the Turbine Pedestal members when subjected to the Hosgri motions revealed two structural problems. First, the maximum combined displacements of the Turbine Pedestal and the Turbine Building in the east-west direction at elevation 140 exceeded the existing structural gap. In order to prevent any possible impact, the gap was increased to exceed the combined displacements.

In addition, the existence of axial tension due to the east-west earthquake combined with high shear and torsional stresses resulted in three sets of Turbine Pedestal columns exceeding estimated capacities. In order to eliminate the

seismic-induced tensions, a system was designed to post-tension the columns. This is accomplished by drilling holes in the piers, inserting high-strength cables injecting grout to provide bond, and post-tensioning the columns up to a maximum of 200 psi. The post-tensioning bars are anchored in the foundation or the rock below the foundation, as required. With the elimination of the axial tension, the allowable stresses for the pedestal members would not be exceeded and together with the gap enlargement, possible impact between the Turbine Building and Turbine Pedestal is prevented.

In conclusion the Turbine Building, with the substantial modifications discussed above, is capable of withstanding the Hosgri earthquake.

TABLE 1

TURBINE BUILDING

CRITICAL SHEAR ELEMENTS

Shear Element	Critical Stress Item	Maximum Stress or Load	Allowable Stress or Load
Concrete Shear Walls	Shear Stress, v Reinforcing Stress, f_s	360 psi 50.8 ksi	372 psi 51.4 ksi
Concrete Buttresses	Shear Stress, v	202 psi	321 psi
Drilled Concrete Caissons	Compression Uplift	810 kips 570 kips	1,260 kips 1,000 kips
Vertical Steel Bracing (N/S)	Axial Stress, f_a	21.9 ksi	23.8 ksi
Steel Bent Columns	$\frac{P}{P_y} + \frac{M_x}{1.18M_{p_x}} + \frac{M_y}{1.18M_{p_y}}$	0.99	1.00
Concrete Floor Slab at Elevation 140 ft	Shear Stress, v Chord Stresses, f_s	365 psi 38.9 ksi	406 psi 44.0 ksi
Rock Bolts	Uplift	83 kips	84 kips

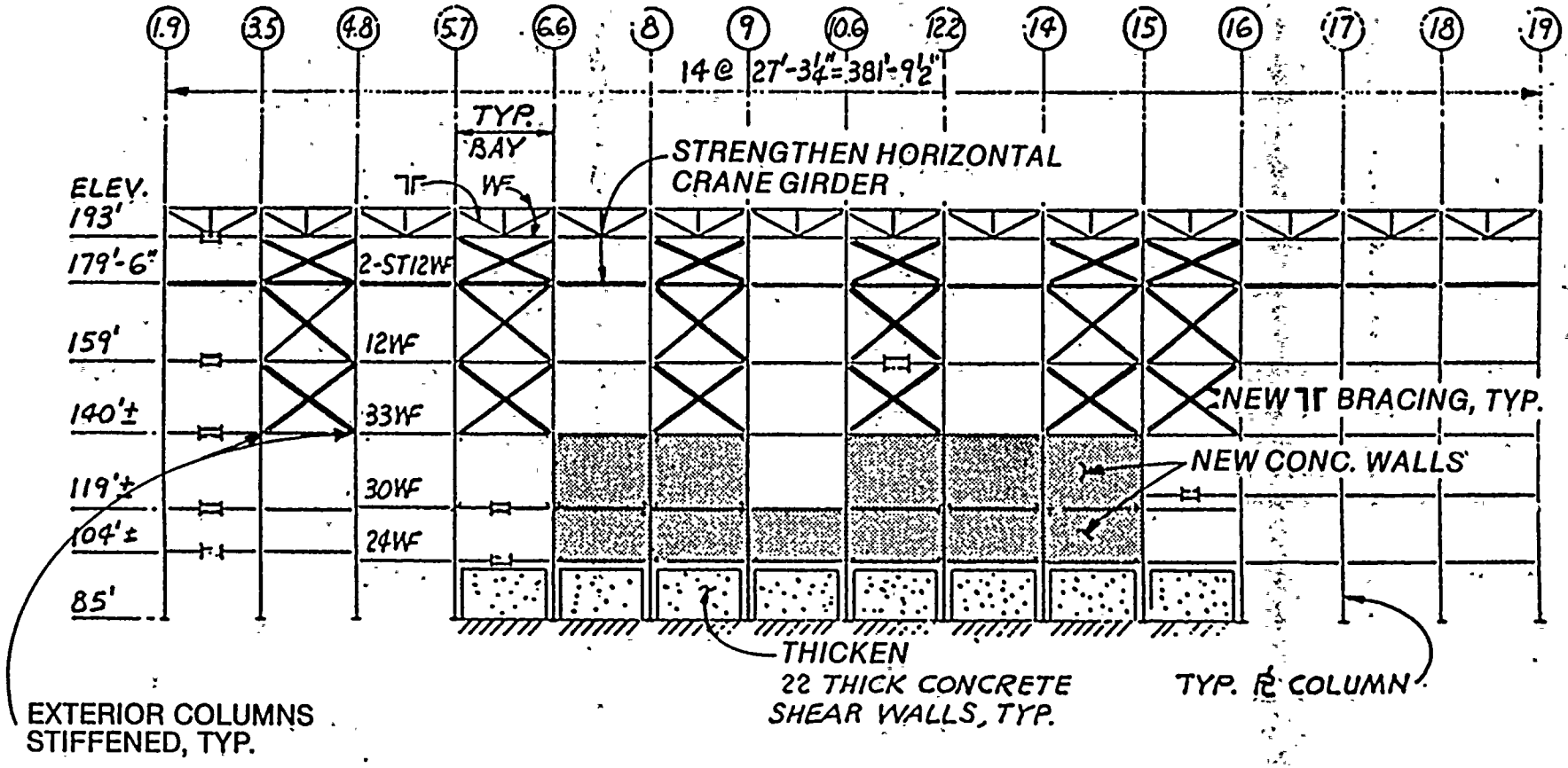

NOTE: EAST ELEVATION FRAMING SIMILAR

FIG. 1 — WEST ELEVATION FRAMING

NO SCALE

JOHN A. BLUME & ASSOCIATES, ENGINEERS

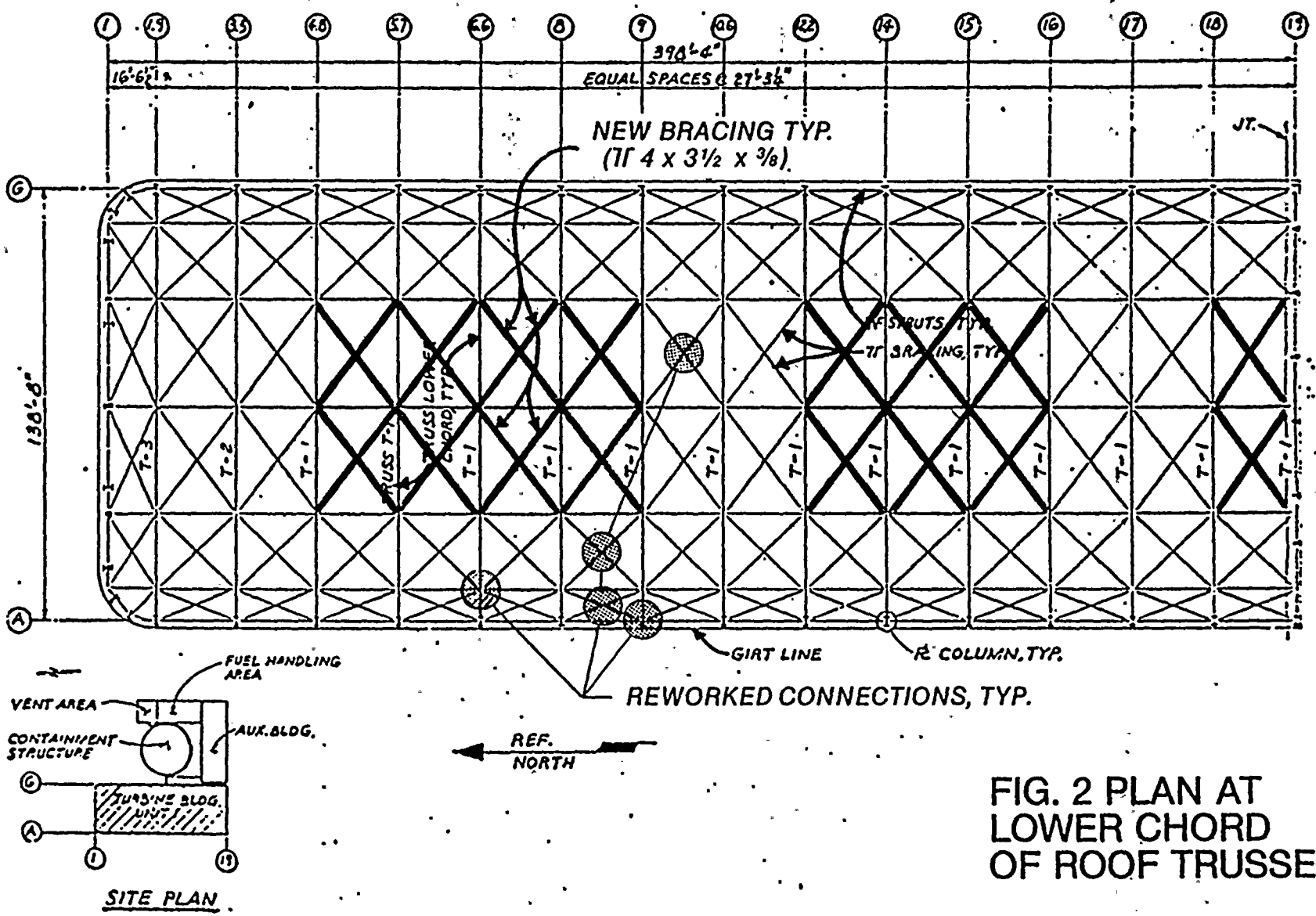

FIG. 2 PLAN AT LOWER CHORD OF ROOF TRUSSES

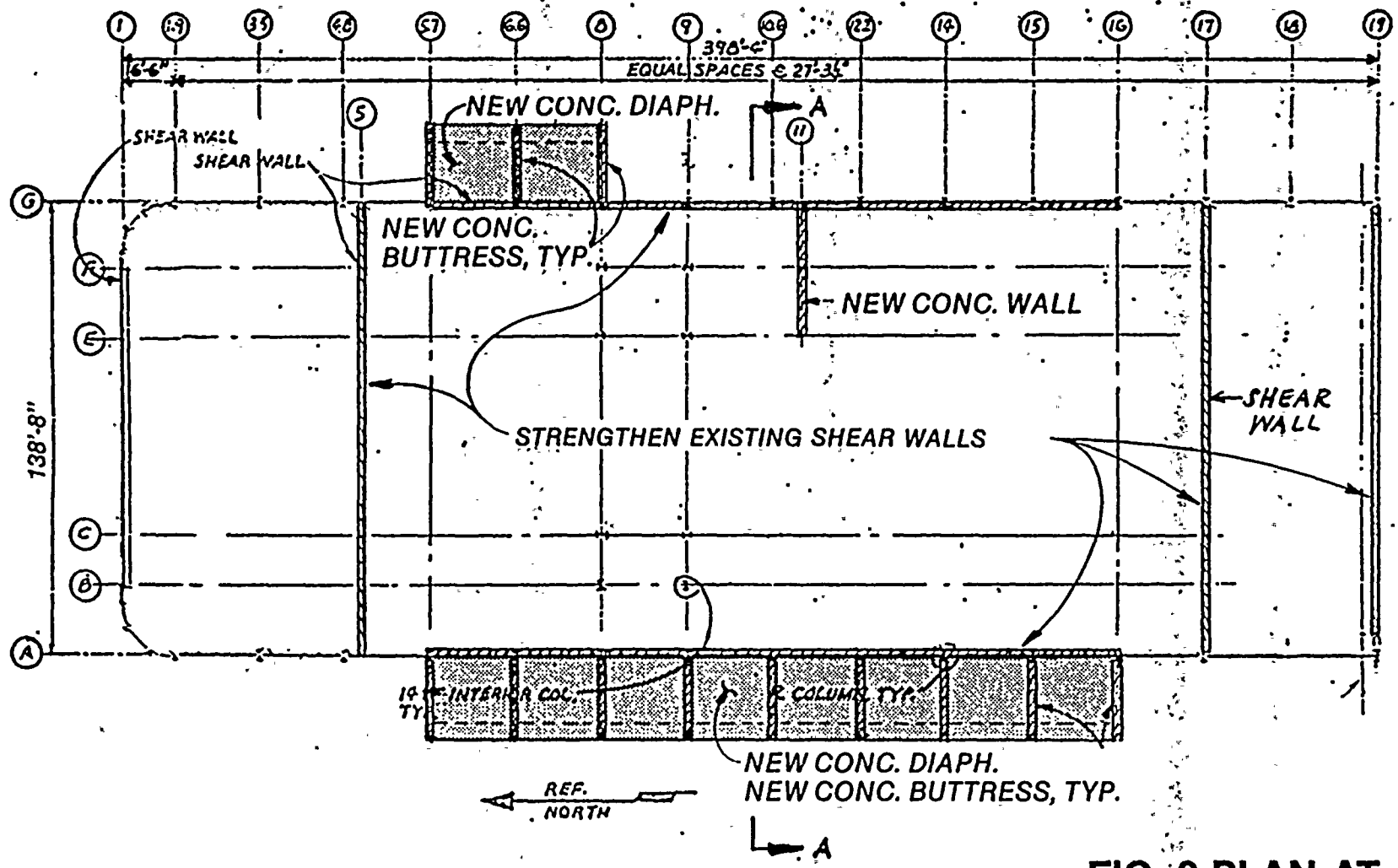

FIG. 3 PLAN AT ELEV. 85'-0"

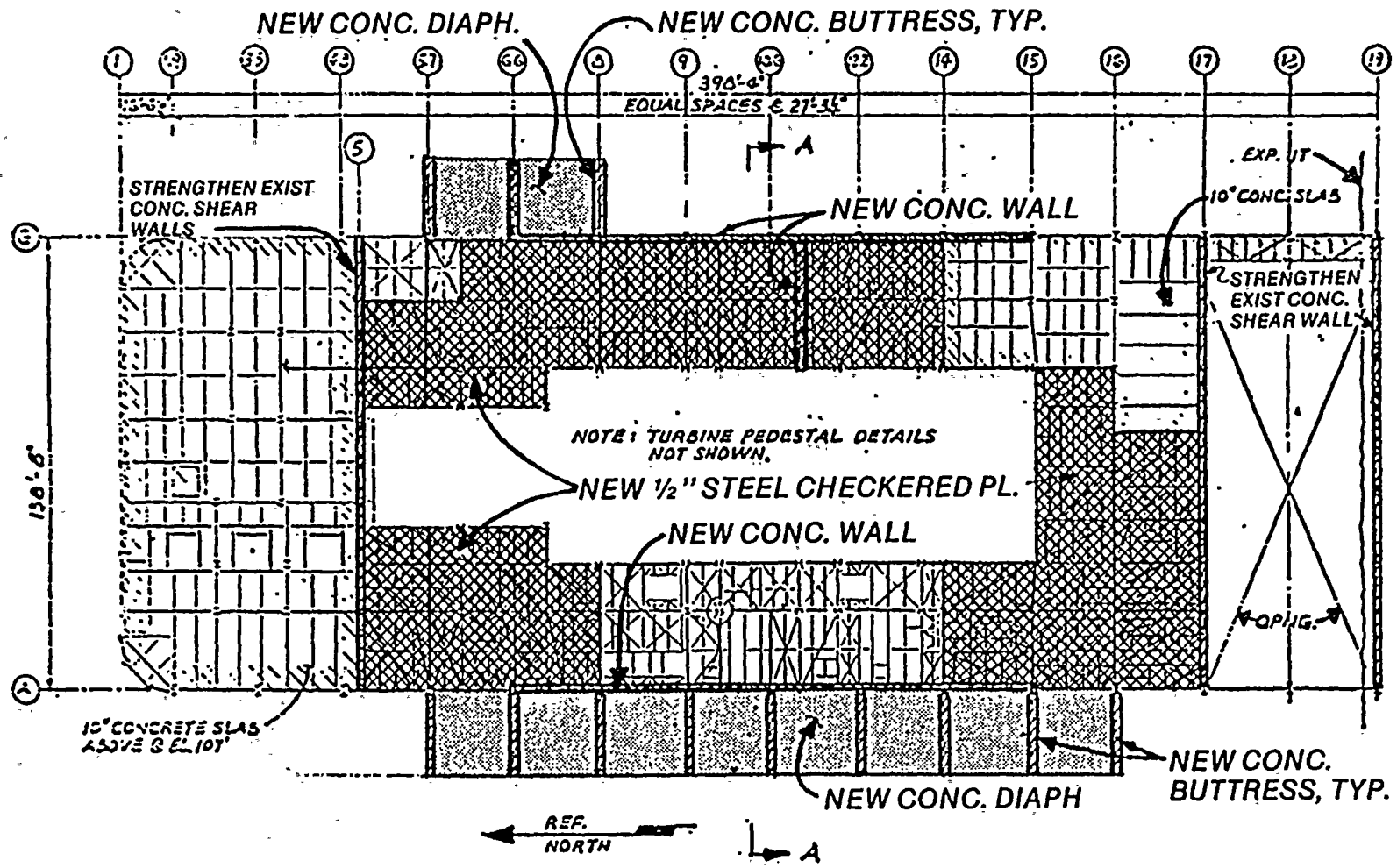

FIG. 4 PLAN AT
ELEV. 104'-0"
(ELEV. 119'-0" SIM.)

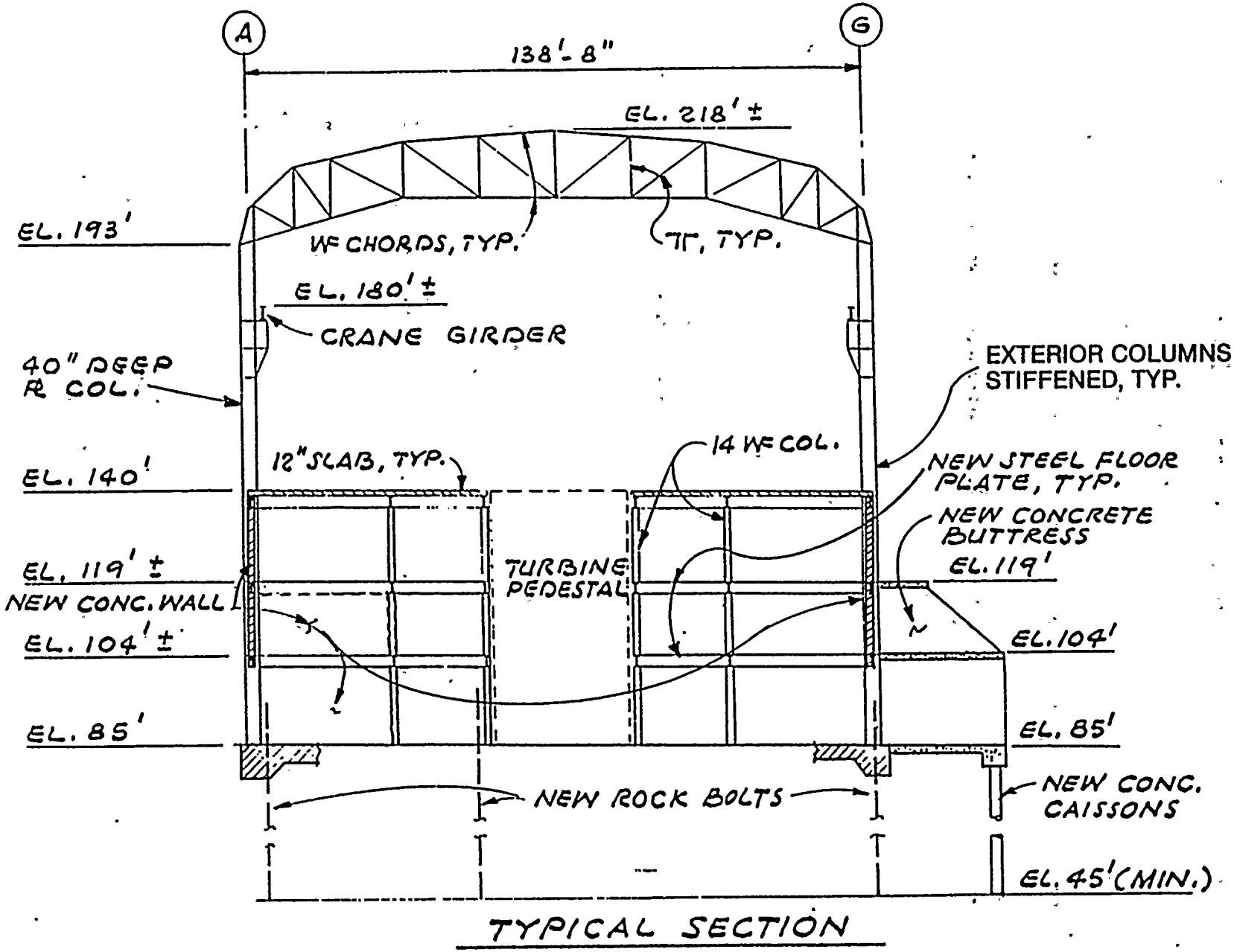

TYPICAL SECTION

DIABLO CANYON
TURBINE BUILDING

FIGURE 5

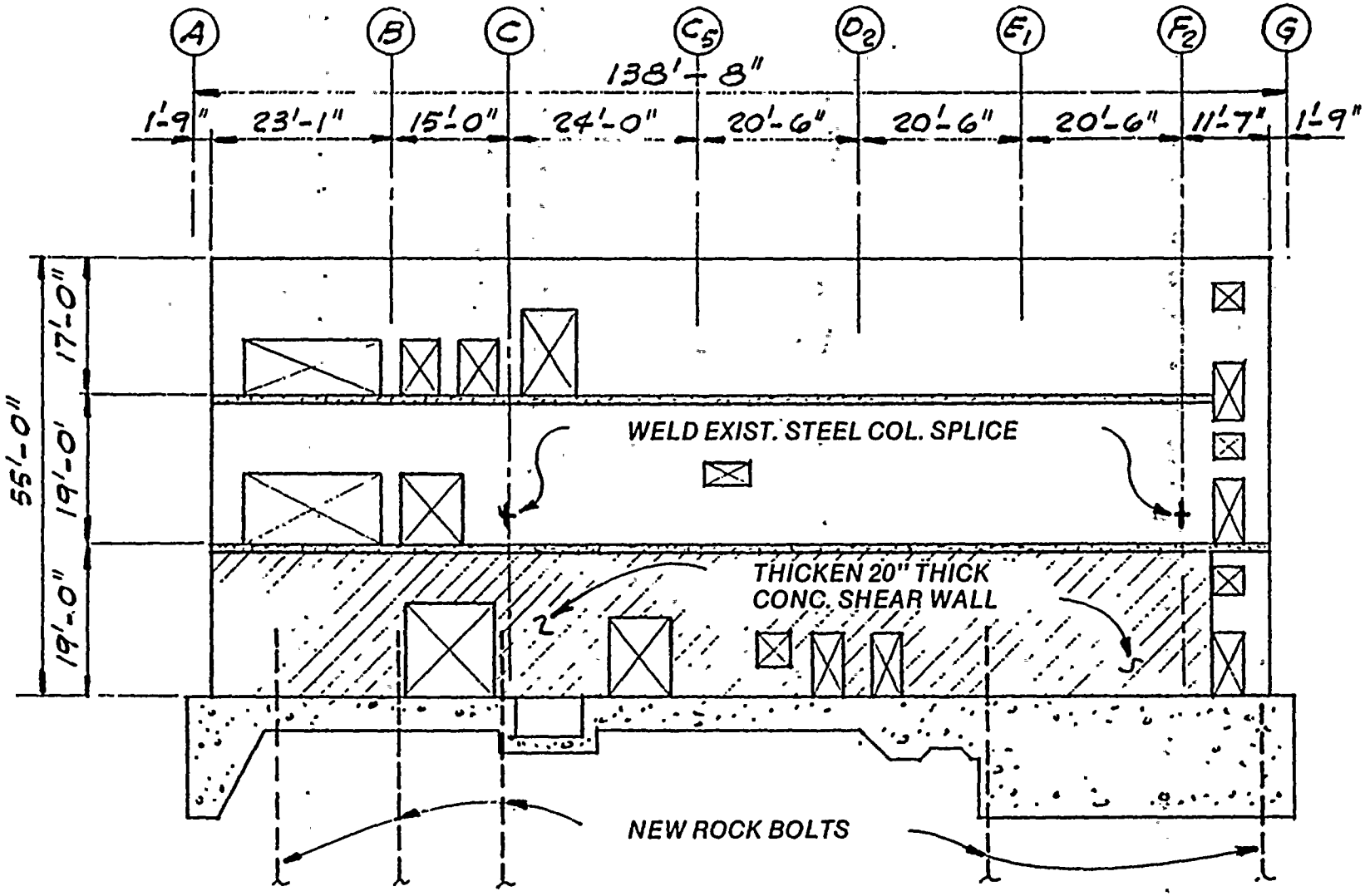

SHEAR WALL ELEVATION

LINE 19

(LINE 17 SIMILAR)

FIGURE 6

1A cont'd
wrb/agbl

MR. NORTON: At this time, we would pass this panel for cross-examination.

MRS. BOWERS: Maybe there's one piece of business missing. Do all the panelists adopt this testimony?

MR. NORTON: Yes, that's true with all of these panels. We can formally ask it, but they all worked on these buildings and all worked on this testimony, that's true of all of these panels regarding the structures and the equipment and so on. It happens to be true of all of them.

MRS. BOWERS: All right.

Have you concluded the direct?

MR. NORTON: Yes.

MRS. BOWERS: Mr. Kristovich.

CROSS-EXAMINATION

BY MR. KRISTOVICH:

Q Just for the record, does each and every member of the panel adopt the testimony as his own, and if not, please indicate?

A (No response.)

MR. KRISTOVICH: Let the record show that no one has indicated, so each panel member does adopt the testimony as his own.

BY MR. KRISTOVICH:

Q To Mr. Ghio, turning to Page One, Lines Nine and Ten, by using the term "spatial averaging of accelerations," do you mean tau effect?

wrb/agb2

A (Witness Ghio) Yes.

Q How were the spectra adjusted for tau for the zero period acceleration?

A I'm sorry, would you repeat that question?

Q How were the spectra adjusted for tau at the zero period acceleration?

A (Witness Blume) I'm looking for it in my original direct testimony, it's all in there.

Q Page 43?

A Yes, it's on Page 43.

Q For both the Blume and the Newmark spectra?

A Yes.

Well, tau was taken as 0.08 under the Blume criteria.

Q Which reduced the g's to what?

A 0.08.

Q Which reduced the g's from 0.75 effective to what?

A I'm getting there, to 0.54g.

Q And what percentage reduction is that?

A I haven't calculated that. Anybody is free to.

Q Well, would that be -- if it's 0.75 to 0.54, that's a reduction of 0.21g, correct?

A Yes, at zero period, that's correct.

Q So that would be 0.21 over 0.75?

A Yes.

Q Which is approximately 28 percent, is it not?

wrb/agb3

A Somewhere in that range, yes.

A (Witness Ghio) That's correct.

Q And for the Newmark spectra?

A (Witness Blume) The Newmark spectra used a tau value of 0.067 and the effective zero period acceleration was 0.50g.

Q So, for the Newmark spectra, that would be a reduction from 0.75 to 0.50 or 33 percent?

A That's right. At zero period.

Q Dr. Blume, what is the fundamental mode for the turbine building, and perhaps you could refer to Figure 16 or 17.

A It has changed several times due to strengthening and stiffening. I think I would ask one of the other panel members to give me the latest fundamental mode after the strengthening, if that's what you're referring to.

Q Yes.

A Dave hasn't had a chance to talk.

(Laughter.)

I think it might be easier for the Board and also for me if you would use Figure 16 or Figure 17 from Dr. Blume's testimony, the figures that deal with the turbine building.

MR. NORTON: Mr. Lang, perhaps you could give the numbers before and after strengthening, the two numbers.

WITNESS LANG: I'm afraid I don't have the number before strengthening.

wrb/agb4

The fundamental mode of vibration in the north-south direction for the turbine building is approximately 0.24 seconds. The fundamental mode in the east-west direction is approximately 0.8 seconds.

BY MR. KRISTOVICH:

Q So what would the tau factor reduction be of these fundamental modes?

A (Witness Lang) Well according to the spectra for the east-west direction, at that mode, there would be no reduction because the building is so flexible.

Q And in the other direction?

A For the north-south direction, that would have to be computed based on the accelerations for the two spectra. I don't know what those values are.

A (Witness Blume) The original value, without any tau reduction, was about 1.8 at that period. And appa it is now 1.5 at that period, so we can refer to our mathematician here.

A (Witness Ghio) It's about 17 percent.

Q Mr. Lang, can you tell us what the damping was at those fundamental modes?

A (Witness Lang) The damping used was .7 percent.

Q For the concrete?

A For the concrete and the steel.

That value of 7 percent for damping is compatible

wrb/agb5

with the NRC regulations for bolted steel structures.

Q Well can you explain the difference between, perhaps referring to this figure again, can you explain the difference between using 7 percent and 5 percent for the damping at the 0.24, the fundamental mode?

A (Witness Blume) The only time 5 percent was used was in the original design.

Q Right, I'm asking you to explain for the Board's and for my education, explain the difference between using the 7 percent and the 5 percent.

MR. NORTON: Excuse me, Mrs. Bowers, I don't understand the relevancy of this. The NRC regulations call for 7 percent damping for bolted steel structures. The analysis was done pursuant to NRC regulations. It happens that the NRC regulations 10 years ago called for 5 percent damping, and so at that time 5 percent damping was used in the analysis.

But what we're talking about here is the Hosgri analysis, and it's Reg. Guide 1.61 which allows 7 percent damping.

WITNESS BLUME: 1.61.

MR. NORTON: 1.61, excuse me, allows the 7 percent damping. So why we discuss the 5 percent damping I don't understand the relevancy to these proceedings.

MRS. BOWERS: Mr. Kristovich?

MR. KRISTOVICH: Well Mrs. Bowers, it's my

wrb/agb6

understanding that Drs. Luco and Trifunac believe that 5 percent damping is a more appropriate figure, and I would like to -- and that's the same figure PG&E used originally, and I would like this panel to explain just the difference between using 5 and 7 percent.

MR. NORTON: Mrs. Bowers, Trifunac and Luco may well -- I don't know that that's accurate on both counts -- say that 5 percent is more appropriate than 7 percent, but that's an attack on the regulations and that's not appropriate in these proceedings.

MRS. BOWERS: I thought it was a Regulatory Guide.

MR. NORTON: A Regulatory Guide, that's correct. And that's a generic number, 7 percent, that's not just Diablo Canyon, that's 7 percent Reg. Guide, 7 percent damping.

MR. KRISTOVICH: Mrs. Bowers, it is a Reg. Guide, not a regulation.

MRS. BOWERS: With a Reg. Guide, as I understand it, Applicant can propose a different method of accomplishing the same thing. But when you're dealing with set percentages, you know, it would be a slightly rigid situation.

We'd like to hear from the Staff on this.

MR. NORTON: Mrs. Bowers, what puzzles us is that one of their contentions says we don't follow the regulations, and here we're following the regulation and they say we shouldn't follow the Reg. Guide, I don't understand. They can't have

wrb/agb7

it both ways. It's either relevant or it's irrelevant.

MR. KRISTOVICH: Mrs. Bowers, some of the damping is taken up in the effective acceleration reduction.

WITNESS BLUME: No.

MR. NORTON: That's contrary to the prior testimony which went into damping.

MRS. BOWERS: We'd like to hear from the Staff.

MR. KETCHEN: Mrs. Bowers, I think we're a little bit off the track. The objection, as I understood it, was Mr. Norton didn't understand the line of questioning, where we were going about the 5 percent and the 7 percent and that type of thing, that's where the first objection came up.

It seems to me that Mr. Kristovich was asking for some background information and some explanation from this panel of how we got from the 5 percent damping factor in the original design to the 7 percent damping factor that is now being used, and there was an explanation given.

The point I'm coming to is that I think it is a legitimate line of inquiry, to a certain extent, as long as it does explain that difference of why 5 percent at one time and 7 percent at another time. So that's our position, that it is a legitimate line of inquiry for a certain extent.

MRS. BOWERS: Well, but as I understand the Joint Intervenors' position, they're trying to establish that 5 percent is appropriate rather than 7 percent.

wrb/agb8

Is that correct?

MR. KRISTOVICH: Mrs. Bowers, actually we just want to show the difference between using 5 percent and 7 percent. And that was what the original question was.

MR. NORTON: Mrs. Bowers, I think Mr. Ketchen has misconceived both the question and my objection. My objection was that the difference between 7 and 5 percent is what they're after, and Mr. Kristovich stated that it's their position that 5 percent is appropriate as opposed to 7 percent. That is an attack on the Reg. Guide and it's not proper in these proceedings and that ramains our position.

MR. KRISTOVICH: What Mr. Norton just said was irrelevant to what my original question was. I'm merely interested in having Mr. Lang or Dr. Blume explain the difference between using 5 percent damping and 7 percent damping at the fundamental mode for the turbine building.

MR. NORTON: But Mrs. Bowers, we could also say that what's the difference between that and 3 percent and that and 1 percent and that and 9 percent and 11 percent, but it's not relevant. Seven percent was used. The Reg. Guides call for 7 percent. And to compare it with a bunch of different other percentages or any one other percentage isn't relevant.

MR. KRISTOVICH: It seems 5 percent is relevant.

MRS. BOWERS: Well the Board will consider this

wrb/agb9

(The Board conferring.)

MRS. BOWERS: The Board has determined that the record, it's appropriate for the record to show what happens when you go from 5 percent to 7 percent. So your objection is overruled.

WITNESS BLUME: Can you repeat the question, please?

BY MR. KRISTOVICH:

Q Could you explain the difference between using 5 percent and 7 percent at the fundamental mode?

A (Witness Blume) You mean the difference in the results if that were done hypothetically?

Q The difference in g levels.

end1A

1B

WRB/wbl

A The damping determinations were all set out in my direct testimony.

Q Dr. Blume, I don't believe you heard what I said. The different in the g levels.

A On the spectrum at the period--

Q At the fundamental mode, for 5 and 7 percent.

A All right. We'll do--

Q I believe you can refer to your Figure 16 in your testimony.

A We do this strictly as a hypothetical because we believe that 5 percent is not applicable. But we find on Figure 16 of my direct testimony at 5 percent and a period of .24 it reads about 1.71g, whereas at 7 percent it reads 1.5g. That's on the Blume spectrum.

On the Newmark spectrum--

Q Is that Figure 17?

A Yes, that would be Figure 17, for the turbine building. At the same period, about 1.3 -- would you say, Dave? --as compared to about 1.19 or 2, 1.2; it's hard to read very closely.

Q Okay. That's fine.

Mr. Lang, was this turbine building originally designed as a Category 2 structure?

A (Witness Lang) I believe it was, yes.

Q What is the difference in the design criteria for

WRB/wb2

Category 2 structures and Category 1 structures?

A I think that would be better answered by Mr. Ghio since PG&E is better able to handle a question regarding seismic classification of nuclear power plants.

A (Witness Ghio) The question was, WHat's the difference between the--

Q The design criteria for Category 2 structures and Category 1 structures.

A Okay. As I recall, the original criteria for structures classified as Category 2, design Category 2, procedures consistent with the Uniform Building Code would be appropriate, whereas Category 1 required a dynamic analysis for the operating basis, originally termed design earthquake and double design earthquake.

Q Were a lot of modifications therefore necessary because you had Category 1 equipment in a Category 2 building?

A Were a lot of modifications required when?

Q Now. For the re-analysis.

A Yes. I just presented a summary in my testimony, and the prepared testimony delineates the wide spectrum of modifications that were necessary to enable the turbine building to sustain a magnitude 7.5 Hosgri earthquake.

Q I guess what I'm trying to get at: Is the root cause of this because it was originally a Category 2 structure?

A Well that's not the total reason for the need for

WRB/wb3

the modifications. You have to remember that the magnitude 7.5 earthquake is substantially higher than the original prescription.

Q Right. But other buildings that were Category 1 structures originally did nothave to have as many modifications; is that correct?

A That's correct.

Q Were there any other structures that were originally Category 2 that were re-analyzed as Category 1?

A The intake structure is of the same nature.

Q Q Were there any other structures?

A No.

Q Mr. Ghio, turning to Table 1 of the direct testimony, the fourth column is labeled "allowable stress or load." Could you define allowable stress or load?

A I'll provide a response to the question, and I may ask for some amplification by Mr. Lang.

Q All right.

A The allowable stress or load is that which was derived using the actual material properties as the basis for the derivation of allowable stresses, using in the case of concrete the American Concrete Institute code formulations, and for structural steel we would have utilized the American Institute of Steel Construction code.

The values resulting from that application are

WRB/wb4

1 those listed in the fourth column of Table 1.

2 A (Witness Blume) May I add one brief thing to

3 that?

4 The actual values that Mr. Ghio mentioned for

5 the concrete were the actual test values at 28 or 60 days

6 as the case might be. The real actual values today are many

7 times that, at least several tens of percent higher than that

8 due to the aging factor which has been ignored in the analysis.

9 Q Was it ignored for the turbine pedestal analysis?

10 A Yes.

11 Q --this additional aging? Mr. Lang?

12 A (Witness Lang) For the pedestal analysis the

13 actual in-place strength of concrete was used.

14 Q The six-year average?

15 A Yes.

16 Q In your allowables did you utilize a capacity

17 reduction factor?

18 A (Witness Yokoyama) I'll answer that question.

19 Yes, we used a phi factor of .9 for reinforcing

20 steel and concrete elements.

21 Q Did you say a phi factor of .9?

22 A Yes, that's correct.

23 Q And that was for the concrete and what?

24 A That's for the reinforcing steel and the concrete

25 structures.

WRB/wb5

Q Mr. Yokoyama, is that true for the turbine pedestal analysis as well? Didyou use a phi of .9?

A I think Mr. Williams would be able to answer that question better than I.

A (Witness Williams) No, it's not true.

Q What phi did you use for the turbine pedestal analysis?

A One.

Q Why did you use .9 in one case and 1 for the turbine pedestal analysis, a phi of 1 for the turbene pedestal analysis?

A We were trying to do a realistic analysis of the evaluation as distinct from design. In the case of the turbine pedestal we believed that 1 was the appropriate value.

A (Witness Blume) I might be partially to blame for that. When I finally found out they were using .9 and .95 respectively I got a little excited. I think it's ridiculous to use phi factors on a structure already built and tested. The phi factors, as was mentioned yesterday, are in preparation of the unanticipated problems in the concrete mix and the placing of steel and other things. And I think a factor of 1 could have been used throughout.

Q Well, Dr. Blume, who was responsible for determining which phi to use, since it seems to vary?

A Who was responsible? I imagine that would be,

WRB/wb6

in the case of this plant it would be joint agreement after discussion between the NRC Staff and the people involved working on the structures. And also during audit. Many of these things were discussed during audit.

But if you're asking who's responsible for the original phi factors, they were committees of various organizations working on a different problem, namely, the design specifications for buildings yet to be built.

A (Witness Yokoyama) Can I add something to what Dr. Blume said?

One of the reasons I used .9 is, this is the modification. This is modification to existing structures. So we are specifying materials. We did not have test results on these materials. This is the reason we used .9 for this particular structure.

A (Witness Blume) --which would not be true for the pedestals. They were existing.

Q Mr. Ghio, did you do an OBE analysis for the turbine building?

A (Witness Ghio) No, an OBE -- better stated: DE analysis for the turbine building was not performed.

End 1B

WE[illegible]ils

Q There is Category-1 equipment in the turbine building, isn't there?

A Yes, there is.

Q Okay, Mr. Ghio, directing your attention to page 1 of the written testimony, lines 21 through 24, specifically line 22 and 23, what is the physical basis for assuming an accidental torsion of 10 percent?

A (Witness Ghio) I'll have Mr. Lang or Mr. Blume answer that.

A (Witness Lang) The situation here is similar to the fuel handling building described yesterday.

In the absence of a rigid diaphragm --

Q I'm sorry? I didn't catch that.

A The absence of a rigid diaphragm prevented the use of accidental torsion, as specified in the UBC. An analogy was made to the case of a simply supported beam, by taking a concentrated load and moving --

Q Excuse me. I can't hear what you're saying.

A To make the analogy between a flexible diaphragm and a simply supported beam, and take a concentrated load at the center of that beam and move it five percent, the reaction at the end of the beam increases 10 percent.

And so that analogy was used here.

The NRC Staff required justification of this analysis, and we did perform an actual torsional analysis

wel 2

1 considering the flexibility of the diaphragm of the turbine
2 building, and the 10 percent increase was shown to be conserva-
3 tive.
4 Q Okay, Mr. Ghio, are there any parts of the turbine
5 building that may go into the inelastic region during the
6 Hosgri event?
7 A (Witness Ghio) Yes, there are some limited cases.
8 However, the so-called inelastic excursion is within the
9 acceptance criteria.
10 Q Could you list those cases?
11 A Yes, I can list the case involving the end walls of
12 the turbine building. It involves structural steel bracing in
13 the end bents of the turbine building.
14 The other case may relate to the piers or columns
15 in the turbine pedestal where we evaluated the system for both
16 the Blume and the Newmark input spectra, with the Blume
17 spectra having been corrected by a ductility correction at
18 the front end of the analysis.
19 Q Are there any cranes that may go into the inelastic
20 region?
21 A Cranes?
22 Q Cranes.
23 A I'll have Mr. Lang answer that.
24 A (Witness Lang) No.
25 Q Well, Mr. Lang, does the location of the crane
affect the end bent analysis?

A Yes, it does. As Mr. Ghio described, an analysis showed that if the crane were parked at the end and the earthquake were to occur at that time, then the end bents-- certain members in the end bents would experience stresses in excess of yield.

Q Directing your attention to page 4, lines 19 to 23, what are the ductility limits?

A (Witness Ghio) The question was what are the ductility limits?

Q Yes.

A The question stems from the last sentence in the section that you just --

Q Yes. Well, line 23 reads:

"The results were within the ductility limits in the criteria."

Could you explain what the ductility limits are?

A Just a moment, please?

Q Sure.

(Pause.)

Perhaps you could explain what ductility is.

A (Witness Lang) Ductility limits in the criteria for steel members are three on an inter-storey basis, six locally.

What that means is that as the members stress beyond yield, it displaces far greater than it does under normal inelastic stresses, and if you were to take the final

1 inelastic displacement divided by the yield displacement, that
2 is the ductility.
3 The limit being three on an inter-storey basis means
4 that it can be displaced three times the yield displacement.
5 Q Were the criteria also six locally?
6 A Yes.
7 Q And what does that mean?
8 A (Witness Blume) Well, the three refers to a storey
9 by storey basis, and the six locally would refer to a possible
10 joint or some single element of a member that might locally
11 go to the limit of six.
12 As long as the average of the storey was three,
13 this would still be within the criterion.
14 I might note that for ordinary office buildings and
15 other structures that exist everywhere, ductilities in major
16 earthquakes will be many times this, in the order of 8, 10,
17 12 storey ductilities.
18 Q Mr. Ghio, is it true that your criteria for
19 impingement between the turbine building structure and the
20 turbine pedestal allowed for limited local structural damage
21 such as concrete chipping or spalling?
22 A (Witness Ghio) I don't recall that criteria. I
23 can relate that the modification that we've implemented here
24 involved enlargement of the gap that had existed between the
25 turbine pedestal and the surrounding structure, an enlargement

1 sufficient to prevent impingement. That is, the gap is
2 greater than the absolute summation of the displacements of
3 the two contiguous structures.
4 Q Well, could you turn to page 4-7 of the Hosgri
5 reanalysis? Do you have a copy of it there? Volume 1.
6 A I'm sorry, I don't believe we do have a copy here.
7 MR. NORTON: What's the page number again?
8 MR. KRISTOVICH: 4-7, actually beginning with the
9 last sentence on 4-6 and going on to 4-7.
10 BY MR. KRISTOVICH:
11 Q I'll read it to you, Mr. Ghio:
12 "The possibility of impingement between the
13 turbine building structure and the turbine
14 pedestal is considered in the response calcu-
15 lations with the assumption that limited
16 (controlled) local structural damage, such
17 as concrete chipping or spalling, is permis-
18 sible provided the overall safety of the
19 structures for the Class-1 equipment is not
20 impaired."
21 A (Witness Ghio) It sounds like a criteria statement,
22 all right, at the front end of the program. But it's really
23 a moot point at this point, because the actual analysis showed
24 what the depth deflections of the two structures were, and we
25 elected to enlarge the gap to prevent impingement and avoid the

1 necessity of doing any kind of analysis of this phenomenon.

2 Q So there will be no impingement?

3 A That's correct.

4 Q Directing your attention to page 5, lines 6 and 7,

5 it's stated that based on a number of tests the actual in-place

6 strength of the concrete was determined to be 6,000 psi.

7 What was the minimum specified original design

8 strength of the concrete?

9 A I'll have Mr. Li answer that question.

10 A (Witness Li) 3,000 psi.

11 Q Mr. Li, is it true that the average of the 28-day

12 samples of the concrete was 3,870?

13 A No. More than that. I think it was 3870 psi.

14 Q Excuse me?

15 A 3870.

16 Q 3870?

17 A 3870, right.

18 Q That's what I said.

19 Mr. Li, could you describe the test methods used to

20 get 6000?

21 A Yes, there were three methods that were used.

22 Number one, based on cylinder test.

23 Number two, based on Schmidt hammer test.

24 Q Did you say cement hammer test?

25 A Schmidt.

wel 7

1 A (Witness Blume) Schmidt, S-c-h-m-i-d-t.

2 A (Witness Li) Number three, based on core drill

3 sample test.

4 Q Could you describe the cylinder test?

5 A Cylinder test, when we pour concrete we made many

6 cylinders which were tested at the different stages, such as

7 at the 7 days, 14 days, 28 days, and so on and so forth.

8 Some of them were tested after 5 or 6 years.

9 Q How many were?

10 A I don't know how many.

11 Q Do any members of the panel know how many were

12 tested after six years?

13 A (Witness Ghio) Excuse me. You're asking how many

14 test cylinders we tested for the turbine pedestal?

15 Q Yes.

16 A I don't recall the count, but it's prescribed in

17 the appropriate ASTM or ACI standard for concrete testing.

18 A (Witness Williams) I believe it was of the order

19 of 20 or 30, maybe more. It's a large number.

20 Q Do you know what the spread in the data was?

21 A I don't remember offhand.

22 Q Do you know what the average was?

23 A It was over 6000 psi.

24 Q Mr. Li, could you describe the Schmidt hammer test?

25 A (Witness Li) Schmidt hammer is an instrument which

can test the concrete strength of the existing concrete.

Q And how does it do that?

A I didn't do that myself. Our research department did the work.

Q Do you know how the test is done?

A (Witness Blume) I can briefly describe it for you.

It's a non-destructive test where an instrument is used that has an impact against the surface of the concrete, and the amount of rebound can be calibrated to the actual strength of the concrete by various calibration tests. Carefully operated it gives a very good indication of concrete strength without breaking the concrete.

Q Do you know what the accuracy of the measurement is?

A No, it depends upon the operator, but I would judge within 5 to 10 percent at the most.

Q Mr. Li, could you describe the third test that was used?

A (Witness Li) We core drilled spacements for the six piers involved for the modification. We made two samples for each pier. The test method is just like in a cylinder test.

Q Mr. Ghio, can you explain the third test?

A (Witness Ghio) The third test he alluded to represented core -- c-o-r-e -- samples drilled, removed from the existing columns, piers, of the turbine pedestal.

These cylinders are removed and tested in a

wel 9

compression test machine similar to that, or perhaps identical to that that was used in testing cylinders cast at the time a concrete structure is originally poured.

It's basically the same thing, except we removed material that was in place, originally placed, in the piers.

Q What was the average compressive strength of these cores?

A Just a moment.

A (Witness Williams) Approximately 5200 psi.

Q And how does that correlate to the 6000 psi?

A There's very good research data available which shows the correlation between code values and an equivalent design compressive strength.

In the process of coring you get micro-cracking developed in the core samples, which reduces its strength. And if you apply the relationship between code values and cylinder strength values, it comes out about 6500.

Q Do you have any references of codes or standards that have that?

A I have reference to research in various parts of the world.

Q What would those be?

A (Witness Ghio) I believe that the references that he's citing are in a --

A (Witness Williams) They're in the turbine pedestal

report that was submitted to NRC.

MR. NORTON: Yes, in the turbine pedestal report.

BY MR. KRISTOVICH:

Q Mr. Williams, we have the report that we were given yesterday, and on page 11 there are a list of 10 references. Are you familiar with this?

A (Witness Williams) Yes.

Q Which of the ten references --

A I think 8 and 9. Maybe you'd better give them to me.

Q Page 11.

A I have it now. Yes, 8 and 9.

Q Mr. Ghio, with regard to turbine pedestal modifications, what are Dywidag couplers? It may be Duwidag. It's spelled both ways. It's either Dwyidag or --

A I can't -- excuse me.

Q It is either D-y-w-i-d-a-g or D-u-w-i-d-a-g.

A I can't tell you which is the correct spelling. I think the correct pronounciation is Duwydag.

Q Okay. Well, could you explain what they are?

A They're basically a device to couple reinforcing bars together that were used as anchors in the modifications to the turbine pedestal.

Excuse me. I stand corrected.

A (Witness Li) We are not using Duwidag method,

system. We are using VSL table.

A (Witness Ghio) The Duwidag system was one alternative that we had considered at one time.

I forgot that we didn't implement that one.

MR. KRISTOVICH: No further questions.

MRS. BOWERS: Staff, Mr. Ketchen?

MR. KETCHEN: One moment, Mrs. Bowers.

(Pause.)

MRS. BOWERS: Mr. Ketchen, it's a little early, but we could take a ten-minute recess, if you think that's appropriate.

MR. KETCHEN: I don't think so. I think just a couple of minutes.

(Pause.)

MR. KETCHEN: Mrs. Bowers, the Staff doesn't have any questions of this panel.

EXAMINATION BY THE BOARD

BY MR. BRIGHT:

Q My only problem is in Table 1, and I'm just not clear as to what we're displaying.

Maybe we could go back and you could tell me just how did these numbers come about, the maximum stress or load and the allowable stress or load.

A (Witness Lang) The maximum stress or load is that stress that's calculated in that particular member as the

1 result of our analysis, and that's described in the
2 testimony.
3 The allowable stress is that stress that is
4 calculated based on the average material strength of the
5 concrete or the steel, and the design code allowable formulas
6 listed in the AISC, ACI or the Structural Engineer's
7 Association of California codes.
8 Q What's the criteria -- I think I understand what
9 you did -- what criteria are placed on this allowable stress
10 or load? Is that the business of you'll remain in the elastic
11 region?
12 A That's correct. All these are based on elastic
13 stresses.
14 I want to mention that this is the highest stress
15 of each particular type of member.
16 MR. BRIGHT: Fine. Thank you.
17 BY MRS. BOWERS:
18 Q I want to ask a question that's bothered me for
19 a number of years. I spent 11-some years with the Corps of
20 Engineers, of course involved in construction contracts, and
21 I was also involved with the construction of Dulles Airport
22 for FAA.
23 When you take cores from in-place concrete, like
24 the turbine pedestal here, what then do you do to replace
25 that concrete? You don't leave the hole.

A (Witness Ll) It will be filled with concrete according to approved methods.

Q Well, but is it replaced with concrete of equal strength?

A Yes.

Q I think you testified there was something like 20 cores from the pedestal.

A Or greater.

Q Greater?

A Right.

Q So am I correct that the purpose is to try to reestablish the pedestal concrete as it was before the core operation?

A (Witness Ghio) Yes, Mrs. Bowers, that's the basic intent. Although we feel we've taken a sufficient number of cores to provide us good data for the analysis, they do in fact represent a rather insignificant amount of the mass of the total structure here. These columns we're talking about are of the order of 10 feet by 14 feet in cross-sectional dimension.

In any event, we do replace the material removed with a material that is of equivalent or greater strength.

A (Witness Blume) Perhaps Mrs. Bowers is worried about the bond of the new to the old. There are methods employed which ensure perfect bond between the plugged-in

concrete and the old matrix concrete; namely, pre-wetting the materials and then coating with cement, and then, finally, pushing in the new material under pressure.

So there's perfect bond, and it winds up as good a structure if not better than it was before.

Q The panel yesterday -- of course, some of you are repeats -- talked about various types of concrete. But now one specification that the Army Corps of Engineers used is to specify the slump. Is that correct?

A (Witness Blume nodding affirmatively.)

Q And of course they try to have it as low as possible, and contractors try to have it as high as possible because it's easier to work.

Was that part of the specification here?

A (Witness Ghio) Yes. Slump requirements would have been one of the parameters in the specifications for procurement of the concrete. You have to meet various constraints. The slump relates to the workability of the mix, and it has some relationship to its strength. And you have to consider what type of structure the material is going to be placed in.

You can't have too stiff a mix in some configurations. In any event, we did use slump as one of the specified parameters.

MRS. BOWERS: The Board has no further questions.

Let me check with the parties:

Mr. Norton?

CROSS-EXAMINATION ON BOARD QUESTIONS

BY MR. NORTON:

Q Dr. Blume, I would like to talk a little bit about this phrase, "code allowables" that we've been hearing about in discussion of all of the buildings so far in the analyses, and the use of actual material strengths, and so on and so forth.

First of all, when we talk about codes or code allowables, what codes are we talking about? I heard Mr. Lang use a term "design code."

What codes are we talking about?

A (Witness Blume) I think there's been a little confusion in general, and I'm glad to get a chance to try to clarify it.

There are various materials standards in the United States and elsewhere which specify how each material should be used in practice, including design.

Now, for example, we have the ACI, or American Concrete Institute, which sets forth standards for the use of concrete and the design of concrete.

We have the Steel Institutes, and we have brick manufacturers' specifications, and so on.

These are not really codes. These are, in my

1 mind, standards.

2 A code is, in my mind, a legally adopted specifica-

3 tion by some community, city, state or federal, that sets

4 forth what the basic design requirements are for such things

5 as floor loading, wind loading, earthquake loading, and maybe

6 other requirements.

7 Now, in complying with these codes -- so-called

8 codes -- you may reference in ASTM or ACI as a guide as to

9 how you use each material. But all of these materials codes

10 and standards are really not directly applicable to Diablo

11 Canyon, unless and until agreed to or required by NRC.

12 The reason for that is that we are so far above

13 the standards of normal codes that there's no comparison.

14 Q All right. But when we talk about code allowables,

15 for example, there were questions regarding the code allowable

16 of the strength of concrete where you specify, say, 3000 or

17 5000, and then you take 95 percent of that in your analysis.

18 I take it that is used -- that operation, that

19 analysis, is done prior to building the building, is that

20 correct?

21 A That is correct. That's in the design process.

22 Q All right.

23 Now, when you're doing an analysis on a building

24 that has been built, why don't you do that?

25 A Because I think it would be unreasonable if you

1 have the actual test values of the way it was built, why
2 not use them? Why put in a factor that no longer applies?
3 It's a factor of ignorance, is what it is,
4 because you're ignorant of exactly how the structure is going
5 to come out.
6 Q All right. So when you have the building built,
7 you don't have to use the ignorance, because you have the
8 exact numbers.
9 A You've got the results, that's correct.
Madelon fls 10
11
12
13
14
15
16
17
18
19
20
21
22
23
24
25

MADELON
mpbl c3

Q All right.

And in this case in this analysis of these buildings you used, then, what structures actually were as opposed to what they might be if you were specifying them to be built in the future?

A That's the way it should have been done in my opinion. The only exception is the one mentioned, I guess, by Ralph Yokoyama, that if you're designing a new structure, such as a buttress to a turbine building, then you use this 90 percent factor, according to conventional practice.

Q All right.

Let me ask one final thing:

In your professional opinion, then, is the analysis that was done using actual material strengths, average actual material strengths, acceptable practice in the engineering community?

A Yes.

MR. NORTON: I have nothing further.

MRS. BOWERS: Mr. Kristovich?

BY MR. KRISTOVICH:

Q Mr. Lang, directing your attention to Table 1, the fourth column, Allowable Stress or Load, for each of these items what was the capacity reduction factor that was used in determining the allowable stress load?

mpb2

A (Witness Lang) Well, in general if it's a shear element, a concrete shear wall, a capacity reduction factor of .85 was used. For any bending element in concrete the capacity reduction factor of .9 was used.

Q Was a capacity reduction factor used for each of these items?

A Perhaps Mr. Yokoyama can answer that better than I.

A (Witness Yokoyama) Yes, every one except for the steel bent columns; and that being steel, there is no capacity reduction factor.

Q Dr. Blume, does 50.55A of the regulations apply to codes and standards?

A (Witness Blume) Would you repeat that, please?

Q Does 50.55A of the regulations apply to codes and standards?

A I wouldn't know by number reference. I'll have to refer to someone else, maybe Vince.

A (Witness Ghio) I'm sorry, I'm hard pressed to answer that. I'm simply not familiar with what that -- I don't recall at the moment what that verse of the code states.

MR. NORTON: Excuse me, Mrs. Bowers.

I thought the purpose of recross was to cross on subject matters brought up on redirect.

MRS. BOWERS: Or by the Board.

mpb3

MR. NORTON: Or by the Board, yes.

I'm not sure what this has to do with any redirect.

MR. KRISTOVICH: I believe on redirect we were talking about codes and standards.

MR. NORTON: Yes. And your question regards about four pages of the regulations. And I'm not sure --

MR. KRISTOVICH: Dealing with codes and standards.

MR. NORTON: Yes. But I'm not sure what -- it's not specific at all.

MRS. BOWERS: So you'rs asking the witnesses about a code or a standard giving a number, and the number apparently means nothing to them. They can see the document.

MR. NORTON: Not only that, I think it calls for a legal conclusion on the part of the witnesses.

If he's asking them to interpret the law, 10 CFR Part 50 for them, for the attorney, I would object on that basis, that it calls for a legal conclusion.

MR. KRISTOVICH: Well, Mrs. Bowers, Dr. Blume, in his responses to Mr. Norton's questions, was trying to separate codes and standards. And I'm merely referring to Section 50.55A of the regulations, which refers to both codes and standards.

MRS. BOWERS: Does the Staff have a position.

(Pause.)

mpb4

MR. NORTON: Mrs. Bowers, we have no objection to the code speaking for itself. I mean, I don't quite understand the question. The code is the code and it says what it says.

And I don't know whether he's asking these witnesses what it says or what. If he's asking them what it says, it's four pages long.

MR. KETCHEN: Mrs. Bowers, if I may respond to your question, I agree with the dialogue that has gone before. I think there are a lot of bases for objections to the question, I think the main one being nonspecific. But I think I agree with Mr. Norton's statement, which I was trying to formulate in my own mind. The code is there and it does speak for itself, and it is four pages long, and it's very detailed and complex.

And if there is a specific question on it from those pages that can be asked of this panel, I think that should be done by a possible rephrasing of the question. But I think just the broad general question as it stands now is objectionable.

MR. KRISTOVICH: Well, Mrs. Bowers, Dr. Blume was trying to draw a distinction between codes and standards. I merely wanted to show that Section 50.55A refers to both codes and standards. And I think that's been done.

So we have no further questions.

mpb5

MR. NORTON: Excuse me, Mrs. Bowers.

First of all, that's very misleading. 50.55A deals with pressure vessels, piping, pump, valves; it doesn't deal with concrete structures, which is the subject. Concrete and steel structures was the subject matter of this panel.

I suggest Counsel read the section himself before he starts paraphrasing what it says.

MRS. BOWERS: Well, but C, Pressure Vessels; but A, Structures, Systems, Components.

MR. NORTON: Well, Mrs. Bowers, if you read it it is pressure vessels. If you read it carefully and read it through, it does not deal with the subject matter of this panel at this time at all.

And what I said is it doesn't make any difference even if it did, but it doesn't.

MR. KRISTOVICH: Mrs. Bowers, I was merely trying to show that Dr. Blume may have one interpretation of codes and standards and intervenors have another. And we are willing to move on.

MRS. BOWERS: Well, then, I really don't think a ruling is necessary. It essentially is a withdrawal of the question.

Maybe it's appropriate to take a ten minute break at this time.

(Recess.)

MPB2
c4 mpb1

MRS. BOWERS: We'd like to begin.

Mr. Kristovich, do you have further recross?

MR. KRISTOVICH: No further questions.

MRS. BOWERS: Fine.

Mr. Ketchen?

MR. KETCHEN: No questions.

MRS. BOWERS: Well, the Board has no further questions.

MR. NORTON: All right.

Then I guess we're ready for the next panel.

Mr. Ghio, are we on the intake structure now?

WITNESS GHIO: That's correct.

MR. NORTON: We need Mr. McLaughlin.

(The panel temporarily excused.)

Whereupon,

JOHN A. BLUME,

VINCENT J. GHIO,

DAVID A. LANG,

DAVID WILLIAMS,

JOHN A. MC LAUGHLIN,

and

MING E. LEE

resumed the stand as witnesses on behalf of the Applicant, and, having been previously duly sworn, were examined and testified further as follows:

mpb2

MR. NORTON: Mr. McLaughlin, you were sworn yesterday, I believe.

Then for identification, the only persons we're adding are Mr. McLaughlin and Mr. Lee, and that is L-e-e, Mr. Lee.

DIRECT EXAMINATION

BY MR. NORTON:

Q. Mr. Ghio, do you have any corrections to make to the direct testimony on the intake structure at this time?

A (Witness Ghio) Yes, one minor correction.

On page 3, line 21, the word "nonseismic" should read "no seismic".

Q. All right, Mr. Ghio.

At this time would you summarize the analysis done on the intake structure?

A Yes.

The intake structure has been evaluated for both the Blume and the Newmark spectra. After the tau adjustment was performed, the vertical spectra were taken as two-thirds of the horizontal. Seven percent damping and average material properties were used. A fixed base mathematical model using finite element methods was employed in the analysis.

Accidental torsion, in addition to the geometric torsion, was considered in the analysis. The stresses obtained from the torsional analysis were added absolutely to the

mpb3

1 results of the translational analysis. Stresses were computed
2 for all significant force resisting elements of the structure.
3 There are tables, or a table appended to the
4 testimony that summarizes the stress results. The only ele-
5 ments in the structure that required ductility were the walls
6 and the front of the structure. An analysis was made to
7 determine the ductility requirements of these walls, and the
8 ductility factor obtained was within the specified limits.
9 In addition, an analysis was performed which
10 considered the mass of these walls contributing to the genera-
11 tion of seismic loads, while at the same time offering no
12 seismic resistance.
13 This analysis showed all stresses in the structure
14 to be within allowable limits.
15 Stability analyses of the structure were performed
16 and resulted in satisfactory factors of safety for stability.
17 Bearing pressures at the seaward side of the structure were
18 calculated, and all results were within the allowables.
19 The testimony concludes with the statement that
20 the intake structure with no modification is capable of with-
21 standing the Hosgri earthquake without sustaining damage that
22 would impair the functioning of the design Class 1 auxiliary
23 saltwater pumps.
24 That concludes my summary.
25 Q All right.

mpb4 1 Mr. Ghio, I believe the day we adjourned the
2 last session you had testified a little bit about the intake
3 structure and you had testified, if I'm not mistaken, that
4 there would be some spalling theoretically upon the analysis
5 at the curtain of the intake structure.
6 Would you explain that a little bit more in
7 detail at this time?
8 A Yes.
9 I think the question was what would be the
10 consequences, or what is an interpretation of the results of
11 the analysis involving these front walls of the structure, and
12 I indicated that one could interpret it to represent the
13 possibility of some minor cracking and spalling of concrete.
14 I was asked to define what spalling of concrete
15 represented, and I believe I indicated and would still indi-
16 cate that in my view it represents relatively small pieces of
17 concrete located outside or beyond the curtain of reinforcing
18 steel in these piers dropping to the invert of the structure
19 with no resulting damage to any equipment or no blockage of
20 the waterways that are required to deliver the water demand
21 to the auxiliary saltwater system.
22 Q All right.
23 When you say "drop to the invert of the structure",
24 it doesn't mean anything to me. Maybe it doesn't mean any-
25 thing to somebody else. So what do you mean?

mpb5

A Okay.

The invert of the structure is the floor of the structure.

Q All right.

So in your opinion, then, any spalling or cracking of concrete that would take place would in no way affect the operation of the intake structure, is that correct?

A That's correct. It would in no way interfere with or disable function of the auxiliary saltwater pumps that are contained within the structure, nor would it damage the structure.

Q Let me ask: Do all members of this panel adopt this testimony on the intake structure as their own, and if not, please indicate so.

(No response.)

Let the record show that there is no response from the panel.

MR. NORTON: At this time, Mrs. Bowers, we would ask that the testimony regarding the Hosgri Analysis and the Evaluation of the Intake Structure be placed in the record as though read.

MRS. BOWERS: Mr. Kristovich?

MR. KRISTOVICH: No objection.

MRS. BOWERS: Mr. Ketchen?

MR. KETCHEN: No objection.

mpb6

MRS. BOWERS: Well, the testimony you've identified will be physically incorporated into the transcript as though read.

(The Hosgri Analysis and Evaluation of the Intake Structure follows:)

TESTIMONY OF
VINCENT J. GHIO
AND
DAVID LANG
ON BEHALF OF
PACIFIC GAS AND ELECTRIC COMPANY
DECEMBER 4, 1978
DOCKET NOS. 50-275, 50-323

HOSGRI ANALYSIS AND EVALUATION OF THE INTAKE STRUCTURE

The horizontal seismic inputs for the Intake Structure corresponded to the Blume and Newmark response spectra. These spectra were developed independently and adjusted for spatial averaging of accelerations to make them structure-specific. The seismic input for the structure in the vertical direction corresponded to the Newmark free-field spectrum, scaled by two-thirds. This spectrum exceeds the corresponding Blume spectrum virtually everywhere.

Damping of 7% was used in the Hosgri analysis. The concrete strength corresponded to the average cylinder strength of samples used in the construction of the structure. The average test value yield strength was used for the reinforcing steel in the structure.

A fixed-base mathematical model using finite element methods was used for the analysis. The floor slabs and most vertical walls were modeled as flat-plate elements to include both membrane (in-plane) and bending (out-of-plane) behavior. Some thick shear walls near the center of the structure was modeled as three-dimensional solid elements.

For the analysis of the structure due to an earthquake in the north-south, or long direction, the total mass of water contained within the structure was included as part of the mass of the structure. In other words, it was assumed that no water would flow into or out of the structure during the north-south earthquake motion. In addition a high-tide condition was used thus maximizing the total water mass within the structure. For the analysis due to the east-west direction earthquake motions it was assumed that water could flow freely through the intake openings and would impart relatively little additional mass to the structure.

Accidental torsion, in addition to geometric torsion, was considered in the analysis. The stresses obtained from the torsional analysis were added absolutely to the results of the corresponding translational analysis.

Shear stresses and bending moments were computed for all significant force-resisting elements of the structure. Table 1 shows the shear stresses compared to allowable shear stresses for representative elements resulting from an earthquake in the east-west direction. All stresses were well within the capacity of the concrete alone - no contribution from reinforcing steel was required. Bending moments were also small, typical of low, massive concrete structures.

Table 2 shows shear stresses for representative elements of the structure subjected to the north-south earthquake. With the exception of the lower center pier

wall, all stresses were within, and most substantially within, allowable stresses. All calculated stresses include the American Concrete Institute capacity reduction factor, $\phi = 0.85$, which represents an additional safety factor.

Table 3 lists the bending moments for representative walls subjected to the north-south earthquake. The only walls with calculated bending moments exceeding the allowable are the flow straightener walls at the front of the structure. These walls are subject to moments resulting from a combination of the deflection of the seaward wall above and the forces of the mass of water contained between the walls. Again, the allowable moment includes the American Concrete Institute capacity reduction factor, in this case $\phi = 0.90$.

An analysis was made to determine the ductility requirements of the flow straightener walls, using the computed elastic displacement of the wall as the maximum total displacement. The ductility factor obtained was within the specified limits. In addition an analysis was performed which considered the mass of these walls contributing to the generation of seismic loads while at the same time offering nonseismic resistance. This analysis showed all stresses in the structure to be within allowable limits.

Stability analyses of the Intake Structure were performed for the purpose of calculating factors of safety against overturning and sliding. Forces acting on the structure included the combination of seismic forces of the

structure and the static and dynamic lateral forces from the surrounding backfill. The resisting force due to the weight of the structure included the deduction for the buoyant force of the contained water. All analyses resulted in satisfactory factors of safety for stability.

The maximum bearing pressures at the seaward side of the structure were calculated and used to analyze the slabs, grade beams and walls resisting those pressures. All elements were found to be within allowable stresses.

In conclusion the intake structure, with no modification, is capable of withstanding the Hosgri earthquake without sustaining damage that would impair the functioning of the Design Class I auxiliary saltwater pumps.

TABLE 1

INTAKE STRUCTURE

MAXIMUM SHEAR STRESS,

EAST-WEST EARTHQUAKE

Element	Shear Stress* (psi)	Allowable Shear Stress** (psi)
Upper Walls		
North wall	30	120
Flow straightener	33	120
Auxiliary pump wall	61	120
Lower Walls		
End wall	35	120
Flow straightener	39	120
Pedestal	39	120

* Includes $\phi = 0.85$

** Nominal capacity of concrete = 120 psi.
Capacity of reinforcing steel included as required.

TABLE 3

INTAKE STRUCTURE

MAXIMUM MOMENTS,

NORTH-SOUTH EARTHQUAKE

Element	Bending Moment (kip-in./ft)	Allowable Moment* (kip-in./ft)
Upper Walls		
Flow straightener - Front	503	863
Flow straightener - Rear	1,190	2,276
Lower Walls		
Flow straightener - Front	2,166	1,726
Flow straightener - Rear	1,338	4,584
End wall	5,020	5,976

* Includes $\phi = 0.90$.

mpb1

MR. NORTON: Some day you and I are going to say that the same way.

(Laughter.)

MR. NORTON: I have no further direct.

MRS. BOWERS: Mr. Kristovich?

CROSS-EXAMINATION

BY MR. KRISTOVICH:

Q Mr. Ghio, was the intake structure originally designed as a Category 2 structure?

A (Witness Ghio) Yes, it was.

Q Is Category 1 equipment in the intake structure?

A Yes, there is.

Q Is the auxiliary seawater pump Category 1 equipment?

A Yes, it is.

Q And is that in the intake structure?

A Yes, it is.

Q Okay.

Directing your attention to page 1 of the written testimony, line 10, you refer to spatial averaging of accelerations.

This is tau effect?

A Tau filtering, yes.

Q And was the adjustment for tau effect made after reducing the peak instrumental acceleration of 1.15g to the

mpb2

.75g effective acceleration?

A Yes, it was.

Q And what was the adjustment for tau at zero period acceleration under both the Blume and the Newmark spectra?

A In the case of the Blume spectra the adjustment was from .75 to .67g.

In the case of the Newmark spectra it was from .75 to .60g.

Q So in the case of the Blume spectra it was a reduction of .8g, or approximately ten percent?

A That's correct.

Q And for the Newmark spectra it was a reduction of .15g, or approximately 20 percent?

MR. NORTON: Excuse me.

Let me correct the record. It wasn't a .8g drop, it was a .08g.

MR. KRISTOVICH: Excuse me, I misspoke, .08 for the Blume spectra.

BY MR. KRISTOVICH:

Q And for the Newmark spectra .15g or 20 percent?

A (Witness Ghio) That's correct.

Q What is the fundamental mode for the intake structure, Mr. Lang?

A. (Witness Lang) The fundamental mode for the

mpb3

intake structure in the east-west direction is approximately .04 seconds; in the north-south direction approximately .1 second.

Q And what was the adjustment for tau for the fundamental modes for the intake structure?

A Excuse me, we have to go back to Figure 16.

Q I think if you refer to Figure 15 of Dr. Blume's testimony --

A Figure 14.

Q Figure 14, excuse me.

A 12 and 13.

4.152 It's very difficult to estimate on this particular plot because the curves converge in that area. We could estimate that there would be very little reduction.

The reduction would be similar to that of the zero period acceleration.

Q Which is 10 to 20 percent, depending on whether you use the Blume or the Newmark spectra?

A That's correct.

Q Okay.

Mr. Ghio, how in the fixed base mathematical model which was used did you account for soil properties?

A (Witness Ghio) Well, with the use of a fixed base model the soil properties do not enter into the calculation.

Q Did you do an OBE analysis for the intake

mpb4

structure?

A Yes, we did. The intake structure was evaluated for the original seismic criteria for the design Class 1 structures, even though it was design Class 2. We did do an analysis for the design earthquake and the double design earthquake.

We found that the double design earthquake governed.

Q Governed in every case?

A Governed in the case of the intake structure.

Q Did you use constant vertical accelerations or dynamic vertical accelerations?

A We used unamplified vertical response.

Q Have you redone the DE analysis with amplified vertical?

A No, we have not. However, I believe that the Hosgri analysis has shown that the structure experiences no vertical amplification. And that kind of conclusion is independent of the excitation level. It's a property of the structure. The structure is rigid in the vertical sense.

Q Okay.

Mr. Ghio, directing your attention to page 3, lines 23 through 25, you talk about stability analyses for the intake structure.

On November 8, did the Applicant present a

mpb5

revised analysis for stability?

A There have been a number of analyses for stability. I don't recall the dates. November 8 may very well have been a date that we submitted something for Staff review.

Q Okay.

end
MADELON
WRBLOOM
flws

wrb/agbl
flwsMADELON

Q Mr. Ghio, I'd like to direct your attention to SER Number 8, Page 3-14.

A (Witness Ghio) Just a moment, please.

I have it now.

Q Okay, the last paragraph reads:

"Since then we and our consultants have reviewed the analysis which, after using the correct shear key area indicated a factor of safety on the order of 1.01.

"We and our consultants were not satisfied with this load factor of safety. The Applicant indicated, however, that this factor of safety was derived using unrealistically conservative assumptions to simplify the analysis.

"Consequently, we required the Applicant to quantify the conservatiems involved. At a meeting on November 8, 1978, the Applicant presented a revised analysis which quantified the conservatisms embodied in various parameters.

"The final result of these analyses indicated a factor of safety on the order of 2.2.when a more detailed study using realistic values was employed, thus relieving concern that

wrb/agb2

there would be unacceptable motion of the intake structure.

"The Applicant also indicated that, since there was no uplift predicted for the foundation slab, there would be no tilting possible for the intake structure. We and our consultants agree with the Applicant's approach. We will require submittal of a final report on the analyses to confirm these results."

Has such a final report on revised analysis been submitted to the NRC?

A Yes, it is.

Q And when was that done?

A I'm unable to quote a date, I'm afraid.

A (Witness Lang) It probably would have been a week after that November 8 date.

Q Was that sent to the service list also?

A (Witness Ghio) We don't know.

MR. NORTON: I believe informal audit, Public Document Room.

BY MR. KRISTOVICH:

Q Referring to the same paragraph I just read, Mr. Ghio, could you explain what approach led to a factor of 1.01?

A (Witness Ghio) I'll have Mr. Lang address that.

wrb/agb3

Q All right. Mr. Lang.

A (Witness Lang) Well as the paragraph describes, we used what we considered unrealistically high estimates of the forces that cause sliding or overturning, and we combined that with unrealistically low estimates of the forces that resist that type of motion.

Now when we calculated a factor of safety of 1.01, that doesn't sound like very high. But when we knew what the numbers were that went into that calculation, we weren't concerned. However, the NRC was not aware of all the conservatisms that went into those numbers, so they required a more realistic estimate.

Q And how did you modify the approach to give a factor of 2.2?

A Well there were a number of things. In the original analysis, we did not -- we ignored any bounding that occurs between the intake structure and the surrounding rock. The intake was poured against the rock, there's a significant bond that exists between the two, we ignored that originally.

In terms of the sliding forces or the overturning forces, we used an absolute sum of many different types of forces that occur of a dynamic nature, that is unrealistically conservative.

We later came back and combined many of these forces on an SRSS basis to take into account the fact that the

wrb/agb4

peaks don't occur at the same time. Those two are probably the most important factors that led to the revised number.

Q Could you tell us some of the other factors that were used, changes in assumptions, for example?

A No, I think those were probably the two most important.

Q But you did use other factors?

A I can look it up if you want me to.

Q Yes.

A (Witness Blume) While he's looking that up, I would like to state that the Bureau of Reclamation, in designing concrete dams on rock for earthquake resistance and for water pressure, has been using 500 pounds per square inch bond between the concrete and the rock. And as Dave Lang just mentioned, in this original analysis, they used zero. And this bond is very, very effective in preventing sliding and any tendency toward uplift.

I'd also like to mention, while I'm on the line here, that in my opinion a ductility of 1.3 that has been mentioned would not cause spalling but merely some minor cracking.

A (Witness Lang) I would say that the only two factors that were really significant were the difference in combination of structural responses and the inclusion of the bond between the concrete and the rock. There were a number

wrb/agb5

of other factors that we did not consider.

Q Well with regard to those two factors, how much of the change from 1.01 to 2.2 could be attributed to each one?

A That would be impossible for me to say right here. It would take a little work.

5.065

Q Well is it about half and half?

A I'd say half and half if I had to say right now.

Q Well what did you now use, what numbers did you use for the bonding between the rock and the structure?

A The number used was 500 psi.

Q And the basis for that?

A The basis for that was the Bureau of Reclamation report on the Auburn Dam that Dr. Blume described.

Q And is that relevant to the rock at the Diablo Canyon site?

A Yes, it is. That value is high enough that the critical plane now exists in the rock below the structure and not at the interface. And that value in the rock below the structure is approximately 21 psi, so even if the 500 is not accurate, it would have to drop a long ways before it got to 21.

Q Well in doing this analysis, what kind of rock did you assume was under the intake structure?

A Well that material is provided to us by our soil

wrb/agb6

consultants.

Q Did they tell you the kind of rock?

A The shear strength of the rock is 3000 psi.

Q And what kind of rock was underneath the Auburn Dam?

A I'm not sure right now.

Q Then how do you know they're comparable?

A (Witness Blume) The rock under the Auburn Dam is not quite the same but similar in many respects. I'd say it's much more complex. It has intrusions of volcanic material into sandstones and so on. We have sandstone at Diablo Canyon and siltstone. So there are many similarities.

But the point is the Bureau uses the value I mention not only at Auburn Dam but at other places with all kinds of rock.

Q Are those the only similarities?

A Well it's hard to find any two spots that far apart that are exactly similar, geologically.

Q Then what are the differences?

A In the nature of the rock, the amount of cracking, the intrusion, the volcanic intrusions and so on, but they are both rocky sites and the rock is cleaned down--the surface material is taken away, they're both cleaned down to expose the rock surface.

But as Mr. Lang pointed out, he's only taking

wrb/agb7

advantage of 21 pounds out of the 500, so they could almost do the same thing on soil.

Q Directing your attention to Page Three of the direct testimony, Lines 17 to 18, what was the ductility factor obtained?

A (Witness Ghio) I'll have Mr. Lang answer that.

A (Witness Williams) 1.89.

Q Is this Mr. Williams?

A Yes.

It depends on the assumption of the plastic hinge length. We took two cases of 5 percent of the distance in flexure and 10 percent. And I believe the numbers were 1.89 for the 5 percent plastic hinge length and a lesser number for the 10 percent plastic hinge length.

Q Wasn't the acceptance criteria 1.3?

5.140 A No, it is 3.

Q Well I'd like to refer your -- direct your attention to Page 3-13 of SER Number Eight.

A I think if there is a confusion here, it's over the way in which a response spectra is reduced. In this case, we used 1.3. But if we were doing a detailed ductility analysis the criteria states three.

Q Well I'd like to direct your attention to the third paragraph under Section Two which reads:

"The Applicant has performed the

wrb/agb8

additional structural analyses using two different techniques to determine the ductility required for these piers.

"The energy reserve technique resulted in a ductility ratio of 1.13 within the limit of 1.3 which is set forth in the structural specification. A more conservative technique, based on moment curvature relationship of structural members resulted in the ductility ratio of 1.52. We and our consultants have reviewed the above information."

A The figures I gave you were for local ductilities. These are displacement ductilities. I'm sorry, I should have clarified that.

A (Witness Blume) As the author of the Blume spectra and the resulting 1.3 allowable ductility that I recommended go along with those, that ductility was to be a story-type ductility.

In other words, the drift or distortion of a story or a unit of a structure and not the local. Local ductility, as I mentioned previously today, could be higher.

Q Well Mr. Williams, could you explain the difference between local ductility and displacement ductility?

A (Witness Williams) Sure.

They are related -- I'm not sure how I can do this

wrb/agb9

in lay terms.

Well, in scientific terms, they're related by integrating the curvature over the length of the member. The plastic curvature is concentrated in the plastic hinge zone. I could give you the relationship if you want it.

Q Yes, please.

Do you want to put that up on the screen so we can all see it?

A Sure.

MR. NORTON: Just read it. I mean, I don't know why he needs to have it marked as an exhibit, he can just read the numbers. We've got to get the screen out and everything. Is there any real need? I mean, if you ask the question he can answer it.

BY MR. KRISTOVICH:

Q I'm not sure what you're going to do with that.

A (Witness Williams) Well, I was going to give you the equation that relates the displacement ductility factor to the local curvature ductility factor.

Q Fine. Okay. Just do it slowly.

A The displacement ductility factor is equal to the integral between the limits of zero and L of X which is the distance along the -- maybe I'll define the terms later.

X times the curvature integrated with respect to distance divided by the integral between zero and L of X

wrMagb10

times the elastic curvature with respect to distance.

DR. MARTIN: What's X?

WITNESS WILLIAMS: X is the distance. It's a variable distance along the member.

end1C

1D

WRB/wbl

5.215

BY MR. KRISTOVICH:

Q Mr. Williams, in the Newmark spectra for the intake structure was any ductility allowed?

A (Witness Williams) No.

Q And why is that?

A I'm not sure.

Q Did the Blume or the Newmark spectra apply in the analysis here?

A (Witness Lang) The Newmark spectra applied here.

A (Witness Williams) I think I should add something. The Newmark spectra was not allowed to be reduced in lieu of a ductility analysis. There were p ovisions in the criteria which stated that in certain instances detailed ductility analysis could be performed.

Q And what instances are those?

A Well this was one case in which it was done.

A (Witness Blume) This is basically a Type 2 structure, or Category 2.

Q With Category 1 equipment in it.

A Yes. But as long as that equipment is not harmed or damaged by anything, why....

Q Mr. Ghio, could you define spalling?

A (Witness Ghio) Spalling represents the removal of surficial portions of a concrete element.

Q When you say "removal," do you mean chipping,

WRB/wb2

pieces falling off?

A Yes, pieces falling off.

A (Witness Williams) I would like to repeat what Dr. Blume said before, that for these lower ductility factors spalling is not even likely.

Q When you refer to spalling does this indicate the size of pieces that might chip and fall off?

A (Witness Ghio) Well the word "spalling" doesn't define the size. You asked this question earlier and I indicated that the size is somewhat indeterminate. But it has got to be constrained by the fact that the spalling would be limited to the sections of concrete located outside of the reinforcing steel curtain; within that the material is contained. So we have a few inches of material that exists outside of the reinforcing curtain. So the size of the spalled pieces is limited by that dimensional constraint.

Q And what would happen if spalling occurred during the Hosgri event?

A I think I previously testified that the material, should it actually spall -- and this is somewhat speculative -- would deposit itself on the floor of the structure.

Q It would fall down?

A Yes. That's the extent of the scenario.

Q Has an analysis been done to determine what would happen if there were a tsunami following the spalling?

WRB/wb3

5.290

A We have performed tsunami analyses for an event originating on the Hosgri fault and have shown the wave action to be sustainable by the structure.

I don't see that a few small pieces of -- postulated piece of concrete lying on the floor of the invert would affect that analysis in any way. --on the floor of the intake structure.

Q What I'm trying to get at, Mr. Chic-- Maybe I stated the question incorrectly. --is: Has an analysis determined, if there were a tsunami following the spalling, is there a chance that the material could be taken into the auxiliary water pump because of the tsunami?

A No, I don't believe so. We did do an evaluation of the potential for material associated with postulated spalled concrete working its way back to the auxiliary salt water pump bay locations. And because of the configuration beyond these front walls and the remaining portion of the structure inboard of that are unaffected by this earthquake in terms of spalling, there is no spalling anywhere else, we couldn't see any way that we could physically bring material from the front end of the structure back to the auxiliary salt water bays.

Q By a tsunami?

A By any kind of wave action, whether it's storm waves or tsunami or normal conditions.

WRB/wb4

Q Mr. McLaughlin, do you have anything to add to that?

A (Witness McLaughlin) You have to realize that the pumps are situated some thirty feet behind this area. The invert of these pumps are quite high above the floor of the intake.

Q How high?

A Something in the order of ten feet. So even if material got back there there's not enough material to pile up, or plug the pathway to the pumps.

Q Directing your attention to page 3, line 3 and also line 13, in both instances you refer to a capacity reduction factor.

Would you explain this?

A (Witness Lang) This is the capacity reduction factor that's been referred to many times earlier, often used in designing a structure. And in this case it happened to have been used in the course of an analysis, and it represents an additional safety factor.

Q Was this used in any other structures, this capacity reduction factor?

A This is the fourth of a series of structures. I think this has been covered in all the other testimony.

Q Was this used in the other structures?

A In some cases it was. And, as I think was described

WRB/wb5

earlier, in the pedestal it was not.

Q And why was it decided to be used in this structure?

A I don't know why it was used. The question is why it was not -- you know, probably should not have been used, to be consistent with a lot of the other analysis work. But I don't know why we should question why it was used. It's an additional safety factor.

A (Witness Blume) I'll have to repeat what I said regarding the other structure: that when the structure was there and existing and we know its properties, this should have been a factor of 1. I think the reason it was used is probably tradition of designers and possibly a result of some of the audit discussions. But in my opinion the factor could be 1 for any existing structure about which we know its properties and qualifications.

Q Well did any member of this panel pick this number for this analysis?

A (Witness Lang) Yes, these are the standard ACI reduction factors, the .85 for shear and the .9 for bending.

Q So, Mr. Lang, are you the one responsible for using them in the analysis?

A Yes.

Q Directing your attention to Table 2, the third column is entitled "Allowable shear stress, psi."

WRB/wb6

How do you calculate allowable shear stress?

A Allowable shear stress for a concrete wall is a function of both the concrete and the steel reinforcing.

Now in many of these walls the stresses were so low that what we used was just the contribution of the concrete alone. The equation for that is 2 times the square root of F-prime C, approximately 120 psi.

In cases where the stress on the wall exceeded that, then we did a more detailed calculation that considered the contribution of the reinforcing steel.

Q Did you use actual material values?

A Yes, we did.

Q The average of the actual material values?

A That's correct.

Q And was this 28 days or 60 days?

A Yes.

Q Which one?

A I'm not certain of the particular mix used in this. We could look it up.

(Pause)

28-day strength.

Q Well using the code minimum values for concrete strength and the appropriate capacity reduction factor what would the allowable shear stress be?

A Well if you were to take a given wall composed of

WRB/wb7

1 concrete and reinforcing steel, the equation 2 times the
2 square root of F-prime C plus PFY yields the total shear
3 capacity of that wall. That equation is relatively insensi-
4 tive to the concrete strength.
5 We made a calculation that showed that using the
6 24-inch wall, No.9's at 12 each way, increasing the concrete
7 strength 20 percent from 3000 to 3600 increased the shear
8 capacity of that wall 2 percent because of the major contri-
9 bution of that steel reinforcing to the strength of the wall.
10 A (Witness Blume) And also due to the fact that
11 the F-prime C, or the 28-day strength value, comes in as a
12 square root in a shear calculation.
13 Q So then the results are much more sensitive to the
14 steel value that is used?
15 A (Witness Lang) The shear stress capacity of a
16 wall would be much more sensitive to the reinforcing steel
17 yield strength.
18 Q What is the ratio, than, between the actual
19 material strength and the code minimum for the steel? --for
20 example, for the center pier of the lower wall?
21 A The average used for the intake structure was
22 49.6 KSI.
23 Q 49.6?
24 A Yes. That was a specified 40 KSI steel.
25 Q And what is the code minimum value for concrete

WRB/wb8

strength?

A Specified code minimum, 3000 psi.

A (Witness Blume) I should explain: K is 1000 pounds, for the record.

Q So the code minimum, then, is 40,000? For the 49,600 the code minimum is 40,000?

A (Witness Lang) Yes.

Perhaps "code minimum" is the wrong word; the specified minimum by the designer.

Q So you picked up approximately 25 percent, 9600 above the 40,000?

A (Witness Blume) I don't think we picked up anything. We just used the actual values.

Q Well you increased your allowables by approximately 25 percent.

MR. NORTON: Mrs. Bowers, I've try to clear this up in the last panel. Mr. Kristovich insists on ascribing a number to the code as an allowable. And these witnesses have told him over and over and over that that's not the way it's done. It's an improper question, it's a misleading question.

MR. KRISTOVICH: Mrs. Bowers, I believe yesterday we were talking about something different. Now we're talking about minimum values for concrete strength; we're not talking about code minimum values for stress. They are two distinct things.

WRB/wb9

MR. NORTON: Well, Mrs. Bowers, I think the record is very clear that counsel keeps talking about code numbers and the witnesses keep talking about values you arrive at from in-place materials. And they're not the same thing.

MRS. BOWERS: Well I thought the last question went to try to get a percentage here of increase.

MR. KRISTOVICH: That's correct.

MRS. BOWERS: And how does that relate to the code?

MR. NORTON: But, Mrs. Bowers, that's not a percentage of the increase from the code. And the witnesses over there are shaking their heads. The question is just improper. Maybe the witnesses can clear it up for Mr. Kristovich.

MR. KRISTOVICH: Well a percentage increase from the allowable stress.

MR. NORTON: But it's not an increase: that's the point. The question assumes a fact notin evidence. It's not an increase.

WITNESS LANG: It's an increase over a wrong number, an irrelevant number.

MR. NORTON: That's right. We might say it's not a concrete increase.

(Laughter)

WRB/wb10

BY MR. KRISTOVICH:

Q The number which was originally used?

A (Witness Lang) It's the number originally specified.

Q And used in your analysis?

MR. NORTON: Please let Mr. Lang finish his answer.

WITNESS LANG: The equations used to compute capacities are based on F-prime C -- excuse me; concrete strength, and the yield strength of the steel. Those equations are based on actual tests of actual strength, not specified strength. To use anything other than the actual strength is wrong.

End 1D
1E fls

1E
rb/agbl

530

BY MR. KRISTOVICH:

Q Directing your attention to Table 3, the third column on Table 3 refers to allowable moment. How do you calculate allowable moment.

A There are equations in the ACI that specify the calculation of allowable moment, based on the area of steel, the yield strength of that steel, and the compressive strength of the concrete.

Q And what is the sensitivity of this to the concrete strength used?

A Typically in underreinforced sections, which we have here very little, it's more sensitive to the steel reinforcing strength and area.

A (Witness Bluma) I think I have to explain the term "underreinforced." It does not apply to a deficiency in design, as a layman might think. It's a different type of design of concrete. You can underreinforce, which means that the concrete will control the value or you can overreinforce which means the opposite. But it has nothing to do with any deficiency in design.

Q In these allowable moments, did you use actual concrete and actual steel?

A (Witness Lang) That's correct.

Q The average of the actual?

A That's correct.

wrb/agb2

Q Well, referring to lower walls flow straightener front, what was the actual material values for concrete that were used?

A The same value used for the whole structure, I believe, 3,630 psi.

Q And was steel also used in coming up with the 1,726?

A That's correct.

Q And what would be the actual material value?

A 49.6 KSI.

Q And is this steel that has a minimum strength of 40 KSI?

A This is a steel that has a specified -- the designer some years ago, many now, I guess, specified 40 KSI yield steel.

Q Just to clear something up, in the FSAR when the use of the phrase "actual material properties" is used, do you mean the average of actual material properties? Is that how you're using that phrase?

A (Witness Ghio) Your citation there is to the FSAR, or -- I believe, or more properly to the Hosgri report?

Q Yes.

A In that case, the answer is yes, it means the average of the actual material properties.

A (Witness Bluma) I would like to remind you that

wrb/agb3

in my direct testimony of the other day, last week or so, one of the many conservative factors that I mentioned was this matter of specification of materials.

When you specify a concrete strength or a steel yield point or a steel ultimate, the supplier is under tremendous burden if he should fail to qualify. The net result is that he overprovides, so that very few, if any, samples will test below the specified limit. The result is the average value you obtain is far more than the specified amount.

Q What did you use for damping for the steel?

A 7 percent.

Q And for the concrete?

A 7 percent.

MR. KRISTOVICH: WE have no further questions.

MRS. BOWERS: Mr. Ketchen?

MR. KETCHEN: One moment, Mrs. Bowers.

(Pause.)

MR. KETCHEN: The Staff has no questions, Mrs. Bowers.

EXAMINATION BY THE BOARD

BY DR. MARTIN:

Q I notice at the top of Page Two, the sentence beginning in the middle of Line Four:

"...assumed that no water would flow into or out of the structure during the north-south

wxb/agb4

earthquake motion."

What period of time does that north-south earthquake motion cover?

A (Witness Lang) Well it would be consistant with the other analyses, approximately 24 seconds.

Q A fraction of a second?

A No, the earthquake extends for 24 seconds.

Q Oh, all right. I thought you said 0.24, excuse me.

A (Witness Bluma) The strong motion part of an earthquake, an actual 7.5, might last as long as a minute, but much of that would be very tiny vibrations. The strong motion is about 24 up to 25 seconds expected.

C6

Q So in actuality, if the pumps are going full speed, quite a bit of water could actually enter, is that right?

A (Witness McLaughlin) I think there is some confusion here, because --

Q Yes, I'm confused.

A Perhaps Mr. Lang could answer this better.

Q I'm trying to understand the implication of this assumption.

A (Witness Lang) This assumption has nothing to do with pump operation. The assumption refers to the mass considered inthe structure during the seismic analysis.

wrb/agb5

Q Oh, I see.

So you might have said that you'd assume the mass of water in the intake structure is constant during this period of time.

A Exactly.

Q Okay, so there's no change in the mass of water.

A That's right.

Q And I'm getting a little bit ahead now, but I notice in the next item of testimony dealing with tanks and so on, that consideration was given to the interaction between the tank and its contents.

A Right.

Q And I see no evidence here that there is any consideration of the interaction of water in the intake structure with the structure itself.

A Well the configuration is significantly different. In the storage tanks, the water, or the mass of the water plays a much greater part relative to the structure. In this case, the water is relatively minor.

We did do some hydrodynamic analyses which showed that the sloshing action of the water inside the structure did not cause any significant stresses.

Q Well this is what I was thinking about. It seemed to me that water would behave differently from a more rigid material.

wrb/agb6

So the reason it's left out is you did do some analysis and found out it wasn't significant; so in further studies you didn't include it?

A That's correct.

Q Okay. Thank you.

Oh, one other thing:

In the direction of spalling that you're talking about, is this spalling that's normal to a wall, or is it more like the kind of spalling you'd see from a cliff that would occur at the end of the structure? In other words, in the plane of the wall.

A (Witness Ghio) Well the walls that we're talking about that may experience some spalling are oriented with their long axis parallel to the incoming water flow, and the spalling occurs from the sides of those walls.

Q It's normal to the long plane of the wall.

A That's right.

Q Okay.

A (Witness Blume) If there were any spalling at all, which I doubt at these ductilities, it would be a flaking type thing normal to the wall. It would fall off and drop off.

Q Okay. I was trying to get that clear as compared to spalling along the long action where pieces at the end of the wall might fall off into the water at the intake. But

wrb/agb7

you're always talking about this flaking along the surface of the wall.

A Yes.

Q It's not an actual chunk at the end that falls off in that direction.

A If you can imagine a minor crack falling and little pieces might flake away from that crack, and the crack would be undoubtedly -- if it occurred at all, would be parallel to the wall, therefore, the flakes would be falling off normal from the wall.

Q Could this occur to such an extent that the wall might fail, or is it retained by its binding with the surrounding rock?

A At these ductilities, we are nowhere near failure of the wall. A wall can constain very massive cracking without actually falling apart. It's heavily reinforced and it's held together.

Q What you're talking about really is cosmetic damage, rather than any structural damage?

A That's correct.

Q Okay. Thank you.

BY MRS. BOWERS:

Q One term that's been used several times "audit" discussions, and I'm not sure exactly what's meant by that.

A (Witness Ghio) Well Mrs. Bowers, as a part of the

wrb/agb8

NRC Staff's review, detailed review, comprehensive and detailed review of the materials that support the analyses that we've summarized that we've been testifying to, the Staff undertook to review the supporting calculations in great detail and depth. And they visited with us for some time at our locations and at the locations of our consultants to review and discuss the manner in which we implemented the criteria here. And a reference to an audit discussion is a reference to those series of meetings.

Q I thought that was what it meant but it had never been explained.

MRS. BOWERS: The Board has no further questions.

MR. NORTON: Mrs. Bowers, I would like to ask a couple of questions, and I think these are more for the benefit of perhaps future readers of the record than they are perhaps for this Board. And they have to do with the types of analyses that are specific to this particular structure we're talking about, but my questions go to all analyses really and I can use this as a vehicle, I think. These questions are probably directed at Dave Lang and Dr. Blume.

REDIRECT EXAMINATION

BY MR. NORTON:

Q There were questions asked of you regarding, I believe, the analysis you did on the intake structure showing a margin of safety of 1.01, and then the analysis was done --

wrb/agb9

a different analysis was done increasing that margin of safety, I believe, to -- I forget the number now, 2 point something, I forget what it was.

As a layman, I sometimes get the impression that when you do an analysis and you come up with a margin of safety of 1.01, somebody says well, gee, that isn't very good, so you go out and you sharpen your pencils and you really don't do anything but come up with a different number.

I'd like you to respond to that kind of a question. What kinds of analyses are you doing where you increase those margins of safety? Are you actually -- is the analysis increasing the margin of safety or not?

A (Witness Blume) I think what's happening here is a series of iterations or trials where often a designer or an analyst will do a rather quick, economical analysis first and using conservative assumptions. And if he finds under those conditions that he's got what he considers an adequate margin, he knows that he's got the problem covered and he stops.

However, if he reaches a margin that is unsatisfactory to him or to a reviewer, he then naturally, instead of going out and modifying the structure on such a crude analysis, instead he goes into the matter in great detail and considers the factors that previously he had either ignored or assumed very conservative values for.

wrb/agb10

And on the second go-round, such as happened on this intake structure -- in fact, there may have been three of them -- as you can see, as you get into more and more of the fine detail and analyze it very, very carefully, you'll find that you're improving your safety factor because you're simply getting closer to the real fact.

Q Okay but you're not really improving the safety of the structure, or you're not really improving the safety factor. That's an absolute.

A The structure exists, all we're doing is getting closer to an estimate of what it's like.

Q All right.

So what you're saying then is the first run you take at it is where you use all the conservatism, and if it comes in, if the numbers come out in acceptable fashion there, you forget about it.

A Right.

Q But that's not to say that the structure is somehow less safe because it doesn't come in?

A That's absolutely correct.

Q All right.

And the analyses you've done and we've talked about here for the last two days, I take it, have varying degrees of conservatism in them.

A Yes.

wrb/agb11

Q And the reason some of them have more than others is because even with those large conservatisms, they come in with large margins of safety, is that right?

A Right.

Q Now one other thing that really is for the record, I think, and that is that we've talked about average material strength and then you were asked questions about the scatter of data, and I again don't remember exact numbers, but I think in some of the concrete samples we were talking about numbers that ranged from a low of, say, a number like 6000 to a high of a number like 7200 and you get an average of, say, 65- or 6600, for example.

Why do you not use the low value for your analysis? And the reason I ask the question is, I think of the old thing about the chain is only as strong as its weakest link. Why do you not use the low value?

A It would be unrealistic to use the low values, the one basic reason being that the material is spread throughout the structure. And these similar tests that are used to determine those values, the averages and the extremes, represent samples from different parts of the structure. And it's all mixed up together. We have to good, the bad and the high and the low and everything in there. So it would be complete unrealistic. We do not have a changed system in this problem.

wrb/agb12

Q Okay. Well I think that's what needs a little more explanation, because if you have a scatter of strength of links in a chain, even though that scatter is spread out through the length of the chain, the weakest link is going to break when you pull on the chain, the weakest link is going to break first.

Now why is it when you're talking about a concrete wall that that is not the case, that failure won't occur where you've got some concrete -- in the area where you took your core or you did you sample that is the low part of the scatter?

A Because the concrete in the wall represents the whole gamut of the cylinder tests from that wall. It's all mixed up together in that wall, so it's perfectly proper to use the average. It is not a chain situation. It's redundant. I think I can use that word redundant in the sense that the cylinders occur from samples throughout the whole structure.

Q One last thing, and this is specific to Table 2.

If I understand it -- I was a little bit confused at the questions and answers -- but if I understand it, in Table 2, under the allowable shear stress, those figures of 120, they didn't take --

Well, let me ask you this:

Did they take credit for steel in those walls, the steel reinforcing?

A (Witness Lang) No, they did not.

Q Then those numbers would actually be much higher if you did take credit for that, is that correct?

A Probably on the order of the center pier wall, 400, 500, somewhere in that range.

Q Okay.

So you took no credit for steel reinforcing or damping or anything there in terms of the steel?

A That's correct.

MR. NORTON: That's all I have.

FURTHER EXAMINATION BY THE BOARD

BY MRS. BOWERS:

Q Let's go back a minute to Mr. Norton's questions.

If you had cores that ran low, that were in close proximity to each other, would that change the situation?

A (Witness Blume) It would if it were in a single

member such as a column or a beam. If you had many cylinders taken from one column, for example, and they all tested low, that would mean that on the job that column would be rejected, taken out and replaced.

This is part of field control.

But in a wall, if the samples are varying -- and by the way, there's got to be some random variation, it's impossible to get all cylinders to test exactly the same, because of many factors.

In the wall you have this mixture. You don't have the situation of a single column or a chain effect.

There have been cases in actual jobs, especially in buildings where they may make a pour one day and have a bad load of concrete. That is discovered, and the whole thing is rejected, taken out.

BY DR. MARTIN:

Q One additional question:

You said there had to be some random variation. Could you give me an idea of a typical coefficient of variation?

A (Witness Blume) Yes, we have those calculated here in Report DLL-6. I'll turn to it. Just a moment, please.

(Pause.)

On page D-6A.3 of Report DLL-6, coefficients of variation are given for the three concrete mixes, A, B, and C,

and they range as follows:

6-1/2 percent for A; 9-1/2 percent for B; and 7 percent for C.

We consider those quite low, and it shows good concrete control in the field.

Q So there's some random variation, but really very little, as far as its being uniform?

A That's right, it's all fairly close to the mean or the median.

DR. MARTIN: Thank you.

MRS. BOWERS: Mr. Krostovich?

CROSS-EXAMINATION ON BOARD QUESTIONS

BY MR. KRISTOVICH:

Q Dr. Blume, if I heard you correctly in responding to Mrs. Bowers' question you referred to bad loads, if in certain columns the tests showed you had bad loads you would just take it out as a field control.

What if the test merely showed minimum loads?

A (Witness Blume) What do you mean by minimum loads?

Q Well, I understand that you do a series of tests and you get an average, and you have a minimum and a maximum.

A Right. We follow the specifications, and the specifications generally provide that if more than -- I think it's 10 percent, in some jobs it may be less than that -- but let's say for the moment 10 percent.

If more than 10 percent of the cylinders fall below the specified value, like 3000 or 5000, whatever it is, that rejects the whole thing. That's why the designer has to design 90 percent being stronger, and the average is always stronger than the specified value.

Q Is that 10 percent for the particular column, or 10 percent for all of the material?

A This is usually for a particular element, but it would apply to the whole job. You couldn't have either one happening, either in one column or for the whole job. And this is a matter of job control. It's pretty well set forth in the ASTM standards and ACI standards.

Q Did you examine the sensitivity by columns?

A I didn't. I know they had excellent field control out there. I personally was not the field inspector.

(Laughter.)

A (Witness Williams) That would be for each batch of mix.

Q Did anyone examine the average per column?

A (Witness Blume) We're dealing here with shear walls, not with columns.

Q But you referred to columns.

A I was referring to, in general, in the generic manner, to the outside wall. Most concrete rejections occur in buildings which have columns and beams, because they pour

all day, and if they find the columns are bad or the beams are bad, out they come. And it's a horribly expensive process.

Q Are there columns in the intake structure in the turbine pedestal?

A The turbine pedestal, I wouldn't call them columns. They're so massive. I would call them monoliths. They're on the order of 10, 12, 14, 16 feet across, and I wouldn't call those columns. They're piers.

Q And were averages done for those particular -- whatever you want to call them?

A I'm sure there were. As I say, I didn't personally do it, but I know they followed closely the normal procedures, and they're good procedures.

Q Mr. Ghio, perhaps you could answer. When they calculated the average, was it on a column-by-column basis?

A (Witness Ghio) We're talking about the turbine pedestal piers?

Q Yes.

A We had three types of tests that we cited as being utilized to form the average value that we used in the analysis. One of those tests represented cores from the individual piers.

MR. NORTON: Mr. Li -- I'm looking, but I don't see him here --- was on that panel, and he specifically

1 testified that they did -- I specifically recall his
2 testimony -- that they did do that.
3 MR. KRISTOVICH: I don't specifically recall that.
4 MR. NORTON: Well, read the transcript.
5 MR. KRISTOVICH: Point it out in the transcript to
6 me.
7 MR. NORTON: I will as soon as I get it at 9:00
8 o'clock tonight.
9 MRS. BOWERS: You asked a number of questions,
10 when he described the three methods.
11 WITNESS LANG: The Schmidt hammer test was also
12 on a pier-by-pier basis.
13 MR. NORTON: Yes, it was the Schmidt hammer--
14 remember, you couldn't understand him, you thought it was
15 "cement hammer?" Does that refresh your recollection about
16 his describing the tests on those piers?
17 MR. KRISTOVICH: I recall the questions. I'm
18 asking a specific question now, and I'm trying to get the
19 answer to it.
20 MR. NORTON: That was the question you asked of
21 him, and that was the answer. That was the answer to your
22 question.
23 BY MR. KRISTOVICH:
24 Q Well, Mr. Ghio, for the intake structure piers,
25 then, was this done on a pier-by-pier basis?

A (Witness Ghio) No, it was not in the case of the intake structure piers.

A (Witness Lang) As I described earlier, the strength of that pier is relatively insensitive to the concrete strength. If it had used a value of the specified minimum rather than the average, then the strength of that pier would probably drop only two percent.

Q Was the steel analyzed on a pier-by-pier basis for the intake structure?

A (Witness Ghio) Was the steel? Is that what you asked? Reinforcing steel?

Q Yes.

A No, it wasn't.

Q Mr. Lang, it is more sensitive to steel values, isn't it?

A (Witness Lang) That's correct. In any given pier there are a large number of bars. I don't know what the probability is that every bar in that pier would be the low value, but it's probably extremely low probability.

Q Have you studied the actual distribution of the strength of the steel in the piers?

A No. I'm not even sure that's available.

Q Mr. Lang, what is the ratio of the mass of water to the mass of the structure? I'm following up one of Dr. Martin's questions.

A. I don't have that number with me right now.

Q Is the mass of water 10 percent of the mass of the structure?

A It's such a complex structure it would be really difficult for me to estimate that right now.

MR. KRISTOVICH: No further questions.

MRS. BOWERS: Mr. Ketchen?

MR. KETCHEN: No questions, Mrs. Bowers.

MRS. BOWERS: The Board has no further questions of this panel.

MR. NORTON: I believe our next panel is Outdoor Tanks.

Mrs. Bowers, this panel will consist of Mr. Ghio, and Mr. Jhaveri comes back, Mr. Rocha of PG&E, who was previously sworn, and Mr. Yokoyama comes back.

Mrs. Bowers, at this time, before we get started on this panel, I have a couple of minor things:

One, Mr. Hanusiak, Mr. Sokoloff and Mr. Williams are finished with those panels, and Mr. Malik. They would like to be excused and leave. They were on panels yesterday. Mr. Williams, of course, was just on this past panel.

MRS. BOWERS: Mr. Kristovich?

MR. KRISTOVICH: No objection.

MRS. BOWERS: Mr. Ketchen, Mr. Norton asked that the four witnesses whom he doesn't intend to recall be

excused.

MR. KETCHEN: I have no problem with that.

MRS. BOWERS: All right. Then those witnesses are excused.

MR. NORTON: Thank you.

One other thing I thought I might ask, Mrs. Bowers, is we have the witnesses reviewing the transcript each night, witnesses that were on the stand that day, and there have been a number of corrections to the transcript, ones that are, you know, difficult words that the court reporter didn't understand, or the typist didn't understand, but somehow got it wrong, and so on.

I was going to ask what procedure you wanted to use for submitting the corrections to the transcript, because we are making a daily compilation of them.

MRS. BOWERS: As you know, the normal procedure is to wait until you submit proposed findings of fact. But also a normal procedure is for a party to bring up the following day some error in the transcript that has significance.

So I find it's a matter of if you don't feel that there is real significance, then I would suggest letting it go. But if you feel that --

MR. NORTON: Well, we do have somewhat of a problem. The number of witnesses -- you know, we used a

1 panel for each one of those, and the members of the panels,
2 particularly the first several weeks, would have to review
3 the transcript and we'd have that many transcripts.
4 So it would be very difficult to do on a day-by-
5 day, almost impossible to do. Because we always read the
6 transcripts between 9:00 and 10:00 at night, so it's almost
7 impossible to do on a day-by-day basis.
8 But I thought perhaps at the end of the case,
9 maybe before rebuttal or at some point in time like that,
10 corrections could be made that might be interpreted as
11 significant. You know, one person might think it was
12 significant, and another might not.
13 MRS. BOWERS: Let me say they could be submitted
14 at any time.
15 MR. NORTON: All right.
16 Now, the final thing I wanted to discuss was
17 scheduling.
18 I'm not sure -- I understood we were going to go
19 Saturday, but I wanted to check and make sure on that.
20 MRS. BOWERS: This is something that the Board
21 intended to raise today. Yesterday Mr. Hubbard, with tears
22 in his eyes, raised the question about Saturdays, and we
23 had an opportunity to discuss it further, prompted by that
24 inquiry, and we intend to go both Saturdays, the 6th and the
25 13th.

MR. NORTON: All right. That brings me into my question of, it appears as if we fill finish our case I would say no later than tomorrow, at this pace. I see Intervenors' counsel shaking his head "Yes."

I would expect we would finish. So that would mean on Saturday that Intervenors would begin to put on their case, and that's what I wanted to know, is who they were going to put on so we can prepare for cross-examination.

MR. KRISTOVICH: I understand that Dr. Brune is not available from the 4th through the 8th, so it would be Mr. Hubbard.

MR. NORTON: All right. Mr. Hubbard will be on on Saturday, and then you'd have no one for Monday?

MR. KRISTOVICH: Monday is the 8th, and Dr. Brune is not available until Tuesday.

MR. NORTON: All right. So we can prepare our cross-examination of their witnesses, that gives us some idea.

MRS. BOWERS: Well, but we don't know how long Mr. Hubbard will be on the stand.

MR. NORTON: That's right.

MRS. BOWERS: And if it so happens that Mr. Hubbard is not on the stand through Monday afternoon, does the Staff have -- I mean what do the parties suggest?

MR. NORTON: There's a possibility that Mr. Hubbard might be off the stand Saturday morning, also, which

wel 12

1 is the same problem.

2 MRS. BOWERS: Mr. Ketchen, do you know if the

3 Staff would be prepared to proceed with the understanding

4 that Dr. Brune would be taken out of turn?

Madalon fls5

6

7

8

9

10

11

12

13

14

15

16

17

18

19

20

21

22

23

24

25

mpbl
MADELON
flws
wel

1 MR. KETCHEN: Well, I would-- I would like to
2 have the Fifth on that one. I think I would like some dis-
3 cussion to see exactly what witnesses are going to be here
4 when.
5 But my initial reaction to the question is that
6 we will be prepared to start out with our direct case on the
7 8th. So I would like to double-check that with co-Counsel,
8 but I think we'll be ready to go whenever we finish this up.
9 MRS. BOWERS: Well, but I thought you said Dr.
10 Brune would not be available until after the 8th, is that
11 right?
12 MR. KRISTOVICH: That's my understanding. Mr.
13 Fleischaker will be here this afternoon and I think he's
14 been in touch with Dr. Brune and he may have more specific
15 information.
16 MR. NORTON: I believe we discussed among
17 Counsel, with Mr. Tourtellotte and Mr. Fleischaker and my-
18 self, that Dr. Brune would not be available until after the
19 8th. And frankly, if he were on Saturday I would need some
20 time to prepare cross-examination.
21 MR. KRISTOVICH: I'm pretty sure that that is
22 accurate, that he isn't available.
23 MR. NORTON: There's nothing we can do about it,
24 so that's the way it's going to be. But I'd like to be sure
25 that Mr. Hubbard is going to be here Saturday because I

mpb2

1 understood he wasn't going to be here Saturday.

2 MRS. BOWERS: Well, Mr. Ketchen, we're kind of

3 back to where we were. And I realize you might want to consid-

4 er this over the luncheon break. But the question is if the

5 Intervenors' available witnesses, and right now Mr. Hubbard,

6 if his testimony concludes prior to the close of business

7 Monday, would the Staff be able to go out of turn and put on

8 witnesses?

9 MR. KETCHEN: Our planning, as I understand it,

10 is to be prepared to go forward Monday. We were scheduling

11 for Monday.

12 MRS. BOWERS: Well, what about Saturday?

13 MR. KETCHEN: Saturday might create a problem,

14 if we finished early on Saturday. Our witnesses are scheduled

15 to -- as I understand our schedule, we would start out with

16 the geologists, and they are scheduled to be here ready to go

17 Monday morning first thing.

18 MR. NORTON: Mrs. Bowers, if we finished early

19 on Saturday it would not be lost time for the parties because

20 we have been busy preparing our direct case and we have some

21 preparation to do for cross-examination of Dr. Brune and Staff

22 witnesses too. So it wouldn't be lost time as far as we're

23 concerned. For example, if we finished Saturday at two o'clock

24 or something like that it wouldn't be lost time for us. We

25 would be able to use that time.

mpb 3

MR. KRISTOVICH: Mrs. Bowers, we would agree with that.

As you're well aware, we have the feeling that use of all day Saturday is not lost time. We could prepare for cross-examination.

MRS. BOWERS: Well, let me get back to Mr. Ketchen for a minute now.

Do you understand -- if I followed what's been said, your witnesses would start Monday morning, assuming that Mr. Hubbard's testimony is concluded. But then there would be the interruption when Dr. Brune is here Tuesday?

MR. KRISTOVICH: I believe Tuesday. All I know is he will be available after the 8th. On which specific day, I would have to talk to Mr. Fleischaker. We would attempt to have him here Tuesday.

MRS. BOWERS: Which could well be the interruption of the Staff's case.

MR. KRISTOVICH: Well, whatever is available to the other attorneys.

MR. NORTON: I would rather have Dr. Brune come at some point in time where it isn't an interruption in the middle of another panel or witnesses, at some natural break in the Staff's case.

I don't think it's fair to the Staff to have a witness on the stand, and then have someone come in, then put

mpb4

him back on again.

MR. KETCHEN: Well, I'm not sure, Mrs. Bowers, we're talking about that kind of an interruption.

I assumed that you meant interruption in the direct case as a whole, if that can be accommodated. I just think if you're asking the Staff, Mrs. Bowers, I don't think we have that much problem in scheduling and being prepared to continue in a logical way with the hearing. I just don't think we're going to have a break or any loss of time other than Saturday, if we finish early.

So I don't think we have a problem with the Staff's scheduling of witnesses.

MRS. BOWERS: Okay.

I just wanted to make sure that there was full communication because I thought that you intended to have Dr. Brune here Tuesday morning to proceed, and that could well run into interruption of the Staff's witnesses. And that is not appropriate.

MR. KRISTOVICH: I guess I'm a little unclear, then, when the Board and the other parties would want Dr. Brune to be here.

MR. NORTON: I think we can probably much easier decide that on Saturday when we've gotten to that point, and see where we are.

MRS. BOWERS: Fine.

mpb5

MR. NORTON: All right.

Whereupon,

JOHN A. BLUME,

VINCENT J. GHIO,

DILIP P. JHAVERI,

OSCAR A. ROCHA,

and

RALPH T. YOKOYAMA

resumed the stand as witnesses on behalf of the Applicants, and, having been previously duly sworn, were examined and testified further as follows:

DIRECT EXAMINATION

BY MR. NORTON:

Q Mr. Ghio, do you have corrections to the Hosgri Analysis and Evaluation of the Outdoor Water Storage Tanks testimony?

A (Witness Ghio) Yes, I do.

On page 3, line 1, remove the underlining of the word "pressure".

Line 12, change the word "at" to "near".

Q Which "at", the first one?

A Excuse me. The first "at".

Insert a comma after the word "base". Remove the word "to", t-o, the first one. Replace the words "at the midheight to" -- that's the last "to" -- with the words

mpb6

"throughout the height, and".

Line 13, remove the words "the upper part including".

MR. BRIGHT: Mr. Ghio, could I get you to read through that?

WITNESS GHIO: Yes.

Would you like me to read the entire statement the way it should read?

MR. BRIGHT: Yes, if you would.

WITNESS GHIO: Okay.

"Complete reinforced concrete encasement of the original steel shell varying in thickness from 36 inches near the base, 12 inches throughout the height, and eight inches for the top dome."

MR. BRIGHT: Fine.

WITNESS GHIO: Okay.

Line 22, change the number 4 to 5.

Line 23, change the number 5 to 6.

Now there are some additional corrections involving the tables that are attached to this piece of testimony. There is a new table, number 5.

MR. NORTON: These were passed out I thought when Mr. Ghio testified originally, and then we said that we were going to make these corrections later. But we're passing them out now again in case someone misplaced their

mpb7

copy.

BY MR. NORTON:

Q You've got a new Table 5. What happened to the old 5?

A (Witness Ghio) What was the old Table 5 has been renumbered Table 6.

Q Now what about Figure 3 that was passed out?

A Okay.

Figure 3, which precedes these tables, has been revised. There is a new table that is included in that package, or a new figure.

MRS. BOWERS: What happens to Table 6? We now have two Table 6s.

MR. NORTON: No. We passed out a new Table 5 and renumbered the previous Table 5 Table 6.

MRS. BOWERS: Okay.

MR. KRISTOVICH: I don't mean to interrupt, but is this Figure 3 different from the previous Figure 3?

WITNESS GHIO: Yes. Figure 3 has been revised.

MR. KRISTOVICH: In what way?

WITNESS GHIO: In what way? Well, the dimensions. If you look at the old figure, there are some dimensions given for the thickness of some concrete encasement of these tanks and those dimensions have changed, or at least one of the dimensions has been eliminated.

mpb8

MR. NORTON: The only difference I see is if you look at the upper right-hand portion of the figure, of the original figure there is the eight inch demarkation, and in your Figure 3 there is no eight inch demarkation.

BY MR. NORTON:

Q Is that the only change?

A (Witness Ghio) That's correct, that's the only change.

MR. NORTON: Well, Mrs. Bowers, we would ask, then, that everyone remove Figure 3, the original Figure 3 from the testimony, and insert the new Figure 3. And remove the original Figure 5 from their original testimony and insert the new Figures 5 and 6 -- Table 6. Excuse me. I said "figure" and I meant "Tables" 5 and 6.

MRS. BOWERS: In the copies that you'll be handing to the Court Reporter, will those show the new -- the substitutions?

MR. NORTON: Yes.

WITNESS GHIO: Excuse me, there is one additional correction to be made on the newly numbered Table 6, the one that you just received that was renumbered 6. It's entitled Refueling Water Storage Tank Strength Comparison of Concrete Elements.

BY MR. NORTON:

Q What's the change?

mpb9

A (Witness Ghio) The last column on the far right, the very last column on the table, the first number in that column is 92.18. It should be replaced by 51.6.

The next number in the table is 156.41, and it should be replaced by 77.4. And that applies to the next two entries in that column as well, that is the 156.41 is changed to 77.4.

That is all the corrections.

MR. KETCHEN: Mrs. Bowers, may I interrupt?

I'm a little bit confused about Table 5 in the original testimony which was renumbered Table 6. In the original testimony is that the same as the Table 6 that was in the handout?

MR. NORTON: Yes.

WITNESS GHIO: Yes, the content of the table is the same. The only thing that is changed is the table number.

MR. KETCHEN: Thank you.

MRS. BOWERS: And then that last column of corrections.

WITNESS GHIO: Yes, plus the corrections I just made in the last column.

MR. NORTON: I'm almost afraid to ask this question.

BY MR. NORTON:

Q Is the panel willing to adopt this testimony, as

mpb10

corrected, as their own?

A (Chorus of yes.)

Q Mr. Ghio, would you now summarize, please?

A (Witness Ghio) Okay.

The outdoor tanks that are discussed in this testimony consist of the refueling water storage tanks, condensate storage tanks, and a fire water and transfer storage tank. The tanks are 40 feet in diameter and average 50 feet in height, and were originally constructed as steel tanks founded on a concrete foundation on an engineered fill.

These tanks were analyzed for the Newmark free-field horizontal spectra, normalized to .75g, with no tau adjustment. Vertical spectra were taken as two-thirds of the horizontal spectra. Damping was taken as seven percent for concrete and four percent for steel.

The effect of interaction between the tank and the contained fluid was considered in the analysis. The structure was analyzed for dead load and hydrostatic load in addition to the earthquake loads.

Three components of earthquake forces were combined by the square root sum of the squares procedure. The analysis was made with the assumption of axisymmetry in the structure using a finite element model.

The testimony goes on to discuss the models in some detail. And then indicates that there were modifications,

mpb11

fairly substantial in nature, required for these tanks. These modifications were due to the higher seismic input and the use of current methodology for the analysis.

The modifications consist of a complete reinforced concrete encasement of the original steel tanks, the addition of a reinforced concrete foundation ring surrounding the existing foundation, the complete removal of the existing engineered fill from under the tank foundations and replacement with concrete, the installation of prestressed rock anchors around the tank circumference penetrating into bedrock.

With these modifications, which are shown in Figure 3, the actual stresses or required strength for the tank or tanks were less than the allowable stresses or design strengths. Resistence to overturning or sliding were also satisfactory for the Hosgri earthquake.

The conclusion of this testimony is that the design class one outdoor tanks, with the modifications described, are capable of withstanding the postulated magnitude 7.5 Hosgri earthquake.

That concludes my summary.

MR. NORTON: Mrs. Bowers, we would ask that the testimony be placed in the record as though read at this time.

And I would assume we'd take a lunch break now instead of passing for cross.

MRS. BOWERS: Any objection to the material being

mpb12

placed into the record as if read?

MR. KRISTOVICH: No objection.

MRS. BOWERS: Mr. Ketchen?

MR. KETCHEN: No objection.

MRS. BOWERS: Well, Mr. Norton, the testimony you have referred to will be placed into the record as if read, and it will be physically inserted into the transcript.

(The Hosgri Analysis and Evaluation of the Outdoor Water Storage Tanks follows:)

TESTIMONY OF
VINCENT J. GHIO
AND
DILIP JHAVERI
ON BEHALF OF
PACIFIC GAS AND ELECTRIC COMPANY
DECEMBER 4, 1978
DOCKET NOS. 50-275, 50-323

HOSGRI ANALYSIS AND EVALUATION OF THE OUTDOOR WATER STORAGE TANKS

The Design Class 1 outdoor tanks consist of two refueling water storage tanks and two condensate storage tanks (one for each unit) and a firewater and transfer storage tank common to both units (see Figure 1).

The tanks are 40 feet in diameter, average 50 feet in height, and were orignally constructed as steel tanks anchored to a concrete foundation on an engineered fill of varying depth.

The outdoor tanks were analyzed for the Newmark free-field horizontal spectra (normalized to 0.75g) as input which is generally higher than the Blume spectra for all frequencies. No adjustment for foundation size effects were taken as the tanks are relatively small in plan dimension. The vertical spectra were taken as two-thirds the horizontal spectra. Damping was assumed according to Regulatory Guide 1.61, i.e., 7% damping for concrete and 4% damping for steel.

The effect of interaction between the tank and the contained fluid under horizontal excitation was considered in the analysis.

The structure was analyzed for the dead load and hydrostatic load in addition to the earthquake loads. The responses from the three components of earthquakes were combined by the square-root-sum-of-squares procedure in accordance with Regulatory Guide 1.92.

The analysis was made by a computer program which assumes that the structure is axisymmetric. A finite element model for the refueling water storage tank is shown in Figure 2.

In each of the tanks, there is a vault opening at the base on the east side. To determine the effects of such an opening, one of the tanks - the refueling water storage tank - was also analyzed using a 3-dimensional model without using the assumption of axisymmetry. The earthquake effects were computed using equivalent static loads based on the dynamic response accelerations computed from the axisymmetric model. As expected, the stresses around and near the opening were different from those given by the axisymmetric analysis. The stresses were checked for the more conservative of the two analyses and modifications made as necessary to meet the acceptance criteria.

The tanks were originally designed as steel tanks capable of withstanding the Double Design Earthquake loading.

The hydrodynamic pressure exerted by the fluid on the tank, due to horizontal earthquake motion, was calculated by a method generally accepted at the time. This method assumes that the tank is rigid. In the Hosgri analysis a currently accepted methodology was utilized.

Because of the increase in calculated seismic loads, due to the higher seismic input and the use of current methodology major modifications have been specified for the tanks. These modifications consist of the following:

1. Complete reinforced concrete encasement of the original steel shell varying in thickness from 36 inches at the base to 12 inches at the midheight to 8 inches for the upper part including the top dome.

2. Addition of a 2 foot wide by 4-1/2 foot deep reinforced concrete foundation ring.

3. Complete removal of existing engineered fill from under the tank foundations and replacement with concrete.

4. Installation of 46 prestressed rock anchors around the tank circumference penetrating into bedrock.

With these modifications, shown in Figure 3, the maximum stresses are shown together with allowable stresses in Tables 1 through 4 for the steel plate elements of each tank. Table 5 presents required strength versus design strength comparisons for the concrete elements of the refueling water storage tank. Similar results were determined for the concrete elements of the other tanks. In all cases

the actual stresses or required strengths were less than the allowable stresses or design strengths.

Resistance to overturning and sliding were also determined to be satisfactory for the Hosgri earthquake.

Thus we conclude that the Design Class I Outdoor Tanks, with the modifications described, are capable of withstanding the postulated Hosgri earthquake.

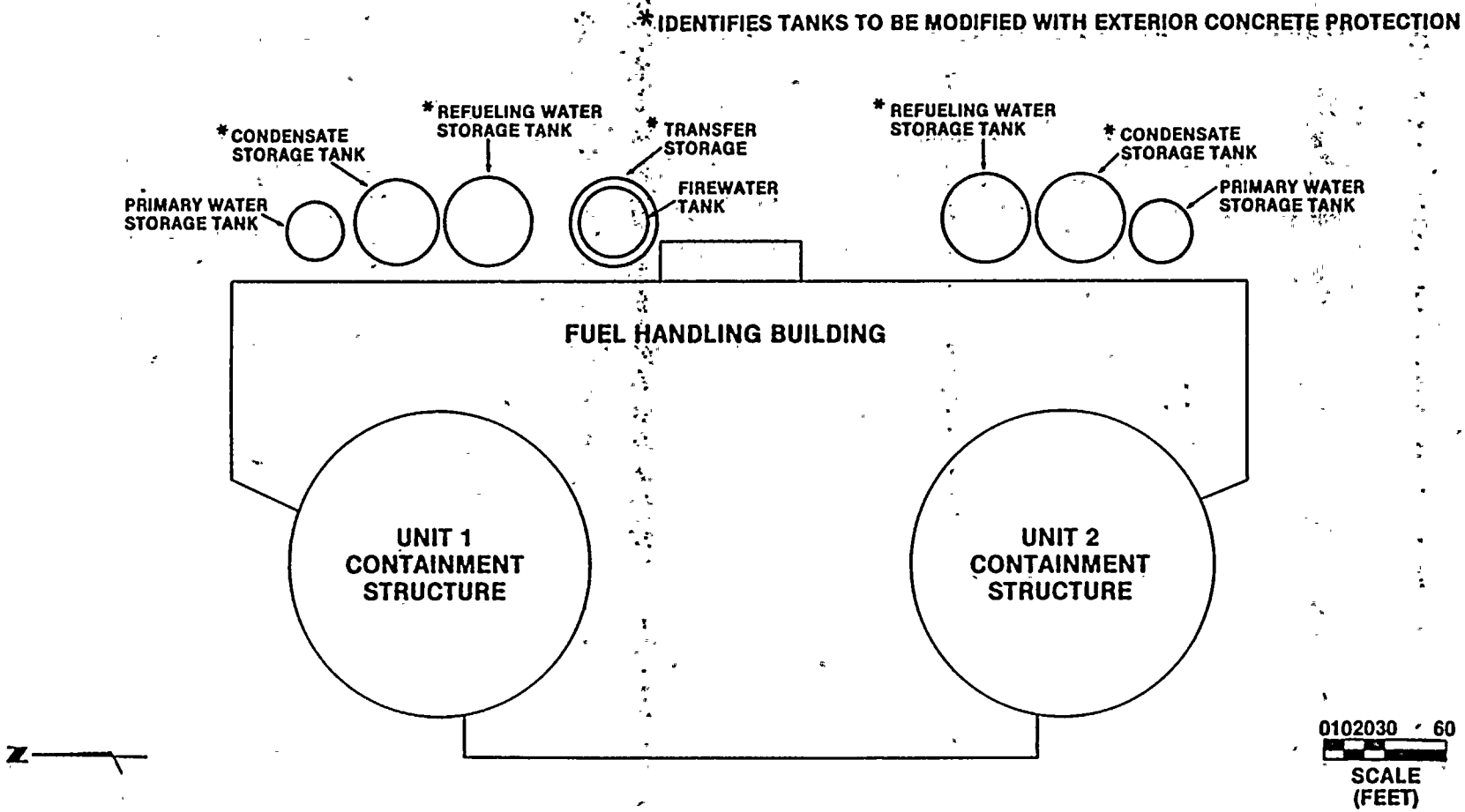

DIABLO CANYON UNITS 1 & 2
OUTDOOR WATER STORAGE TANKS

FIGURE 1

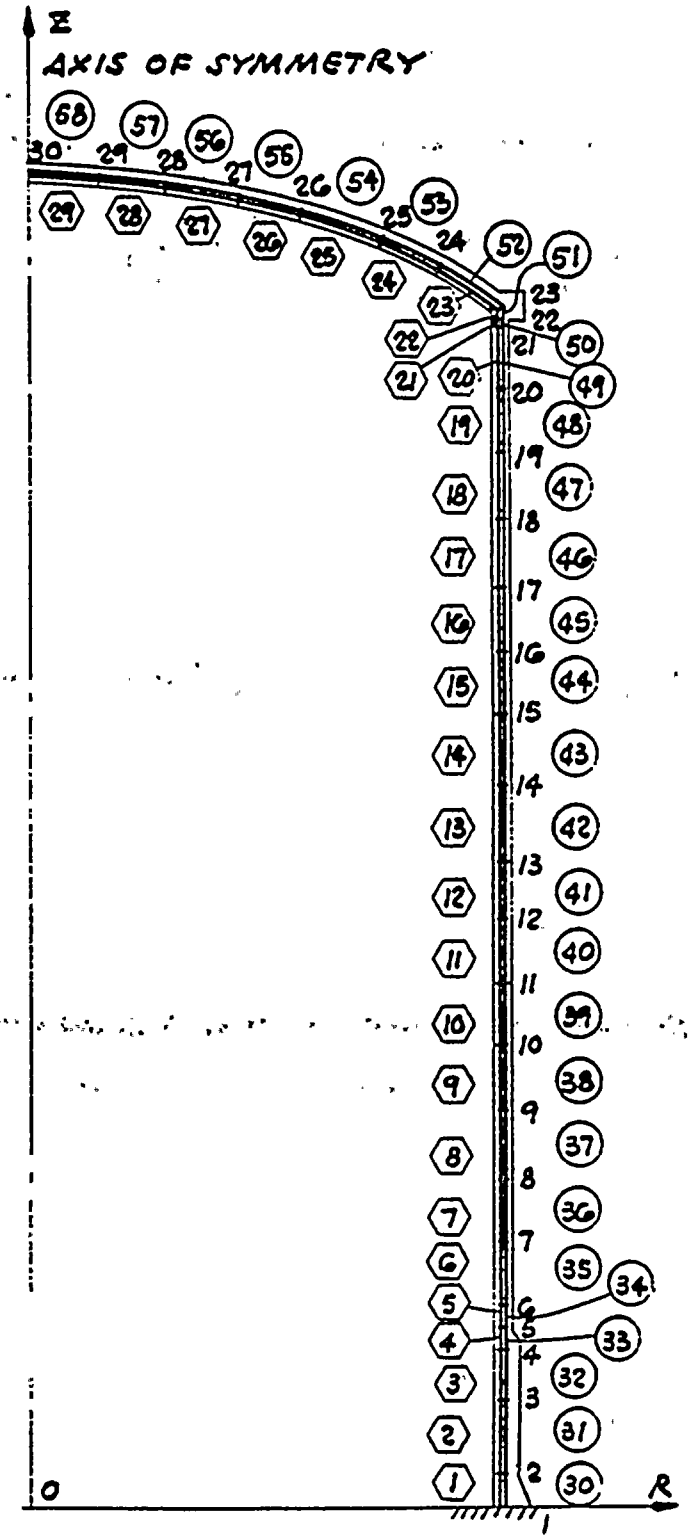

LEGEND

N NODAL POINT

(N) CONCRETE SHELL ELEMENT

⟨N⟩ STEEL SHELL ELEMENT

DIABLO CANYON UNITS 1 & 2

REFUELING WATER STORAGE TANK

AXISYMMETRIC FINITE ELEMENT MODEL

FIGURE 2

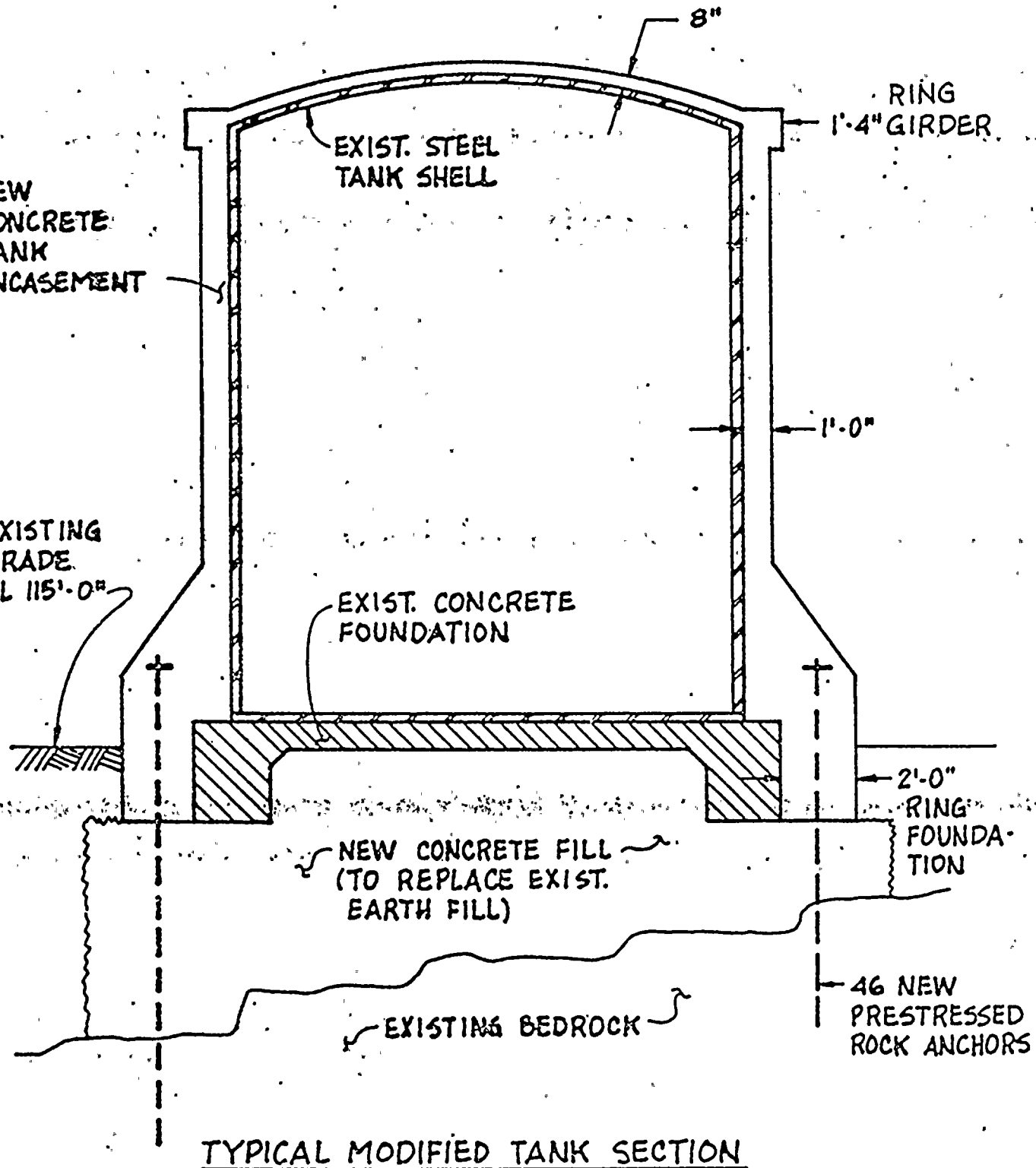

TYPICAL MODIFIED TANK SECTION

DIABLO CANYON UNITS 1 & 2
OUTDOOR STORAGE TANKS
FIGURE 3

TABLE 1
DIABLO CANYON UNITS 1 AND 2
REFUELING WATER STORAGE TANK:
MAXIMUM STRESS INTENSITIES IN STEEL ELEMENTS
(AXIDYN ANALYSIS, AXISYMMETRIC MODEL)

NODAL POINTS	PLATE THICKNESS, INCHES	MAXIMUM STRESS INTENSITY, KSI		ALLOWABLE STRESS INTENSITY, KSI	
		DL + HS	DL + HS + HE + VE	DL + HS	DL + HS + HE + VE
1 - 6	0.578	3.58	18.40*	16.7	25.05
6 - 9	0.490	4.52	19.63*	16.7	25.05
9 - 12	0.356	4.59	13.33	16.7	25.05
12 - 15	0.275	3.64	17.25	16.7	25.05
15 - 30	0.250	2.17	12.12	16.7	25.05

NOTE: DL - DEAD LOAD HE - HORIZONTAL EARTHQUAKE COMPONENT

HS - HYDROSTATIC PRESSURE VE - VERTICAL EARTHQUAKE COMPONENT

* ON THE BASIS OF ANALYSIS OF A NON-AXISYMMETRIC MODEL OF THE REFUELING TANK USING THE SAP IV COMPUTER PROGRAM, THE PLATE WILL BE REINFORCED TO REDUCE STRESSES TO BE WITHIN ALLOWABLE STRESS INTENSITY (SEE TABLE 5).

TABLE 2
DIABLO CANYON UNITS 1 AND 2
FIREWATER TANK:
MAXIMUM STRESS INTENSITIES IN STEEL ELEMENTS
(AXIDYN ANALYSIS, AXISYMMETRIC MODEL)

NODAL POINTS	PLATE THICKNESS, INCHES	MAXIMUM STRESS INTENSITY, KSI		ALLOWABLE STRESS INTENSITY, KSI	
		DL + HS	DL + HS + HE + VE	DL + HS	DL + HS + HE + VE
46 - 43	0.813	8.20	21.38	18.3	27.45
43 - 40	0.688	5.59	20.87	18.3	27.45
40 - 37	0.625	5.20	19.77	18.3	27.45
37 - 34	0.531	4.59	18.48	18.3	27.45
34 - 28	0.438	3.89	17.04	18.3	27.45
28 - 22	0.375	3.17	24.93	18.3	27.45

NOTE: DL - DEAD LOAD HE - HORIZONTAL EARTHQUAKE COMPONENT
HS - HYDROSTATIC PRESSURE VD - VERTICAL EARTHQUAKE COMPONENT

TABLE 3
DIABLO CANYON UNITS 1 AND 2
TRANSFER TANK:
MAXIMUM STRESS INTENSITIES IN STEEL ELEMENTS
(AXIDYN ANALYSIS, AXISYMMETRIC MODEL)

NODAL POINTS	PLATE THICKNESS, INCHES	MAXIMUM STRESS INTENSITY, KSI		ALLOWABLE STRESS INTENSITY, KSI	
		DL + HS	DL + HS + HE + VE	DL + HS	DL + HS + HE + VE
1 - 6	0.627	3.63	15.36*	18.3	27.45
6 - 9	0.522	3.55	16.06*	18.3	27.45
9 - 12	0.417	3.39	14.46	18.3	27.45
12 - 15	0.313	2.70	11.92	18.3	27.45
15 - 33	0.250	1.60	9.39	18.3	27.45

NOTE: DL - DEAD LOAD HE - HORIZONTAL EARTHQUAKE COMPONENT

HS - HYDROSTATIC PRESSURE VE - VERTICAL EARTHQUAKE COMPONENT

* ON THE BASIS OF ANALYSIS OF A NON-AXISYMMETRIC MODEL OF THE REFUELING TANK USING THE SAP IV COMPUTER PROGRAM, THE PLATE WILL BE REINFORCED TO REDUCE STRESSES TO BE WITHIN ALLOWABLE STRESS INTENSITY (SEE TABLE 5).

TABLE 4
DIABLO CANYON UNITS 1 AND 2
CONDENSATE TANK:
MAXIMUM STRESS INTENSITIES IN STEEL ELEMENTS
(AXIDYN ANALYSIS, AXISYMMETRIC MODEL)

PLATE THICKNESS, INCHES	MAXIMUM STRESS INTENSITY, KSI		ALLOWABLE STRESS INTENSITY, KSI	
	DL + HS	DL + HS + HE + VE	DL + HS	DL + HS + HE + VE
0.600	3.84	18.13*	18.3	27.45
0.500	5.07	20.80*	18.3	27.45
0.398	4.87	18.83	18.3	27.45
0.297	4.26	17.29	18.3	27.45
0.250	2.89	13.24	18.3	27.45

NOTE: DL - DEAD LOAD HE - HORIZONTAL EARTHQUAKE COMPONENT

HS - HYDROSTATIC PRESSURE VE - VERTICAL EARTHQUAKE COMPONENT

* ON THE BASIS OF ANALYSIS OF A NON-AXISYMMETRIC MODEL OF THE REFUELING TANK USING THE SAP IV COMPUTER PROGRAM, THE PLATE WILL BE REINFORCED TO REDUCE STRESSES TO BE WITHIN ALLOWABLE STRESS INTENSITY (SEE TABLE 5).

TABLE 5
DIABLO CANYON UNITS 1 AND 2
REFUELING WATER STORAGE TANK:
MAXIMUM STRESS INTENSITIES IN STEEL ELEMENTS
(SAP IV ANALYSIS, NON-AXISYMMETRIC MODEL)

ELEMENT NUMBER	PLATE THICKNESS, INCHES	MAXIMUM STRESS INTENSITY, KSI		ALLOWABLE STRESS INTENSITY, KSI	
		DL + HS	DL + HS + HE + VE	DL + HS	DL + HS + HE + VE
49	0.578	11.12	23.86*	16.7	25.05
65	0.490	12.22	26.56*	16.7	25.05
156	0.356	2.59	10.50	16.7	25.05
196	0.275	2.82	11.90	16.7	25.05
231	0.250	2.05	8.62	16.7	25.05

NOTE: DL - DEAD LOAD HE - HORIZONTAL EARTHQUAKE COMPONENT

HS - HYDROSTATIC PRESSURE VE - VERTICAL EARTHQUAKE COMPONENT

* THE PLATE WILL BE REINFORCED TO REDUCE STRESSES TO BE WITHIN ALLOWABLE STRESS INTENSITY.

TABLE 6
DIABLO CANYON UNITS 1 and 2
REFUELING WATER STORAGE TANK:
STRENGTH COMPARISON OF CONCRETE ELEMENTS
(SAP IV ANALYSIS, NON-AXISYMMETRIC MODEL)

ELEMENT NUMBER	MOMENT, KIP-FT/FT				FORCE, KIP/FT				SHEAR, KIP/FT		
	LONGITUDINAL		CIRCUMFERENTIAL		LONGITUDINAL		CIRCUMFERENTIAL				
	REQUIRED STRENGTH	DESIGN STRENGTH	REQUIRED STRENGTH	DESIGN STRENGTH	REQUIRED STRENGTH	DESIGN STRENGTH	REQUIRED STRENGTH	DESIGN STRENGTH	REQUIRED STRENGTH	DESIGN STRENGTH	
534	0.97	19.72	0.80	19.72	35.78	238.57	56.01	238.57	50.22	~~92.18~~	57.6
463	0.86	97.30	1.15	35.56	68.30	492.24	72.42	329.96	60.88	~~156.41~~	77.4
386	0.76	71.78	3.84	35.56	102.10	400.96	41.79	329.96	65.16	~~156.41~~	77.4
375	4.08	71.78	20.21	35.56	107.15	400.96	25.23	329.96	60.46	~~156.41~~	77.4

NOTE: CALCULATIONS BASED ON 1-FT-WIDTH BEAM.

mpbl

MRS. BOWERS: And we'll take the luncheon break now.

(Whereupon, at 12:05 p.m., the hearing in the above-entitled matter was recessed, to reconvene at 1:00 p.m., this same day.)

1F

WRB/wbl

AFTERNOON SESSION

(1:00 p.m.)

MRS. BOWERS: Are we ready to begin?

Whereupon,

DILIP P. JHAVERI

VINCENT J. GHIO

JOHN A. BLUME

OSCAR A. ROCHA

RALPH T. YOKOYAMA

resumed the stand as witnesses for and on behalf of the Applicant and, having been previously duly sworn, were examined and testified further as follows:

C8

MR. NORTON: We're ready to pass the panel for cross.

MRS. BOWERS: Mr. Kristovich?

xxxxxxx

CROSS-EXAMINATION

BY MR. KRISTOVICH:

Q Mr. Ghio, were the outdoor water storage tanks originally designed as Category 2 structures?

A (Witness Ghio) No, they were not. They were design Category 1.

Q Turning to page 3 of your written testimony, at line 8 you state that "Major modifications have been specified." Have these modifications been accomplished?

A The modifications are in progress.

WRR/wb2

Q You have a list of four modifications on that page. Are each of these still in progress?

A Let's see: I think I'll ask Oscar Rocha to answer that question.

A (Witness Rocha) Quite a bit of the prescribed modifications are under way. Basically what has been accomplished at this time is replacing the earth fill that was under those tanks with new concrete. That's completed. There are several stages of these. Like we have partial reinforcement in place, other preparations have been performed. But the work is under way.

Q Okay.

Can you explain how Modification No. 3, the removal of the existing fill from under the tank foundations was accomplished?

A Yes. We drilled piers around the perimeter of the existing tank, little holes in the ground, and we poured those holes with concrete, reinforced concrete. Then those piers served as shoring while the excavation was performed by hand.

Q So the fill was removed by hand?

A The fill was removed by hand.

Q Directing your attention to page 2, line 10 and line 17, could you describe an axisymmetric analysis?

A (Witness Ghio) I'll have Dr. Jhaveri respond to

WRB/wb3

that question.

A (Witness Jhaveri) The axisymmetric analysis refers to the symmetry of the structure about a vertical axis. The assumption is made that the structure is symmetric about a vertical axis. An analysis made based on that assumption is called an axisymmetric analysis.

Q Okay.

Could you describe a non-axisymmetric analysis?

A An analysis that does not assume that the structure is axisymmetric about the vertical axis is a non-axisymmetric analysis.

Q Did you do both types of analysis?

A Yes.

Q And why did you do both?

A Well basically this tank is -- The tanks are axisymmetric, but in some, maybe all of the tanks, there is an opening at one point which is significant, and we wanted to check the effect of that opening, which is a non-axisymmetric feature of the tank.

Q Which method gave more limiting stress values?

A I'm not sure of all the details, but around the opening -- near the opening I would assume that the non-axisymmetric analysis would be the governing one.

Q Directing your attention to page 1, Mr. Ghio, at lines 22 to 24 you discuss damping. But before you did

WRB/wb4

1 the damping analysis the peak instrumental acceleration of
2 1.15g was reduced to effective acceleration of .75g, correct?
3 A (Witness Ghio) That's correct.
4 Q And was there a tau factor considered?
5 A No. Earlier on in that paragraph the testimony
6 indicates tht no tau reduction was used for these tanks.
7 Q What is your justification for 7 percent damping
8 for concrete, for the tanks, the outdoor water storage tanks?
9 A It stems from simply applying the prescription
10 of Regulatory Guide 1.61.
11 Q Dr. Blume, does Regulatory Guide 1.61 apply to
12 tanks?
13 A (Witness Blume) 1.61 refer to materials, steel
14 and concrete, and certainly it would apply to the concrete
15 in these tanks. The justification for the 7 percent is not
16 only in the Guide but it was covered by me in direct testi-
17 mony, in Reports 9 and 49C, I believe.
18 Q Well, Dr. Blume, is it your understanding that
19 Reg. Guide 1.61 applies to metal tanks?
20 A I see no reason why it shouldn't. It applies to
21 anything under extreme earthquake conditions, which these
22 tanks certainly are for this earthquake criterion.
23 Q Could you describe how damping would occur in a
24 steel tank such as these?
25 A Yes. The walls that are added to the outside of

WRB/wb5

the steel walls -- I think Figure No. 3 that has been distributed today, the revised figure, shows that there is essentially a concrete tank being built around and in conjunction with an existing steel tank, so due to the rigidity of these concrete walls they're going to act like shear walls in the event of a severe earthquake, so they're going to act like shear walls just like the exterior walls of the containment structure or any other structure.

Q Is this reinforced concrete?

A Yes. It's also tied to the steel tank with dowels or lugs.

Q How would the steel of the steel tanking experience damping?

A How would it experience damping? Due to the stress in the material. The steel and the concrete will share the shear and the other forces in accordance with their relative rigidities. So to the extent that they participate they will feel strain and therefore they will experience damping.

Q Mr. Ghio, what is the justification for using 4 percent damping for the steel, with regard to the tank?

A (Witness Ghio) I believe Regulatory Guide 1.61 prescribes damping of 4 percent for welded steel structures. The original tank is a welded steel structure, now encased in a reinforced concrete structure.

wrb/agbl
flws WRB/wb5

Q Mr. Ghio, directing your attention to Page Two, Lines Two and Three, did you look at the effective interreaction between the tank and the contained fluid under vertical excitation?

A I'll ask Dr. Jhaveri to answer that question.

A (Witness Jhaveri) No.

Q And why is that?

A We believed that, given the soil conditions, there will not be significant interaction in the vertical direction.

8.135

Q I'd like to refer you to Page 11-5 of the Hosgri Report, Volume Three.

MR. NORTON: Are you sure it's Volume Three?

Dr. Jhaveri doesn't have that with him. Could you read what you're referring him to, please.

BY MR. KRISTOVICH:

Q I'll read the two relevant paragraphs on 11-5 in Volume Three.

"It was found that the fundamental mode of the empty refueling water storage tank in the vertical direction is 0.033 second. Thus, it was assumed initially that the tank and the fluid act as a rigid mass during vertical motion."

"So effects of vertical earthquakewere obtained by scaling the stresses caused by gravity

wrb/agb2

load and hydrostatic pressure by 0.5 (2/3rds of the maximum ground acceleration, that is, 2/3rds times 0.75g equals 0.50g). This assumption was used in the axisymmetric phase of this investigation.

"At the present time, there is no accepted procedure to analyze the fluid motion in a tank due to a vertical earthquake. To consider the possibility that the fluid may not act as a rigid mass during vertical motion, an amplification factor of 2.0, that is, the acceleration at zero period of 0.5g is amplified to a value of 1.0g, was used in the non-axisymmetric phase of this investigation. Effects of vertical earthquake were then obtained by scaling the sum of the dead load and the hydrostatic pressure stresses by 1.0."

Does that mean that the effects of a vertical earthquake were analyzed?

A (Witness Jhaveri) Those paragraphs describe the way we considered the effect in the vertical direction, amplification in the vertical direction.

Q I thought I understood you to say that you did not look at the effect of interaction between the tank and the contained fluid under vertical excitation.

A I'm sorry, I understood your question to mean

wrb/agb3

flws

endlF

interaction, soil-structure interaction. I stand corrected.

C9

Q So then you did look at the interaction between the tank and the containment for the vertical excitation?

A In the approximate manner described in that paragraph.

Q What was the basis of this analysis?

A Judgment. Literature search.

A (Witness Blume) The dynamic amplification factor of 2 is quite a generous value for such a situation, using liquid. I think it was a conservative assumption based upon judgment which, in turn, is based upon the study of a great many -- I'd say literally hundreds -- of response spectra, and getting average dynamic amplification factors.

Q Is there an NRC Regulatory Guide for this?

A I don't think so. Not to my knowledge.

Q Is this in the Standard Review Plan?

A I don't know, personally.

C9

Q Mr. Ghio, directing your attention to page 3, lines 4 and 5, you state:

"In the Hosgri analysis the currently accepted methodology was utilized."

What currently accepted methodology were you referring to?

A (Witness Ghio) I'll have Dr. Jhaveri respond to that.

A (Witness Jhaveri) It's described in a reference

in that Hosgri report you cited, reference number 7, I think.

Q I'm sorry, I didn't hear. Reference number --

A Reference number 7. Valetsos and Yang are the authors.

Q Well, reference number 7 . . .okay, I believe you're referring to reference number 6.

A Okay.

A (Witness Blume) We don't have a copy.

Q Right, that's Valetsos and Yang.

A (Witness Jhaveri) Okay.

Q Still on page 3, lines 7 and 8, you state that the use of current methodology led to major modifications, as well as a higher seismic input.

Does that mean that the earlier methodology would not have required major modifications?

A Earlier methodology?

Q Yes.

A I'm not sure. I don't recall.

Q Well, could you explain the difference between the current methodology and the earlier methodology?

A Yes. In the computation of impulsive pressures exerted by the fluid on the tank, the earlier methodology used the assumption that the tank would move as a rigid body, laterally.

The current methodology does not make that

assumption. It assumes a deformed shape for the tank and computes the pressures based on that deformed shape.

Q And why does it not make that assumption?

A What was that again?

Q Why does it not make the assumption that it will move as a rigid body?

A It was found that that assumption is not valid, the assumption of rigidity is not valid.

Q Referring to page 3, line 23 through page 4, line 2, how were the allowable stresses for reinforced concrete structural members determined?

A I'd ask Mr. Yokoyama to respond to that.

A (Witness Yokoyama) The same as the other structures we've been using, in this particular case ACI.

Q And for structural steel?

A For structural steel we used ASME pressure vessel code.

Q Were average actual strengths used?

A Yes.

Q For both concrete and steel?

A Concrete is new. That has -- we had used the specified minimum strength.

Q And what is that?

A 4000 psi for the 12-inch thick portion. I guess it's the entire portion. Everything but the concrete fill

I think is 4000. Yes, 4000 minimum specified.

Steel minimum specified is 60 KSI.

A (Witness Rocha) The concrete fill is 3000, only for that portion.

A (Witness Blume) I think to avoid confusion here, it has to be noted that they are talking now about new materials, new concrete and new reinforcing steel, for which they used the specified values and usual reductions, as contrasted to what we've been talking about all morning as existing materials.

Q In the ASME code where does it explain how actual minimums are used, actual material values?

A (Witness Yokoyama) We used what the ASME standard calls design stress intensity, and instead of using -- I think Dr. Jhaveri can back me up -- I think we used, instead of 1.2 we used 1.5. I think that was in the report, the Hosgri report.

A (Witness Jhaveri) I think the question, as I understood it, was where does the ASME code specify using actual material strength.

A (Witness Yokoyama) Oh, I'm sorry. Was that the question?

Q That's correct.

A (Witness Yokoyama) I do not know.

Q Does any member of the panel know?

MR. NORTON: Excuse me. I'm going to have to object and ask now, is this question going to the question of specifications for concrete not poured, or does this question go to concrete that has been poured in a structure that exists?

MR. KRISTOVICH: We're talking about steel.

MR. NORTON: Or steel. Is this talking about steel as it exists, or steel that's to be specified?

MR. KRISTOVICH: I'm talking about the steel the panel members were talking about.

MR. NORTON: Well, I'm not clear what you're referring to.

Are you referring to the tank itself that's already there? Is that what you're talking about?

MR. KRISTOVICH: Yes.

MR. NORTON: All right.

MRS. BOWERS: Do you withdraw your objection?

MR. NORTON: Well, I think the question ought to be rephrased in order that the panel knows what the question is. It ought to be rephrased to include what he's talking about, the specific item he's talking about, as opposed to the question as it was originally phrased, which could apply to anything.

BY MR. KRISTOVICH:

Q Were actual material values used in the ASME . . .

1 evaluation of the steel tank?

2 A (Witness Yokoyama) The average values, test values

3 have been used as in all other existing structures, as far

4 as I know.

5 Q Is there anywhere in the ASME code that describes

6 how to use actual material values?

7 A I'm not that familiar with it.

8 A (Witness Blume) I think the situation is just

9 like we were talking about this morning with these other

10 codes, that they do not contemplate redoing or adding to

11 structures. Here we are wrapping a new concrete tank

12 around an existing steel tank. This would certainly not be

13 contemplated in the ASME code.

14 So I think the situation is, again, this basic

15 one that we know what the steel is by tests, and there would

16 be no valid reason in the world to use a value that is much

17 lower just because it's in the specification.

18 A (Witness Rocha) I want to emphasize the use of

19 the ASME code allowable stresses at the design of the original

20 tanks. It was chosen because it has lower allowables than

21 say American Waterworks Association, which is the code

22 normally used for water tanks. But being this is a nuclear

23 site we decided we'd choose the lower allowable values in

24 the design of the original tank.

25 Now, the structure has been modified in order to

check the effects on that assisting metal there, and we are using the actual test values to verify that those values are not exceeded.

Q You previously mentioned a factor of 1.2 and a factor of 1.5. What exactly were you referring to?

A (Witness Yokoyama) In the ASME pressure vessel code for what they consider code earthquake forces or wind forces. They use a factor of 1.2 times the design intensity, and instead of the 1.2 we have used 1.5 for the 7.5 Hosgri earthquake. Is that correct?

A (Witness Jhaveri) Yes. We have used a design stress intensity of 1.5. 1.5 times the --

A (Witness Yokoyama) -- design intensity specified in the ASME pressure vessel code.

The design intensities are in that code for various stainless steel materials, whatever, with the various yield stresses. And those are the ones that we used -- I think I recollect that there was one that had a minimum yield strength of 35 KSI, and it gave you some value. And for the 25 KSI yield strength they gave you another value.

And those are the values we used. If our in-place steel was 35 KSI, that's the number we used.

Q Well, why don't you use 1.5 rather than 1.2?

A Because of the great magnitude of this earthquake. The earthquake they have in the ASME pressure vessel code is

for the building design code type of earthquake.

Q Directing your attention to Tables 1, 3 and 4 --

MR. NORTON: Can we direct our attention to just one at a time?

MR. KRISTOVICH: Yes.

BY MR. KRISTOVICH:

Q For each of these tables -- you can take the time to look at them -- each of the tables has a footnote at the bottom which says:

"See Table 5."

MR. NORTON: Those should all read now, I take it, "See Table 6."

WITNESS JHAVERI: No, it is Table 5 it is referring to.

MR. NORTON: Oh, it is the new Table 5 that it's referring to? All right.

BY MR. KRISTOVICH:

Q On Table 1, the footnote following the asterisk states:

"On the basis of analysis of a non-axisymmetric model of the refueling tank using the SAP-4 computer program, the plate will be reinforced to reduce stresses to be within allowable stress intensities."

And then it says: "See Table 5."

Could one of the panel members explain why we

are seeing Table 5, or how Table 5 ties in with this?

A (Witness Yokoyama) Do you want me to answer that? On Table 5 you'll notice that there's an asterisk -- I don't have the Table here. . .

(Document handed to the witness.)

In the non-axisymmetric model you'll notice that there is one --

Q Are we on Table 5 now?

A Yes. There is one that asterisked, 26.56. That's the fourth column from the left. That is higher than the allowable.

Q Wait, there were two numbers that have asterisks, right?

A Yes. Well, one of them is above the allowable stress, and the other is still within allowable. However, in the field you just wouldn't reinforce that little portion there, you would -- it would be impractical just to reinforce that one little area. So if the area we're talking about here is the opening, concrete opening around the tank, in the tank shell. So if we're going to fix something, we're not just going to fix that one little area. We decide to fix everything in the area within the opening in the concrete shell. The steel within the opening of this concrete shell has been reinforced.

Q So these are the numbers before the modification?

A That's right. That number is before the modification.

Q Do you know what the numbers after the modification will be?

A They're much less.

Q How much less?

A I'd have to look that up. I don't have the calculations here.

What we're talking about right now, what is that, 1.56 over 26, and anything we do is going to be within allowable, practically. Anything practicable we do will be within allowable.

Q Well, what value is this table in analyzing the modified tank?

A It pinpoints the part that we would have to reinforce, to be within the acceptable criteria.

A (Witness Rocha) I want to emphasize that even though the use of the values there are slightly higher than the allowable, they do not exceed the yield stress of that metal. We have chosen to modify the area to bring those areas within allowable, as specified by the ASME code.

Q Mr. Ghio, did you do an OBE analysis of the reactor water storage tanks?

A (Witness Ghio) Yes. An OBE analysis was performed.

Q And where was the OBE analysis limiting?

A I don't believe it was limiting anywhere in the original tanks.

Q Was a vertical dynamic analysis made for the OBS?

A I'll ask Mr. Rocha to answer that.

A (Witness Rocha) We took just two-thirds of the horizontal response, and used that as a vertical response.

Q Two-thirds of .2 g?

A That's correct.

Q Any why did you do that?

A Eight years ago when this was designed, that was the accepted methodology.

Q Would it be acceptable today?

A I believe so.

Q Why?

A Well, it's a sound methodology. More new methods are being found to analyze tanks that are more sophisticated, and these methods have been put into practice as they are developed.

Q For the SSE did you use a constant vertical?

A I believe so, yes.

Q Okay.

Turning to Table 6, in the last column under Shear KIP/foot, then under that the last column is Design Strength you made some corrections to the figures there.

What is the basis for those corrections?

1 A (Witness Jhaveri) According to the code the design
2 strength for shear is governed by a formula that was described
3 by Mr. Lang earlier.
4 The initial figures were based on that, but there
5 is also a limiting value to that expression, and that is
6 10 square root of F sub C prime, and we hadn't checked against
7 that. The new values are 10 square root of F sub C prime.
8 Q And when did you discover that you hadn't done
9 that?
10 A I'll ask Mr. Yokoyama to --
11 A (Witness Yokoyama) When Dr. Jhaveri turned his in,
12 he had the wrong sheet. That was about two months ago.
13 MR. NORTON: I'm sorry, I didn't understand that
14 answer. Would you repeat it, please? Or rapharase it? I
15 didn't follow it.
16 MR. KRISTOVICH: The question was: When did you
17 discover that you had the wrong figures?
18 WITNESS YOKOYAMA: And the answer was that Dr.
19 Jhaveri had the wrong table, and we did have those numbers
20 changed early in November.
21 MR. NORTON: Yes, but I don't know that that's an
22 answer to the question.
23 I'm not clear.
24 BY MR. KRISTOVICH:
25 Q Well, when did you discover that you had not

1 looked at the most limiting condition?

2 MR. NORTON: Object. That assumes a fact not in

3 evidence.

4 MRS. BOWERS: Do you want to respond to the

5 objection?

6 MR. KRISTOVICH: Well, I thought Dr. Jhaveri

7 testified that they had done an original calculation, and

8 then later did a new calculation to arrive at the second

9 figures, which we added to the sheets today.

10 And I'm asking, when did they do the second

11 calculations?

12 MR. NORTON: I have no objection to that question.

13 WITNESS BLUME: Let me see if I --

14 MR. NORTON: Excuse me, Dr. Blume, I think we have

15 to get a ruling from the Board.

16 WITNESS BLUME: Oh, pardon me.

17 MRS. BOWERS: I think the question was rephrased

18 and you had no objection to the rephrased question.

19 MR. NORTON: That's correct.

20 MRS. BOWERS: So the witnesses can proceed on the

21 rephrased question.

22 WITNESS BLUME: I'll try to clarify it, as I

23 understand the question and the situation.

24 Apparently in November it was discovered that

25 one of the limiting criteria had not been taken into account.

wel 14

It was not a calculation as such for stresses. It was a matter of determining all of the limiting criteria.

Apparently this was corrected in November, but due to some accident with the tons of paper we've been handling, I guess Dr. Jhaveri didn't pick up the right piece of paper when this document was turned in.

So these corrections that were just made were discovered by him fairly recently, but they actually were corrected two or more months ago.

Does that help any?

Madelon fls

MADELON flws wel4 c10 mpbl

MR. NORTON: Well, I think the problem is the testimony of November 15th, and I gather what you're saying is the error was discovered before then, but another error was made and the wrong table was submitted.

Does that sum it up?

WITNESS JHAVERI: That's correct.

WITNESS ROCHA: I would like to correct my previous testimony on the accelerations that you asked me.

50 percent amplification due to the design earthquake and the double design earthquake would take into consideration that those things were sitting in their own field as built.

BY MR. KRISTOVICH:

Q Is that for the SSE analysis or for the OBE analysis?

A (Witness Rocha) Both.

MR. KRISTOVICH: No further questions.

MRS. BOWERS: Mr. Ketchen?

MR. KETCHEN: Mrs. Bowers, I know it's early, but may we have about five or ten minutes to discuss -- I'd like to discuss something with my advisors before I take up cross-examination.

MRS. BOWERS: Well, let's take ten minutes.

After this we're going to leave for lunch at

mpb2

quarter to twelve to try to get ahead of the crowd.

(Laughter.)

(Recess.)

MRS. BOWERS: Do you want to discuss something before we begin?

MR. NORTON: Yes.

I just found out -- I guess the Board received its packet at the same time the rest of us did in the mail, which is the Joint Intervenors' Request for Directed Certification, which is approximately -- well, I haven't read it all, but it looks to be about 20-some pages, 20, 21, 22 pages in length with attachments.

We just found out that we have been directed to respond by the 15th of December --

(laughter.)

DR. MARTIN: Of which year?

MR. NORTON: -- by the Appeal Board.

DR. MARTIN: Well, that gives you plenty of time.

MR. NORTON: Sure.

(Laughter.)

MR. NORTON: Can I quote you in my response.

And if we're going to have sessions on Saturday and Sunday, today is the 4th, that's 11 days. This weekend is the only weekend we have to work on it. And we don't have the library facilities and so on here that we would have in our

mpb3

offices, so we have a problem in getting out a response.

MRS. BOWERS: Are you serious that somehow you learned December 15th--

MR. NORTON: Did I say December 15th? Excuse me, I meant January 15th.

MRS. BOWERS: Well, that's why Dr. Martin said you had so much time.

DR. MARTIN: You had almost a year.

MR. NORTON: January 15th, I'm sorry, I misspoke. Something happened to December, I missed it. I was someplace, I forget where.

But anyway, we only have 11 days to file a response, and I haven't even read it yet. But clearly it's going to take some time to -- someone told me they read it, and it won't take any time. But I don't know, we're just going to need the time to work on it. There's no way we can do it in the evening, preparing witnesses for examination and preparing for cross.

The Staff has the same problem we do.

MRS. BOWERS: What you're working up to is no Saturday.

MR. NORTON: Well, I don't want to do that, but I don't....

MRS. BOWERS: Well, Mr. Norton, maybe after you have a chance to go through it, like skip dinner and --

mpb4

MR. NORTON: I could stand that whether I go through it or not.

MRS. BOWERS: Well, right now you don't really know.

MR. NORTON: Well, I do know we have to get something in by the 15th. And the only time to work on it is this weekend, obviously. And we've got Dr. Bruno coming and we have to prepare for his cross-examination, and the Staff's witnesses.

MRS. BOWERS: Mr. Hubbard is smiling all over.

MR. NORTON: Well, it's something that we didn't contemplate this morning when we discussed scheduling; that's all. And I don't know what the Staff -- has the Staff any thoughts about it?

MR. KETCHEN: I haven't seen a copy of it yet. I knew it was coming.

I think it just takes some thinking overnight or some contemplation before we can start discussing schedules. I realize tomorrow is Friday and the day after is Saturday, and you're probably talking about what witnesses are going to be where.

If that's what you're asking me, I think it just takes some time with it.

MR. NORTON: Well, the other problem we have is we intend to bring some other people down for cross-examination,

mpb5

like Mr. Hamilton and Jerry Frazier, and we have to notify them when to be here too. And we would just like to fit that in.

So we would just like to get a feel for what's happening. But we can wait until tomorrow to discuss it further, but I did want the Board to be aware that we do now have another deadline.

MRS. BOWERS: Well, and when you say January 15th, is that simply from the filing of this document, or the Appeal Board has done something?

MR. NORTON: The Appeal Board has -- Mr. Gear came up and informed me that he had just gotten word that the Appeal Board had evidently called his office and told us that we had to have a filing by January 15th, and I assume that's the same for the Staff, but maybe the Staff has another five days; I don't know.

MR. KETCHEN: I don't know either. I haven't seen the document. I have no idea what it says.

MRS. BOWERS: Well, if we talk about it first thing tomorrow morning, would that be sufficient time for your witnesses?

MR. NORTON: Yes. It wouldn't even have to be first thing tomorrow morning. Some time tomorrow we should notify our people when to make their arrangements to be here, that's all.

mpb6

MRS. BOWERS: Well, our preference, as you know, is to go ahead with the Saturday hearings with the idea that having some Saturdays might eliminate an additional week, you know.

MR. NORTON: We fully agree with that. But, you know, we do have to respond to this thing, we have no choice.

MRS. BOWERS: Well, we'll get a firm position early tomorrow morning, then.

Mr. Ketchen -- do you have anything else, Mr. Norton?

MR. NORTON: No.

MRS. BOWERS: Mr. Ketchen?

MR. KETCHEN: Mrs. Bowers, I also have a problem.

As you know, the Staff, the NRC Staff sometimes plays -- or wears several hats. You read in our Appeal Board decisions often that the Staff is a party but -- for most purposes, but in some instances it is more of a party than others, if you will.

We sometimes articulate that we play the role of the -- or represent the public interest, which is, as I say, sometimes distinguished by the Appeal Boards as being a little bit different than either the Intervenor or the Applicant. That's preliminary to saying that during the cross-examination by the Intervenors we heard some answers

mpb7

and information that was first of all a little bit confusing in response to the questions. And in addition to that, different from what we have understood the Applicant's position to be -- technical position to be on this particular element of the review.

And as you know, this is a complex business that we're in, and a complex subject that we're talking about within that business.

So what I'm getting up to is that I am in the dilemma of having a problem about this panel and not being ready for cross-examination.

What I wish to say is that it just -- when we have the prepared testimony in five days in advance of the hearing it's not easy in all cases, but you do have something to sit down and prepare for. But when you hear something in a multi-party case brought up for the first time on cross-examination, it leaves you without means sometimes to ask the questions to clear up the confusion unless you have some time to get with your advisors and discuss what the actual testimony was and what a proper question would be to clear it up.

So what I'm asking for is an exception to the usual procedure to allow the Staff some time to prepare its cross-examination of these panels based on the -- cross-examination of information that was put on the record during

mpb8

1 the cross-examination by Mr. Kristovich. And I would ask
2 that that time be until some time tomorrow.
3 I would suggest in the alternative that this
4 panel be excused for that period of time, and that we continue
5 with the rest of the Applicant's direct case in the interim.
6 MRS. BOWERS: Mr. Norton?
7 MR. NORTON: That sounded like testimony.
8 MRS. BOWERS: Are you going to move to strike?
9 MR. NORTON: But I'm not going to move to strike.
10 (Laughter.)
11 MR. NORTON: I just want him to remember that.
12 (Laughter.)
13 MR. NORTON: I don't know quite how to respond.
14 That's somewhat of an unusual request in that he heard some-
15 thing and he needs a day to prepare for cross-examination. I
16 don't know what he heard. He said something about the answers
17 were confusing to the questions, and I'm kind of at a loss of
18 what we're really talking about, so I don't really know how
19 to respond to it. It's a very unusual request.
20 I don't think we have any problem with any of
21 the witnesses being here tomorrow. But this idea of kind of
22 jumping all around is kind of hard to deal with.
23 I just don't know what he's talking about, I
24 guess.
25 MR. KETCHEN: That's my problem. It is unusual,

mpb9

I agree. And I really can't get into the factual details of explaining what my problem is so you can understand it.

But without testifying and getting into the facts, at least as far as the Staff is concerned, the Staff has received information through this cross-examination that is -- at least I'm told -- that is different from what we understood the information to be that we received and evaluated. And more than that, I have to sit down with these technical advisors and find out what that really means because I don't know myself.

And admittedly, it is an unusual request, and I'm asking for the accomodation.

MR. NORTON: It sounds kind of like St. Augustine's definition of fate. So I guess we'll have to withold any objections.

MR. KRISTOVICH: Mrs. Bowers, we have no objection. It sounds like a reasonable way to proceed.

(The Board conferring.)

MRS. BOWERS: Well, the Board recognizes that it is unusual. But since there are really no objections from the other parties, we will plan to proceed.

Now, do you think you will be ready first thing in the morning? Do you want the transcript?

MR. KETCHEN: Yes, ma'am.

MRS. BOWERS: Why don't you spend some money

mpb10

and get an early copy.

MR. KETCHEN: We'll do that.

(Laughter.)

MR. KETCHEN: What I would like to do is leave myself an out, and first thing in the morning is insufficient time. However, I think first thing in the morning I can indicate to you when we will be ready to proceed with the cross-examination of this panel, if that's acceptable.

MRS. BOWERS: Well, I wonder, before this panel is temporarily excused, it might be appropriate for us to check with the Board members and see if they have questions.

MR. NORTON: Well, I don't understand if there's more information that needs to be elicited, why it can't be elicited now.

I guess what the Staff is saying is -- that's what confuses me. I don't understand why they can't elicit the information by question now. I just don't understand that.

MR. KETCHEN: Well, let me hark back. I'm not saying it's more or additional information.

I think in response to the questions we heard answers that have been a surprise to us, and we want to get the transcript and go back through it and make sure that that is the case or isn't the case. It may not be the case. But we want to make sure before we proceed that that information is not new or it's just the context in which we heard it,

mpb11

we didn't hear it correctly, or what.

The answers were confusing to us and we want to be sure before we proceed that our ears weren't playing tricks on us. And that's why we're asking for the accomodation, to be able to get the transcript, look back through it, and then proceed with cross-examination on that basis. And it's not that easy to do on what we've heard orally. We need to see what was actually said in response to the questions.

MR. NORTON: Well, I guess the only thing I'm asking is I don't see why we can't be told what area the problem is, or the potential problem, or the possible problem area. I don't see what the big secret is. That's what's kind of bothering me a little bit.

MR. KRISTOVICH: Well, Mrs. Bowers, that would be getting into the Staff's cross-examination. I don't know if that would be appropriate to discuss.

MR. NORTON: I'm sorry, I didn't hear what Mr. Kristovich just said.

MRS. BOWERS: He thinks you're out of order.

(Laughter.)

MR. NORTON: That's nothing new.

MPB 5

(Laughter.)

J10.240

(The Board conferring.)

MRS. BOWERS: Well, Mr. Ketchen, we've listened carefully to your explanation and your request, and as we said

mpb12

earlier, there was no real objection by other parties. And so we would grant it.

But we're at a loss as to why you can't at least identify, focus in on a subject or subjects so that the Applicant and the Intervenors can also review the transcript. Can't that be done?

MR. KETCHEN: Yes, I can do that for you.

MRS. BOWERS: Fine. Well, that's all Mr. Norton wanted.

MR. NORTON: This way at least one or two of the people would be able to sleep tonight.

(Laughter.)

MRS. BOWERS: The rest will be writing transcript corrections.

(Laughter.)

MR. NORTON: No, just one does that.

MR. KETCHEN: The problem with that is sometimes when you wade in there and open the door, all of the water rushes out.

It's basically in the area of application of the factors in the calculation of the design stress intensity for earthquake loads. We heard a practice described that we understood -- hopefully without testifying -- we understood differently. I didn't say that quite right.

But the practice we have heard described, or the

mpb13

methodology is something different from what we understood it to be, and what was evaluated in the Safety Evaluation Report. And I say that positively; I'm not sure that's the case. But it's a confusion that we have. And we wanted to check back in the transcript and make sure that that was so or not so.

MR. NORTON: I think I understand what he's saying.

Is this the area where the -- I think it was Mr. Yokoyama and Dr. Jhaveri were talking about 1.2 and 1.5. Is it in that general area?

MR. KETCHEN: It's in that general area.

MR. NORTON: Okay.

MR. KETCHEN: And in addition to that, in addition to Mr. Ko and Mr. Knight, other technical people are coming tonight who can help us on this question.

MR. NORTON: Okay. That's all we need to know. Thank you.

MRS. BOWERS: Well, let me go back to an earlier question concerning the fact that this matter is going to be left open.

Do you want the Board to proceed with any questions now?

MR. NORTON: I would request that the Board reserve its cross until after the Staff has completed its

mpb14 1 cross, because they may ask the questions, or you may have
2 some questions that you may want to go into in that specific
3 area, and we would not want to open Mr. Ketchen's doors.
4 MRS. BOWERS: Well, we'll postpone the Staff's
5 cross-examination and any Board questions.
6 Now can you realign the panel here?
7 MR. NORTON: Yes.
8 Our next panel is for Buried Tanks and Piping
9 Systems. It will be a new panel, except Mr. Lee will return.
10 It will be Mr. McLaughlin, Mr. Lawson, Mr. Udaka,
11 and Mr. Lee, all of whom have been previously sworn.
c11 12 (The panel temporarily excused.)
13 Whereupon,
14 JOHN A. MC LAUGHLIN,
15 ROBERT T. LAWSON,
16 TAKEHAZU UDAKA,
17 and
18 MING E. LEE
19 resumed the stand as witnesses on behalf of the Applicant, and,
20 having been previously duly sworn, were examined and testified
21 further as follows:
22 DIRECT EXAMINATION
23 BY MR. NORTON:
24 Q Mr. McLaughlin, do you have any corrections at
25 all to the testimony?

mpb15

A (Witness McLaughlin) Yes, I have one.

MRS. BOWERS: Wait a minute. I haven't located it. It's not in order, and you're skipping --

MR. NORTON: No, it is in order. It follows the Outdoor Tanks.

MRS. BOWERS: Oh, I have it now.

WITNESS MC LAUGHLIN: On page 3, line 18, following 10'6", the word "round" I would like to scratch and substitute "in diameter".

BY MR. NORTON:

Q All right.

Before we have a resume of the testimony, does each and every panel member adopt the testimony as their own?

A (Indications of assent.)

MR. NORTON: Let the record show that they all assented by nodding their heads yes.

And Mr. McLaughlin, would you proceed by summarizing the testimony, please?

WITNESS MC LAUGHLIN: The auxiliary saltwater for piping and the diesel fuel oil pipes, tanks, were analyzed for the Hosgri event. The methodology used, unlike other structures, for the buried pipes was Section 6 of Bechtel Topical Report Analysis of Long Buried Structures.

The buried tanks were analyzed using a finite element analysis. The results of this analysis were that the

mpb16

stresses were all within the specified stresses. Therefore it was unnecessary to review the actual stresses.

That concludes my summary.

MR. NORTON: Mrs. Bowers, I don't think it's necessary to have the professional qualifications of the joint authors, Mr. McLaughlin and Mr. Lawson, inserted into the record as though read as they're already in evidence, although we will be doing that again starting with the next group of panels of the authors.

However, we would at this time ask that the testimony be placed in the record as though read.

MRS. BOWERS: Mr. Kristovich?

MR. KRISTOVICH: No objection.

MRS. BOWERS: Mr. Ketchen?

MR. KETCHEN: No objection.

MRS. BOWERS: Well, the prepared testimony will be placed in the record as though read. It will be physically inserted.

(The Hosgri Analysis and the Evaluation of the Buried Tanks and Piping Systems follows:)

end
MADELON
WRBLOOM
ws
g)

TESTIMONY OF
J. A. McLAUGHLIN
AND
R. T. LAWSON
ON BEHALF OF
PACIFIC GAS AND ELECTRIC COMPANY
DECEMBER 4, 1978
DOCKET NOS. 50-275, 50-323

HOSGRI ANALYSIS AND THE EVALUATION OF THE BURIED TANKS AND PIPING SYSTEMS

My testimony deals with the seismic adequacy of the buried piping of the auxiliary salt water system and the underground fuel oil storage tanks associated with the diesel generators. The auxiliary salt water system is described in Section 9.2 of the FSAR and the diesel generator system is described in Section 8.3 and 9.5.4 of the FSAR. The summary of the results of the seismic adequacy of these elements are in Chapter 12 of the Hosgri Report.

I will discuss first the buried piping of the auxiliary salt water system.

The auxiliary salt-water piping is a buried Design Class I piping system. The buried portion which supplies cooling water from the Intake Structure to the Component Cooling Water Heat Exchangers located in Turbine Generator Building is approximately 1600 feet long. There are two 24-inch diameter steel pipes for each unit. These lines, as well as the buried, Design Class II, reinforced concrete, circulating water intake conduits which provide support for

the auxiliary saltwater piping, have been reviewed for Hosgri earthquake.

The auxiliary saltwater piping was placed in a trench excavated in rock alongside the main cooling water intake conduits. These concrete conduits were poured directly against the sides of the rock trench. Each flange of the piping was embedded in a concrete anchor attached to the conduits. The piping is a ductile steel and is lined with a 1/8 inch polyvinyl chloride lining.

This system of intake conduits and the auxiliary salt water pipe which are integrally confined in a rock trench was analyzed for the Hosgri event. Results of the seismic analysis are described in Chapter 12, Volume III of the Hosgri Report.

Briefly, the method and criteria used in the analysis are based on the approach given in Bechtel Power Corporation's Topical Report, BC-TOP-4A, Section 6, entitled "Analysis of Long, Buried Structures." During an earthquake the buried pipelines are assumed to move with the surrounding soil under the propagation of seismic compressional and shear waves. The stresses in the pipe were computed as the products of soil strains and the modulus of elasticity of the pipe material. Since shear waves generally transmit the greatest proportion of the earthquake's energy, they were used in determining the maximum stress. Seismic input parameters used in the analysis included maximum ground

acceleration and velocity and shear wave velocity. Internal pressure of the system was also computed and combined with stresses induced by Hosgri earthquake to produce the total stress to be resisted by the pipe.

For the Hosgri seismic evaluation, yield stress for the materials of construction was established as the acceptance criteria for stresses due to combined seismic and other loads. The results of the analyses demonstrate that the stresses in the auxiliary salt-water piping and the circulating water intake conduits meet this criteria. Thus the auxiliary salt-water piping will perform its necessary function when subjected to seismic inputs associated with the Hosgri seismic event, meeting the applicable requirements of Appendix A to 10 CFR Part 100. In addition, this system was independently verified as part of a comprehensive design review, by Harding-Lawson Associates.

The diesel fuel oil storage tanks are buried steel tanks, 10' 6" round, 63' long, 3/8" shell with a 9/16" ellipsoidal head. They are designed as a flexible buried system. Seismic loads are conveyed around the tanks by the surrounding soil. The tanks and connected buried piping were analyzed for the Hosgri seismic event using finite element analysis techniques. The results of this analysis showed all stresses and deflections to be within allowable limits.

The diesel fuel oil system is fully described in Sections 8.3 and 9.5.4 of the FSAR. Stress analyses associated with the Hosgri event are presented in Chapter 12 of the Hosgri Report.

wrb/agbl

MR. NORTON: At this time, we pass the panel for cross-examination.

CROSS-EXAMINATION

BY MR. KRISTOVICH:

Q Mr. McLaughlin, were these originally designed as Category 2 structures?

A (Witness McLaughlin) Yes, they were. Class 1 structures, you say?

Q Class 2.

A No, Class 1 structures.

c12

Q Well on Page One of your written testimony, Lines 20.25, you state:

"These lines, as well as the buried design Class 2 reinforced concrete circulating water intake conduits..."

Was part of this originally designed as Class 2?

A The concrete conduits are design Class 2.

Q Did you do an OBE analysis for the buried tanks?

A The OBE analysis for this system was in the form of a design criteria. It's a buried structure. It would be within or better in the elastic range than the rock it is confined by.

Q Directing your attention to Page Two, Lines 15 through 18, you refer to a Bechtel Power Corporation Topical Report. Is this a Topical Report that has been accepted by

wrb/agb2

1 the NRC?

2 A Yes.

3 Q Have you personally reviewed this report?

4 A Chapter Six. Section Six.

5 Q On what basis did you decide that the approach in

6 this report was applicable to Diablo Canyon?

7 A I will let Mr. Lee answer this question.

8 A (Witness Lee) This method was recommended to us

9 by the NRC Staff during an earlier audit on this system.

10 Q When was that?

11 A That was, I believe, some time in 1975.

12 Q So your basis for using this report is the NRC

13 suggestion?

14 A Yes.

15 Q Have you independently verified that the assumptions

16 in this report are correct?

17 A Not this particular report, no.

18 Q Directing your attention to --

19 MR. NORTON: Excuse me, the last question, we have

20 a new panel up here, I'm not sure they understand how panels

21 are to operate. But the one witness said no, but the other

22 witness is indicating yes, that someone did.

23 WITNESS MC LAUGHLIN: Dr. Udaka didn't agree,

24 so he might wish to comment.

25 WITNESS UDAKA: Yes, I personally reviewed these

wrb/agb3

reports and the calculations.

BY MR. KRISTOVICH:

Q And verified that the assumptions underlying the report were applicable to Diablo Canyon?

A (Witness Udaka) Yes.

Q Directing your attention to Page Two, Line 26 through Page Three, Line One, for horizontal and vertical ground acceleration, what were the values that were used?

A (Witness Lee) The horizontal ground acceleration is 0.75g and the vertical ground acceleration is 0.5g.

Q What were the horizontal and vertical ground velocities?

I'm referring to the velocity --

A The maximum horizontal ground velocities, three feet per second, and the maximum vertical ground velocity is two feet per second.

Q Well, for the horizontal velocity of three feet per second, is that 90 centimeters per second, approximately?

A 97 meters?

Q 90 centimeters.

A 90 centimeters. I don't have any ready reference on that.

A (Witness Udaka) Yes.

Q And for the vertical two feet per second, is that 60 centimeters per second?

wrb/agb4

A Right.

Yes, the statement is right.

MRS. BOWERS: I missed the name of the third witness.

MR. NORTON: It's Mr. Lawson.

MRS. BOWERS: Thank you.

BY MR. KRISTOVICH:

Q Well, what was the basis for picking these numbers, 90 centimeters per second and 60 centimeters per second?

A (Witness Lee) This number was supplied to us by URS/Blume Consultants.

Q Are any of you members of URS/Blume?

A (Chorus of no.)

A (Witness Udaka) Can I add another thing?

This is the basis of the time history which we are given. The time history shows -- although maximum acceleration 0.75 --

Q I'm sorry, the time history shows what?

A Maximum acceleration as 0.75 for horizontal direction, but the velocity is lower than three feet per second.

If you integrate once, you can get the velocity. If you integrate twice, you can get displacement. If you compare the maximum value compared to three foot and two foot, there's a displacement. This number is quite a conservative

wrb/agb5

number.

Q This number is referring to the 90 centimeters per second?

A Right.

Q And the 60 centimeters per second?

A Right.

MR. NORTON: Excuse me, Mrs. Bowers.

I hate to interrupt the cross-examination here, but I forgot during the direct to identify that Mr. Lee and Mr. McLaughlin are with Pacific Gas and Electric, and Mr. Lawson and Mr. Udaka are with Harding, Lawson Associates, I believe is the name of the company and our consultants.

BY MR. KRISTOVICH:

Q I'd like to refer to Joint Intervenors' Number 45, which is USGS NUmber 672, and I'd like to refer specifically to Page Three and we'll provide a copy of that to the panel of witnesses.

(Document handed to the witness panel.)

MR. NORTON: Excuse me, if we're going to get into Circular 672, I think we had better call Dr. Blume back up here, because these numbers were supplied by URS/Blume, and it was Dr. Blume's organization that derived the numbers of acceleration, et cetera, and I assume if you are in Circular 672 that that's what you're getting into.

We'd like to bring Dr. Blume back up.

wrb/agb6

Whereupon,

JOHN A. BLUME

resumed the stand as a witness on behalf of the Applicant, and, having been previously duly sworn, was examined and testified further as follows;

WITNESS BLUME: It's nice to be wanted.

BY MR. KRISTOVICH:

Q Referring to Page Three of Joint Intervenors' Exhibit Number 45, what are the peak horizontal velocities for a 7.5 magnitude earthquake?

A (Witness Blume) The first peak is listed at 135 centimeters per second. The second peak at 115, and the third peak at 100.

I must note also that these are not for rock.

Q Mr. McLaughlin, what figures do we use for shear wave velocity?

A (Witness Lee) 3600 feet per second.

Q And what's your basis for using that figure?

A Again, this information was given to us by John Blume.

MR. NORTON: Mrs. Bowers, I believe the 3600 feet per in the rock has been gone over and over and over. I assume we're not going to do it again. I mean, it's a given value.

BY MR. KRISTOVICH:

WRB/agb7

Q What percentage damping did you use for the tanks?

A (Witness Lee) I don't know anything about a tank.

A (Witness McLaughlin) That would be Dr. Udaka.

A (Witness Udaka) You're referring about the underground fuel storage tank?

Q Yes.

A Three percent.

Q Three what?

A Three percent.

Q And for the buried piping, what percent of damping?

A (Witness Lee) We don't use any percentage of damping.

Q For the piping?

A That's correct.

Q Mr. Udaka, what is the basis for the three percent damping for the tank?

A (Witness Udaka) Well, it's a steel structure, and normally you use seven or four percent, but three percent is more conservative, just I wanted to make sure I was on the conservative side.

Q Directing your attention to Page Three, Line Five, in calculating yield stresses, did you use the average of actual material values for concrete and steel for your acceptance criteria?

wrb/agb8

A (Witness McLaughlin) As I stated in my summary, we used the design stresses, design values. It was unnecessary, after the first analysis, to review actual stresses or actual strengths, excuse me.

Q Is it true that for circulating water intake conduits, the concrete was calculated to crack?

A (Witness Lee) If we are utilizing the concrete to resist tension, yes. But we do not use the concrete to resist any tensile force.

Q And the rebar was assumed to carry the entire tension load?

A That's correct.

Q What was the safety margin for the buried tanks at the most critical point?

A (Witness McLaughlin) That would be Dr. Udaka.

A (Witness Udaka) We computed several cases of loading conditions. The most critical case factor of safety is 1.83.

Q 1.83?

A Yes.

Q And where was that located?

A Give me probably one minute.

(Pause.)

Somewhere around the left corner, somewhere in here (indicating).

wrb/agb9

MRS. BOWERS: Now wait a minute --

WITNESS LAWSON: He's indicated a cross-section of the tank and indicating at about seven o'clock on the circular cross-section.

BY MR. KRISTOVICH:

Q How did you arrive at the figure 1.83?

A (Witness Udaka) Compared to the available strains and induced stress plus static stress. Initially we have some static stress because it's an underground structure, so we analyzed for the static case. Then we analyzed the dynamic case and we superimposed and compared the two strengths and division is a factor of safety.

Q What was the safety margin for the piping at the most limited location?

A (Witness Lee) Based on the specified design stress, the factor of safety for the auxiliary saltwater pipe is 1.8, and the factor of safety for the circulating water conduit is 1.3.

Q And how did you arrive at those figures?

A Those figures were arrived at -- first of all, we calculate the induced stresses on the pipe, and we divide the stress by the allowable stress and came up with the factor of safety.

d1G

2a flws

WRB/wbl

12.230

Q Directing your attention to page 3, lines 8 through 10, for the auxiliary salt water piping what is the ratio of allowable stress to calculated yield stress?

A (Witness Lee) Again, the allowable used stress is 30 KSI.

Q On page 3, at line--

A Excuse me; I think I am misunderstanding your question. Could you repeat the previous question, please?

Q For the auxiliary salt water piping what is the ratio of allowable stress to calculated yield stress?

A (Witness McLaughlin) Calculated yield stress? What's that?

Q I'll strike the question and move on.

MRS. BOWERS: The answer should be struck, too, then.

MR. NORTON: Yes. We would ask that the answer to the previous question which he didn't understand, which was the same question, be stricken.

MR. KRISTOVICH: That's fine.

BY MR. KRISTOVICH:

Q On page 3, lines 24 to 25, what do you mean by allowable limits?

A (Witness McLaughlin) That would be for Dr. Udaka.

A (Witness Udaka) The deformation we compute from the tank to, I guess, the turbine generator building is less

1 than design deformation which is -- we are given two inches
2 of allowable deformation between tank and, I guess, turbine
3 generator building. And our computation shows about a
4 quarter inch of displacement. So it's in the allowable range.
5 Q Well what is the minimum safety factor for
6 stresses?
7 A We didn't compute a stress. We just computed
8 how many deformations occur during an earthquake, how many
9 deformations alone. So it's just simply deformation, it's
10 not stress.
11 In other words, we don't use stress.
12 A (Witness Lawson) Perhaps I could amplify on that
13 a little bit.
14 Dr. Udaka is referring to the check of the motion
15 between the buried tank and the structure which is relatively
16 fixed with respect to the tank. One of the givens for his
17 analysis was that that piping connection was designed for
18 two inches of motion without overstressing. And he checked
19 the deflection and found it as a small fraction of an inch
20 and, therefore, did not approach the stress limits.
21 Q Did you do an OBE analysis for the tanks?
22 A (Witness Udaka) No.
23 Q For the underwater and diesel tanks-- For the
24 diesel tanks how were the horizontal and vertical loads due to
25 seismic sloshing of fluids included in your models of the

WRB/wb3

diesel fuel oil storage tanks?

A Okay. The fuel oil tank is essentially full, so--

Q Is essentially -- what?

A Full. So there is no void that must be filled with fuel oil and diesel oil. So we model diesel oil as a kind of solid.

Fluid can transmit p-waves but not shear waves, so we model the material type as close as zero for shear wave inside the tank. And we analyze both horizontal and vertical excitation independently. Later we add them together. So it's on an absolute sum basis.

300

MR. KRISTOVICH: Could the reporter read that back, please?

(Whereupon the Reporter read from the record as requested.)

BY MR. KRISTOVICH:

Q Dr. Udaka, correct me if I'm wrong, but does that mean you did not analyze the fluid motion in the tanks?

A (Witness Udaka) That's correct. And I would like to add: we don't need to analyze oil motion inside the tank because it's all full. So it acts as one body. There is no fluid action inside the tank.

Q How do you know it is all full?

A That's what I was given.

WRB/wb4

Q Will it always be full?

A Pardon me?

Q Will the tank always be full?

A Right.

Q If the tank were not full how would that change your analysis?

A We did not submit a result. But I personally performed that case. And it doesn't change that much the factor of safety.

Q How much is "not that much?"

A Well I didn't compute the factor of safety. I can see from the stress level. It is not required.

Q It's not -- what?

A It's not required.

MR. KRISTOVICH: No further questions.

MRS. BOWERS: Mr. Ketchen?

MR. KETCHEN: One moment, please.

(Pause)

MR. KETCHEN: The Staff has no questions, Mrs. Bowers.

EXAMINATION BY THE BOARD

BY MR. BRIGHT:

Q I'm having a little trouble with the physical picture of this relationship between the main cooling water conduits and the auxiliary sea water conduits. Where is the auxiliary salt water piping in relationship to the-- Ah, I see

WRB/wb5

1 you have a figure there.

2 A (Witness McLaughlin) There is a comparable

3 picture to this in the Hosgri Evaluation Report.

4 Q If you could cite that for the record it would

5 help, because that does clarify the situation. --to me, anyway.

6 MR. KRISTOVICH: Could we have a citation to the

7 comparable picture?

8 MR. NORTON: We're trying to find it in the Hosgri

9 evaluation. And as soon as we find it we'll give you the

10 cite.

11 MRS. BOWERS: Our copy of the Hosgri evaluation

12 has been in the mail for ten days, and we haven't received it.

13 MR. BRIGHT: No; my secretary has been mailing it

14 for ten days.

15 (Laughter)

16 MR. NORTON: Could we go on? As soon as find

17 the reference we'll give it to you.

18 MR. BRIGHT: Fine.

19 BY MR. BRIGHT:

20 Q I just have one other thing. On page 3-- I think

21 I've gone through this little tapdance before during this

22 hearing. Now on line 5, "The yield stress for the materials"--

23 and I presume by this you mean a particular material of

24 construction. --"was established as the acceptance criteria

25 for stresses." Okay. Fine.

WRB/wb6

1 Then we go on down and we see "The results
2 demonstrate that the stresses meet this criteria."
3 Now is that just one material? Is there only
4 one criterion, or are there a number of criteria? Because
5 it's confusing to me. I don't know whether you're talking
6 about one thing or--
7 MR. NORTON: Excuse me, Dr. Bright. You must
8 remember that this panel wasn't here when we went through
9 the tapdance before. And the question revolves around the
10 singular and plural use of the word.
11 BY MR. BRIGHT:
12 Q All I'm saying is, it is "these criteria" or
13 "this criterion" and I just would like to know which.
14 A (Witness McLaughlin) I believe these criteria
15 involve several materials, concrete and steel, which have
16 different properties, different yields. So that "these" --
17 plural -- is to the various materials.
18 Q It would be "these criteria," then. That clears
19 it up very nicely.
20 MR. NORTON: Line 10 of the testimony, if you
21 read the last two words of the sentence, it says "this
22 criteria." And what you're saying, in other words, is it
23 should be "these;" is that correct?
24 WITNESS MC LAUGHLIN: I believe so, yes.
25 MR. NORTON: Okay.

WRB/wb7

MR. BRIGHT: Thank you.

WITNESS LEE: Excuse me. The figure is in the FSAR, 9.2.

MR. NORTON: That's the FSAR, not the Hosgri Report?

WITNESS LEE: Not the Hosgri.

MR. NORTON: Okay.

And, fortthe record, that was the figure that Dr. Bright asked about, or that was shown to Dr. Bright regarding relationship of -- and somebody is going to have to finish that sentence.

WITNESS MC LAUGHLIN: --the concrete cooling water conduit and the two 24-inch auxiliary salt water pipes.

MR. KRISTOVICH: Would it be possible-- We don't have the FSAR with us. Could we see the diagram, please?

(Document handed to Mr. Kristovich)

MR. NORTON: Mrs. Bowers, I think we can proceed with Board questions.

BY MRS. BOWERS:

Q Well I have a question, and it may be that this panel really is not the appropriate group.

When we were considering some of the earlier structures, of course I understood when you're talking about containment and the turbine building and the intake and that sort of thing. But with the last panel and also with this

WRB/wb8

panel what I'm wondering is, if something happened to the buried tanks and the piping systems that are covered here, are they essential to the operation, or are they kind of auxiliary? Could there be a loss of some of this equipment and still the reactor function fully?

A (Witness McLaughlin) Mrs. Bowers, for this panel this was a given, that the integrity of the pipes, or the integrity of the tanks must remain intact. It was a given. What effect it has on the system analysis is for another group.

MR. NORTON: Yes, Mrs. Bowers. This panel is not the panel to answer that question. That is not to imply an answer to your question, but this is not the panel to answer your question. It will be systems and functions required, which is going to occur maybe later this afternoon: Mr. Gangloff of Westinghouse, Mr. Gormley, Mr. Laverty and Mr. Shiffer, all the latter three of Pacific Gas & Electric. It's about two panels away.

MRS. BOWERS: I'll wait.

Well let's check with the parties and see if there is redirect or if the Board's questions raised any questions.

xxxxxx

REDIRECT EXAMINATION

BY MR. NORTON:

Q Dr. Bluma, first I have a question or two for you. Circular 672 was brought out again, and after some

WRB/wb9

of the witnesses testified about the velocities used in this analysis and then you were asked to read off the velocities listed in Circular 672 for a magnitude 7.5 earthquake.

My question to you is: Do those velocities that were read by you that were contained in Circular 672 apply to the Diablo Canyon site?

A (Witness Blume) No, not at all.

The reason is that--

Q Well, Dr. Blume, you don't have to go any further. You have answered the question.

Another term that I've heard used a number of times is "cracked concrete."

Dr. Blume, could you-- To a layman, I can think of a wall that's cracked diagonally from corner to corner or from top to bottom or, you know, end to end, or something like that. Is that what you mean by a crack in concrete? Is that the way the term is being used here?

A No, not in the usual usage. Concrete by its very nature has to crack a tiny amount before the reinforcing steel can go into tension to any appreciable degree. This is allowed for in design. It's the nature of the material. And it explains why concrete has to be reinforced.

So usually the term "cracks" that I've heard around here implies that type of cracking that shows that the concrete is working as it is supposed to work.

wrb/agbl
flwswrb/wb9

Q All right.

So, for a future reader of the record then, when we're using the term in concrete, we're not talking about a crack that you can see that goes the entire length of the concrete wall or anything like that?

A No, those would be diagonal damage cracks as compared to the normal type of cracks that we get from stress.

Q All right.

Dr. Udaka, you were asked some questions about assuming that you were given as an assumed that the tanks were full and you did your analysis on that basis, and then you were asked if the tanks were always full, and I believe you said -- and I'm not sure, correct me if I'm wrong -- that even though you weren't asked to, you personally did some sort of an analysis with the tanks not full, is that correct?

A (Witness Udaka) Yes, I was expecting that kind of a question before the NRC hearing, so I performed that analysis just in case.

Q All right. Let me ask you this then: if the tanks were only one-half full, would the conclusions of your analysis change?

A Well my personal feeling is no, but I haven't done any analysis of the half-full case, so that's my opinion.

Q What case did you do?

wrb/agb2

A Just the empty case and the full tank and just the tank has no stiffness -- excuse me, oil has no stiffness and only mass.

Q So in your opinion then, if it were less than full, the results would not change significantly enough to put it in a condition where your conclusions would change?

MR. KRISTOVICH: Objection, Mrs. Bowers, it's a leading question. I believe the witness has already answered the question, and now Mr. Norton is just rephrasing it and leading the witness which is inappropriate.

MR. NORTON: I'll rephrase the question.

MRS. BOWERS: I thought he was rephrasing it to make sure that there was complete communication.

MR. NORTON: I'll rephrase the question again.

BY MR. NORTON:

Q Is it your testimony, Dr. Udaka, that if you were to do the analysis showing the tank partially full or less than full, that your conclusions would be the same?

MR. KRISTOVICH: Objection. Dr. Udaka has already stated he hasn't done the analysis. I don't understand the basis for asking if he were to do this hypothetical analysis.

MRS. BOWERS: Well he stated he did an analysis with the tank full and an analysis with it empty, and Mr. Norton is trying to find out if there was a significant difference in the conclusion.

wrb/agb3

MR. KRISTOVICH: That's not the way I understood the question that was asked.

MR. NORTON: That's exactly the way it was asked.

MRS. BOWERS: Dr. Martin says the question stated a conclusion.

DR. MARTIN: It contained one.

MRS. BOWERS: Actually, in an administrative hearing -- and I haven't volunteered this before -- it's permissible to ask leading questions on direct as well as on cross-examination.

Now, leading questions don't carry -- the answers don't carry the same weight as a proper question that is not leading. But certainly there is no clear prohibition against them.

MR. NORTON: Well Mrs. Bowers, I'll try to frame the question so it isn't leading. Obviously, what I'm trying to find out is what Mr. Udaka's opinion is regarding an analysis of the tank where it contains fluid more than empty and less than full.

BY MR. NORTON:

Q With that, Mr. Udaka, could you tell us what your opinion is?

I don't think that's leading at all.

MR. KRISTOVICH: Objection. Are you asking what his opinion would be if he were to do the analysis?

wrb/agb

MR. NORTON: I'm asking him what his opinion is, period, and if you want to cross-examine further -- Mrs. Bowers, if counsel wants to cross-examine further after the answer he can.

MRS. BOWERS: Well what's the basis for the objection?

DR. MARTIN: That question was asked earlier and answered. He gave you his opinion.

MRS. BOWERS: Well he gave the opinion on the empty and the full, but you're apparently looking for something in between.

MR. NORTON: Where it's got some liquid in it.

MR. KRISTOVICH: I guess the problem is I believe Dr. Udaka has done the analysis when it's empty and when it's full and hasn't done the analysis for anything else, so I'm having a hard time knowing how he can form an opinion when he hasn't done the analysis.

MRS. BOWERS: Well as an expert witness, can't he give an opinion?

MR. NORTON: Well I can lay some foundation for that opinion too.

BY MR. NORTON:

Q Based on the analysis that you did, Dr. Udaka, for the tank full and based on the analysis you did for the tank empty, are you able to arrive at an expert opinion as to

wrb/agb5

what an analysis would show with the tank partially full?

A (Witness Udaka) My answer is yes.

Q All right.

A Because we have plenty enough margin factor of safety, so even in the half-full case I think the structure is safe enough during the earthquake.

MR. NORTON: I don't have to ask the next question.

MRS. BOWERS: Does that conclude?

MR. NORTON: Let me check my notes.

(Pause.)

BY MR. NORTON:

Q Now we talked about the buried tank, and there was some question, I believe, about the stresses in the tank, the buried tank itself. Were the stresses in the tank determined?

A (Witness Udaka) How or where?

Q Were they determined, the stresses in the tank itself, were they determined?

A Where?

Q No, were.

A Yes.

Q I'm sorry, I thought when that question was asked before you said no in cross-examination, but I thought there was some confusion there and that's why I asked the question again.

A Okay. There are two purposes for this underground

wrb/agb6

storage tank. One is safety for the piping system connected to the turbine generator building and the safety tank itself, the two purposes of this analysis. And the piping system connected to the turbine generator building is analyzed based on the deformation, and the tank itself was analyzed based on the stress induced.

Q And what were the results of the analysis?

A Both show safe. Earlier in this testimony, I made myself clear about the factor of safety, 1.83, which is based on stress.

Q And that's the tank itself?

A Right.

Q Fine.

MR. NORTON: I have no further redirect.

MRS. BOWERS: Mr. Kristovich?

MR. KRISTOVICH: I have a few questions.

RECROSS-EXAMINATION

BY MR. KRISTOVICH:

Q First of all, does the intake conduit rest on bedrock?

A (Witness McLaughlin) Yes, the intake conduit is confined on both sides and the bottom on rock.

Q Now Dr. Blume, I believe you testified that the figures in Joint Intervenors' Number 45, which is USGS NUmber 672, the figures on Page Three were not applicable.

wrb/agb7

MR. NORTON: Object, I believe it was the velocities.

MR. KRISTOVICH: Well, the figures we were discussing, which were the velocity figures for the 7.5 magnitude earthquake.

BY MR. KRISTOVICH:

Q Can you explain why they're not applicable?

A (Witness Blume) They do not apply to the Diablo Canyon site because that's a rocky site, and the values in 672, many of them are from alluvial sites. Alluvium shakes in velocity and displacement a lot more than rock, which is not true for acceleration close in.

Q Well we'll give you our copy of USGS Number 672 and we'd like you to point out where in there it says the figures are based on alluvial sites, the figures for velocity.

A The plots shown in 672 of magnitude versus distance.

Q We're talking about the velocity and Table Two, Dr. Blume.

A I realize that.

MR. NORTON: We would ask that counsel quit interrupting the witness and let him answer the question.

WITNESS BLUME: Figure 8 of 672 is a plot of velocity in centimeters per second versus distance for a whole group of earthquakes of magnitudes ranging from 5 up to 7.9,

wrb/agb8

and there's only a very few in this whole mass of data that are on rock, I happen to know that whether I read 672 or not. And I also happen to know that ground, as I said, shakes more in velocity on alluvium than it does on rock.

Q I'd like to refer you to Page Three of this document.

A Page Three?

Q Page Three, the right-hand column. I don't know which paragraph specifically, but there are some underlined sentences. You might designate which paragraph it is, and perhaps you could read it.

A Well the lower underlined --

Q Dr. Blume, could you read the sentences you're referring to?

A Well I want to first clarify. You've got two underlined sections.

Q The bottom underlined section.

A The bottom underlined section reads as follows:

MR. NORTON: Excuse me, I unfortunately don't have Intervenors' counsel's copy, and I'd like to know where we're reading from.

MRS. BOWERS: Well your witness has --

MR. KRISTOVICH: Joint Intervenors' Number 45, Page Three, the right-hand column. We don't have a copy either.

wrb/agb9

MR. NORTON: Well does everybody have the same copy, because you talked about two sets of underlining in that column and I only have one set of underlining, that's why I thought maybe you had some additional underlining on your copy that I don't have on mine.

MR. KRISTOVICH: That's correct. We just underlined something for Dr. Blume.

MR. NORTON: That's what I was trying to find out, where it was.

WITNESS BLUME: It's in the lower right-hand paragraph of Page Three of Document 672.

MR. NORTON: Okay. Thank you.

WITNESS BLUME: And they have underlined a portion which I will now read:

> "They correspond to normal or average geologic site conditions and are not intended to apply where ground motion is strongly influenced by extreme contrasts in the elastic properties within the local geologic section."

End of underlined portion.

BY MR. KRISTOVICH:

Q So does this mean that the values in Table Two are for an average site, then?

A (Witness Blume) Yes, and do not apply for extreme conditions which is Diablo Canyon, an extreme condition.

wrb/agb10

Q What do you mean by "extreme condition," Dr. Blume?

A Rock, as compared to typical alluvium.

MR. KRISTOVICH: No further questions.

MRS. BOWERS: Mr. Ketchen?

MR. KETCHEN: I have no further questions.

MRS. BOWERS: Well the Board has no further questions.

MR. NORTON: WE have no more redirect.

MRS. BOWERS: Why don't we take a 10-minute break, because we took one earlier.

What about this panel? Any objection to those being excused who are not scheduled for later panels?

MR. KRISTOVICH: No objection.

MR. KETCHEN: No objection.

MRS. BOWERS: Well those panel members who are not slated for later panels are excused.

(Witness panel excused.)

(Recess.)

MRS. BOWERS: Do you have your next panel, Mr. Norton?

MR. NORTON: We have Mr. Steinhardt, who is here now.

Basically, Mrs. Bowers, this testimony deals with the placement on instrumentation within the facility that will measure strong motions, et cetera. This presentation was made to the ACRS and while it's not really related to the safety of operation directly, we thought it would be of interest to the Board to hear this presentation.

It's not going to be a two or three minute summary. There's going to be a bunch of Vugraphs, and the diagrams and so on are attached to the written testimony. But we thought we'd have Mr. Steinhardt go through it. The ACRS found it very helpful, and it also gives a pretty good overview of the physical layout of the facility.

MRS. BOWERS: Has Mr. Steinhardt been sworn?

MR. NORTON: No, he has not.

Whereupon,

O. W. STEINHARDT

was called as a witness on behalf of the Applicant and, having been first duly sworn, was examined and testified as follows:

DIRECT EXAMINATION

BY MR. NORTON:

Q Mr. Steinhardt, have you reviewed the professional

qualifications that were submitted for you in this case?

A I did.

Q And are they a true and correct copy of your professional qualifications?

A Yes.

MR. NORTON: Mrs. Bowers, we would ask that they be physically inserted in the record at this time.

MRS. BOWERS: Mr. Kristovich, do you have any objection? This is just the qualifications.

MR. KRISTOVICH: Fine. No objection.

MRS. BOWERS: Mr. Ketchen?

MR. KETCHEN: No objection.

MRS. BOWERS: The professional qualifications will be physically inserted in the transcript as if read.

(The document follows:)

UNITED STATES OF AMERICA
NUCLEAR REGULATORY COMMISSION

BEFORE THE ATOMIC SAFETY AND LICENSING BOARD

In the Matter of	)	Docket Nos. 50-275
	)	50-323
PACIFIC GAS AND ELECTRIC COMPANY	)	
	)	Applicants Ex. No. 7
(Diablo Canyon Nuclear Power	)	
Plant, Units No. 1 and 2)	)	December 1978

PROFESSIONAL QUALIFICATIONS
OF WITNESSES FOR
PACIFIC GAS AND ELECTRIC COMPANY

Name: Otto W. Steinhardt

Title or Position: Senior Civil Engineer

Degrees: B.S., U.S. Military Academy, 1944; M.S. (Civil Engineering), State University of Iowa, 1949

Professional Experience: Joined PGandE in 1968 after 19 years with (a) U.S. Army, (b) Bethlehem Steel Co., (c) Howard-Needles-Tammen-and-Bergendoff Consulting Engineers, (d) University of Arizona Civil Engineering Department, (e) University of Utah Civil Engineering Department.

At PGandE, coordinated structural design and construction of the Auxiliary Building of Diablo Canyon Power Plant (2 years), then (from 1971 to date) worked on various aspects of design, procurement and construction to improve the earthquake

resistance capability of Company facilities.

Professional Civil Engineer, State of California.

BY MR. NORTON:

Q Mr. Steinhardt, do you have any corrections to make to the written testimony at this time?

A In the middle of page 3, under "Containment Structure, Foundation Mat," in the line following the sub-title "Foundation Mat," delete "over 10," substituting 14.5.

On page 4, under the sub-title"2. Containment Exterior," in the first line following, "3.5 feet" should be changed to 3.67 feet.

On page 5, second line, after "Interior Concrete," the 3 should be changed to a 2.

wel 4

On the same sheet, second line above the sub-title "Auxiliary Building," after the word "installed" insert "at the top of a steam generator mounted" so that the sentence now would read:

"Also, a PRA is installed at the top of a steam generator mounted at Elev. 140 ft. on the Interior Concrete."

On the same page, three-quarters of the way from top to bottom --

Q We have line numbers, Mr. Steinhardt.

A Oh, yes. Line 20. After 100 ft), insert the words "west end."

MR. KRISTOVICH: That's line 20?

THE WITNESS: 20.

On page 5, again, line 25, 3 should be changed to 2.

On the same page, the last line, after "Building" and before the period, insert the words, "and one at Elev. 60 ft."

On page 6, between lines 17 and 18, the sub-title "Intake Structure," underscored, should be inserted, followed by the statement:

"One PRA is installed near each pair of Class-1 pumps, at Elev. -2 ft."

MR. KRISTOVICH: Can you go over that one again,

wel 5

please?

THE WITNESS: Page 6, between lines 17 and 18, "Intake Structure," "One PRA is installed near each pair of Class-1 pumps --

MR. BRIGHT: Installed near each pair?

THE WITNESS: Excuse me.

Page 6, between lines 17 and 18, insert the Sub-title, "Intake Structure," with an underscore, followed by the statement:

"One PRA is installed near each pair of Class-1 pumps, at Elev. -2 ft."

On Figure 4, the last sheet, the capital letter "P", designating PRA, should appear in the area of the 230 KV switchyard, and near the center of the 500 KV switchyard.

BY MR. NORTON:

Q That doesn't make much sense, I don't believe, Mr. Steinhardt. Could you try another way of explaining that correction?

A Figure 4 shows the general layout of the plant, and part of the figure designates an area where the 230 KV switchyard is, and another one where the 500 KV switchyard is.

A PRA is installed in each of those switchyards.

Q So you need a large "P" in the switchyard where the arrow is, is that the idea?

A Correct.

Q Now, the 500 KV switchyard, I don't see any arrow.

A Well, the arrow has been omitted, but the switchyard I think is clearly indicated. There's a sort of rectangular area, and near the center of it there should be a capital "P". I think the exact location of those "P's" is not very relevant.

Q Is that all the corrections you have, Mr. Steinhardt?

A Yes.

Q At this time, Mr. Steinhardt -- I appreciate yours is not going to be a two or three minute summary, but could you make your presentation at this time?

MRS. BOWERS: Are you going to ask that the testimony go in?

MR. NORTON: I think following the presentation.

(Slide.)

THE WITNESS: There's a large number of strong motion instruments installed at the plant site. They can be described as consisting of a basic system and a supplementary system.

The basic system consists of nine acceleration sensors, and at this point I'd like to interpolate an explanation.

Whenever one discusses strong motion instrumentation involving accelerometers, one expects to find a three

1 axis accelerometer, two horizontals and one vertical,
2 typically.
3 There are reasons why in this case not all of
4 our instrument packages that contain accelerometers have
5 three axes, and so some of the instruments are three axis,
6 some are bi-axial, and in one case we have simply a single
7 vertical sensor -- vertical accelerometer. And I've used
8 the word "sensor" to indicate not an accelerometer, because
9 that might be misconstrued as bi-axial, but to indicate one
10 axis. And there may be three axes or two axes, or one.
11 So in the basic system we have nine acceleration
12 sensors, which happen to be three tri-axial instruments,
13 Kinemetrics.
14 We have one tri-axial response spectrum recorder,
15 which is a non-electrical device consisting of vibrating
16 reed type devices.
17 Six tri-axial peak recording accelographs. And
18 here we are not using any PRA's which are not tri-axial. So
19 I haven't listed them, the individual sensors contained
20 therein, separately.
21 One tri-axial earthquake force monitor, which
22 I'll allude to later.
23 One central recorder, which in the Kinemetrics
24 portion of the system -- in other words, the basic system --
25 is an analog recorder and a playback unit, which is also
analog.

MRS. BOWERS: Are you going to have copies of these transparencies?

MR. NORTON: They are, I believe, attached to the testimony.

MRS. BOWERS: No, they are not. At least these two are not.

MR. NORTON: Well, we can make them.

THE WITNESS: May I suggest these are almost word for word excerpts from the prepared testimony, and it didn't seem particularly useful to provide direct copies of anything except the diagrams.

MR. NORTON: With that basis, I don't really think we need to make copies for the record. In other words, unless someone wants them. We can, but they're just a written summary of the testimony shown on the screen.

But we'll make copies if people want them.

MRS. BOWERS: Mr. Kristovich?

MR. KRISTOVICH: It doesn't really matter.

MRS. BOWERS: Mr. Ketchen?

MR.KETCHEN: We don't think we need copies.

MRS. BOWERS: Fine. We won't have copies, then.

THE WITNESS: The supplemental system which is being installed at the present time, whereas the basic system has been in being for several years, the supplemental system consists of 58 acceleration sensors. Terra Technology took

1 the bid on this portion of the job.

2 Seven tri-axial peak recording accelerographs,

3 which are the same instruments as mentioned previously in

4 the basis system.

5 One seismograph recorder. This one is digital,

6 and it's similar to the recorder mentioned in the basic

7 system.

8 And a playback plotter, analog, by Terra

9 Technology, but again similar to the playback unit mentioned

10 under the basic system.

11 (Slide.)

12 The basic system was installed for the purpose of

13 satisfying the requirements, and the requirements are to

14 have seismic instrumentation which will enable determination

15 of whether or not the seismic design basis of the plant have

16 been exceeded in case there is a seismic event which is felt

17 at the plant.

18 (Slide.)

19 The supplemental system is being installed in

20 response to a great amount of interest that was expressed

21 by the Advisory Committee to have the capability at this

22 plant of capturing a more than minimally adequate record of

23 whatever strong motion events might be felt at the plant.

24 Specifically, the supplemental system is

25 intended to more or less duplicate and expand the capabilities

to satisfy the requirements for which the basic system is in being, but also to collect enough data in conjunction with the basic system so that it will be possible to check the analytic procedure that has been used in the design and in the Hosgri evaluation of the plant.

In many cases we are depending on analytic methods that can only finally be proven out if you have an earthquake, and you are fortunate enough to record data at sufficient points and sufficiently accurately so that you can see whether the procedures actually worked out, and also to evaluate the interaction of soil and structure, and structure and structure through the soil.

Also, not on this slide, but in the prepared testimony I mentioned that we hoped to have enough data to evaluate the effects of the passage of seismic waves through the large foundations of these structures.

(Slide.)

The sensors in the supplemental system, unlike in the basic system, are equipped with a capability for automatic gain ranging, which means that we can start out with a very sensitive setting which will successfully record strong motion that isn't very strong, such as from a distant earthquake or from a small nearby earthquake.

This would have the unfortunate consequence of immediately going off scale in case we had a nearby strong

motion event.

And so we have in the supplemental system the automatic feature that as soon as the sensor is about to go off scale, an internal switch is flicked which decreases the sensitivity and then if at the new lower level of sensitivity the signal is still strong enough to possibly throw the instrument off scale, the switch will flick to the still lower level of sensitivity and thus, hopefully, will get down to a low enough level so that we will have a good record of the entire event without going off scale.

The basic system does not have this feature and, therefore, it's not quite as sensitive as -- well, by several multiples it's not as sensitive as this is.

On the other hand, we feel that it is sensitive enough for the purpose of the basic system.

(Slide.)

Incidentally, with reference to the preceding slide, in order that the switchover not introduce an extraneous signal that might look like a large acceleration peak that wasn't there, the supplemental system has a memory of about two seconds. So that having switched, it can then go back at least part of a second and pick up data that has been temporarily stored, and thus eliminate the possibility of this changeover transient unwanted record.

In order to start the system, both systems, we have

triggers. There is a trigger on the base of the containment of Unit 1, on the level of the operating deck of the containment, Unit 1, and at the springline of the dome.

The springline of the dome is where the hemispherical dome sits on the top of a cylinder. These triggers initiate the recording of earthquake motion, and then keep the recording system going until all significant response has ended.

In other words, there's a threshold level that starts the system, and then there's a preset integral where the system goes on recording and will shut off unless the triggering level is exceeded again during that period, upon which a new preset run period starts.

(Slide.)

Once the system is triggered, the electrical signals go from each sensor into a central recorder. The central recorder for the basic system is in the control room for the supplementary system. Due to the desire to avoid undue congestion in the control room, the recorder is situated at a floor level below there.

But in order that we be able to use the recorded data with the maximum effectiveness, it's very important that we be able to compare the time at which a peak occurred at one location in the plant with the time at which a peak -- a comparable peak -- occurred elsewhere in the plant.

And so on each record we have a timing signal, and the timing signal is -- or will be -- common to the two systems.

In order that we not lose our recording capability in the unlikely event that the power supply to the plant is knocked out and the plant has to stop generating electricity, there is a battery supplied -- the manufacturer refers to it as an uninterruptible supply of power. The batteries supply the power to the system, and a trickle charger keeps the batteries freshened up so that they can do the job.

In case of total loss of power the batteries are sufficient to provide at least one hour of continuous operation, which should be enough to capture all of the significant aftershocks.

(Slide.)

The system functions quietly. Therefore, in order that the operator in the control room know that an earthquake has occurred and is being recorded, there is an annunciator light -- not a sound system, because in case there is actually a felt earthquake there will be plenty of other sounds in the control room so that we don't want to add one more sound.

But there will be a light, and this light will go on whenever the recording is taking place, even if the seismic event being recorded was too small to be felt.

1 Of course if the event was a strong one, the
2 annunciation will not really be necessary, except to
3 reassure us that the system is going. But if it isn't
4 going, they will be too busy to do anything about it anyway.
5 It will be going.
6 Also, there is in the control room as part of the
7 basic system the earthquake force monitor, which automatically
8 records the peak acceleration felt by one of the sensors on
9 the base of the Unit 1 containment, and holds that informa-
10 tion on display, so that the operator can check to see what
11 the record shows.
12 If the operator needs to know more about these
13 accelerations, perhaps one other instrument in the system,
14 the playback unit, can be used to call forth a display of
15 the acceleration record --
16 (Slide.)
17 -- from any of the other instruments.
18 Now, the instruments I've alluded to are
19 displayed here schematically, and I have not tried to
20 distinguish which are the basic and which are the supplemental
21 system, but essentially it's all one system for this
22 purpose.
23 In the containment we have -- note the symbols.
24 The + with a circle around it, a tri-axial -- this says
25 tri-axial sensor. Actually it means three sensors. The

+ without the circle means two sensors, and in each case one of those sensors is vertical, if there are only two.

And then we have one sensor which is purely vertical.

On the base of the Unit 1 containment we have three tri-axial sensors which are actually distributed around the perimeter of the base, although here it looks as if they're in a straight line.

Additionally, at one point on that base we have at the same location a response spectrum recorder, a peak recording accelerograph, and a trigger.

Also at that elevation, but on the interior of the containment, we have a vertical sensor which is located here, because there's the possibility that this what looks like a very rigid foundation mat might have some bending and, therefore, the vertical accelerations near the center might possibly be different from the vertical accelerations around the perimeter.

To verify that they are or are not, we can consult the vertical sensor.

MADELON
mpbl
flws
1

Also to compare the signals received on the foundation of Unit 1 with the signals received on the foundation of Unit 2, we have three biaxial sensors installed around the perimeter of the base of Unit 2. Because of the similarity of the two structures it didn't seem necessary to duplicate further the instrumentation in Unit 2 that's in Unit 1.

On the operating deck level of the containment -- well, first let me cover the exterior of Unit 1.

Besides the triaxial instruments on the base, we have three triaxial instruments distributed around the spring line of the dome, and we have a triaxial instrument at the top of the dome. Also at the top of the dome is a PRA, intended primarily to check the triaxial instruments, or perhaps to pick up a record in case the electrical system for some reason should fail, because PRA is a nonelectrical device.

On the spring line -- and these are inside the shell of the structure, but on the wall -- one of the instrument locations is also a trigger.

Inside the containment, Unit 1, on the operating deck level there are three triaxial instruments on the interior concrete, and there are two biaxial instruments on the slab at the top of the annulus, the steel annulus structure. And additionally there is a PRA which here I have shown at elevation 140. But actually this PRA is installed on a piece of equipment which has its feet at elevation 140,

mpb2

but in fact the top, the steam generator number one is about 25 feet higher than that.

And then one of the instrument locations at elevation 140 is part of the triggering system.

MRS. BOWERS: Mr. Steinhardt, this appears to be identical to Figure 1 in your testimony.

THE WITNESS: Yes.

MRS. BOWERS: But that identification doesn't show at the bottom. But it is identical, is that right?

THE WITNESS: It is intended to be identical.

I would like to apologize for my sense of economy. I had these slides made up for the ACRS presentation, at which time they were not designated by figure numbers. And I'm trying to reuse them rather than have them remade.

MRS. BOWERS: Very commendable.

(Laughter.)

(Slide.)

THE WITNESS: A slide that should be labeled Figure 2 shows very schematically the auxiliary building. For simplicity of reading, I've omitted a few important features. For instance, the fuel handling building which stands on top of the structure here is completely omitted. And rather than showing all kinds of floor plans and cross-sections, I've tried to use X-ray vision to get into the structure and

mpb3

1 show the instrumentation.

2 The lowest hold of the auxiliary building is at

3 about elevation 55. The lowest floor level normally is at

4 elevation 60. And approximately at elevation 60, although

5 I think it's actually at elevation 64, is a triaxial sensor.

6 And then directly above it on the -- let's see. I think

7 that's the east end -- on the east end of the structure

8 directly above it at elevation 100 is a triaxial sensor. And

9 then at that same elevation at the west end is a triaxial

10 instrument. And at that same elevation at the northeast end

11 of the building is a triaxial instrument.

12 The idea, as you can guess, is to try to check

13 from top to bottom and from side to side, from end to end,

14 with a minimum number of instruments, because this is a fairly

15 expensive system we're talking about, but to pick up enough

16 data to indicate differences of response at the different

17 elevations and different locations at the same elevation.

18 Elevation 100 was selected as the one to put most

19 of the money on because in this complicated building we have

20 foundation at elevation 55, elevation 60, at elevation 85,

21 and elevation 100. It's very difficult to determine what

22 was a good best location. But elevation 100 seemed quite

23 appropriate.

24 Supplementing the triaxial instruments are some

25 peak recording accelerographs, one at each end of the top floor

mpb4

of the concrete portion of the auxiliary building at elevation 140, one here and one here.

(Indicating.)

And then this sketch shows a PRA, which it was subsequently decided would be better placed elsewhere. And so perhaps I should have corrected this figure; I didn't do so.

This P should appear down here at elevation 60 at the west end of the building corresponding to the triaxial accelerometer which is at that elevation at the east end.

BY MR. NORTON:

Q We should have the record show that when you said "this P should be moved" to a certain area, the area you indicated I think is sufficiently identified in the record. But when you said "this P" I take it it was the P that was approximately -- from the words "control room" -- at about the, oh, ten o'clock position from that word.

A Yes. Thank you, Mr. Norton.

The P which was intermediate along the line which has three Ps on it is the one which should be displaced to the lowermost elevation of the auxiliary building at the west end.

(Slide.)

In the basic system the turbine building was ignored because it was considered not a class 1 structure.

mpb5

Whether it is now considered a class 1 structure or not is irrelevant. It is certainly considered an important structure from the viewpoint of collecting an adequate amount of data. And so a fairly extensive amount of instrumentation is going into that.

In order to test the response of the turbine building from end to end, because of the great distance from one end to the other, we have a triaxial accelerometer at the north end of Unit 1 and a triaxial accelerometer at the south end of Unit 2 at elevation 85. And then, just to pick up a useful bit of information, approximately half-way between we have a PRA at elevation 85.

The response of the structure is of some importance, not quite as much importance as catching the variations or possible variations across the foundation level. And so at elevation 140, the turbine deck, we have a biaxial accelerometer at one end, the north end. And for economy's sake, at the other end, simply a PRA to pick up a comparable bit of data, so that we can check what should be essentially the same amplifications from top to bottom at that end as this end.

And then, because at elevation 119 we have the Class one equipment which is in this structure, a PRA is provided in the Unit 1 area.

MRS. BOWERS: And that was Figure 3 in your direct

mpb6

testimony, is that correct?

THE WITNESS: That's correct. Thank you.

(Slide.)

And now we come to what should be Figure 4.

Basically this figure is intended to show the free field instruments. One triaxial instrument is installed near the reservoirs. This figure does not quite correctly show where that instrument is. In fact, the triaxial instrument should be shown between the reservoirs -- well, let's see -- east of the line -- well, slightly east of the reservoirs rather than northwest of them as shown here -- rather than north of them it should be southeast of the reservoirs.

The other two triaxial free field instruments are correctly shown, one not far from the construction warehouse and batch plant, and one near the intake structure but up on the hill behind the intake structure, not far from the meteorological tower, which is at that location.

(Indicating.)

These instruments are placed far enough from the plant so that the influence of the presence of the massive buildings of the plant will not be felt at those locations.

Additionally, I've used this figure to show that there are two PRAs in the intake structure mentioned in the correction I posted to the written testimony earlier. And there are two PRAs in the switchyard, that is one in the

mpb7

230 kv switchyard and one in the 500 kv switchyard, again a correction which I mentioned for Figure 4 earlier.

That concludes my presentation.

MR. NORTON: We would ask at this time that Mr. Steinhardt's testimony be placed in the record as though read.

MRS. BOWERS: Mr. Kristovich?

MR. KRISTOVICH: Well, I had originally intended to make a motion to strike Mr. Steinhardt's testimony as not being relevant to any of the contentions before the Board. But after Mr. Norton's preamble, I have no objections.

MRS. BOWERS: Mr. Ketchen?

MR. KETCHEN: No objection.

MRS. BOWERS: Well, the testimony will be physically inserted into the transcript as though read.

(The Testimony of O. W. Steinhardt follows:)

TESTIMONY OF
O. W. STEINHARDT
ON BEHALF OF
PACIFIC GAS AND ELECTRIC COMPANY
DECEMBER 4, 1978
DOCKET NOS. 50-275, 50-323

SEISMIC INSTRUMENTATION SYSTEMS

GENERAL DESCRIPTION

Seismic instrumentation consists of a Basic System installed in 1974 to meet the minimum requirements of Regulatory Guide 1.12 and a Supplemental System installed in 1978.

The Basic System consists of:

9 acceleration sensors (3 triaxial instruments) Kinemetrics FBA-3

1 triaxial Response Spectrum Recorder, Engdahl PSR1200

6 triaxial Peak Recording Accelerographs, Terra Technology PRA-103

1 triaxial Earthquake Force Monitor, Kinemetrics EFM-1

1 Central Recorder (analog), Kinemetrics SMA-3

1 Playback Unit (analog), Kinemetrics SMP-1

The Supplemental System consists of:

58 acceleration sensors (15 triaxial instruments, 6 biaxial, 1 uniaxial), Terra Technology SA 112

7 triaxial Peak Recording Accelerographs, Terra Technology PRA-103

1 Seismograph Recorder (digital), Terra Technology, DCS 302

1 Playback Plotter (analog), Terra Technology SMR 102

The purpose of installing the Supplemental System, which is beyond the minimum required to satisfy regulatory requirements, is to collect enough data in the event of an earthquake affecting the plant site to:

1. Evaluate the effect of large foundations on the passage of seismic waves.

2. Provide information on structure-soil-structure interaction.

3. Check the dynamic structural analysis procedure by determining the contribution of various modes to the response of the structure at various locations.

The sensors in the Supplemental System have automatic gain ranging capability, which insures that both strong and weak seismic events will be fully recorded. Also, each instrument has a memory window of approximately 2 seconds so that a short-term averaging triggering program can be used and filtering of ambient noise from the seismic event records can be done.

Triggering is accomplished, in the Unit 1 Containment Structure, at the following locations:

1. base
2. operating deck
3. springline of dome.

These locations were selected to provide for both initiating the recording and keeping it going until all significant response has ended.

The instrumentation described herein satisfies the intent of Section 5 of the 1977 draft of ANSI 18.5 (Reference 1) and considerably exceeds the minimum requirements of that document.

STRUCTURE ARRAY

Containment Structure

1. Foundation Mat (Units 1 & 2)

The foundation mat is over 10 feet thick and is expected to behave as a rigid disc. However, there is a drop section about 30 feet deep in the center of the mat. This could result in differences between the vertical accelerations at the edge of the drop section and those in the rest of the mat; therefore, a vertical sensor is installed near the edge of the drop section.

The foundations of Units 1 and 2 are instrumented as follows (see Figure 1):

	Unit 1	Unit 2
a. Foundation mat (lip, Elev. 89 ft)	3 triaxial	3 biaxial--horizontal and vertical
b. Foundation mat (interior, Elev. 91 ft)	1 uniaxial--vertical	

Also, a triaxial Response Spectrum Recorder and a triaxial Peak Recording Accelerograph (PRA) are installed at Elev. 89 ft. on the Unit 1 Containment foundation mat.

2. <u>Containment Exterior</u> (Unit 1)

The Containment Exterior is a 3.5 ft thick cylindrical shell with a 2.5 ft thick dome (see Figure 2). The response of the shell is monitored to identify the contribution of different modes of response. There are three circumferential (breathing, torsion and beam) and two longitudinal modes which account for most of the response of the exterior shell. These modes are monitored with the following instrumentation scheme (see Figure 1):

a. At springline of dome (Elev. 231 ft)	3 triaxial
b. Top of dome (next to vent, Elev. 305.5 ft)	1 triaxial

3. <u>Containment Interior</u> (Unit 1)

The Containment Interior is made up of a concrete structure, and a steel annular structure topped by a concrete slab. Response is monitored both in translation and in

torsion by the following instrumentation (see Figure 1):

a.	Interior Concrete (Elev. 140 ft)	3 triaxial
b.	Annulus (Elev. 140 ft)	2 biaxial--horizontal and vertical

Also, a PRA is installed at Elev. 140 ft. on the Interior Concrete.

Auxiliary Building

The Auxiliary Building is a stiff box structure housing Class 1 equipment and service areas for both Units 1 and 2. The building is instrumented as follows (see Figure 2):

Foundation (Elev. 60 ft) east end	1 triaxial
Floor slab and partial foundation (Elev. 100 ft), east end	1 triaxial
Floor slab and partial foundation (Elev. 100 ft)	1 triaxial
Floor slab and partial foundation (Elev. 100 ft), north end of Fuel Bldg.	1 triaxial

Also, 3 PRA's are installed at Elev. 140 ft. of the Auxiliary Building.

Turbine Building

The Turbine Building houses some Class 1 equipment. The effects of soil-structure interaction under this building are of interest as the structure is founded on a long rectangular (150 ft x 800 ft) variable thickness mat which could behave non-rigidly. The following instrumentation is provided (see Figure 3):

Foundation mat (Elev. 85 ft), north end	1 triaxial
Foundation mat (Elev. 85 ft), south end	1 triaxial
Floor slab (Elev. 140 ft), north end	1 biaxial--horizontal and vertical

Also, three PRA's are installed in the Turbine Building; one is at Elev. 85 ft, one at Elev. 140 ft, and one in the vital switchgear area at Elev. 119 ft.

FREE FIELD ARRAY

The free field array consists of three triaxial accelerometers located at the following (approximate) azimuths and distances from the center of Unit 1 Containment: 1500 ft NE (near reservoirs); 2400 ft SE (near construction warehouse); 1500 ft SW (near meteorological tower). See Figure 4. These three instruments are sufficient for analysis of free-field motion, to determine wave modes and direction of wave propagation.

One PRA is installed near the 230 kV switchyard control building and one PRA is near the center of the 500 kV switchyard.

RECORDING SYSTEMS

A central recording and playback system is installed in the Control Room for the Basic System and another recording and playback system is part of the Supplementary System. Power supply is provided for all instruments by batteries backed up by a float charger connected to the plant's AC power supply.

Annunication is made, in the Control Room, of maximum acceleration in each of the 3 orthogonal sensors of one of the triaxial instruments on the foundation of Unit 1 Containment. This feature utilizes an Earthquake Force Monitor mounted atop the recording-and-playback cabinet of the Basic System.

REFERENCES

1. ANS-2 Subcommittee, Earthquake Instrumentation Criteria for Nuclear Power Plants, Draft 1, ANSI N18.5-1974 - Revision 1, January 24, 1977.

2. USNRC Regulatory Guide 1.12 For Nuclear Power Plants - Revision 1, April 1974, Instrumentation for Earthquakes.

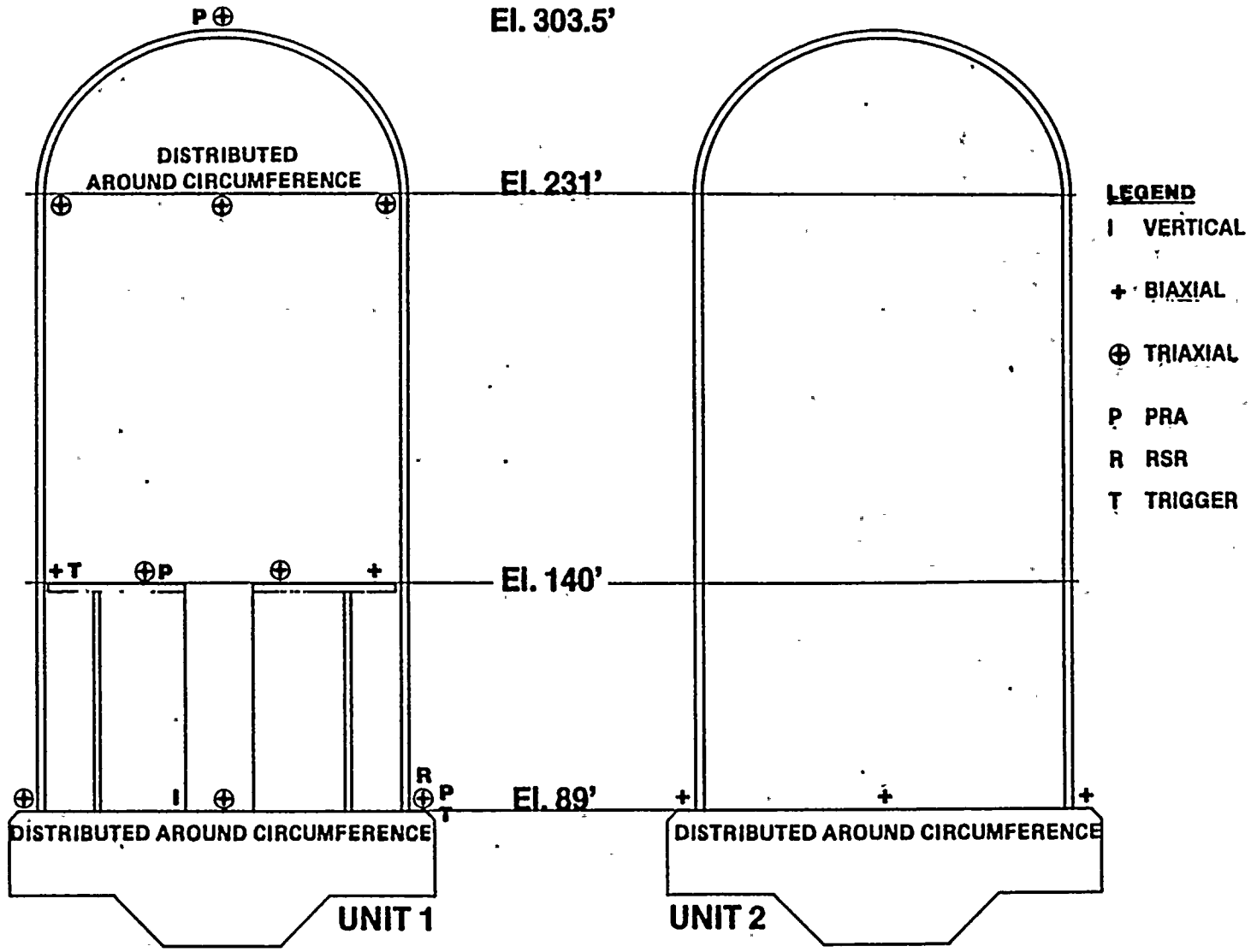

SEISMIC INSTRUMENTATION
CONTAINMENT STRUCTURE
DIABLO CANYON UNITS 1 & 2

FIGURE 1

STEINHARDT

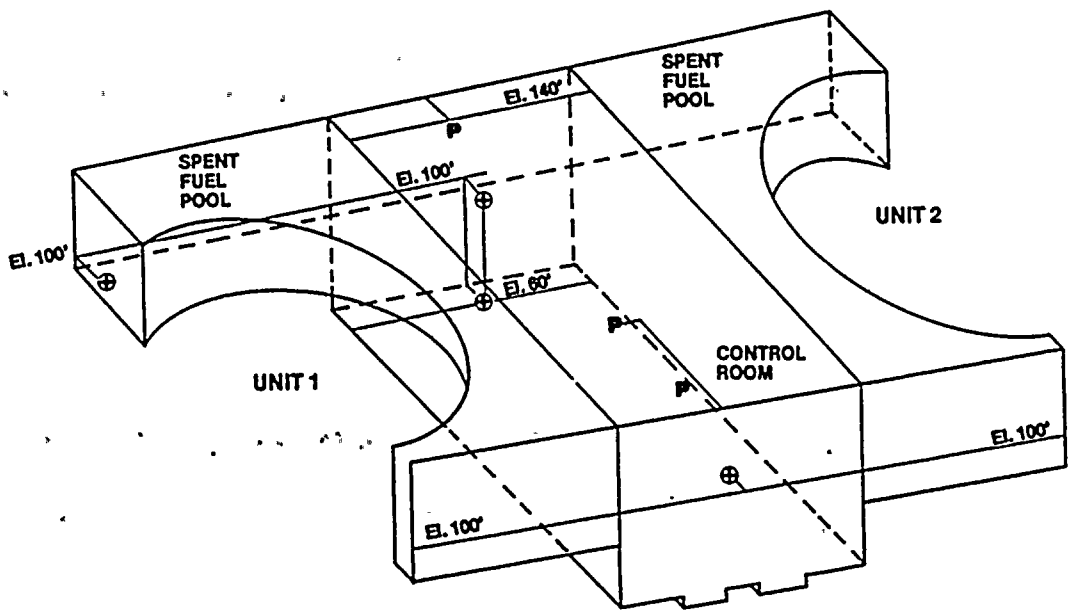

SEISMIC INSTRUMENTATION
AUXILIARY BUILDING
DIABLO CANYON UNITS 1 & 2
FIGURE 2

STEINHARDT

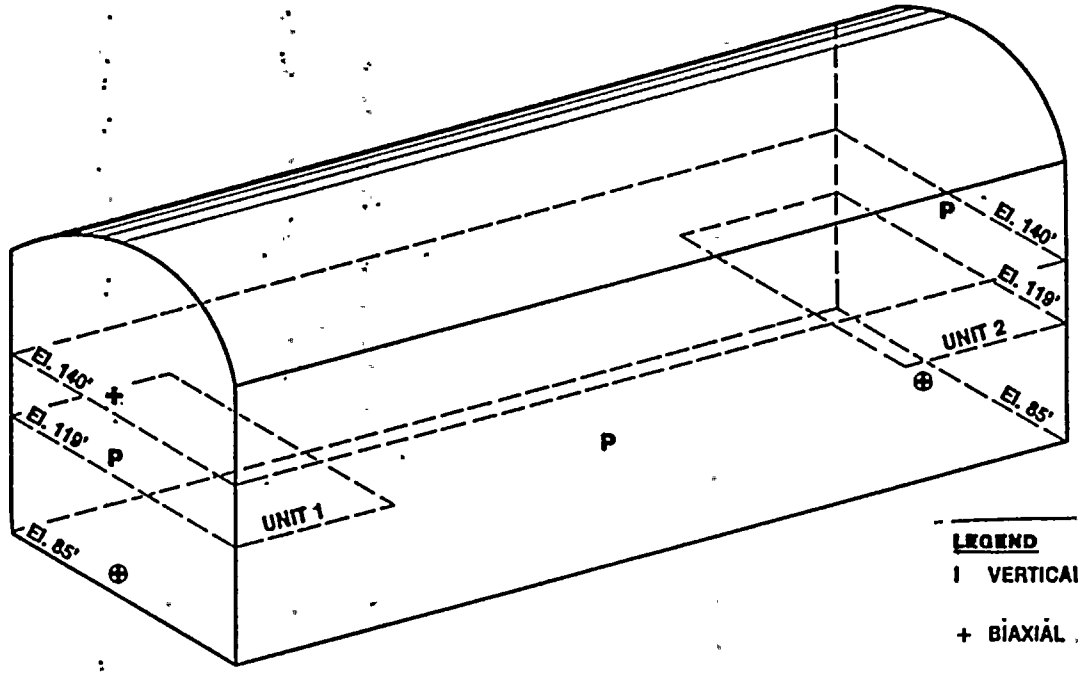

LEGEND

I VERTICAL

+ BIAXIAL

⊕ TRIAXIAL

P PRA

R RSR

T TRIGGER

SEISMIC INSTRUMENTATION
TURBINE BUILDING
DIABLO CANYON UNITS 1 & 2

FIGURE 3

STEINHARDT

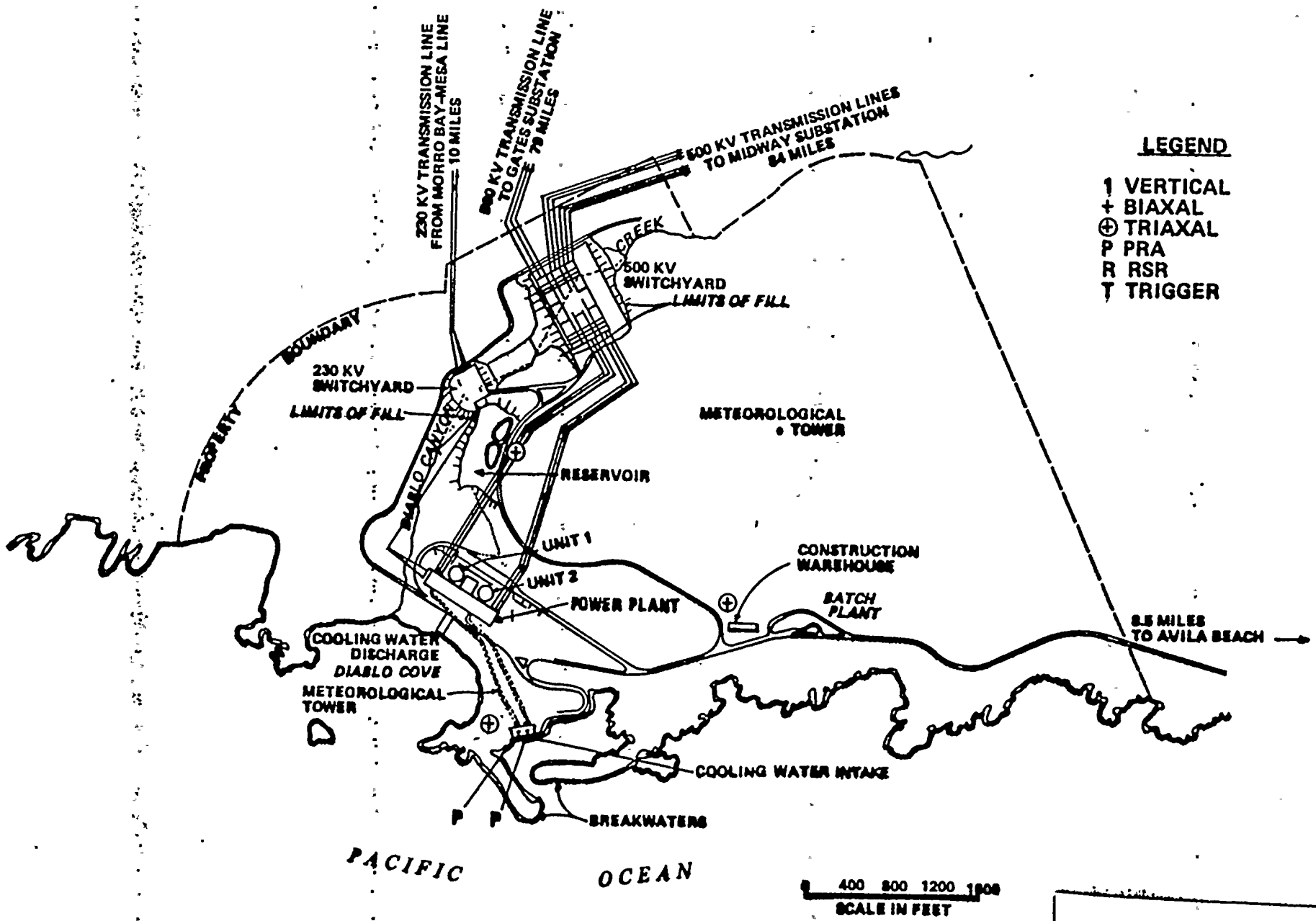

UNITS 1 AND 2
DIABLO CANYON SITE

SEISMIC INSTRUMENTATION

FIGURE 4
STEINHARDT

mpbl

MR. NORTON: We would pass Mr. Steinhardt for cross-examination at this time.

MRS. BOWERS: Mr. Kristovich?

CROSS-EXAMINATION

BY MR. KRISTOVICH:

Q Mr. Steinhardt, is the seismic instrumentation system in accordance with all aspects of Provision one of Reg Guide 1.12?

A In my opinion it satisfies the intent of that Reg Guide.

It's difficult to say exactly whether it's in 100 percent compliance. I believe it's very much in compliance with the letter of the Reg Guide, and totally in compliance with the intent of the Reg Guide.

Q What might the possible exceptions be?

A Well, as I said, it's difficult to determine whether it's completely in compliance because of the way the Reg Guide is worded. It says that you should have this and you must have this, but as a substitute for the one thing you can have something else, and that there should be an instrument directly above another instrument on the containment, and things of that sort.

So question, for instance, is the center of the dome directly above a point on the perimeter of the foundation of the containment? Physically no, but I think the intent is

mpb2

met. And besides that, in the supplemental system, the answer becomes yes.

So it's kind of difficult to give a complete answer.

Q What equipment will be provided to inform the control room operator of the value of the peak acceleration level andthe input response spectra values shortly after occurrence of an earthquake?

A On the base of Unit 1 foundation is a response spectra recorder, which is a vibrating rig type device that enables one quickly to determine the response values represented by the earthquake. It's not instantaneous. But within a matter of an hour or two the interpretation can be made. There is an instantaneous readout available in the control room from the triaxial accelerometer which is adjacent to that response spectra recorder. It appears on the display face of the earthquake force monitor which is mounted at the top of the recording cabinets of the basic system in the control room.

Q What was the basis for establishing values for activating the readout of a seismic instrumentation to notify the control room operators?

A I do not understand the question.

Q Do you want the question reread, or is there a particular part you don't understand?

mpb3

MR. NORTON: Excuse me.

Mr. Steinhardt answered that he didn't understand the question.

MRS. BOWERS: Could you rephrase it, please?

BY MR. KRISTOVICH:

Q Okay.

I'm asking about notification of the control room operator, and I would like to know the basis for establishing values for activating the readout of the seismic instrumentation to notify the control room operator.

A I'm not sure that there is a value in the earthquake force monitor that is a triggering value. It may be that there is one, but it's a low level. It would be comparable to the level which triggers the recording system. Anything greater than approximately one percent g would immediately show up on the earthquake force monitor. It would not be ennunciated -- if the triggering level of the basic system is exceeded, the recording process would start and the ennunciator lights would go on, and the operator would know that all that needs to be done to find out what the peak acceleration up to that moment was would be to take about 20 steps to get to the earthquake force monitor.

Q Okay.

To what extent will the seismic instrumentation be employed to verify the seismic analysis following an

mpb4

earthquake?

A I'm not sure that that's within the scope of my knowledge. I can guess, but --

MR. NORTON: Well, excuse me, Mr. Steinhardt, we don't guess.

I'm not sure I understand the question.

I believe the witness testified that that was one of the reasons for this ACRS request, that that was one of the reasons for it. But it's not within this witness's purview to discuss that. It's more of Dr. Blume, Dr. Stuart Smith, Dr. Frazier questions than it is Mr. Steinhardt.

MRS. BOWERS: Mr. Kristovich, did you hear the comment by Mr. Norton that it's not within this witness's expertise?

Now we've heard, I think, that Dr. Frazier will be back.

MR. NORTON: Yes, but I hate to have him back to put him on the stand to answer that question. Obviously the data would be used -- you know, they'd look at the data and see what it says and review it.

I mean, I don't understand the purpose of the question. I mean when you say To what extent would it be used, which was what the question was, well, it's data. It's used. But, you know, what kind of an earthquake are you talking about? If it's a 3.2 earthquake on the San Andreas

mpb5

system eight miles away, I suspect the data wouldn't be used at all. If it were a 6.2 earthquake on the Hosgri, I suspect the data would be used a great deal.

I don't understand the question. I don't want to call somebody back to answer that question if that's all there is to it.

MRS. BOWERS: You can't listen to two people, right?

MR. KRISTOVICH: Right.

I'm sorry, were you just saying you didn't want Dr. Frazier to come back?

MR. NORTON: Well, I'm not going to ask Dr. Frazier back to put him on the stand to answer one question. Dr. Frazier is going to be here to assist in the cross-examination of Dr. Bruno. But to answer that question it seems to me that that is -- he's describing a system of collecting data. He was asked, you know, to what extent was the data to be used. And it depends on what the data is, I guess.

I mean, I don't know why we would need to call someone back to answer that question.

DR. MARTIN: I can't understand the problem. I can find the answer in the written testimony under Purpose of System. It was installed for a purpose. I assume the data is going to be used to achieve that purpose, isn't it?

mpb6

THE WITNESS: That's correct.

MR. NORTON: Well, the question was to what extent would it be used to achieve that purpose.

DR. MARTIN: I would imagine to the fullest extent.

(Laughter.)

MR. KRISTOVICH: I didn't think it was that type of a question.

I'll move on.

(Laughter.)

BY MR. KRISTOVICH:

Q Okay.

Mr. Steinhardt, what criteria and procedures will be used to compare measured responses of category one structures and selected components in the event of an earthquake with the results as predicted by the seismic system and subsystem design analyses?

MR. NORTON: May we have the question reread? I believe you're reading it from a pad. Could you reread it instead of making her go back, and go a little bit slower. I didn't catch it all.

MR. KRISTOVICH: Sure.

BYA MR. KRISTOVICH:

Q What criteria and procedures will be used to compare measured responses of category one structures and

mpb7

selected components in the event of an earthquake with the results as predicted by the seismic system and subsystem design analyses?

MR. NORTON: Object.

That's outside Mr. Steinhardt's expertise.

BY MR. KRISTOVICH:

Q Is that outside your expertise?

A It's at least partially outside my expertise. It's certainly outside the area of my direct knowledge.

MR. KRISTOVICH: Did you want to rule on that, or....

MRS. BOWERS: Well, I think the objection is sustained. I think the witness verified that.

BY MR. KRISTOVICH:

Q Okay.

Mr. Steinhardt, how did the system function during and following the August 1978 Santa Barbara earthquake?

A The supplementary system of course is not yet functioning. The recording cabinet was received at the site yesterday.

However, the basic system has been in apparently good working condition for several years, but has never been triggered by any seismic event, including the one you just alluded to.

mpb8

Q Why was it not triggered by the Santa Barbara earthquake?

A I can answer that question, I suppose. Because the source of the earthquake was too far away for the -- the earthquake was small enough so that the distance was too great for it to be felt at the plant.

MR. KRISTOVICH: No further questions.

MRS. BOWERS: Mr. Ketchen?

MR. KETCHEN: No questions, Mrs. Bowers.

EXAMINATION BY THE BOARD

BY MR. BRIGHT:

Q Mr. Steinhardt, the first time we convened here we heard a great deal about mounting instruments in strange places, where they gave you bad results or something like that.

Now it would appear that you have a great number of data collection points and quite a bit of instrumentation. And I guess the question that I think it within your purview is:

Who made the decision as to how to scatter these little rascals around? Were the kind of people that we've been hearing talking about this subject, were they in on it, or did you contract it out to some company, or what?

A The basic system was formulated before I became somehow responsible for strong motion instruments at

mpb9

Diablo Canyon.

But the choice of locations was somewhat comparable to what I'm about to describe.

When it was decided that the supplementary system should be installed URS Blume was asked to provide PG&E's civil engineering department with advice. Telephone calls were made to some of our other consultants, such as Dr. Stuart Smith, and a couple of others. The final decisions were made in conference with me and Dr. Jhaveri and Dr. Malik. That is, the semifinal decisions were made.

After that I made a few minor changes based on my own judgment. But the essentials of the system were decided in that way.

nd
MADELON
WRBLOOM
flws

Q So we can feel confident that the actual physical location of the instruments will actually yield us -- and I hate to call it "good data," but data that we would have confidence that it would reflect the true state of affairs?

My problem is I keep going back to this accelerometer that was located on this ridge or something, and there seemed to be a great deal of talk about that.

A Yes.

Q I noticed you have, I think it was a triaxial mounted in the free field above, on a rocky ledge, the intake structure. And then you have two little PRAs down at the intake structure.

A Yes.

Q There may be no analogy, but this is what I am trying to--

A Such considerations were entertained. That particular location on that rocky cliff was given serious thought. The desire was to get something out in that portion of the plant area but far enough away from the buildings. The particular location was selected to be back from the edge of the cliff in a relatively broad part of the ridge, so as not to be susceptible to these strange recordings which would then be subject for arguments.

I feel that due consideration was given to possibilities of having strange results. And I also feel that

WRB/wb2

1 the number of sensors will tend to average things out.

2 In other words, we're definitely not in the

3 situation of having all our eggs in one basket, just one

4 instrument to pick up a recording which may be a peak or may

5 be a valley and may be strange, and may not be.

6 Q Thank you.

7 MR. NORTON: Excuse me, Mrs. Bowers.

8 I don't know quite how to do this, because I'm

9 going to be accused of testifying again. But I'm going to

10 object to Dr. Bright's question. And that's the way I'mgoing

11 to get to say what I want to say.

12 (Laughter)

13 I think that that question misconstrues the

14 previous testimony. And I think it is important-- it's

15 important for my understanding of this case, anyway, to have

16 that clarified. And I think for the Board's, too. And that

17 is that the testimony about the weird peak that was talked

18 about, and the motion -- that was the Pacoima Dam record,

19 located on top of this little pinnacle of rock. I don't

20 think the testimony was that that was not a true recording.

21 That instrument did in fact record that measure. but what

22 it was was a false impression that that's what the g was

23 from that earthquake all over. I think that's where the

24 testimony--

25 MR. KETCHEN: Mrs. Bowers,--

WRB/wb3

1 MR. NORTON: I'm objecting because I think the
2 question assumes a fact not in evidence, and I'm stating
3 what I construe the testimony to be. And I'm not testifying.
4 But I think the way the question was posed to this witness,
5 who wasn't here for that testimony and didn't hear that, it
6 could be misleading to the witness because he didn't hear
7 the testimony that you and I heard regarding that record.
8 And I think the distinction is that any instrument will
9 record what that instrument sees at that spot. That's not
10 to say that you'll get that acceleration ten feet away
11 or twenty feet away or a hundred yards away. And I think
12 that's what the witnesses were saying, that you can't take a
13 unique record like that an apply it universally; you have
14 to look at it and see why you got that peculiar spike.
15 So that's the basis of my objection.
16 MR. BRIGHT: Well, Mr. Norton, I was not trying
17 to say that that was a weird leftfield sort of recording.
18 I'm sure that it recorded what happened where the instrument
19 was. But I think what I heard -- and I'm sure it could be
20 dug out of the testimony, if necessary -- was that this was
21 not representative of what we were actually trying to look at.
22 And therefore I was merely asking Mr. Steinhardt if they had
23 considered this sort of thing.
24 MR. NORTON: Okay.
25 MR. BRIGHT: --when installing the instrumentation.

WRB/wb4

MR. NORTON: It was perhaps the wording of your question. I wasn't sure that you and I were on the same wavelength. We are now when I hear what you say, but I wasn't when I first heard the question.

MR. BRIGHT: We non-legals have a problem in framing questions.

MR. NORTON: So do we legals.

MRS. BOWERS: Does the objection stand?

MR. NORTON: I guess I'll withdraw it.

THE WITNESS: May I speak, Mr. Norton?

MR. NORTON: I don't think there's a question, Mr. Steinhardt. No.

MR. KETCHEN: Mrs. Bowers, may we then understand that Mr. Norton's comments, or his argument as to how he individually, as representative of PG&E, views what the record itself says-- I don't know how to object to it, or to what Mr. Norton said, or to cross-examine Mr. Norton or anything of that sort. But I think I'd like to see the record say that there is an objection to this type of procedure. I think there is an appropriate method of clarifying this and that's on redirect examination.

I hate to see the record messed up. But I'm not sure that the approach taken is the proper way to clarify it.

MR. NORTON: I think, Mr. Ketchen, you're messing up the record. Because I have the right to object to any

WRB/wb5

1 question whether it's by a Board member or other counsel.

2 Now if there had been another counsel I would

3 have objected immediately, and I would have said the same

4 thing .

5 MR. KETCHEN: There's no question about your

6 right to object. But there are bases for objection, and

7 characterization of the record may not be one of those.

8 MR. NORTON: Well I suggest you check your rules

9 of evidence. Because the-- And I will address the Chairman:

10 I suggest Mr. Ketchen check his rules of evidence

11 and he'll find that an objection for misstatement of prior

12 testimony is certainly a basis for an objection.

13 MRS. BOWERS: Well the record, of course, will

14 speak for itself. And in these hearings there's a peculiar

15 problem in the fact that all witnesses are not present at all

16 times. And I think Mr. Bright didn't fully explain his

17 recall of the testimony, sort of assuming this witness was

18 familiar with it.

19 We agree that you certainly have a right to

20 object to Board questions. You might give the Board a chance

21 to explain, however.

22 (Laughter)

23 MR. NORTON: I did.

24 THE WITNESS: I think it might be helpful--

25 MR. NORTON: No, Mr. Steinhardt.

WRB/wb6

(Laughter)

MRS. BOWERS: Mr. Bright would like to withdraw the question.

MR. KRISTOVICH: I'll ask it.

BY DR. MARTIN:

Q How does this system of instrumentation differ from instruments, or use of instruments that would be installed at a seismological observatory?

A The typical instrument at a seismological observatory is not a strong motion accelerometer sort of defice. It's typically a highly sensitive instrument intended primary to pick up weak incoming signals, weak either because the event is small or because it's distant. And such seismographs typically go off scale if a seismic event of any considerable magnitude occurs fairly near the observatory.

These instruments are at the other end of the spectrum of sensitivity. They are deliberately made much less sensitive so that they will not go off scale. But, of course, they are just sensitive enough so that a good and useful record for engineering purposes, rather than for scientific purposes, will be acquired.

Q Do you have any instruments installed at Diablo that are of equivalent sensitivity?

A Equivalent to what?

Q Equivalent to what you would put at an observatory?

WRB/wb7

A No. We rely-- We, the engineering profession, rely on observatories at Berkeley, at Pasadena -- Cal Tech at Pasadena, at the stations put up by the U.S. Geological Survey. It's not necessary to have a highly sensitive instrument in the vicinity of the Hosgri Fault, for instance. It is desirable to have several that are close enough to pick up a record. But it doesn't have to be just three miles away.

Q I'll keep at it for a while.

Is there any instrument at Diablo Canyon which would have detected the recent earthquake in southern California, if it had been turned on?

A No. The triggering level of the basic system is at approximately 1 percent g. I don't know exactly the triggering -- the lower limit of sensitivity at seismological observatories, but it is much lower than 1 percent g. But 1 percent g is much below what most human beings would feel if they were subjected to that acceleration.

So the instruments are sensitive enough for engineering purposes but not for seismological studies.

Q All right.

So then your instruments aren't placed, or designed, to determine such things as the epicenter of an earthquake or its magnitude at some distance; is that a correct statement; that you are more interested in knowing what kind of motion

1 occurs on the structure?

2 A A reason for purchasing the more expensive and

3 more sophisticated gain ranging system was to enable this

4 installation to do what most comparable installations do not

5 do, and that is record earthquakes which are virtually in-

6 significant except for scientific purposes. And so it's

7 quite possible that such earthquakes would be captured on

8 tape by this system. The triggering level can be set low

9 enough for the supplementary system so that an earthquake

10 which is almost not felt could nevertheless be recorded.

11 MR. NORTON: I don't believe Mr. Steinhardt

12 answered Dr. Martin's question, though. And that was: the

13 purpose of the instruments was to measure acceleration

14 or to measure magnitudes of earthquakes, or epicenters?

15 THE WITNESS: I believe there are methods for

16 inferring the magnitude of an earthquake from the type of

17 record that could be picked up by the system at Diablo Canyon.

18 BY DR. MARTIN:

19 Q All right. I'll try another tack.

20 You list in your written testimony the purpose of

21 installing the supplemental system, you give a purpose for

22 installing the basic system. I assume the system was designed

23 to achieve those purposes.

24 Now Dr. Bright's question went to an instrument

25 that was installed for a different purpose.

WRB/wb9

A I don't believe that's true.

The answer to your first question is Yes. The answer to your second implied question is, I believe that's not true. I believe I understood Dr. Bright's question. I believe I was responsive to it.

Q Okay.

A I believe I understood the background of the question, even though I didn't hear the testimony that it referred to.

Q All right. Instead of muddying the water any more I'm going to stop asking questions.

(Laughter)

BY MRS. BOWERS:

Q I don't believe you were here, Mr. Steinhardt, when we had a discussion at the beginning of this segment of the hearing and I put the parties on notice that I had been reading Dr. Bruce Bolt's new little paperback on earthquakes over the Christmas holidays. And, because there were prior references to it, it was decided that it should be marked for identification. And PG&E volunteered to donate three copies for the record.

MRS. BOWERS: Has that been done?

MR. NORTON: They'll be here tomorrow morning. We had to go out and buy them.

MRS. BOWERS: Fine.

WRB/wb10

THE WITNESS: And I was present.

MRS. BOWERS: Oh, were you?

BY MRS. BOWERS:

Q Anyway, in this little book -- I don't know whether I can find it right now. But in Japan they've been experimenting with the idea of putting sensors -- well, I think they used the figure of 200 kilometers -- out on the ocean floor. And then there are sensors that take it up to the land where they can be recorded.

Did PG&E consider putting any kind of a sensor on top of the Hosgri Fault?

A Yes, we did consider it. We considered many things as a result of the interest expressed by the Advisory Committee.

The system that we decided to purchase has the initial cost of $120,000 approximately. By the time it's installed and operating the total cost will come to about $200,000. The annual maintenance cost is undetermined, but will be a fair number of thousands of dollars.

There had to be a limit. An underwater sensor properly installed and maintained is extremely expensive. Even land-based stations. And this was one of the things that was considered. Land-based stations of the type that Dr. Martin referred to, or was implying at least, that would be expensive. So just because there had to be a limit we did not go quite that far.

2C wrb/agbl

Q Well I know the diagram shows a boat directly above it, so I would assume there would have to be a boat.

A A tethered buoy, pezhaps. There are other ways.

2190

Q Well I'm not sure whether this is within your area or not, but if it was determined that that should be done, what kind -- I mean, it's so close compared to the 200 kilometers that was considered in the Japanese theory. Would there be a value of having something directly on the fault would you get information -- more information, or information more quickly than the various sensors in and around the facility?

A I can give opinions. For the scientific world, the answer is clearly yes, it would be extremely valuable if the Hosgri Fault ever moves.

In the opinion of PG&E, corporately and myself personally, we may never get any signal of any sort from the Hosgri Fault, any signal of significance.

But if it did, yes, for scientific purposes it would be extremely useful. Whether it would be necessary to have such data in order to determine the effect of such an event on the plant or not is not so clear. I would guess that it would not be necessary.

Q Well does the close proximity have significance here, because we're talking about 2.5 miles, 3 miles, something like that for the Hosgri Fault.

wrb/agb2

A Dr. Blume could answer this better. I think I can make a decent answer.

The engineering fraternity very much wants to have good records of strong and fairly strong earthquakes close to the source. I don't believe it is necessary or particularly valuable to be right on top of the source. Two or three kilometers, even three miles is better than most of the close in strong data that we have.

There's a widespread opinion that the variations of response at ground surface near the fault do not vary directly so that right over the fault you get a strong peak. And so it seem that anywhere near the fault, as long as it is near the fault, is good enough to give useful engineering information.

MRS. BOWERS: Well the Board has no further questions.

Mr. Norton?

MR. NORTON: We have no further questions.

MRS. BOWERS: Mr. Kristovich?

MR. KRISTOVICH: No further questions.

MRS. BOWERS: Mr. Ketchen?

MR. KETCHEN: No further questions.

MRS. BOWERS: Well may the witness be excused?

MR. NORTON: Yes.

MRS. BOWERS: Thank you very much. I would like

wrb/agb3

to have comment from the other parties, if you don't mind, this is a democracy.

Mr. Kristovich, any objection to this witness being excused?

MR. KRISTOVICH: No objection.

MRS. BOWERS: Mr. Ketchen?

MR. KETCHEN: No objection.

MRS. BOWERS: Well the witness will be excused.

(The witness excused.)

Well it's almost time for Dr. Martin's ding-dong to ding-dong, so I suggest we recess and begin at 8:30 in the morning.

(Whereupon, at 4:55 p.m., the hearing in the above-entitled matter was recessed, to reconvene at 8:30 a.m., the following day.)