NUREG/CP-0016

NUREG/CP-0016

NUCLEAR WASTE MANAGEMENT LIBRARY

Proceedings of the U.S. Nuclear Regulatory Commission

Meeting on Reactor Vessel Liquid Level Measurement

Held at
National Bureau of Standards
Gaithersburg, Maryland
October 30, 1980

SANDIA NATIONAL LABORATORIES
823 LIBRARY, MS-0731
P. O. BOX 5800
ALBUQUERQUE, NM 87185-0731

U.S. Nuclear Regulatory Commission

Office of Nuclear Regulatory Research

Edited by N. N. Kondic

The views expressed in these proceedings are not necessarily those of the U. S. Nuclear Regulatory Commission.

The submitted manuscript has been authored by a contractor of the U.S. Government under contract. Accordingly the U.S. Government retains a nonexclusive, royalty-free license to publish or reproduce the published form of this contribution, or allow others to do so, for U.S. Government purposes.

Available from

GPO Sales Program
Division of Technical Information and Document Control
U.S. Nuclear Regulatory Commission
Washington, DC 20555

Printed copy price: $5.50

and

National Technical Information Service
Springfield, VA 22161

NUREG/CP-0016

Proceedings of the U.S. Nuclear Regulatory Commission

Meeting on Reactor Vessel Liquid Level Measurement

Held at
National Bureau of Standards
Gaithersburg, Maryland
October 30, 1980

Manuscript Completed: December 1980
Date Published: January 1981

Edited by N. N. Kondic

Division of Reactor Safety Research
Office of Nuclear Regulatory Research
U.S. Nuclear Regulatory Commission
Washington, D.C. 20555

ABSTRACT

G. D. McPherson, NRC

The Three-Mile-Island accident focused attention on the importance of monitoring liquid inventory within the reactor vessel of nuclear power plants. Subsequently, the NRC issued a requirement that all commercial plants be equipped with some means of measuring this parameter by January 1982.

By NRC invitation, representatives of national laboratories, universities and industry met to discuss various techniques of liquid level and liquid inventory measurement which might be amenable to the operating conditions of PWR plants. The proceedings of this meeting, contained in this report, represent a state-of-the-art review of this subject. This review now serves as a framework for detailed feasibility studies and proof tests of techniques for measuring reactor vessel liquid inventory.

CONTENTS

G. McPherson, NRC: Abstract.....iii

Y. Hsu, NRC: Foreword.....iv

N. Kondic, NRC: Rector Vessel Liquid Measurement Approaches-Survey.....1

P. Griffith, MIT: Overall Comments.....10

D. Hanson, EG&G Idaho: LOFT Work and Potentials at INEL (four section)...13

J. Wolf, EG&G Idaho: Advanced Instrumentation Work and Potentials at INEL.71

W. Jester and others, Penn. State Univ.: Non-Invasive Gauge Proposal.....75

A Raptis, ANL: On Acoustic Techniques.....91

S. Banerjee, Univ. of CA: Ultrasonic Ranging System Proposal.....95

P. Kehler, ANL: Measurement Using Nuclear Techniques.....115

V. Orphan, S.A.I.: Neutron Thermalization Gauge.....117

R. Duffey, EPRI: Non-Invasive Neutronic Monitor.....127

J. Lawless, DAVCO: Microwave Liquid Level Gauge.....137

Appendix: R. L. Anderson, Oak Ridge National Laboratory: State of the Art for In-Vessel Liquid Level Measurement.....A-1

FOREWORD

Y. Y. Hsu, NRC

This report is a compilation of descriptions of features of various proposed non-intrusive methods to measure the coolant inventory in a reactor vessel.

From PWR accident studies, especially after the TMI accident, it is evident that there is a need for some monitoring device which can provide reliable and unambigouous information as to the amount of coolant which is available for core cooling. Many techniques and methods were considered and several of them proposed as serious candidates. Some were direct methods and some indirect; certain approaches were intrusive and others non-intrusive. The research staff of the NRC Division of Water Reactor Safety has formulated a set of guidelines and criteria in terms of unambiguity, longevity, reliability, retrofit ability, etc. Many proposed methods were reviewed against the selection criteria and a few, which are considered promising, have been chosen for further testing and evaluation of effectiveness and feasibility.

There is one class of methods, making use of neutron or gamma radiation, which was repeatedly proposed by several organizations in one variation or another. It is the feeling of the RSR instrumetation staff that, due to the strong interest expressed by the nuclear community in this class of methods, review meeting should be held, so that proponents of each method can present their cases to a group of experts for a peer review, during which pro's and con's of each measurement approach could be openly discussed. Such a meeting was held on October 30, 1980, at NBS/Gaithersburg, Maryland, in conjunction with the 8th WRSR Information Meeting. The methods outlined encompassed a larger field than nuclear radiation application. Main approaches were:

1. Existing in-reactor instrumentation
2. Instrumentation which can use existing access tubes to the core
3. External neutron detectors
4. Micro-wave/Radar devices
5. Sonic/ultrasonic methods

The proceedings contain the authors contributions at the reactor level measurement review meeting. The original form of presentations was largely preserved, with minor additions and modifications for clarity and uniformity.

It should be noted that the meeting was conducted as a non-binding technical discussion. Any statements and comments made in this report should be considered as inoffical technical opionions of the review meeting participants, and should be construed neither as officially supported and endorsed nor rebutted by the NRC.

REACTOR VESSEL LIQUID LEVEL MEASUREMENT APPROACHES — SURVEY

N. N. Kondic, NRC

AMONG SEVERAL POSSIBLE DEFINITIONS, TWO OF THEM PERTAIN MOST CLOSELY TO THE PHYSICAL SITUATION WITHIN THE VESSEL:

(1) GOOD HEAT TRANSFER LEVEL (GHTL)

IT IS ESTABLISHED BELOW GAS-ONLY (DRY-STEAM) VOLUME: IT IS EITHER WITHIN THE TWO-PHASE MIXTURE (IF ANY) OR IT IS EXACTLY AT THE QUIESCENT WATER LEVEL (IF ANY). THE LATTER GENERALLY EXCLUDES A TWO-PHASE MIXTURE ABOVE IT. A CONVENTIONAL, STANDARD CRITERION FOR THE GHTL IN THE MIXTURE CAN BE NUMERICALLY DEFINED, E.G. AS THE LEVEL WHERE A HEAT TRANSFER COEFFICIENT $h = \frac{1}{2} h_{max}$ GOVERNS THE HEAT TRANSFER (OR USE ϕ, HEAT FLUXES, IF AT SATURATION); h_{max} and ϕ_{max} WOULD BE THE MAXIMUM ACHIEVABLE VALUES AT PREVAILING (OR PWR NOMINAL) CONDITIONS. THESE CONDITIONS WOULD INVOLVE PRESSURE, FLUID AND CLADDING TEMPERATURE ETC.

(2) COLLAPSED, OR COMPRESSED, INTEGRATED DENSITY LEVEL (CIDL)

THIS LEVEL ASSUMES A COMPLETE ABSENCE OF GAS (STEAM) BUBBLES IN THE LIQUID AND AN ABSENCE OF LIQUID (IN ANY FORM) WITHIN THE GAS VOLUME, AS WELL AS LIQUID/GAS (STEAM) THERMAL AND MECHANICAL EQUILIBRIUM. TOTAL HYDROSTATIC HEAD (OR DENSITY INTEGRAL), WITH THE KNOWN SATURATION PRESSURE AND DATA ON THE FLUID MOVEMENT, RESULTS IN A SINGLE VALUE FOR THE LIQUID/STEAM INTERFACE LOCATION (ELEVATION).

FROM ABOVE GIVEN DEFINITIONS, IT EMERGES THAT IN VERY SPECIAL CASES TWO LEVELS, GHTL AND CIDL COINCIDE INTO ONE.

R E M A R K S:

A. THERE IS NO GENERAL CORRELATION BETWEEN LEVELS GHTL AND CIDL; ANY CALIBRATION LINKING THESE TWO LEVELS DEPENDS ON NUMEROUS PARAMETERS AND CANNOT BE GENERALIZED FOR DIFFERENT SYSTEMS AND DIFFERENT STATES OF ONE SYSTEM.

B. BESIDE HEATED T/C'S, GHTL CAN BE ALSO DETERMINED (OR ASSESSED) BY INSTRUMENTS WHICH: I. ARE SENSITIVE TO LOCAL DENSITY (VOID FRACTION), SUCH AS GAMMA- AND NEUTRON LOCAL FLUX PROBES, OR II. DISPLAY PLOTS OF DENSITY DISTRIBUTION ALONG THE VESSEL HEIGHT, SUCH AS THE MICRO-WAVE (RADAR) LEVEL DETECTOR.

REQUIREMENTS FOR THE REACTOR VESSEL LEVEL METER

A. COMPULSORY

1. ANY METER AND ASSOCIATED SYSTEMS MUST NOT ENDANGER REACTOR VESSEL AND PIPING INTEGRITY, NOR CAUSE UNACCEPTABLE LOADS, VIBRATIONS, ELECTRO-MAGNETIC FIELDS, RADIATION AND SOUNDS TO INTERFERE WITH OPERATION OF THE POWER GENERATING AND OTHER (MEASURING CONTROL, ETC.) SYSTEMS. IN PARTICULAR, PRESSURE BOUNDARY AND RADIOACTIVITY CONTAMINATION CRITERIA CANNOT BE COMPROMISED.

2. IT MUST FUNCTION WITHIN UPPER PLENUM AND REACTOR CORE HEIGHTS, WITHOUT A NEED TO CHANGE THE RANGE, WHICH MUST ACCOMODATE ALL PHYSICALLY POSSIBLE SITUATIONS.

3. INSTRUMENT SIGNALS TO BE PROCESSED IN A SIMPLE, STRAIGHT-FORWARD WAY.

4. INSTRUMENT SIGNALS AND THE PROCESSED ONES TO BE UNAMBIGUOUS, EASY TO READ AND UNDERSTAND, AND UNAFFECTED BY VESSEL ENVIRONMENT CONDITIONS (DOWNCOMER LEVEL, BORON, CONTROL RODS, THERMAL CYCLING, CORROSION, EROSION, RADIATION FLUENCE, VIBRATIONS.)

5. MAXIMAL LIFETIME (EXCHANGE, REPLACEMENT PERIOD) AND LONG INTERVALS OF INSPECTION, SERVICING, ADJUSTMENT, ETC. (EQUAL OR LONGER THAN THE REFUELING INTERNAL).

6. HIGH RELIABILITY, BUT A CLEAR INDICATION IF THE INSTRUMENT FAILS OR ERRORS INCREASE.

7. INSTRUMENT CALIBRATION MUST BE POSSIBLE TO RENDER AN ACCEPTABLE TOLERANCE (WITH A KNOWN ERROR BAND) IN READING OF LIQUID LEVEL; SUGGESTED MAXIMUM: 1/10 OF THE CORE HEIGHT.

8. THE LEVEL-METER CHOSEN IN FINAL REVIEW, MUST BE ABLE TO BE LINKED TO ONE OR MORE INSTRUMENTS OR SYSTEMS IN ORDER TO ACCOMPLISH FUNCTIONAL REDUNDANCY (E.G., A LINK TO THE SATURATION OR SUBCOOLED METER).

9. FOR THE LEVEL-METER OF THE FINAL CHOICE, AN EVENT-TREE AND A FAULT-TREE ANALYSIS MUST BE COMPLETED, REGARDING ITS OWN FUNCTION AND ITS LINK WITH THE DISPLAY, AS WELL AS IN RELATION TO ITS POSSIBLE CONNECTION TO ALARM SIGNALING DEVICES.

B. DESIRED

1. LEVEL-METER CAN BE APPLIED TO AN OPERATING REACTOR AND A SCRAMMED ONE, WITHOUT THE NEED TO CHANGE THE RANGE, SWITCH SENSORS, ETC.

2. INSTRUMENT COMPONENTS FOR THE LEVEL-METER ASSEMBLY ARE *OFF-THE-SHELF* AVAILABLE, OR MINIMALLY CUSTOMIZED, OR THEIR DEVELOPMENT REQUIRES A *SHORT* LEAD TIME AND THEY HAVE TO BASED ON PROVEN PRINCIPLES AND MODELS.

3. PROCESSING OF THE ORIGNAL SIGNAL FROM THE SENSOR SHOULD NOT INCLUDE SOPHISTICATED (PERHAPS NONE AT ALL) LOGIC WITH DECISION-MAKING CIRCUITRY, BECAUSE:

(I) THE LOGIC CAN FAIL, OR

(II) MICROPROCESSORS AND DEDICATED COMPUTERS, THEIR CONNECTIONS, ENERGY SOURCES, ETC., CAN BE DAMAGED OR INCAPACITED DURING THE ACCIDENT (E.G., HIGH TEMPERATURE AND HUMIDITY EFFECTS); ON-LINE DATA PROCESSING IS DESIRED, BUT FOR BACK-UP PURPOSES, AN EASY ACCESS FOR OPREATOR DATA RETRIEVAL AND MANUAL (DESK-CALCULATOR) ANALYSIS OR INTERPRETATION HAS TO BE PROVIDED.

4. THE NUMBER OF LEVEL-METER AUXILIARY CONNECTIONS, E.G., HEATING POWER, COOLING SUPPLY, CONTROL AND CHECKING CIRCUITRY, ETC., SHOULD BE MINIMIZED.

5. IN REGARD TO ADDITIONAL REACTOR VESSEL PENETRATION:

5.1 THE USE OF INSTRUMENT/PROCESS TUBES IS PREFERRED.

5.2 A MAXIMUM OF ONE ADDITIONAL VESSEL PENETRATION SHOULD BE MADE WITH MINIMAL DIAMETER.

5.3 IF UNAVOIDABLE, VESSEL PENETRATIONS (IN THE HEAD OR BOTTOM ONLY) SHOULD COMPLY WITH THE FOLLOWING PRIORITY SEQUENCE:

- ELECTRICAL
- PIPE (OF STEEL)
- NON-STEEL WINDOW (METALLIC)
- NON-METALLIC WINDOW

REACTOR CORE LIQUID LEVEL MEASUREMENT PROPOSALS

COMMON GEOM. FEATURE	METHOD (NAME)	DRAWBACK/DISADVANTAGE
A. NON-INTRUSIVE		
AT THE REACTOR VESSEL OUTER SURFACE	1. n-FLUX AT TOP/BOTTOM	SMALL COUNTRATE, EFFECT OF GEOMETRY, SIZE, NEUTRON STREAMING, WATER TEMP. AND BORON CONCENTR; DIFFICULT CALIBR.
B. SEMI-INTRUSIVE		
FAR FROM THE CORE OF THE REACTOR	2. DP*	DANGER OF LEAKAGE/SMALL BREAK (QUICK RELIABLE ISOLATION PROBLEM); ZERO-SET DRIFT (CALIBRATION PROBLEM); FLASHING WITH DEPRESSURIZATION; INFLUENCE OF TEMPERATURE AND FRICTION DP.
	NOTE: IF THE VESSEL DOES NOT HAVE A LOWER (BOTTOM) HOLE, TWO UPPER HOLES AND A RECIRCULATION OF THE WATER IN INSTRUMENT LINES CAN ALLEVIATE THE PENETRATION PROBLEM.	
	3. GAMMA-FLUX AT TOP/BOTTOM (UPPER DETECTOR COMPENSATED FOR STEEL RADIAT.)	
WITHIN EXISTING INSTRUMENTATION TUBES	4. LOCAL GAMMA ATTENUATION	PRINCIPLE PROVEN: PROPOSED ARRANGEMENT TO BE CHECKED
	5. LOCAL n-DIFFUSION	
	6. EXISTING or SLIGHTLY MODIFIED IN-CORE DETECTORS: SPND, ION CHAMBERS, TIP'S	READINGS MAY BE AMBIGUOUS, INFLUENCED BY NUMEROUS PHENOMENA; CERTAIN BEHAVIOR YET TO BE EXPLAINED
C. INTRUSIVE		
TRANSDUCER, ENERGIZER (SOURCE) FAR FROM REACTOR CORE	7. MICRO-WAVES (RADAR)	NON-METALLIC WINDOW; LONG GUIDE
	8. SOUND, ULTRA-SOUND OR PRESSURE WAVES (FROM TOP OR BOTTOM) USE OF REFLECTION OR STANDING WAVES	ENERGY DISSIPATION IN REACTOR WALL (IF TRANSDUCER OUTSIDE), DISSIPATION DUE TO DIFFUSION AND REFLECTIONS (DIFFICULT COLLIMATION); EFFECT OF IRREGULAR STEAM/WATER INTERFACE; MOUNTING PROBLEMS IF TRANSDUCER INSIDE ON THE BOTTOM OF THE VESSEL.

* COULD BE EASIER TO IMPLEMENT IN THE FOLLOWING VARIATION: IF/WHEN Z. ROUHANI'S PROPOSAL WOULD BE ACCEPTED FOR THE SECOND PRESSURIZER CONNECTION TO THE REACTOR VESSEL (PREFERABLY TO ITS BOTTOM), THEN, THE LEVEL IN THAT CONNECTING TUBE COULD BE MEASURED BY SEVERAL STANDARD TECHNIQUES (ULTRASONIC CLAMP-ON SENSORS, ETC).

REACTOR CORE LIQUID LEVEL MEASUREMENT PROPOSALS — SURVEY (CONT'D)

. . . . . .(INTRUSIVE)

TRANSDUCER (SENSOR) EXTENDS INTO THE CORE REGION

- 9. ELECTRICALLY HEATED T/C
  - 9.1. SINGLE (HEATED OR COOLED) — ELECTRONIC LOGIC/AUTOMATION COMPULSORY; COOLED REQUIRES AUXILIARY LIQ. LOOP
  - 9.2. DOUBLE (HEATED + COOLED) — HEATED LOSES SENSITIVITY AT SATURATION and IS FLOW PATTERN AFFECTED
  - 9.3. TRIPLE (2 HEATED + 1 UNHEATED), I.E. COMBINATION OF HEATED T/C and SUB-COOLED METER — PRINCIPLES PROVEN: PROPSED ARRANGEMENTS TO BE CHECKED
- 10. RADIOACTIVE DECAY (PuO_2, ALPHA) HEATED T/C: DOUBLE or TRIPLE — PRINCIPLES PROVEN: PROPSED ARRANGEMENTS TO BE CHECKED
- 11. TORSIONAL ULTRA-SONIC GUIDE — INCLUDES MOVING PARTS, DEMANDS TWO MODES OF VIBRATION; MOUNTING OF LOWER END STRECHING DEVICE (SPRING) DURING REFUELING DIFFICULT.

==========

2ND GENERATION, NON-STANDARD, EMERGING, POTENTIAL METHODS:

NON-INTRUSIVE

- (A) LIGHT STRAIN-GAUGE: MEASURING VERTICAL ELONGATION OF THE VESSEL
- (B) VESSEL VIBRATION MODE, AMPLITUDE, FREQUENCY AND ACCELERATION MEASUREMENT, INCL. NOISE ANALYSIS. USE OF MECHANICAL OR OPTICAL ACCELEROMETERS ON THE EXTERNAL VESSEL WALL
- (C) CERENKOV LIGHT, INDUCED IN EXTERNAL CONTAINERS WITH WATER; LIGHT INTENSITY REMOTELY MEASURED

INTRUSIVE

- (D) DIFFERENTIAL THERMAL-EXPANSION LONG ANEMOMETER: TWO ADJACENT ELECTRICALLY HEATED RODS (WALL RESISTANCE) PLACED ALONG THE HEIGHT OF THE VESSEL. THEIR RELATIVE THERMAL EXPANSION AND EACH ROD'S TOTAL RESISTANCE (WHICH DEPENDS ON THE IMMERSED LENGTH) MEASURED REMOTELY. THREE ELECTRICAL DATA DEFINE THE LEVEL.

N. N. KONDIC, US NRC/LOFT

OCTOBER 22, 1980

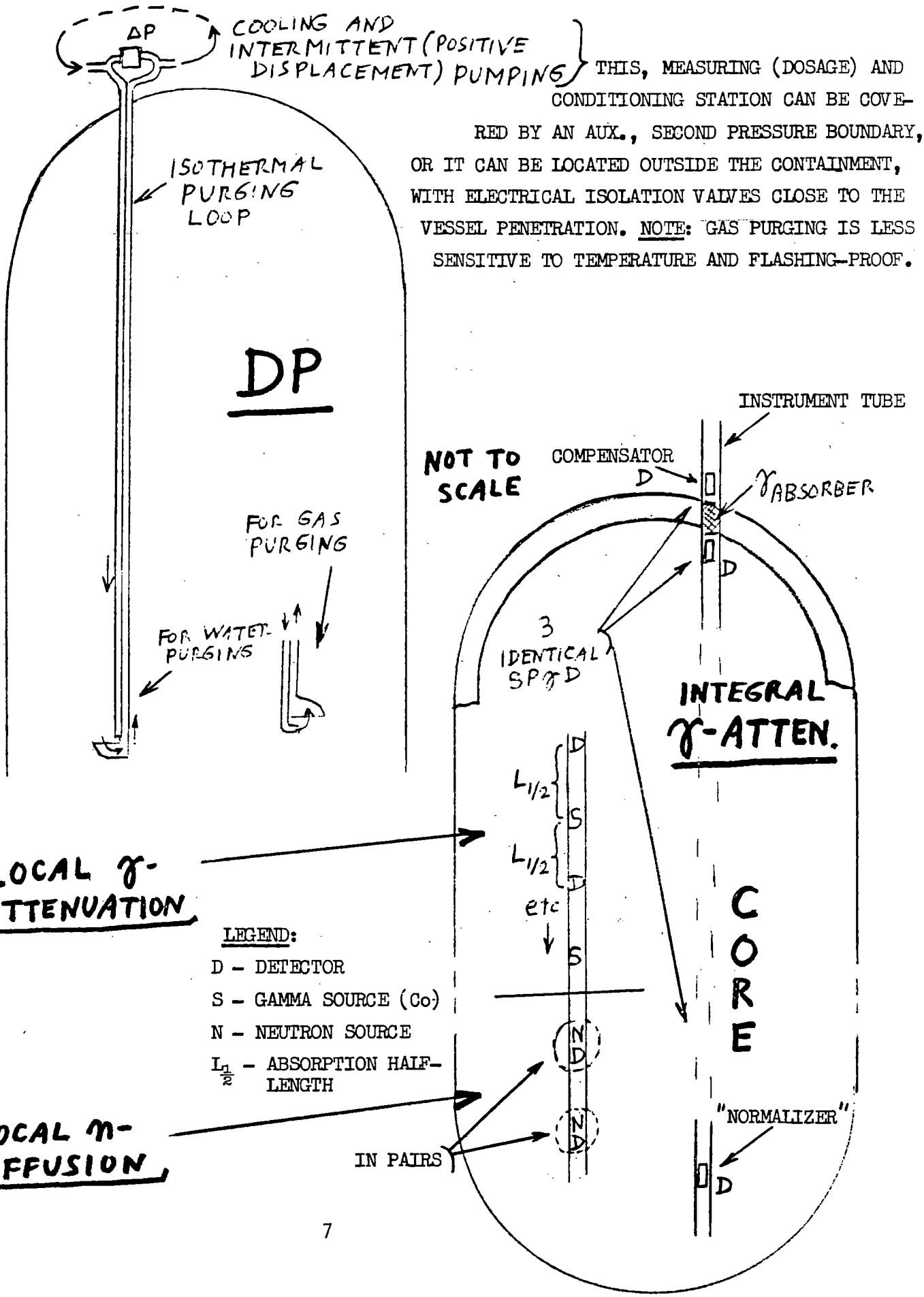
ΔP
COOLING AND INTERMITTENT (POSITIVE DISPLACEMENT) PUMPING
THIS, MEASURING (DOSAGE) AND CONDITIONING STATION CAN BE COVERED BY AN AUX., SECOND PRESSURE BOUNDARY, OR IT CAN BE LOCATED OUTSIDE THE CONTAINMENT, WITH ELECTRICAL ISOLATION VALVES CLOSE TO THE VESSEL PENETRATION. NOTE: GAS PURGING IS LESS SENSITIVE TO TEMPERATURE AND FLASHING-PROOF.
ISOTHERMAL PURGING LOOP
DP
FOR GAS PURGING
FOR WATER PURGING
INSTRUMENT TUBE
NOT TO SCALE
COMPENSATOR
D
γ ABSORBER
D
3 IDENTICAL SPOOLS
INTEGRAL γ-ATTEN.
LOCAL γ-ATTENUATION
D
L1/2
S
L1/2
D
etc
S
N
D
N
D
CORE
LEGEND:
D - DETECTOR
S - GAMMA SOURCE (Co)
N - NEUTRON SOURCE
L1/2 - ABSORPTION HALF-LENGTH
LOCAL n-DIFFUSION
IN PAIRS
"NORMALIZER"
D

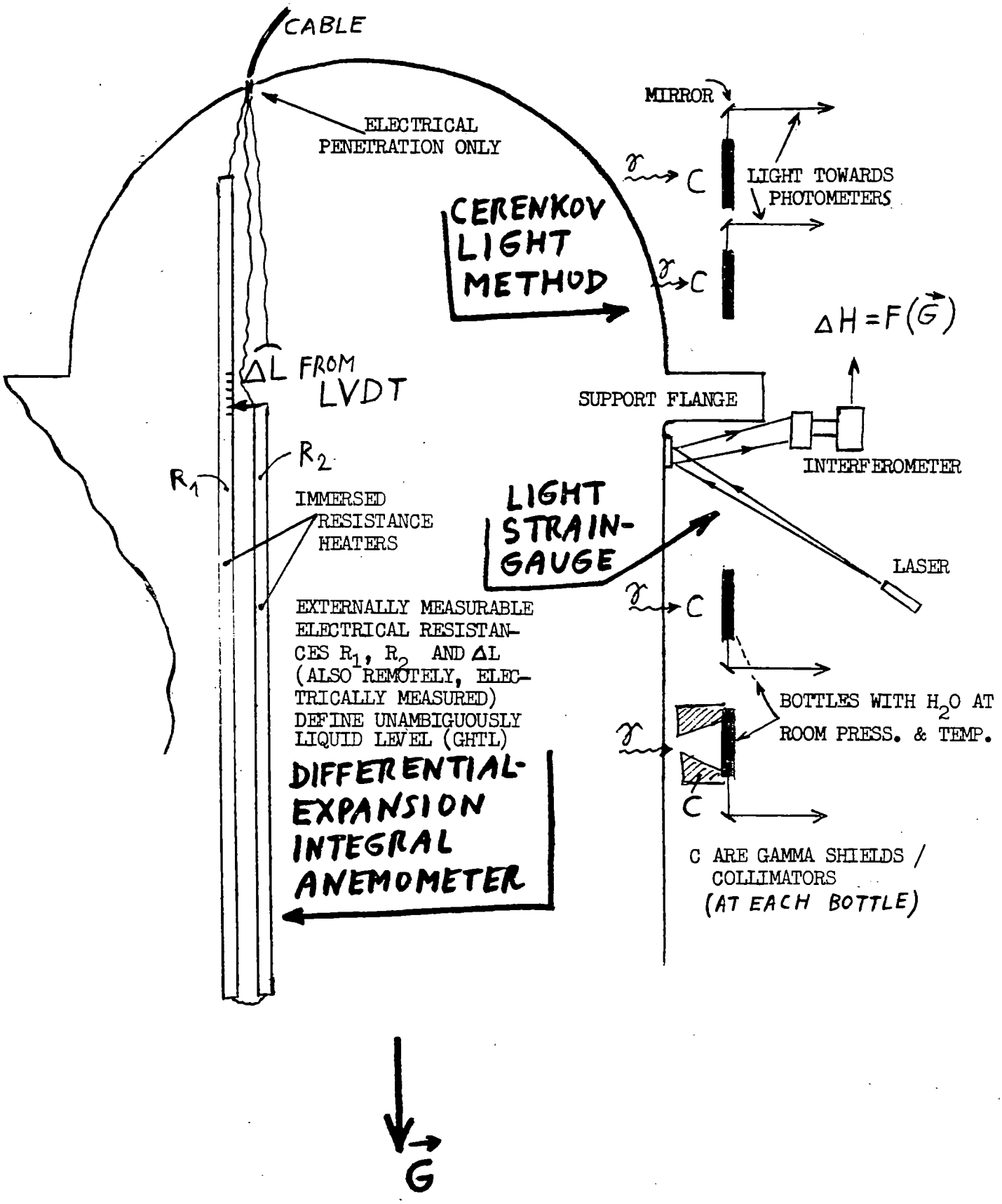
CABLE
ELECTRICAL PENETRATION ONLY
MIRROR
LIGHT TOWARDS PHOTOMETERS
CERENKOV LIGHT METHOD
ΔH = F(G)
ΔL FROM LVDT
SUPPORT FLANGE
INTERFEROMETER
R1
R2
IMMERSED RESISTANCE HEATERS
LIGHT STRAIN-GAUGE
LASER
EXTERNALLY MEASURABLE ELECTRICAL RESISTANCES R1, R2 AND ΔL (ALSO REMOTELY, ELECTRICALLY MEASURED) DEFINE UNAMBIGUOUSLY LIQUID LEVEL (GHTL)
BOTTLES WITH H2O AT ROOM PRESS. & TEMP.
DIFFERENTIAL-EXPANSION INTEGRAL ANEMOMETER
C ARE GAMMA SHIELDS / COLLIMATORS (AT EACH BOTTLE)
G

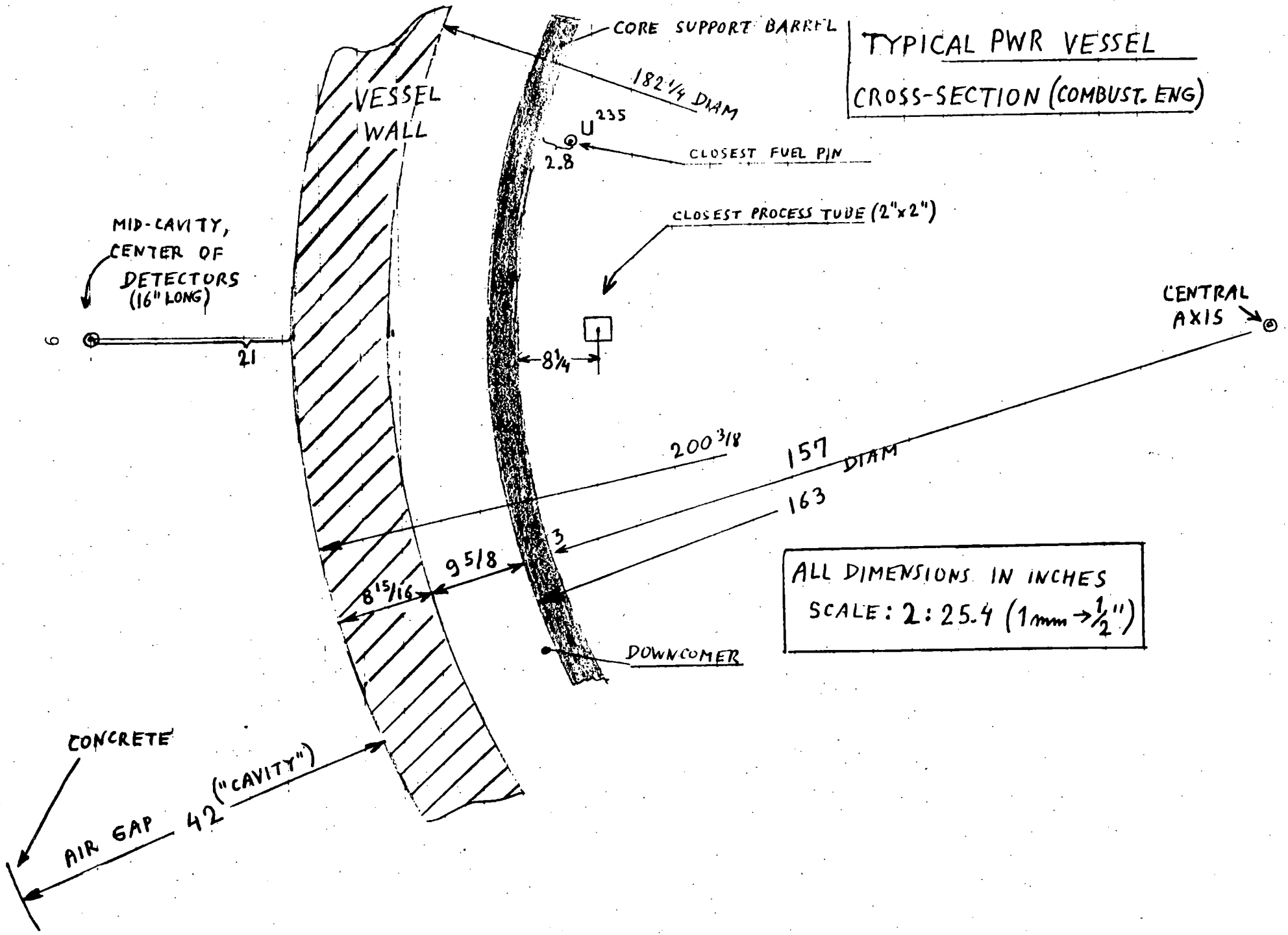
TYPICAL PWR VESSEL
CROSS-SECTION (COMBUST. ENG)
CORE SUPPORT BARREL
182 1/4 DIAM
VESSEL WALL
U 235
2.8
CLOSEST FUEL PIN
CLOSEST PROCESS TUBE (2"x2")
MID-CAVITY, CENTER OF DETECTORS (16" LONG)
6
21
8 1/4
CENTRAL AXIS
200 3/8
157 DIAM
163
3
9 5/8
8 15/16
DOWNCOMER
ALL DIMENSIONS IN INCHES
SCALE: 2:25.4 (1mm → 1/2")
CONCRETE
AIR GAP
42 ("CAVITY")

P. GRIFFITH

MASSACHUSETTS INSTITUTE OF TECHNOLOGY

DEPARTMENT OF MECHANICAL ENGINEERING

CAMBRIDGE, MASSACHUSETTS 02139

3-137

November 3, 1980

Dr. N. Kondic
U. S. Nuclear Regulatory Commission
Division of Reactor Safety
Mail Stop 1130 SS
Washington, D.C. 20555

Dear Ned,

I'm writing about the core water level probe meeting I attended Thursday. Nothing I heard makes me want to abandon heated thermocouples or DP cells. One idea, however, seems to me to be worth developing for other reasons. This is the Davco probe which gives an amazing amount of information. Let me continue by setting the problem statement and then give reasons for my conclusions.

More than anything else we would like the core water level probe to give an early indication of low water. For this reason I think the heated thermocouple in the upper plenum is insufficient. I had my student Greg DeWitt look at Diablo Canyon and as you can see on the accompanying figure we don't know what we have from the bottom of the pressurizer (4) to the top of the core (2). More than half the water in the system lies between these levels. I'd like to see heated TC's in the vessel and a DP cell measuring from the bottom of the pressurizer to the hot leg. This will allow the operator to track water level yet will not involve any new penetrations below the top of the core.

One question that I'm not at all satisfied that we have the answer to is when does the operator decide we've got a small break? He will have a variety of readings none of which will unequivically show a small break has occurred. How will he decide? How much water will be left in the system when he does decide? How long will he have to take appropriate action? How will he tell what is appropriate action? I don't see how the mis-named core water level probe will become part of the whole information system for the reactor operator. The group assembled yesterday was probably not the group to consider these questions - there were no operators present. I do think these are important questions though and am concerned that someone at NRC address them.

Let me now touch on the various proposals made for detecting core water level by less conventional means. I'm not really competent to comment on the various radiation methods proposed. All of them seemed to have poor sensativity and prone to contamination from damaged fuel. I suspect the operator will soon learn to ignore

the readings from these devices and won't believe them when he should. The EPRI device seems the furthest along but a lot of work seems to be needed even now.

Having poked many times at vessels with various amounts of water in them in order to see what the response is, I doubt that unambiguous enough readings will be obtained from a vibration analysis to convince the operator that he has a problem when he does. This might make good MS thesis but its a long way from a proven technology.

The elastic deformation measurements will be annihilated by noise. Strain changes due to temperature changes will be far more significant than the strain changes due to stress changes in filling or emptying the vessel.

Finally, I think the Davco device using micro-waves is no good for a reactor because of the large penetration that is needed. The device might make a splendid method of monitoring water level in the FLECHT experiments or the various blowdown experiments, however, and I think development should continue on it for one of those experiments. The amount of information that it was possible to obtain was very impressive.

In summary, I think that a core water level probe is not needed nearly so much as a RCS inventory measurement. Heated thermocouples have a place in the pressure vessel but I think a DP cell that can monitor the whole loop, (especially with the pumps off) is needed too. The question of how the operator will respond needs much more study. I don't think any of the advanced devices proposed are inherently simple enough or un-ambiguous enough to provide a viable alternative to the heated TC and DP cells. If you have any further questions, I'd be glad to discuss them with you.

Sincerely,

Enclosure:

Coolant inventory versus elevation graph

Peter Griffith
Professor of Mechanical Engineering

PG/jn

Diablo Canyon Unit 2 Coolant Inventory versus Elevation

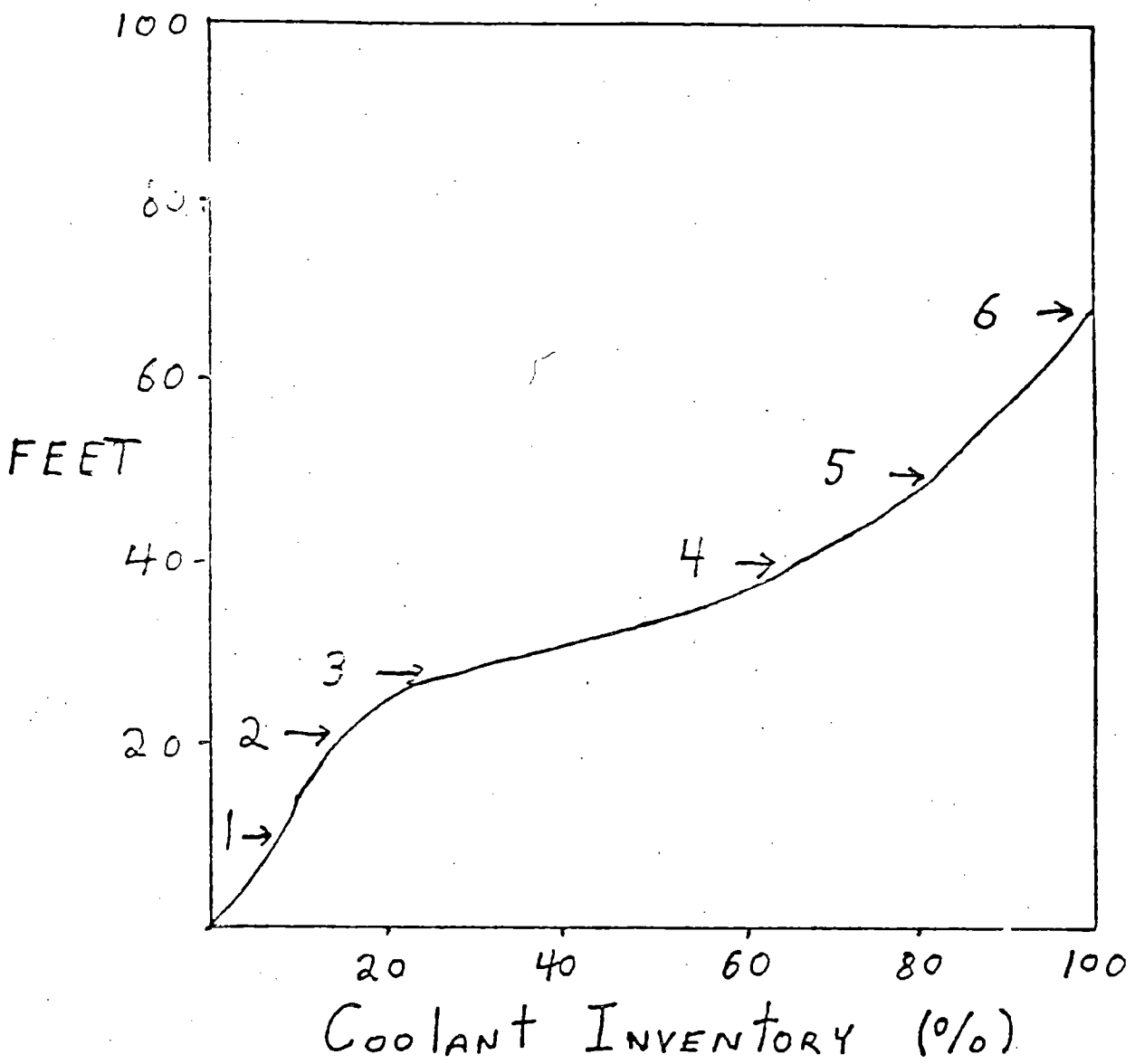

1. Bottom of core.
2. Top of core.
3. Center line of primary piping.
4. Bottom of pressurizer.
5. Top of primary coolant pump.
6. Top of U-tubes in steam generator.

Gregory L. DeWitt
MIT

POTENTIAL LIQUID LEVEL MEASUREMENT TECHNIQUES

BY

D. J. HANSON

EG&G IDAHO, INC.

METHODS CONSIDERED AS POSSIBLE LEVEL MEASUREMENTS

- SELF-POWERED DETECTOR (SPD)
- NEUTRON DETECTION
- DIFFERENTIAL PRESSURE
- NEUTRON SOURCE - DETECTOR COMBINATION

SELF-POWERED DETECTORS ARE SENSITIVE TO FLUID DENSITY

- CHANGES IN INTENSITY
  - -- TEST L2-3
  - -- REFLOOD
  - -- CALCULATION
- NOISE LEVEL

L4-3 Cladding Temperature vs SPND Output

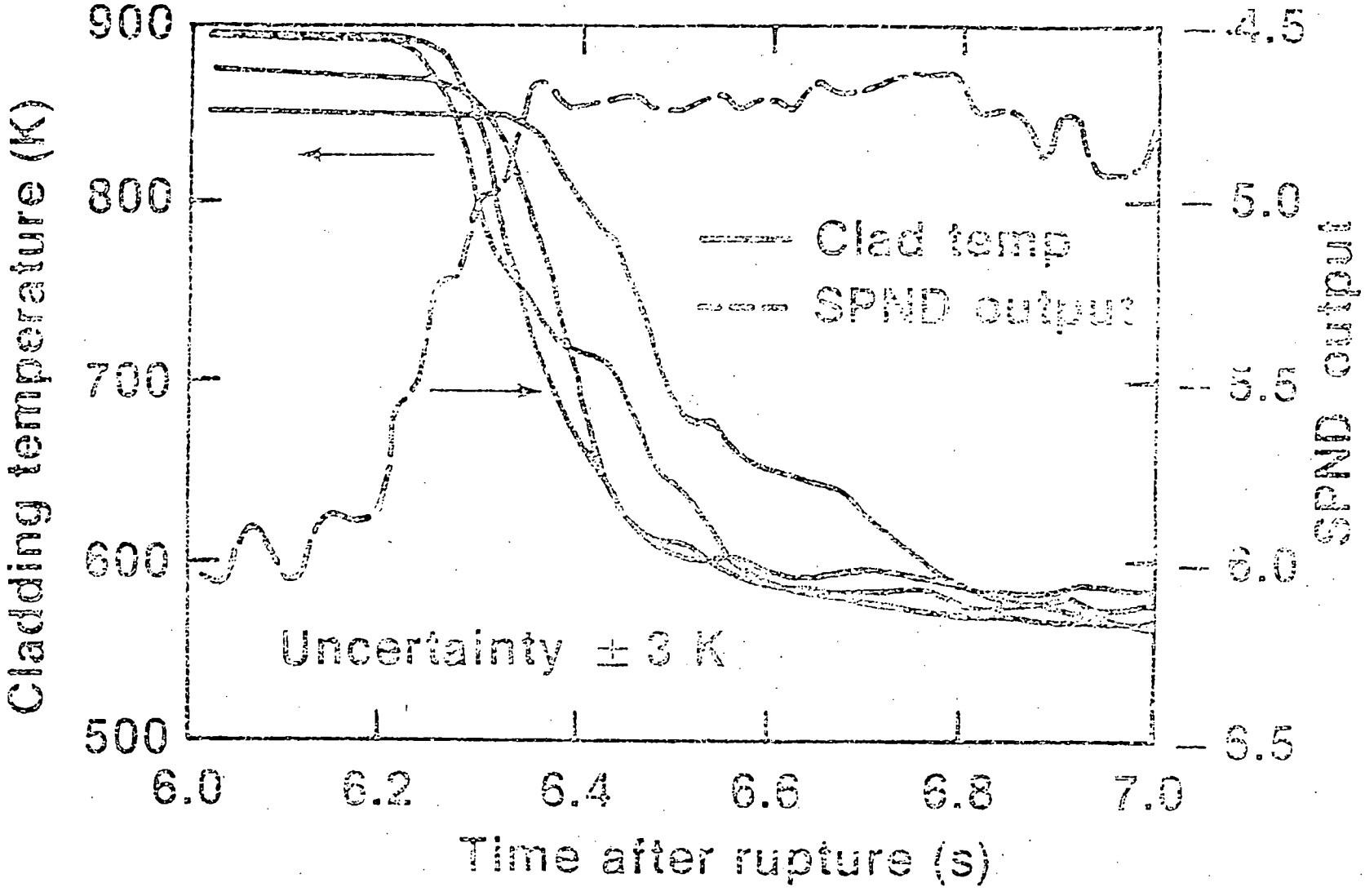

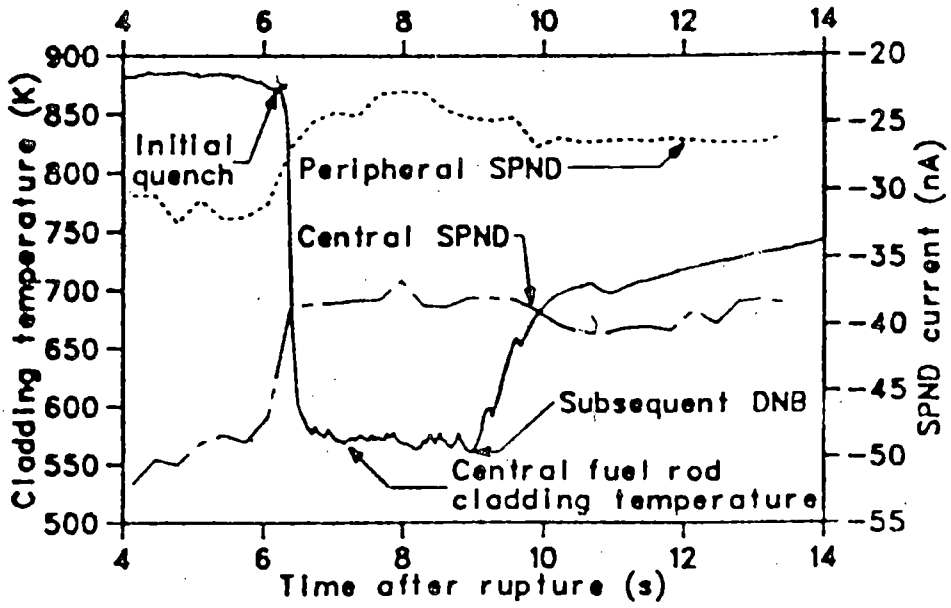

Response of Fuel Rod Cladding Temperature and SPNDs to the Initial Quench and Subsequent DNB in LOCE L2-3

Figure 3:

LOFT DOSE RATE AXIAL PROFILE 1000 SEC AFTER L3 7 LOCE SCRAM FROM: OAD PSA POINT KERNEL CODE

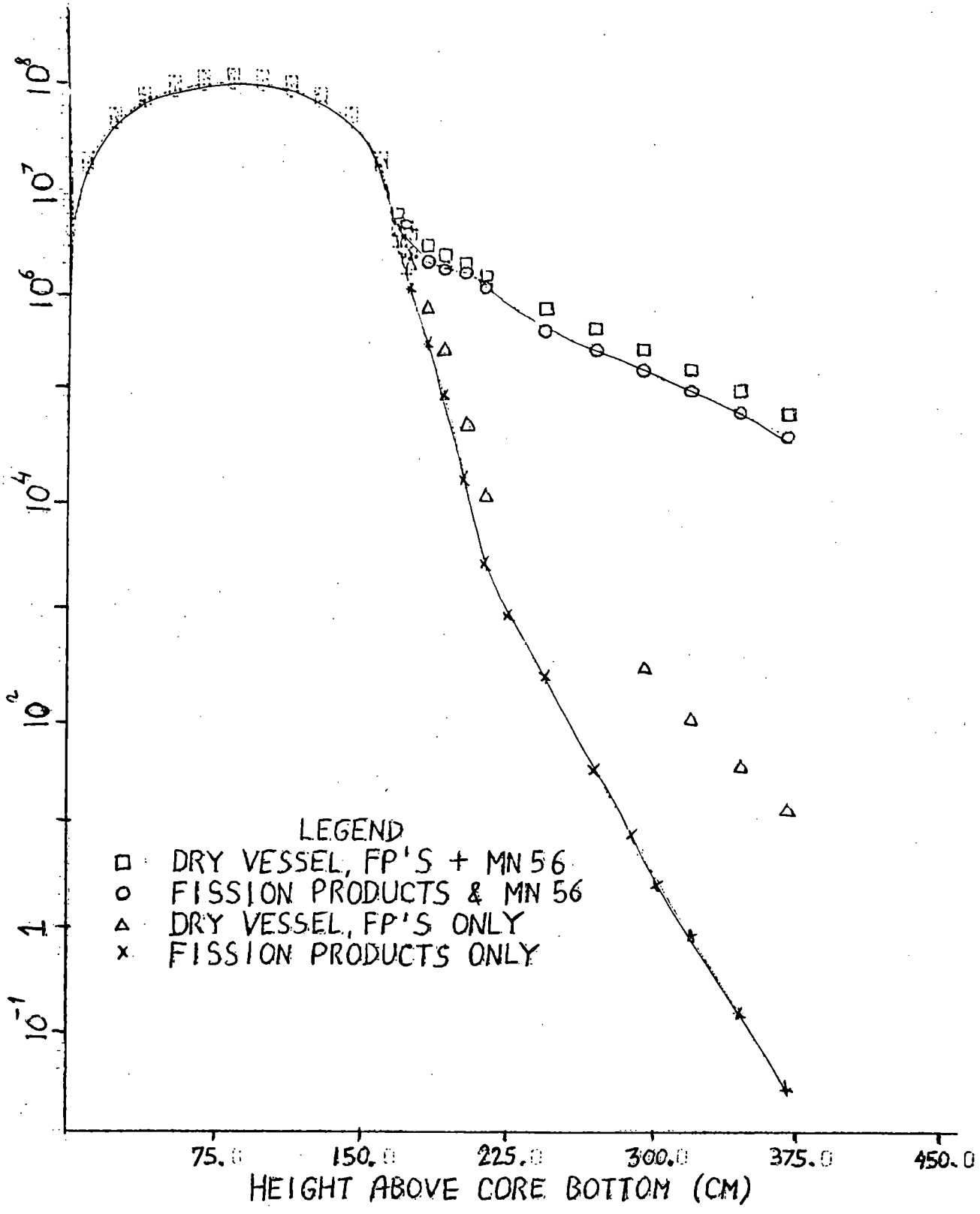

Table III. LOFT AXIAL GAMMA-RAY DOSE RATE PROFILE AT 1000 s AFTER L3-7 SCRAM No Water in Vessel

Position (cm)	Description	Dose Rates from Source (Rem/h)					Total Dose Rate (Rem/h)
		Core fission products	Springs ^{56}Mn	End Boxes ^{56}Mn	Upper Support ^{56}Mn	Reflector ^{56}Mn	
0.0	Core bottom	4.107+06	---	----	----	----	4.107+06
8.4		1.912+07	----	----	----	----	1.912+07
23.5		5.037+07	----	----	----	----	5.037+07
38.6		7.817+07	----	----	----	----	7.817+07
53.7		9.977+07	----	----	----	----	9.977+07
68.9		1.135+08	----	----	----	----	1.135+08
83.98	Core mid-plane	1.182+08	----	----	----	----	1.182+08
99.1		1.135+08	----	----	----	----	1.135+08
114.2		9.977+07	----	----	----	----	9.977+07
129.3		7.817+07	----	----	----	----	7.817+07
144.5		5.037+07	4.281+03	3.128+03	----	----	5.038+07
159.6		1.912+07	9.388+04	6.219+04	1.034+04		1.929+07
167.96	Core top	4.107+06	1.065+06	4.111+05	5.782+04	1.045+03	5.642+06
172.4	Springs top	2.606+06	1.065+06	6.929+05	8.806+04	1.529+03	4.453+06
174.6	End plugs top	1.989+06	6.180+05	1.061+06	1.145+05	1.944+03	3.784+06
183.6		7.913+05	1.916+05	1.669+06	3.014+05	4.617+03	2.958+06
192.5	End boxes top	3.211+05	7.146+04	1.061+06	9.701+05	1.116+04	2.435+06
203.2		6.003+04	1.228+04	1.262+05	1.735+06	6.464+04	1.998+06
213.9	Upper support top	1.201+04	2.216+03	2.134+04	9.701+05	4.734+05	1.484+06
244.0		2.656+03	4.329+02	3.846+03	1.054+05	6.403+05	7.526+05
268.0	1 m above core	8.284+02	1.237+02	1.017+03	2.383+04	4.478+05	4.736+05
294.0		2.772+02	----	2.986+02	6.341+03	2.950+05	3.020+05
319.0		9.795+01	----	9.486+01	1.873+03	1.909+05	1.930+05
343.0		3.612+01	----	3.196+01	5.954+02	1.225+05	1.232+05
368.0	2 m above core	1.378+01	----	1.125+01	2.002+02	7.433+04	7.456+04

*negligible when compared with total dose rate at this point

POSSIBLE TESTING TO VERIFY FEASIBILITY

- TANK TESTS WITH MULTIPLE SOURCES
- SPENT FUEL FACILITIES
- NUCLEAR FACILITIES

NEUTRON DETECTION METHOD

- PARALLEL STRINGS OF THERMAL DETECTORS OUTSIDE VESSEL
- SECOND STRING IN POSITION OF PEAKED THERMAL FLUX WHEN VESSEL FULL
- RATIO OF OUTPUTS WILL CHANGE AS VESSEL EMPTIES
- HAS DISADVANTAGE OF MEASURING DOWN-COMER LEVEL AS WELL AS CORE LEVEL

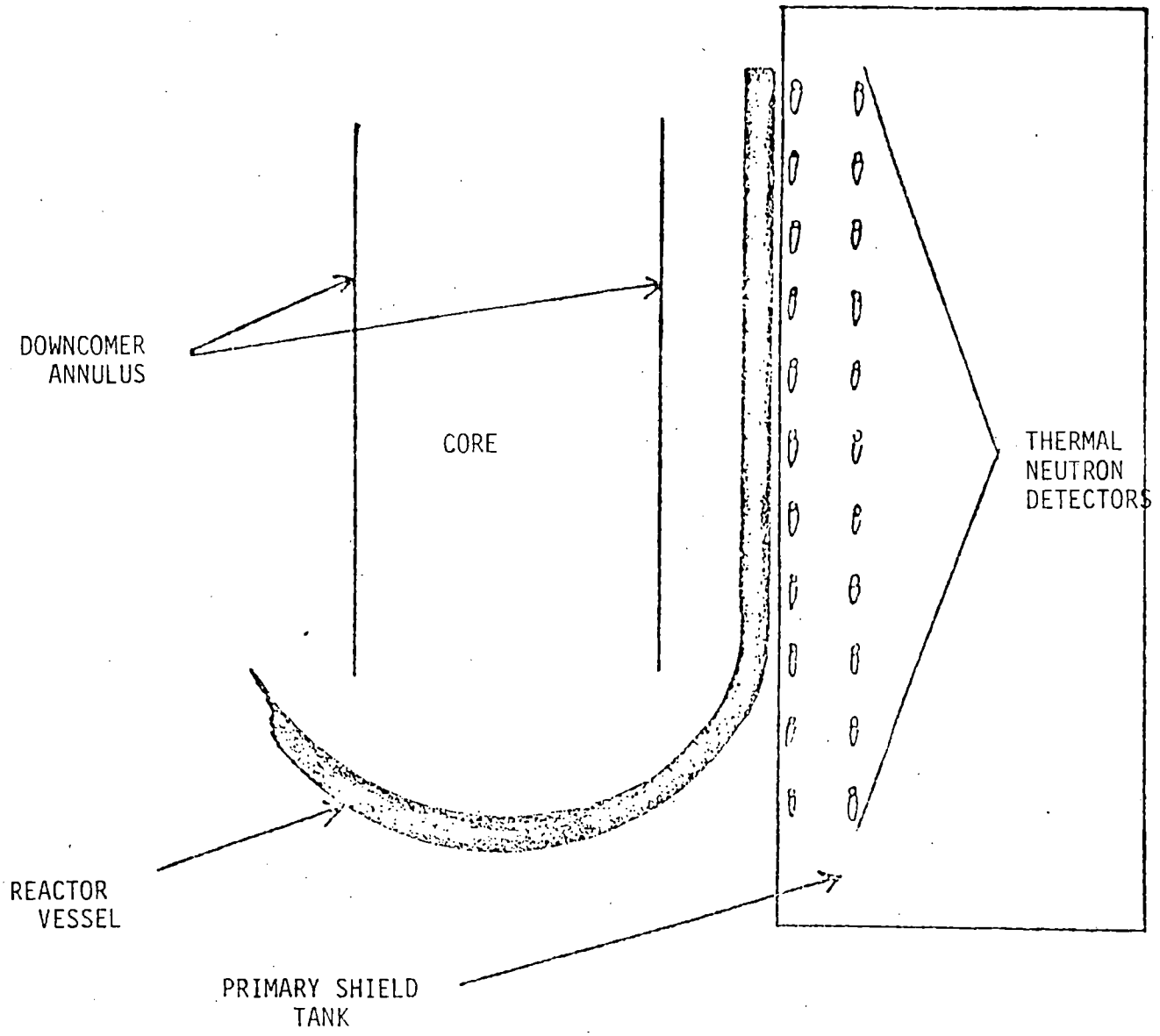
DOWNCOMER
ANNULUS
CORE
THERMAL
NEUTRON
DETECTORS
REACTOR
VESSEL
PRIMARY SHIELD
TANK

POTENTIAL PROBLEMS THAT CAN OCCUR WHEN USING DIFFERENTIAL PRESSURE TO MEASURE TRANSIENT LIQUID LEVEL

- FLOW SENSITIVITY
- CHANGES IN DENSITY IN:
  - -- REFERENCE LEG
  - -- MEDIA BEING MEASURED
- TRANSMISSION LINE BLOWDOWN OR DRAINAGE
- LINE PRESSURE SENSITIVITY
- AMBIENT TEMPERATURE CHANGES

FORM EG&G-230
(Rev. 9-76)

Page 1 of 2

PATENT IDEA RECORD

EG&G-PI _____

REC'D. _____

SUBJECT Liquid Level Probe for LOFT Reactor Vessel During Nuclear Operation

PLEASE IDENTIFY EARLIER RECORDINGS AND/OR DISCUSSIONS OF THIS INVENTION WHICH YOU CAN RECALL:

DRAWING(S) _____ NOTEBOOK (OR DIARY) _____ CORRESPONDENCE _____

WORK (OR PURCHASE) ORDER(S) _____ DISCUSSION(S) w/ G. Lassahn, L. D. Goodrich - Dec. '77

BRIEFLY DESCRIBE THE IDEA. SET FORTH ITS APPLICATION, OPERATION AND NOVEL FEATURES. SKETCHES SHOULD BE MADE WHENEVER THE IDEA IS CAPABLE OF ILLUSTRATION. PLEASE PREPARE FOUR COPIES, SIGN AND DATE EACH COPY AS INDICATED BELOW AND SUBMIT TO THE ANC PATENT LIAISON REPRESENTATIVE.

I propose that a linear array of neutron detectors be placed on the inside wall of the primary shield tank and a second array be placed parallel to the first, some distance into the tank (See Figure 1). The position of the second array would be such that the peak of the thermal neutron flux in the primary shield would occur at the second array of detectors when the reactor vessel is full of water. The position of this thermal neutron peak is dependent upon the amount of moderator (water) between the core and the primary shield tank; thus as the level of water in the downcomer changes, the position of the thermal neutron peak will change (see Figure 3). The ratio of the outputs of the inner neutron detector array to outer neutron detector array would then indicate the shift in thermal neutron flux peak, and hence the level of water in the downcomer.

The advantages of this method are 1) no reactor vessel penetrations; 2) freedom from interference from previously installed instrumentation; and 3) instrumentation will not be subject to the blowdown environment.

WITNESS: SIGNATURE OF INVENTOR(S):

READ AND UNDERSTOOD BY:

_____ (FULL FIRST NAME) (INITIAL) (LAST NAME) _____ DATE

DATE _____ (FULL FIRST NAME) (INITIAL) (LAST NAME) _____ DATE

PATENT IDEA RECORD
SUPPLEMENTAL INFORMATION

1. HAS THIS INVENTION BEEN REDUCED TO PRACTICE, AND IF SO, WHERE WAS IT USED?

NO

2. HAS IT BEEN PROVEN THAT THIS INVENTION IS OPERABLE? IF SO, HOW WAS THIS DONE?

NO

3. IN YOUR OPINION, DOES THIS INVENTION HAVE APPLICATION POSSIBILITIES IN EG&G IDAHO, INC. WORK AND IS SUCH APPLICATION CONTEMPLATED FOR FUTURE USE?

YES

4. IN YOUR OPINION, DOES THIS INVENTION HAVE POSSIBLE APPLICATION IN SOME FIELD OTHER THAN ATOMIC ENERGY?

NO

5. WAS THIS INVENTION DEVELOPED IN CONNECTION WITH AN EG&G IDAHO, INC. PROJECT ASSIGNMENT? IF SO, WHAT WAS THE NATURE OF SUCH PROJECT ASSIGNMENT?

NO

6. HAS THIS INVENTION BEEN DESCRIBED IN A REPORT OR PRESENTED AS A PAPER BEFORE ANY GROUP? IF SO, WHAT WAS THE EXTENT AND DATE OF DISTRIBUTION OF THE REPORT OR THE DATE AND GROUP TO WHOM THE PAPER WAS PRESENTED?

NO

7. IF THE ANSWER TO NO. 6 IS "NO", IS IT ANTICIPATED THAT THE INVENTION WILL BE DESCRIBED IN A REPORT? IF SO, WHAT IS THE EXPECTED DATE AND EXTENT OF PUBLICATION?

NO

8. HAVE YOU WORKED IN THE ATOMIC ENERGY FIELD PRIOR TO EMPLOYMENT BY EG&G IDAHO, INC. AND, IF SO FOR WHAT COMPANY OR COMPANIES?

YES WESTINGHOUSE ELECTRIC

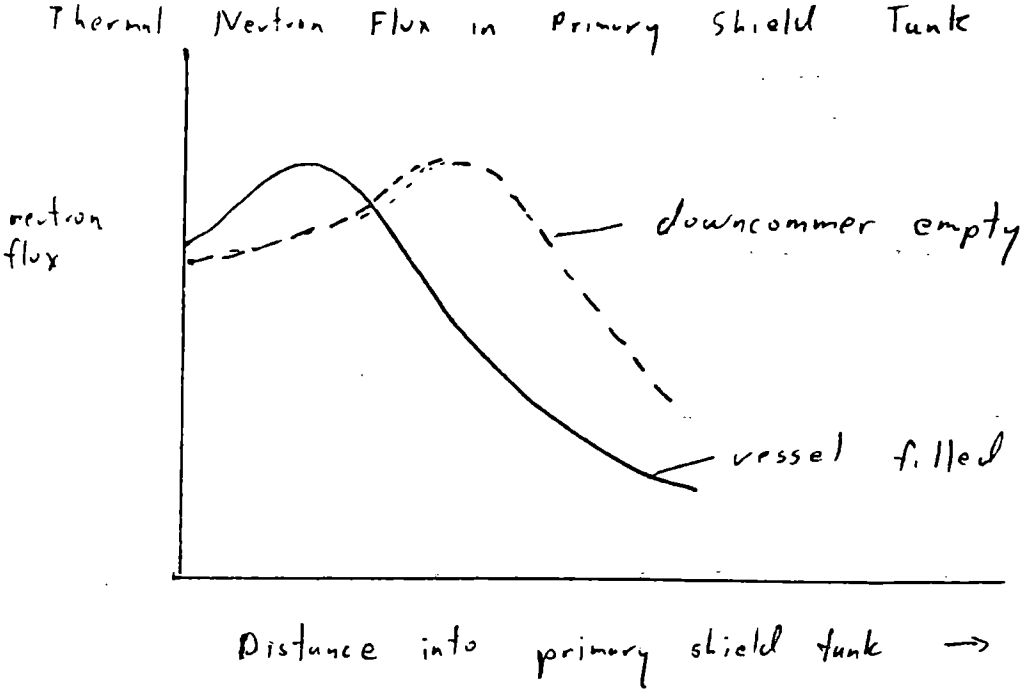
Thermal Neutron Flux in Primary Shield Tank
neutron flux
downcommer empty
vessel filled
Distance into primary shield tank →

Figure 2

INTEROFFICE CORRESPONDENCE

date September 4, 1980

to J. P. Adams

from R. T. McCracken R.T. McCracken

subject LOFT UPPER PLENUM GAMMA DOSE RATE CALCULATIONS - RTMc-7-80

Refs:

(1) R. L. Engel, et. al., "ISOSHLD - A Computer Code for General Purpose Isotope Shielding Analysis," BNWL-236, June 1966
(2) ANS-5.1, "Decay Energy Release Rates Following Shutdown of Uranium-Fueled Thermal Reactors," 1979
(3) J. C. Courtney, ed., A Handbook of Radiation Shielding Data, Louisiana State University, July 1976
(4) R. T. McCracken, "Shielding Analysis: LOFT Downcomer Instrumentation Stalk Removal Cask," RE-P-79-25, March 1979
(5) R. E. Malenfant, "QAD: A Series of Point-Kernel General-Purpose Shielding Programs," LA-3573, April 1967
(6) R. A. Grimesey, Gri-6-80, "Fission Product Gamma Dose Rates in LOFT After Shutdown," August 6, 1980

Calculations were made to estimate the gamma-ray dose rate profile along the axial centerline of the LOFT reactor at 1000 and 10000 seconds after the L3-7 test scram. The calculated dose rate profiles from the bottom of the active core to 2 m above the top of the active core are given in the attached Tables I and II for the 1000 and 10000 s decay time cases, respectively. The profiles are illustrated graphically in Figures 1 and 2 again for the 1000 and 10000 s cases, respectively.

The calculations included two types of post-shutdown gamma-ray source terms; fission product decay based on the burn-up accumulated on the core during the L3-7 test and activation product decay based on estimated ^{56}Mn concentrations in the structural materials above the core. Tables I and II give the breakdown of dose rate contributions from the core fission product source and the activation product sources from each successively higher structural region. Figures 1 and 2 give both the total dose rate profile and the fission product dose rate profile for comparison. The results show that in the core region the fission product decay gammas dominate the dose rate profile, but above the core the fission product gamma dose rate is rapidly attenuated and the activation product gammas dominate.

The results in Tables I and II are for the reactor vessel filled with water with a density of 0.83 g/cm^3. A set of dose rate calculations was made using the 1000 s source term and with all of the water removed from the reactor vessel. The results of these calculations

FORM EG&G-954
(Rev. 05-79)

are given in Table III and are plotted as isolated points on Figure 3 for comparison with the flooded vessel results. The plot shows that the relative fission product contribution to the total dose rate above the core increased when the water was removed, but the fission product dose rate remained essentially negligible compared to the Mn^{56} decay dose rate.

Details of the methods and data used in obtaining the dose rate profiles are given below.

Fission Product Source

The fission product source terms for the active core region were calculated with the RIBD portion of the ISOSHLD[1] computer code. RIBD generates 25 group photon production rates over the energy range of 0.015 to 3.0 MeV based on an input reactor power history and decay times.

The power history of the L3-7 test is shown in Figure 4. The integrated burn-up for this test was 91.15 EFPH. Several RIBD calculations were made to obtain a reasonable estimate of the fission product source term. A comparison of these calculations is given in Table IV. Because of uncertainties in determining the residual fission product source from operation prior to L3-7 the results from run 2 were used in calculating the fission product dose rates. This run represented a one step full power burn-up to 91.15 EFPH and gave only a slightly higher total source than the four cycle run 1 which followed an approximation to the actual power history.

The results of the run 2 RIBD calculation were compared with the results of a hand calculation using the ANSI-5.1[2] decay heat standard. Agreement was quite good. For further verification, a RIBD calculation was made for one megawatt for one week with 1000 and 10000 s decay times. Results from this run were compared with data for the same conditions given in Courtney's shielding handbook.[3] Again, the agreement was very good (i.e., within 10%).

Activation Product Source

A complete evaluation of the activation product source term requires a detailed knowledge of the isotopic composition of the materials in the reactor, cross section information for these isotopes, and a neutron flux profile throughout the reactor. Such an evaluation is beyond the scope of the present analysis, however, previous post-shutdown gamma analyses have shown that the activation product ^{56}Mn is the "bad actor" for intermediate irradiation and decay times. ^{56}Mn, with a 2.56 h half-life, is formed by neutron capture in ^{55}Mn commonly found in stainless steels.

In order to estimate the activation product source term the equilibrium ^{56}Mn concentration in each of the structural material zones above the active core was calculated from the relation:

$$^{56}Mn = \phi_{th} \Sigma_a^{55} / \lambda^{56}$$

where

^{56}Mn = ^{56}Mn concentration, atom/cm^3

ϕ_{th} = the thermal group flux, neutrons/cm^2-sec

Σ_a^{55} = the macroscopic capture cross section of ^{55}Mn averaged over the thermal group, cm^{-1}

λ^{56} = the ^{56}Mn decay constant, sec^{-1}.

The thermal neutron flux profile above the top of the core was available from an earlier evaluation[4] of the activation source term in the downcomer instrument stalk. The other parameters are readily available from various handbooks. The above equation assumes infinite reactor operation and thus is somewhat conservative for the 91.15 EFPH of L3-7.

The ^{56}Mn decay rate at time t after reactor shutdown is given by:

$$S = \lambda^{56} \cdot ^{56}Mn(t) = \lambda^{56}(^{56}Mn(t_o) \exp(-\lambda^{56} t))$$

where

$Mn^{56}(t_o)$ = the equilibrium ^{56}Mn concentration

S = decay rate as disintegrations/cm^3-sec.

The decay gamma spectrum for ^{56}Mn is given in Table V. The total ^{56}Mn decay gamma source strengths for each structural material zone above the active core are given in Table VI. These structural material zones were defined by the calculational model used for this study and are defined in the section covering the model. The ^{56}Mn decay sources for the core and vessel fillers were also calculated but were found not to contribute significantly to the axial centerline dose rates and are not reported.

Gamma-Ray Dose Rate Calculations

The gamma-ray transport calculations were made with the QAD-P5A[5] point-kernel code. The point-kernel method represents the source geometry as a series of point isotropic sources. The uncollided dose rate from each source point to the detector point is computed then an appropriate buildup factor is applied to account for additional scattered gammas which reach the detector point. The contributions from all source points are then summed to give the total dose rate at the detector point. This method gives good dose rate estimates in a wide variety of applications, however, no useable flux spectrum data other than the uncollided fluxes can be obtained with this method.

The QAD code contains an internal gamma attenuation coefficient data library covering an energy range of 0.05 to 10.0 MeV. The 0.05 MeV lower cutoff necessitated dropping the lowest three groups of the ISOSHLD source (i.e., 0.015, 0.025, and 0.035 MeV). The elimination of the source gammas in these groups will have no effect on the calculated dose rates because of the extremely short path lengths of these low energy gammas.

The code also contains provisions for spatial shaping of the sources. This feature was used to give a cosine shape to the fission product source over the core height. The ^{56}Mn source in the upper reflector was also shaped to follow the exponential falloff of the thermal neutron flux in this region.

The geometric model used for the QAD calculations was constructed based on several existing models of the LOFT reactor from previous and ongoing neutronics calculations. A diagram of the QAD model is given in Figure 5. Material descriptions are given in Table VII. The material densities were determined assuming the vessel was filled with water at 0.83 g/cm^3 and the fuel was at the full power temperature conditions.

Although the model was constructed in three dimensions volumetric homogenization was done within each region. This should be noted as being of particular importance for axial calculations since there are many longitudinal structures in the reactor which are smeared out in the homogenization process. Thus the model cannot account for streaming effects which may cause an underprediction of the dose rate. On the other hand, the post-shutdown photons are born within the dense structural material and smearing these out over a region tends to increase the photon escape particularly in the lower energies.

Experience with small bundles of fuel rods has shown poor agreement between discrete and homogenized models for axial centerline dose rates above the bundle. Discrepancies on the order of factors of 2 have been noted; however, the error should be somewhat less for a full core; therefore, the homogeneous model was deamed sufficient for this order of magnitude study.

A hand calculation[6] by Bob Grimesey estimated an average equilibrium fission product dose rate of 4×10^8 Rem/h at time zero after shutdown. This result cannot be compared directly with the QAD results because of the differences in operating time, shutdown time, and source shaping. However, the results are in the same ballpark. Some rough scaling was done in an attempt to eliminate the differences and this resulted in an estimated QAD dose rate of 1.25×10^8 Rem/h for the same conditions used by Grimesey. This should be considered as good agreement due to the approximate nature of Grimesey's calculation and the scaling of the QAD result.

jah

cc: E. C. Anderson
M. A. Bray
W. R. Carpenter
R. A. Grimesey
B. G. Schnitzler BGS
G. K. Wachs GKW
F. J. Wheeler FJW
R. T. McCracken File
Central File

Table I. LOFT AXIAL GAMMA-RAY DOSE RATE PROFILE AT 1000 s AFTER L3-7 SCRAM

Position (cm)	Location Description	Dose Rates from Source (Rem/h)					Total Dose Rate (Rem/h)
		Core fission products	Springs ^{56}Mn	End Boxes ^{56}Mn	Upper Support ^{56}Mn	Reflector ^{56}Mn	
0.0	Core bottom	2.874+06	----*	----	----	----	2.874+06
8.4		1.567+07	----	----	----	----	1.567+07
23.5		4.182+07	----	----	----	----	4.182+07
38.6		6.491+07	----	----	----	----	6.491+07
53.7		8.286+07	----	----	----	----	8.286+07
68.9		9.424+07	----	----	----	----	9.424+07
83.98	Core mid-plane	9.814+07	----	----	----	----	9.814+07
99.1		9.424+07	----	----	----	----	9.424+07
114.2		8.286+07	----	----	----	----	8.286+07
129.3		6.491+07	----	----	----	----	6.491+07
144.5		4.182+07	----	----	----	----	4.182+07
159.6		1.567+07	6.015+04	2.952+04	----	----	1.576+07
167.96	Core top	2.874+06	9.575+05	2.726+05	2.318+04	----	4.127+06
172.4	Springs top	1.595+06	9.575+05	5.097+05	3.900+04	----	3.101+06
174.6	End plugs top	1.139+06	5.182+05	8.409+05	5.382+04	----	2.552+06
183.6		3.399+05	1.212+05	1.397+06	1.870+05	1.313+03	2.046+06
192.5	End boxes top	1.054+05	3.437+04	8.409+05	8.308+05	4.164+03	1.816+06
203.2		1.565+04	4.521+03	7.489+04	1.526+06	3.177+04	1.653+06
213.9	Upper support top	2.530+03	6.741+02	9.783+03	8.308+05	3.334+05	1.177+06
244.0		2.167+02	----	6.288+02	3.162+04	4.438+05	4.763+05
268.0	1 m above core	3.137+01	----	7.193+01	2.977+03	2.935+05	2.966+05
294.0		4.939	----	----	3.310+02	1.882+05	1.885+05
319.0		0.829	----	----	----	1.203+05	1.203+05
343.0		0.146	----	----	----	7.667+04	7.667+04
368.0	2 m above core	2.68-02	----	----	----	4.480+04	4.480+04

*negligible when compared with total dose rate at this point.

Table II. LOFT AXIAL GAMMA-RAY DOSE RATE PROFILE AT 10,000 s AFTER L3-7 SCRAM

Position (cm)	Description	Dose Rates from Source (Rem/h)					Total Dose Rate (Rem/h)
		Core fission products	Springs ^{56}Mn	End Boxes ^{56}Mn	Upper Support ^{56}Mn	Reflector ^{56}Mn	
0.0	Core bottom	1.007+06	---*	----	----	----	1.007+06
8.4		5.740+06	----	----	----	----	5.740+06
23.5		1.536+07	----	----	----	----	1.536+07
38.6		2.385+07	----	----	----	----	2.385+07
53.7		3.044+07	----	----	----	----	3.044+07
68.9		3.462+07	----	----	----	----	3.462+07
83.98	Core mid-plane	3.605+07	----	----	----	----	3.605+07
99.1		3.462+07	----	----	----	----	3.462+07
114.2		3.044+07	----	----	----	----	3.044+07
129.3		2.385+07	----	----	----	----	2.385+07
144.5		1.536+07	----	----	----	----	1.536+07
159.6		5.740+06	3.063+04	1.506+04	1.578+03	----	5.787+06
167.96	Core top	1.007+06	4.876+05	1.391+05	1.180+04	----	1.646+06
172.4	Springs top	5.494+05	4.876+05	2.600+05	1.986+04	----	1.317+06
174.6	End plugs top	3.883+05	2.639+05	4.290+05	2.740+04	----	1.109+06
183.6		1.115+05	6.172+04	7.127+05	9.518+04	6.703+02	9.818+05
192.5	End boxes top	3.317+04	1.750+04	4.290+05	4.229+05	2.125+03	9.047+05
203.2		4.570+03	2.302+03	3.820+04	7.771+05	1.621+04	8.384+05
213.9	Upper support top	6.888+02	3.296+02	4.990+03	4.229+05	1.702+05	5.991+05
244.0		5.424+01	2.349+01	3.208+02	1.610+04	2.265+05	2.430+05
268.0	1 m above core	7.322	----	----	1.515+03	1.498+05	1.514+05
294.0		1.077	----	----	1.685+02	9.606+04	9.623+04
319.0		0.169	----	----	2.125+01	6.141+04	6.143+04
343.0		0.028	----	----	----	3.914+04	3.914+04
368.0	2 m above core	4.83-03	----	----	----	2.287+04	2.287+04

*negligible when compared with total dose rate at this point

Table III. LOFT AXIAL GAMMA-RAY DOSE RATE PROFILE AT 1000 s AFTER L3-7 SCRAM No Water in Vessel

Position (cm)	Description	Dose Rates from Source (Rem/h)					Total Dose Rate (Rem/h)
		Core fission products	Springs ^{56}Mn	End Boxes ^{56}Mn	Upper Support ^{56}Mn	Reflector ^{56}Mn	
0.0	Core bottom	4.107+06	---*	----	----	----	4.107+06
8.4		1.912+07	----	----	----	----	1.912+07
23.5		5.037+07	----	----	----	----	5.037+07
38.6		7.817+07	----	----	----	----	7.817+07
53.7		9.977+07	----	----	----	----	9.977+07
68.9		1.135+08	----	----	----	----	1.135+08
83.98	Core mid-plane	1.182+08	----	----	----	----	1.182+08
99.1		1.135+08	----	----	----	----	1.135+08
114.2		9.977+07	----	----	----	----	9.977+07
129.3		7.817+07	----	----	----	----	7.817+07
144.5		5.037+07	4.281+03	3.128+03	----	----	5.038+07
159.6		1.912+07	9.388+04	6.219+04	1.034+04		1.929+07
167.96	Core top	4.107+06	1.065+06	4.111+05	5.782+04	1.045+03	5.642+06
172.4	Springs top	2.606+06	1.065+06	6.929+05	8.806+04	1.529+03	4.453+06
174.6	End plugs top	1.989+06	6.180+05	1.061+06	1.145+05	1.944+03	3.784+06
183.6		7.913+05	1.916+05	1.669+06	3.014+05	4.617+03	2.958+06
192.5	End boxes top	3.211+05	7.146+04	1.061+06	9.701+05	1.116+04	2.435+06
203.2		6.003+04	1.222+04	1.262+05	1.735+06	6.464+04	1.998+06
213.9	Upper support top	1.201+04	2.216+03	2.134+04	9.701+05	4.784+05	1.484+06
244.0		2.656+03	4.329+02	3.846+03	1.054+05	6.403+05	7.526+05
268.0	1 m above core	8.284+02	1.237+02	1.017+03	2.383+04	4.478+05	4.736+05
294.0		2.772+02	----	2.986+02	6.341+03	2.950+05	3.020+05
319.0		9.795+01	----	9.486+01	1.873+03	1.909+05	1.930+05
343.0		3.612+01	----	3.196+01	5.954+02	1.225+05	1.232+05
368.0	2 m above core	1.378+01	----	1.125+01	2.002+02	7.433+04	7.456+04

*negligible when compared with total dose rate at this point

Table IV. RIBD TOTAL FISSION-PRODUCT SOURCE TERMS

No.	Description of Calculation	Source at Time t after Shutdown (γ/sec) $t=10^3$ sec	$t=10^4$ sec
1	Multiple cycle burnup to 91.15 EFPH as shown in Figure 4	2.68+18	1.07+18
2	Single full power cycle to 91.15 EFPH	2.82+18	1.20+18

Table V. ^{56}Mn DECAY GAMMA SPECTRUM*

Gamma Energy (MeV)	Intensity**
0.85	100
1.811	29
2.110	15

*from Radiological Health Handbook, January 1970, U.S. Dept. of Health, Education, and Welfare

**Intensity = number of gamma-rays emitted per 100 disintegrations

Table VI. ^{56}Mn DECAY GAMMA SOURCE STRENGTHS

Region	Volume	Total Source at Time t after shutdown (decays/sec) $t=10^3$ s	$t=10^4$ s
Springs	1.63+04	8.74+14	4.45+14
End boxes	5.31+04	1.98+15	1.01+15
Upper support	6.38+04	3.20+15	1.63+15
Reflector	7.60+05	2.01+15	1.03+15

Table VII. MATERIAL DESCRIPTION FOR LOFT REACTOR MODEL

Number	Description	Constituent Elements	Density (g/cm^3)
1	Active core	H	0.056
		O	1.088
		Zr	0.552
		U	2.606
2	Springs	H	0.056
		O	0.439
		Fe	1.513
3	Upper end plugs	H	0.062
		O	0.500
		Zr	2.109
4	Upper end boxes	H	0.072
		O	0.573
		Fe	1.739
5	Upper support	H	0.055
		O	0.443
		Fe	3.120
6	H_2O & steel (upper & lower reflector's)	H	0.083
		O	0.664
		Fe	0.780
7	Core filler	H	0.005
		O	0.037
		Fe	7.410
8	Downcomer	H	0.092
		O	0.738
9	Vessel filler	Fe	7.800
10	Lower end plugs	H	0.065
		O	0.516
		Zr	1.965
11	End box plates	H	0.028
		O	0.221
		Fe	5.468
12	End box legs	H	0.083
		O	0.661
		Fe	0.811
13	Void	H	0.0

Figure 1:

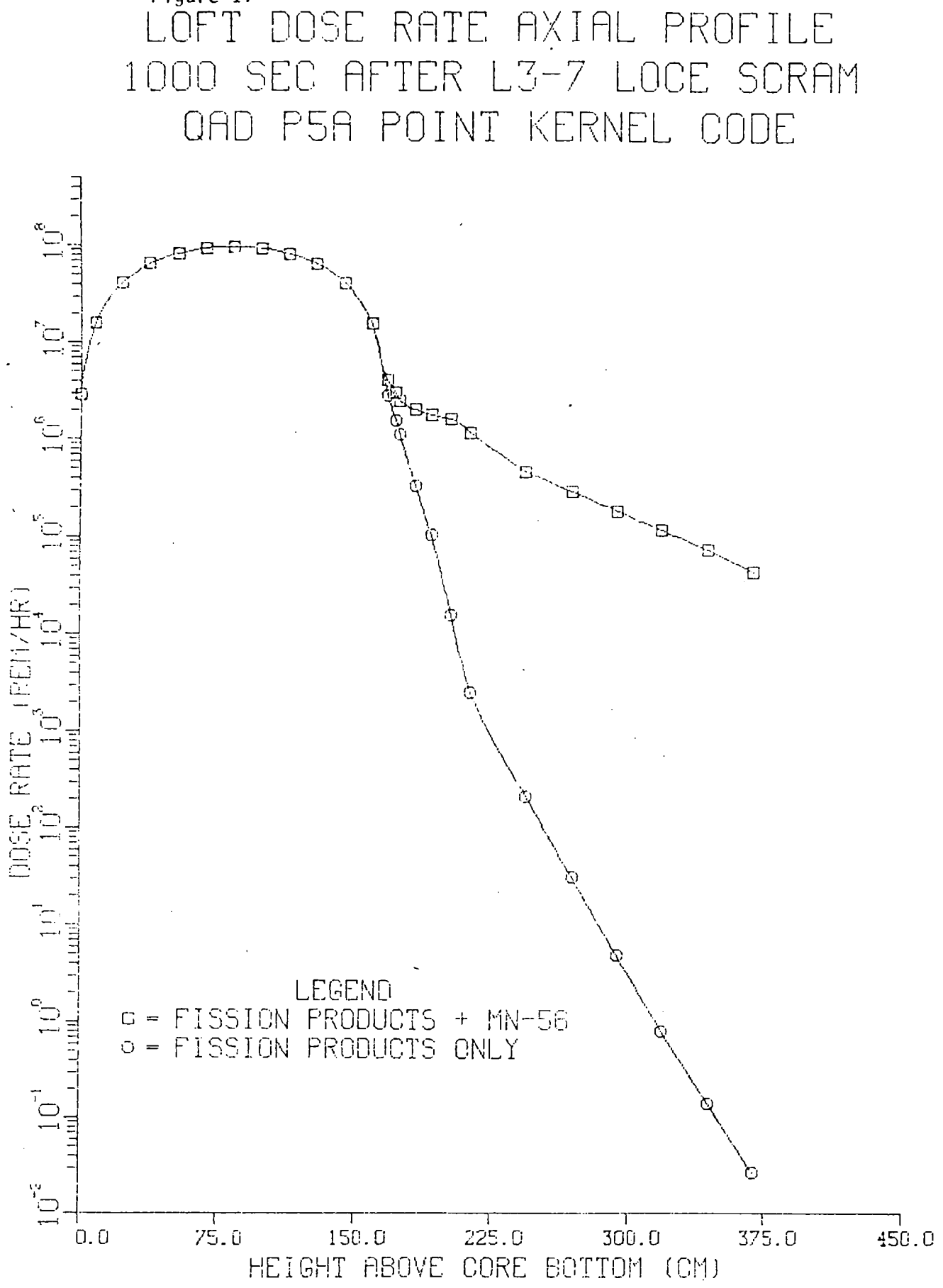
LOFT DOSE RATE AXIAL PROFILE
1000 SEC AFTER L3-7 LOCE SCRAM
QAD P5A POINT KERNEL CODE
DOSE RATE (REM/HR)
10^{-2}
10^{-1}
10^{0}
10^{1}
10^{2}
10^{3}
10^{4}
10^{5}
10^{6}
10^{7}
10^{8}
LEGEND
□ = FISSION PRODUCTS + MN-56
○ = FISSION PRODUCTS ONLY
0.0
75.0
150.0
225.0
300.0
375.0
450.0
HEIGHT ABOVE CORE BOTTOM (CM)

Figure 2:

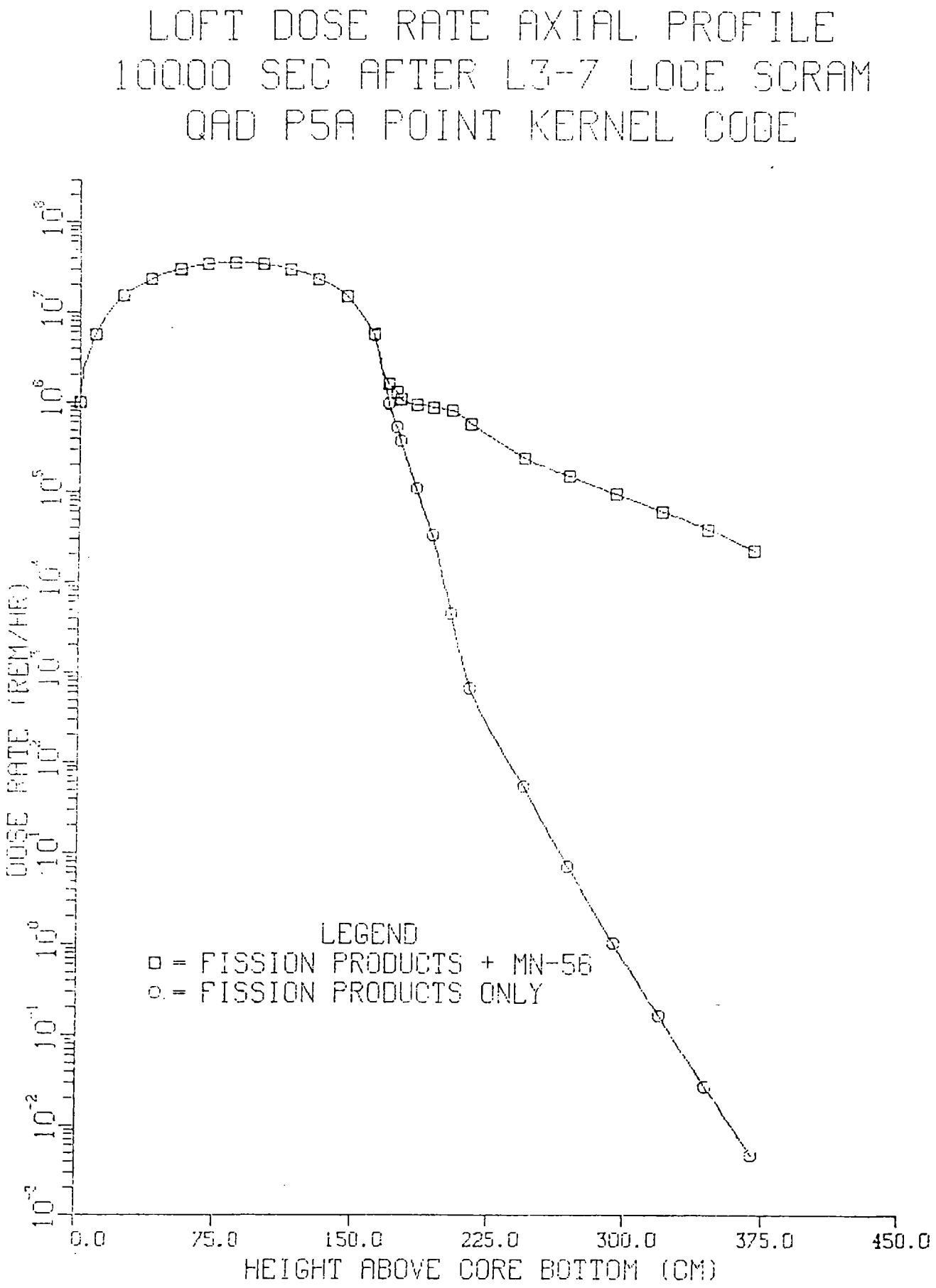
LOFT DOSE RATE AXIAL PROFILE
10000 SEC AFTER L3-7 LOCE SCRAM
QAD P5A POINT KERNEL CODE
DOSE RATE (REM/HR)
10^{-3} 10^{-2} 10^{-1} 10^{0} 10^{1} 10^{2} 10^{3} 10^{4} 10^{5} 10^{6} 10^{7} 10^{8}
LEGEND
□ = FISSION PRODUCTS + MN-56
○ = FISSION PRODUCTS ONLY
0.0 75.0 150.0 225.0 300.0 375.0 450.0
HEIGHT ABOVE CORE BOTTOM (CM)

Figure 3:

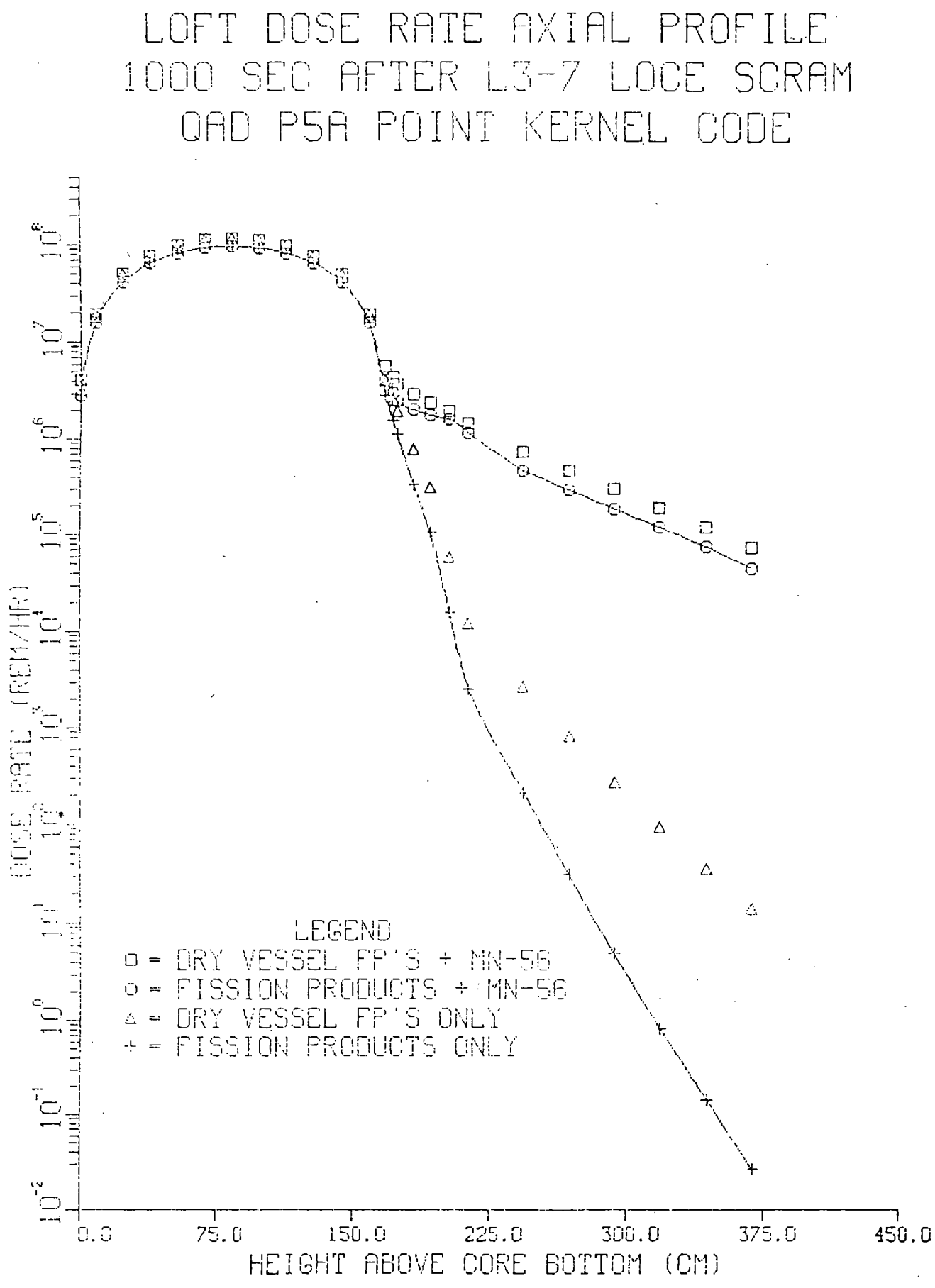
LOFT DOSE RATE AXIAL PROFILE
1000 SEC AFTER L3-7 LOCE SCRAM
QAD P5A POINT KERNEL CODE
DOSE RATE (REM/HR)
10^{-2}
10^{-1}
10^{0}
10^{1}
10^{2}
10^{3}
10^{4}
10^{5}
10^{6}
10^{7}
10^{8}
LEGEND
□ = DRY VESSEL FP'S + MN-56
○ = FISSION PRODUCTS + MN-56
△ = DRY VESSEL FP'S ONLY
+ = FISSION PRODUCTS ONLY
0.0
75.0
150.0
225.0
300.0
375.0
450.0
HEIGHT ABOVE CORE BOTTOM (CM)

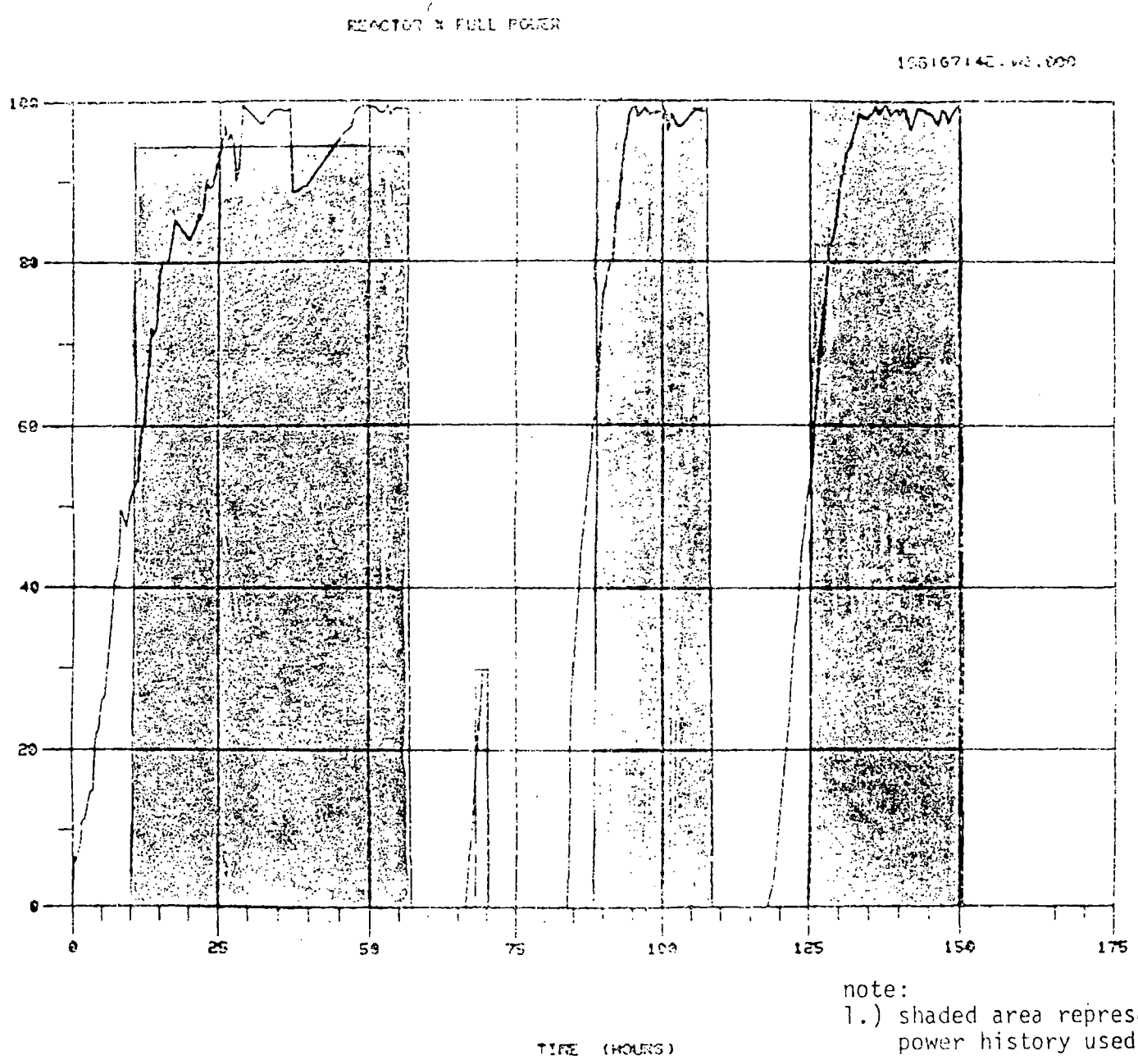

note:
1.) shaded area represents approximated power history used in RIBD run 1

2.) full power = 48.5 MW

Figure 4: L3-7 Power History

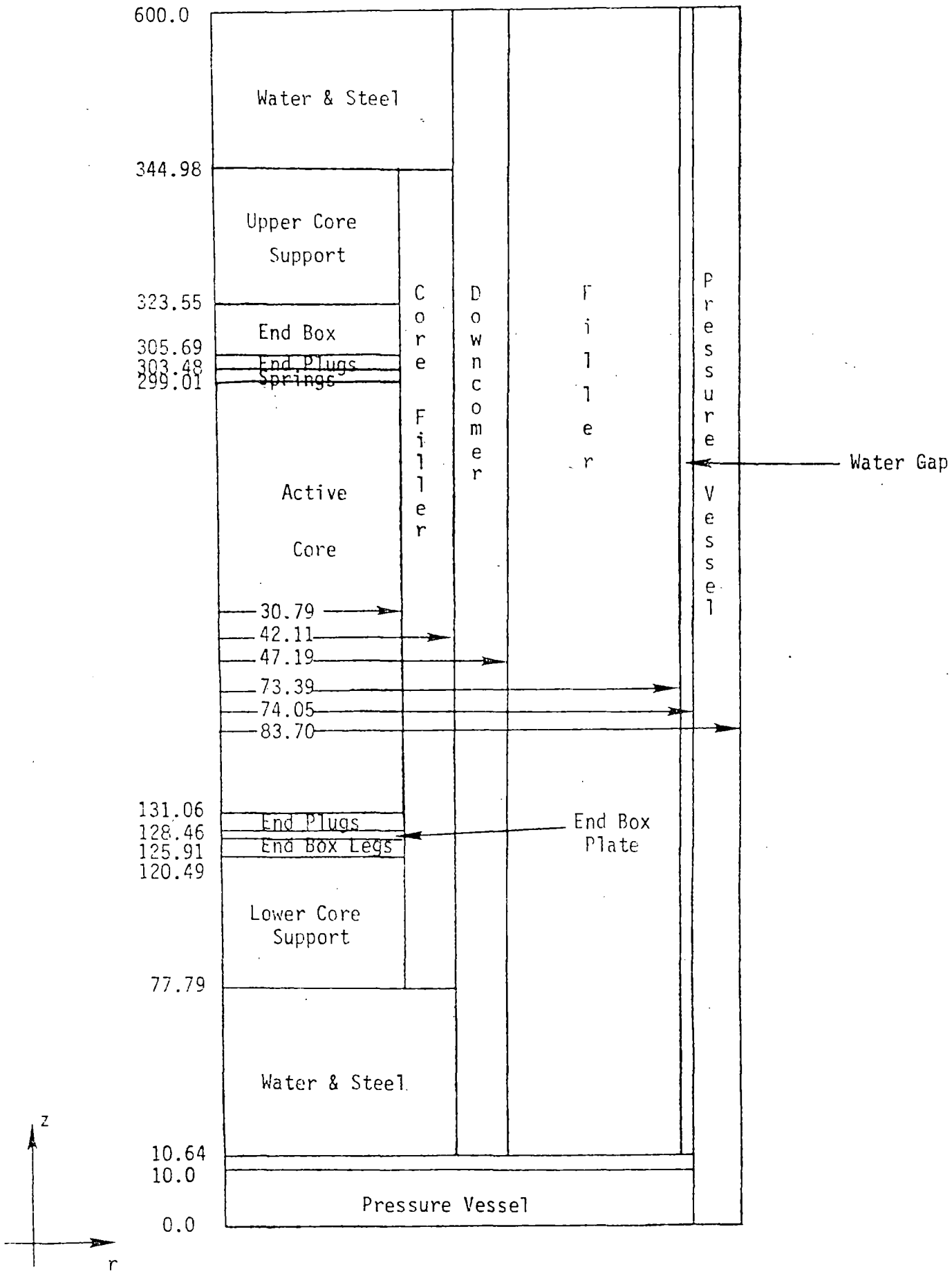

Figure 5. QAD Model for Axial Gamma Dose Rates

DRAFT D 9/11/80 TSF Doc. ID. 5174N

RESPONSE OF LOFT SPNDS TO REACTOR COOLANT DENSITY VARIATIONS DURING LOCA SIMULATIONS

by

*James P. Adams

Victor T. Berta

EG&G Idaho, Inc.
Idaho National Engineering Laboratory
Idaho Falls, Idaho 83415

*208-526-9148

ABSTRACT

The self-powered neutron detectors (SPND's) installed in the Loss-of-Fluid Test (LOFT) core have been shown to be very sensitive to local water density variations during two large-break loss-of-coolant experiments (LOCE's). Using the known SPND neutron sensitivity, calculated γ-flux attenuation factors, and calculated neutron fluxs, the local water density at the end of the initial LOCE L2-3 quench has been calculated from the SPND data to be 615 $\pm$ 80 Kg/m^3 in the central fuel assembly and 738 + 0 - 118 Kg/m^3 in the peripheral fuel assemblies. The potential use of self-powered detectors to monitor reactor vessel liquid level is discussed.

1. INTRODUCTION

Analysis of self-powered neutron detector (SPND) data taken during large break Loss-of-Coolant Experiments (LOCE's) L2-2 and L2-3 conducted in the Loss-of-Fluid Test (LOFT) facility has shown that these detectors are sensitive to local coolant density variations in the reactor core. These results provide a strong impetus for determining the applicability of self-powered nuclear flux detectors for reactor vessel liquid level measurements in pressurized water reactors (PWR's) during postulated loss-of-coolant accidents (LOCA's). This paper discusses the response of the SPNDs to core coolant density variations in the LOFT large break LOCE's and shows the potential application to reactor vessel liquid level measurements during small break LOCA's in PWR's.

Section 2 describes the LOFT experimental facility. The theoretical response of the SPND's to external radiation and the expected variance with moderator density are described in Section 3. Section 4 describes the response of these detectors to moderator density variations encountered in LOFT, LOCEs L2-2 and L2-3. Section 5 discusses implications for the use of similar detectors to monitor liquid level, and Section 6 summarizes the conclusions.

2. EXPERIMENTAL FACILITY

The LOFT facility is a 50-MW(t), volumetrically scaled PWR system designed to reproduce, both in time and approximate magnitude, the significant thermal and hydraulic events expected in a commercial PWR during a postulated LOCA. A schematic diagram of the LOFT facility is shown in Figure 1, and detailed descriptions of the facility and the scaling philosophy for its design are found in References 1 and 2, respectively.

Extensive instrumentation is used to characterize temperature, pressure, flow, densities, and nucleonics, during LOCE's conducted in the LOFT facility. The primary focus of this paper is on SPND's located in the core and used to measure local power density. There are four SPND's in the LOFT core, one located in each of four fuel assemblies. The detectors are centered at a height of 0.66 m above the bottom of the active core, which corresponds to the elevation of maximum core power density. Each detector consists of a 0.23-m-long by 0.19-mm-diameter emitter inside an Inconel collector which also forms the sheath, and is insulated with aluminum oxide.[3] The detector geometry is schematically depicted in Figure 2 and the radial locations of the detectors within the core are shown in Figure 3. The sheath is grounded to minimize the effects of external charge buildup due to external electron flux and the cable is constructed to compensate for external radiation as shown in Figure 2.

3. SPND RESPONSE TO DENSITY VARIATIONS

There are numerous articles in the literature[4-13] that describe the theory and experimental application of self-powered detectors. A brief description is given here of the response of these detectors to density variations in the surrounding environment, emphasizing the LOFT-design cobalt emitter SPND's.

The response of cobalt SPND's to neutron radiation is depicted schematically in Figure 4. A neutron is absorbed by a Co^{59} nucleus, forming an excited Co^{60} nucleus. De-excitation of the excited Co^{60} nucleus to its ground state results in the prompt emission of several capture γ-rays with energies ranging from 0.06 to 7.49 MeV.[6] The SPND prompt neutron signal is produced when these capture γ-rays interact with the emitter, creating Compton or photo-electrons which propagate to the sheath. A delayed signal subsequently results when the Co^{60}, now in its ground state, beta decays to N^{60} with a half-life of 5.26 years. The emitted beta particle also propagates to the sheath. In LOFT, this delayed signal does not build up due to the very short duration of reactor operation and, therefore, is neglected in this paper.

There is, in addition, a component of the SPND prompt signal due to Compton and photo-electrons created by externally originating γ-rays. These γ-rays come from various sources including fission in the fuel and neutron activation of the fuel and core structural materials. These γ-rays interact with the SPND emitter, insulator, and sheath, and the resulting net current is the difference between the current resulting from electrons (Compton or photo-electrons) propagating to the emitter and the current resulting from electrons propagating to the sheath.[12] For SPNDs with cobalt emitters, this net current is opposite in polarity to the signal produced by neutrons.[12,13]

The combined effect of the γ and neutron induced SPND currents is that during LOFT reactor power operations, the neutron flux dominates and the SPND output is positive. During shutdown conditions, especially just subsequent to reactor scram, the delayed γ-flux induced current dominates and the SPND output is negative (as shown in Figures 5 and 6). This is independent of moderator density variations. The net effect of varying core water density on the LOFT SPND output is discussed next.

The effect of decreasing the core water density (increasing the void fraction) on neutron flux is twofold. First, decreased water density results in negative core reactivity insertion due to the negative void coefficient of reactivity. This reduces the neutron multiplication and, hence, the neutron flux itself. Second, as the density decreases and approaches that of steam, the moderating efficiency drops, resulting in a reduction in the ratio of thermal to total neutron flux. Since the cobalt neutron absorption cross section is peaked at lower neutron energies, this effect combines with the first to reduce the SPND neutron current.

The effect of decreasing core water density on the γ flux is, to first order, simply that of decreased absorption or attenuation resulting in a increased γ flux and SPND γ current. Since the SPND γ current is opposite in polarity to the neutron current, this change (increase) in current behaves like a decrease in neutron current. Thus, the combined effect of reduced SPND neutron current and increased γ current is decreasing (more negative) SPND current with decreasing water density. When the water density increases in the core (that is, during quench or reflood) the SPND current increases (that is, becomes more positive). Thus, the LOFT SPND's are expected to be sensitive to core water density variations. A comparison of LOFT SPND output with core water density variations is made in the Section.[4]

4. RESPONSE OF SPND'S TO DENSITY VARIATIONS IN LOFT LARGE BREAK LOCE'S L2-2 AND L2-3

LOFT LOCE's L2-2 and L2-3 simulated complete double-ended offset shear breaks of a primary coolant reactor vessel inlet pipe in a commercial PWR operating at two different power levels. The results of these experiments have been reported in References 14, 15, 16, and 17 and only those results germane to the response of the SPND's is discussed in this paper.

The following core water density scenario is common to both experiments. After the break was initiated, the system pressure rapidly dropped to saturation conditions. The core flow reversed and voids formed resulting in a rapid decrease of core liquid density. There were indications of superheat, especially in the central fuel assembly, within 3 s after LOCE initiation. At approximately 4 s after the break, the core flow again reversed and water from the intact loop was circulated up through the core, quenching the fuel rods which had gone into departure from nucleate boiling (DNB) as seen in Figures 7 and 8. This quench was core-wide in extent (as was the DNB) as evidenced by the in-core thermocouples. Subsequent DNB/quench cycles were noted in both experiments, though these were not core-wide as was the initial cycle. These cycles continued until the reflood phase was initiated at approximately 35 s. During reflood, core flow and water level oscillations occurred as emergency core coolant system (ECCS) water cooled the core to near ambient temperatures (see Figures 9 and 10). SPND behavior during the initial core-wide quench and during reflood is examined in the following two subsections.

4.1 SPND Behavior During Initial Core-Wide Quench

The core-wide quench observed during LOCE's L2-2 and L2-3 was caused by a rapid increase in water density in the core. As indicated in Section 3, an increase in core water density increases the SPND neutron

current and decreases the SPND γ current resulting in an increase in total SPND current. This was noted in all SPND outputs, as shown in Figures 7 and 8. An analysis, described below, was made of the magnitude of the SPND "step change" in LOCE L2-3 to verify that it was responding to water density changes and not to other, unknown, stimuli. Since there was no direct measurement of the local water density at the SPND location, the density was calculated from the SPND data and then checked for consistency with other data.

The total SPND current, I_t, consists of two components, the neutron current, I_n, and the γ current, I_γ as follows:

$$I_t = I_n + I_\gamma$$

where

$$I_n = S_n \phi_n$$

S_n = the known[3] neutron sensitivity

ϕ_n = the neutron flux.

Thus, prior to the quench,

$$I_{ti} = I_{ni} + I_{\gamma i}$$

and subsequent to the quench,

$$I_{tf} = I_{nf} + I_{\gamma f}$$

where

Subscripts i and f are prequench and postquench conditions, respectively. Values for the total SPND current, I_{ti} and I_{tf}, were measured during the experiment.

The postquench neutron flux was calculated as a function of time after LOCE initiation and for two values of water density. The Computer Program PDQ-7-CCCm[a], assuming homogeneous water density and LOCE L2-3 core conditions (that is, pre-LOCE power operations, boron concentration), was used. The results from this computer calculation are presented in Table I.

It was assumed that $I_{ni} << I_{\gamma i}$. This assumption is based on the prequench voiding in the core which greatly reduced the thermal neutron flux. A calculation, assuming a pre-LOCE neutron energy distribution and twice the delayed neutron source flux, showed that

$$\frac{I_{ni}}{I_{ti}} < 0.05.$$

Thus,

$$I_{ti} = I_{\gamma i}$$

A calculation of the attenuation of the γ flux as a function of water density was made using the Computer Program ANISN[b], again assuming homogeneous water density. These results are summarized in Table II. From these results, $I_{\gamma f}$ was calculated as a function of the postquench water density by:

$$I_{\gamma f} = A(\rho)\, I_{\gamma i}$$

or

$$I_{cf} = A(\rho)\, I_{ti}$$

where

ρ is the postquench water density

Thus,

$$I_{tf} = S_n\, \phi_{nf}(\rho) + A(\rho)\, I_{ti}$$

Since no simple mathematical expression exists for $\phi_{nf}(\rho)$ and $A(\rho)$, the correct value of ρ was found by iteration, using ρ as the independent variable. For the central SPND, the resultant values for water density, final neutron flux and γ attenuation are:

$$\rho = 615 \pm 80 \text{ kg/m}^3$$
$$\phi_{nf}(\rho) = 11.07 \pm 3.0 \times 10^{11} \text{ n/cm}^2\text{s, and}$$
$$A(\rho) = 0.95, \text{ respectively.}$$

For the peripheral SPNDs, these values are:

$$\rho = 738 \,{}^{+\,0}_{-\,118} \text{ kg/m}^3$$
$$\phi_{nf}(\rho) = 6.965 \,{}^{+\,0}_{-\,1.9} \times 10^{11} \text{ n/cm}^2\text{s, and}$$
$$A(\rho) = 0.93, \text{ respectively.}$$

As indicated by the results, the resultant water density indicated in the outer fuel assembly was higher than that in the central fuel assembly. Since the central fuel assembly has a higher stored thermal energy than the outer assemblies, it would require more heat removal (and, hence, more

flashing of water to steam) to quench, resulting in a higher void fraction or lower water density. This is consistant with the analysis. In addition, a calculation of average core water density using reactor vessel liquid mass inventory calculated from mass flows into and out of the reactor vessel during the quench indicates that average core densities as high as 700 kg/m^3 could exist at this time. Water density calculated using the SPND data is consistant with the liquid mass inventory data, confirming the assumption that the SPNDS were responding to water density variations during the quench.

4.2 SPND Behavior During Reflood

As the cold ECCS water was injected into the core, the stored thermal energy flashed the water to steam and the buildup of pressure due to steam generation expelled the water from the core. This cycle was repeated with a frequency of approximately 1/3 Hz until sufficient core thermal energy had been removed and the core was reflooded. A discussion of this phenomenon, which has also been measured in other facilities, is found in Reference 18.

This oscillation in water density was detected as expected by the LOFT SPND's during LOCE's L2-2 and L2-3. Figures 9 and 10 depicts the phenomena as detected by momentum flux transducers in the reactor vessel downcomer and the central fuel assembly SPND during LOCE's L2-2 and L2-3, respectively.

5. USE OF SELF-POWERED DETECTORS TO MONITOR WATER LEVEL

Based on the foregoing results, it is expected that self-powered detectors (SPD's) should also be capable of detecting water level changes during small break LOCA's. Due to the quasi steady state nature of small break LOCA's, there is a well defined, stratified water-steam interface in the reactor vessel. As this interface propagates past the SPD, the local neutron and γ fluxes are affected and this effect should be sensed by the detector. Thus, an axial string of such detectors installed in the reactor vessel should be able to map the changing water level, providing a measurement of reactor vessel liquid level.

There are, however, fundamental differences between the radiation and hydraulic environment which was present in the reactor vessel during LOCE's L2-2 and L2-3 and that expected during small break LOCA's. As an example, during small break LOCA's, the reactor vessel liquid level is expected to decrease slowly. By the time core uncovery results (estimated to be thousands of seconds after reactor shutdown), the neutron flux would be negligible and the γ flux would dominate the detector output. In order to take advantage of this, a detector with enhanced sensitivity to γ flux should be used (that is, one with a platinum emitter). Such detectors respond to external neutron and γ radiation in a manner similar to cobalt SPNDs, but because of the higher atomic number (78 for platinum versus 27 for cobalt) they are more sensitive to γ flux and have a net positive γ current with respect to the neutron current.

Because of these differences, the results of LOCE's L2-2 and L2-3 cannot be directly applied in a small break LOCA scenario. Experimental data to quantify the SPD sensitivity to reactor vessel liquid level variations during small break LOCA's are required before and should be obtained in order that the use of SPD's to monitor reactor vessel water level can be recommended for commercial PWR's.

6. CONCLUSION

It is concluded that the LOFT SPND's are sensitive to local water density variations such as those which occurred during LOCE's L2-2 and L2-3. This conclusion is based on the response of these detectors during the core-wide quench and reflood phases of these LOCE's

It is further concluded that the use of SPND's to monitor reactor vessel water level is promising and should be pursued.

7. REFERENCES

1. D. L. Reeder, LOFT System and Test Description (5.5 ft. Nuclear Core 1 LOCEs); NUREG/CR-0247, TREE-1208 (July 1978).*

2. L. J. Ybarrondo, et al., "Examination of LOFT Scaling" 74-WA/HT-53, Proceedings of the 95th Winter Annual Meeting of the ASME, New York, N.Y., (August 1974).

3. C. D. Lassalin, LOFT Experimental Measurements Uncertainty Analysis Vol. VII, LOFT Self-Powered Neutron Detector Uncertainty Analysis, NUREG/CR-0169, Vol. VII, TREE-1089 (August 1978).*

4. O. Strindehag, "Response of Self-Powered Gamma Detectors," Atomkernenegie (ATKE), Vol. 17, pp. 267, (1971).

5. G. F. Lynch, et al., "Characterization of Platinum Self-Powered Detectors," IEEE Transactions on Nuclear Science, Vol. NS-24, No. 1, pp. 692, (February 1977).

6. J. A. Sovka, Response of Cobalt Neutron Flux Detectors, AECL-3368 (June 1969).

7. R. G. Shields, "A Platinum In-Core Flux Detector," IEEE Transactions on Nuclear Science, Vol. NS-210, pp. 603, (1973).

8. N. P. Goldstein, "A Calculation of the Gamma-Ray Response of Self-Powered Detectors Using Monte Carlo Methods," Transactions of the American Nuclear Society, Vol. 18, pp. 303, (June 1974).

9. N. P. Goldstein, "A Comparison Between Calculated and Measured Neutron Sensitivities of a Pt Self-Powered Detector," IEEE Transactions of Nuclear Science, Vol. NS-25, No. 1, pp. 292, (February 1978).

10. A. C. Mao and J. S. Hewitt, "Detailed Analysis of Self-Powered Detector Response by Monte Carlo Methods," Transactions of the American Nuclear Society, Vol. 24, pp. 390, (1976).

11. W. Jaschik and W. Seifritz, "Model for Calculating Prompt Response Self-Powered Neutron Detectors," Nuclear Science and Engineering, Vol. 53, pp. 61, (1974).

12. H. D. Warren and N. H. Shah, "Neutron and Gamma Ray Effects on Self-Powered In-Core Radiation Detectors," Nuclear Science and Engineering, Vol. 54, pp. 395, (1974).

13. H. Boch, Miniature Detectors for Reactor Incore Neutron Flux Monitoring, Atomic Energy Review, 14, 1, (1976).

14. M. McCormick-Barger, Experiment Data Report for LOFT Power Ascension Test L2-2, NUREG/CR 0492, TREE-1322 (February 1978).*

15. P. G. Prassinos, B. M. Galusha and D. B. Engelman, Experiment Data Report for LOFT Power Ascension Experiment L2-3, NUREG/CR-0792, TREE-1326 (July 1979).*

16. D. L. Reeder, "Blowdown Hydraulic Influence on Core Thermal Response in LOFT Nuclear Experiment L2-3," Transactions of the American Nuclear Society, Vol. 33, pp. 494, (November 1979).

17. J. H. Linebarger, D. L. Batt and V. T. Berta, "LOFT Isothermal and Nuclear Experiment Results," Proceedings of the 14th Intersociety Energy Conversion Engineering Conference, Vol. II, pp. 1518, (August 1979).

18. Y. L. Cheung and P. Griffith, Gravity Reflood Oscillations in a Pressurized Water Reactor, NUREG/CR-1314 (February 1980).*

*Available for purchase from the NRC/GPO Sales Program, U.S. Nuclear Regulatory Commission, Washington, D.C., 20555, and the National Technical Information Service, Springfield, VA 22161

TABLE I. NEUTRON FLUX AS A FUNCTION OF MODERATOR DENSITY - PDQ-7-CCCM CALCULATION

Moderator Density, ρ (kg/m^3)	Neutron Flux, Q_n (ρ) ($n/m^2 - s$)
500.0	6.659 E11
615.0	1.107 E12[a]
683.0	1.367 E12

a. This value for φr is a linear interpolation between the two other values based on density.

TABLE II. GAMMA FLUX ATTENUATION AS A FUNCTION OF MODERATOR DENSITY - ANISN CALCULATION

Moderator Density, ρ Kg/m^3	Attenuation Factor, $A(\rho)$ [a]
64.6	1.0
185.1	0.99
426.0	0.96
615.0	0.95[b]
667.0	0.94

a. $A(\rho) = \frac{\phi_\gamma(\rho)}{\phi_\gamma(\rho_0)}$

where

$\phi_\gamma(\rho)$ = γ - Flux at density = ρ

$\phi_\gamma(\rho_0)$ = γ - Flux at density = ρ_0 = density of staurated steam.

b. This value of A is a linear interpolation based on density.

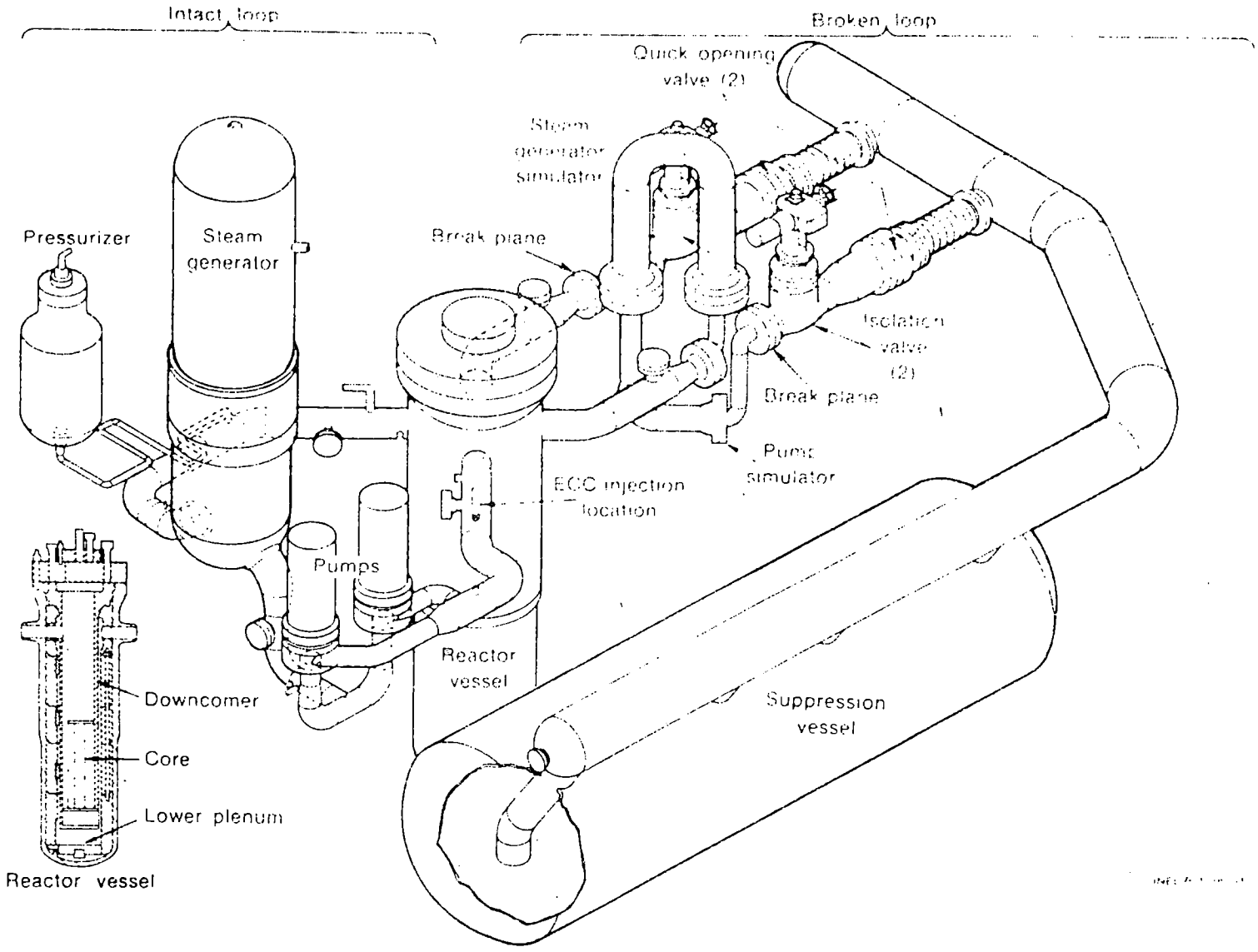

FIGURE 1: Axonometric Projection of the LOFT System

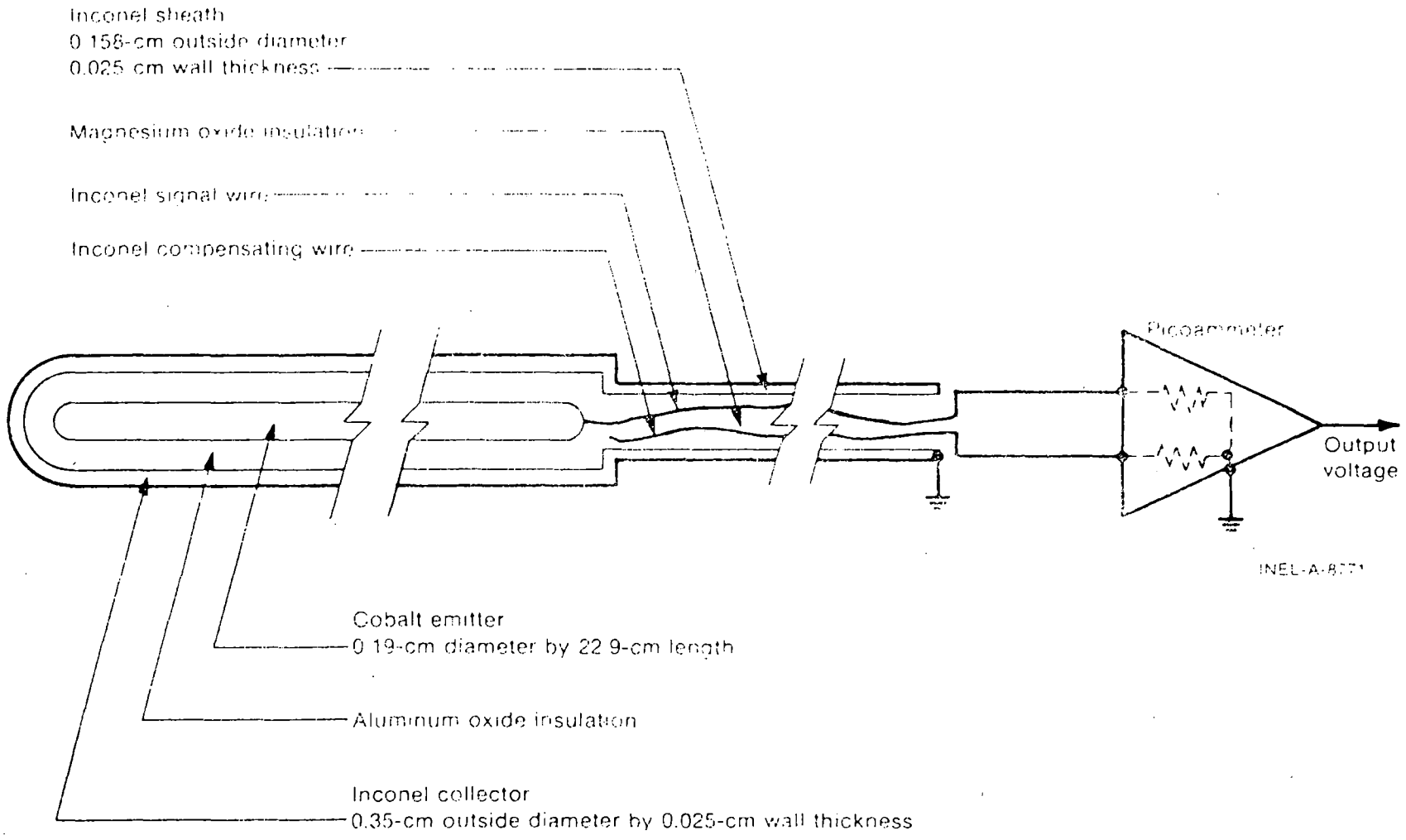

FIGURE 2: Schematic Diagram of LOFT SPND and Cable

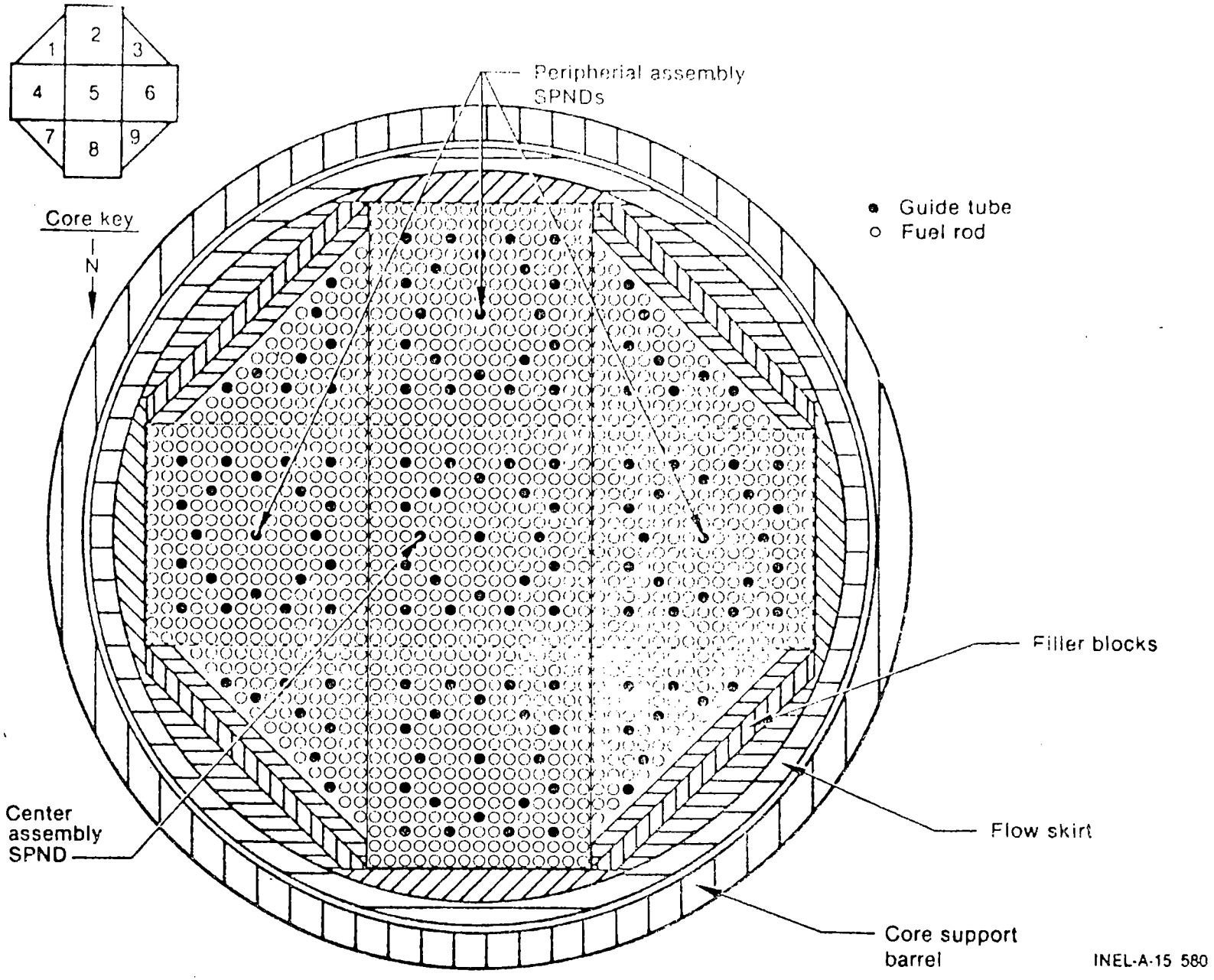

FIGURE 3: LOFT Core Map Showing the Radial Location of the SPND's

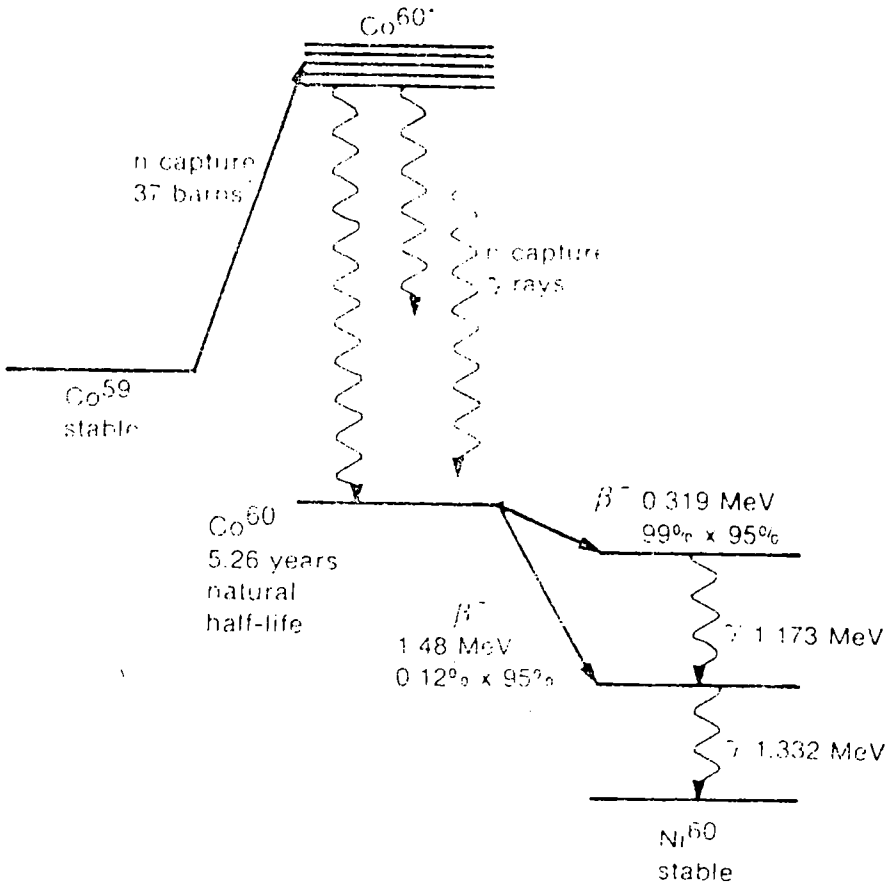

FIGURE 4: Response of LOFT SPND's to External Neutron Radiation

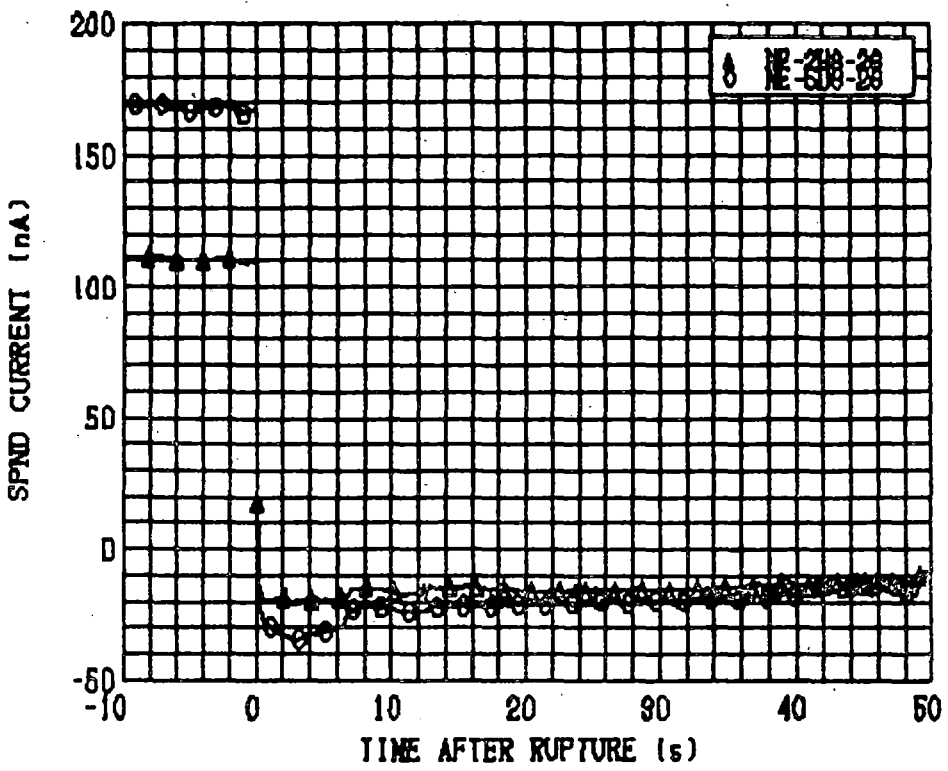

FIGURE 5: LOFT Central and Peripheral SPND Output During LOCE L2-2

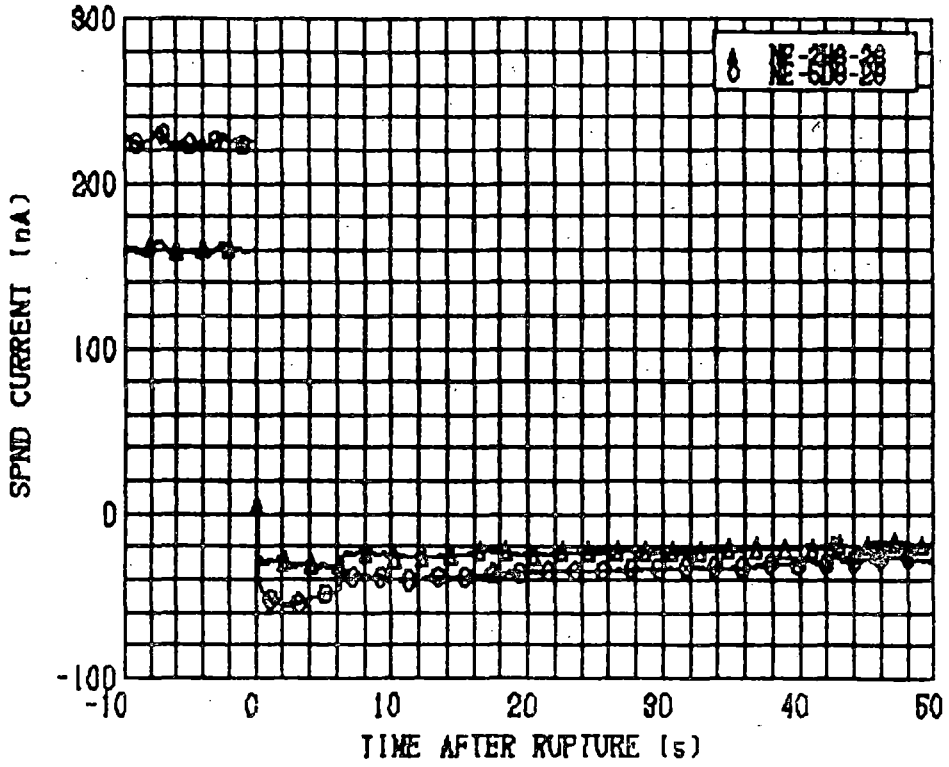

FIGURE 6: LOFT Central and Peripheral SPND Output During LOCE L2-3

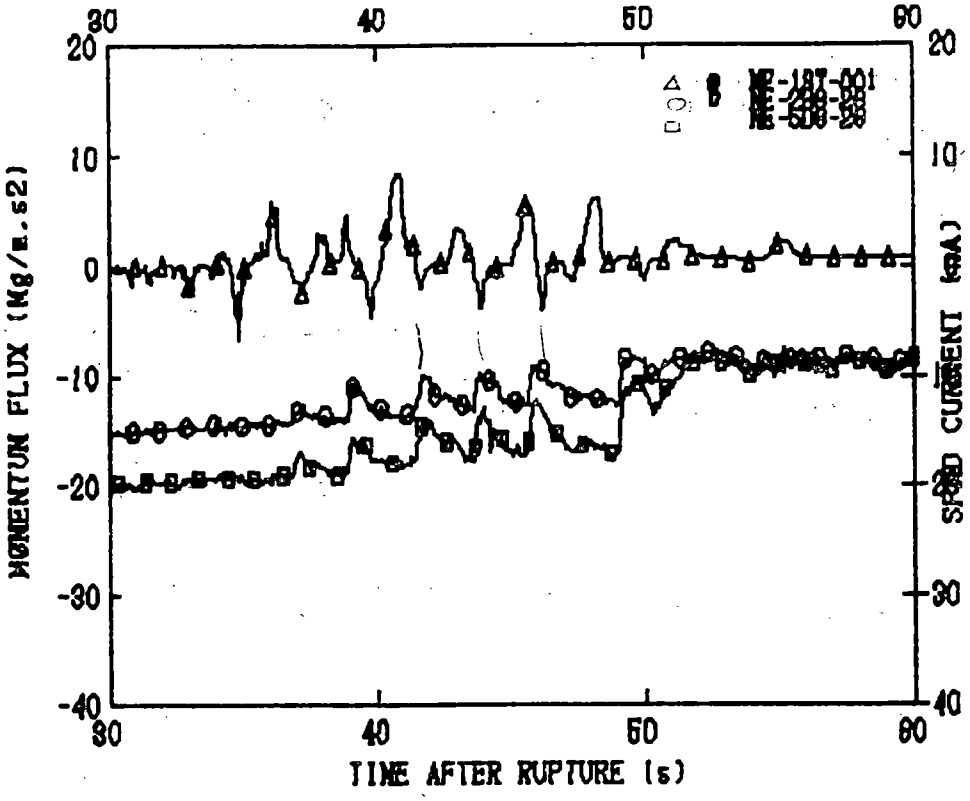

FIGURE 7: LOFT Central and Peripheral SPND Output Compared With an Adjacent Fuel Cladding Thermocouple During LOCE L2-2 Quench

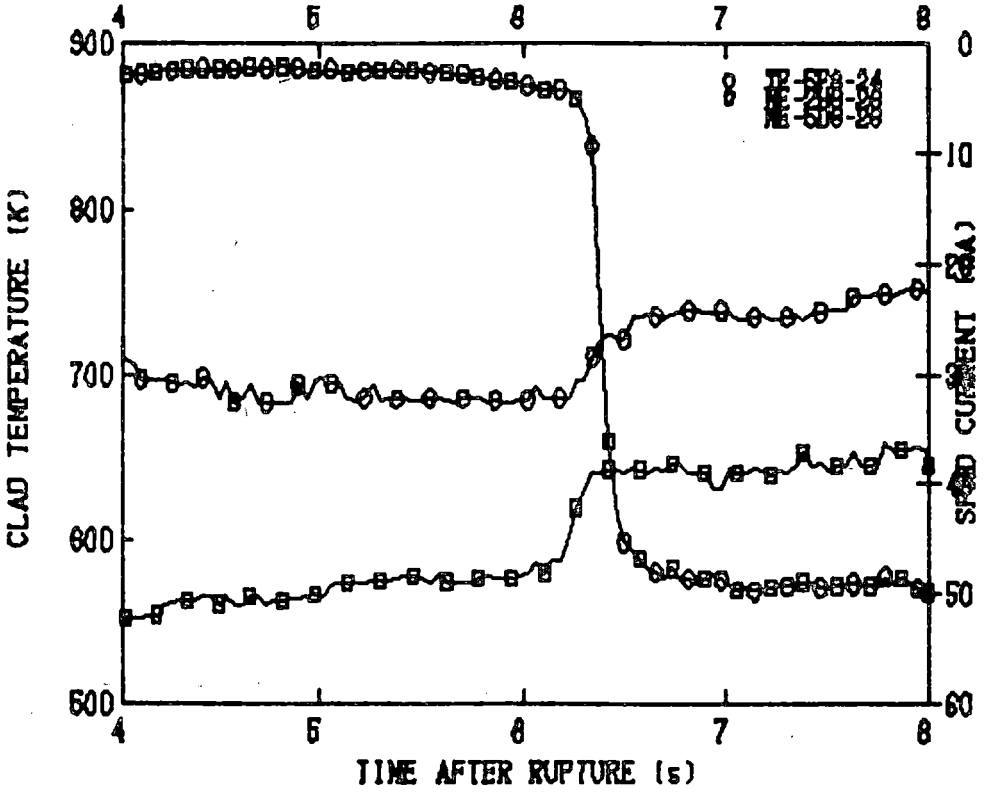

FIGURE 8: LOFT Central and Peripheral SPND Output Compared With an Adjacent Fuel Cladding Thermocouple During LOCE L2-3 Quench

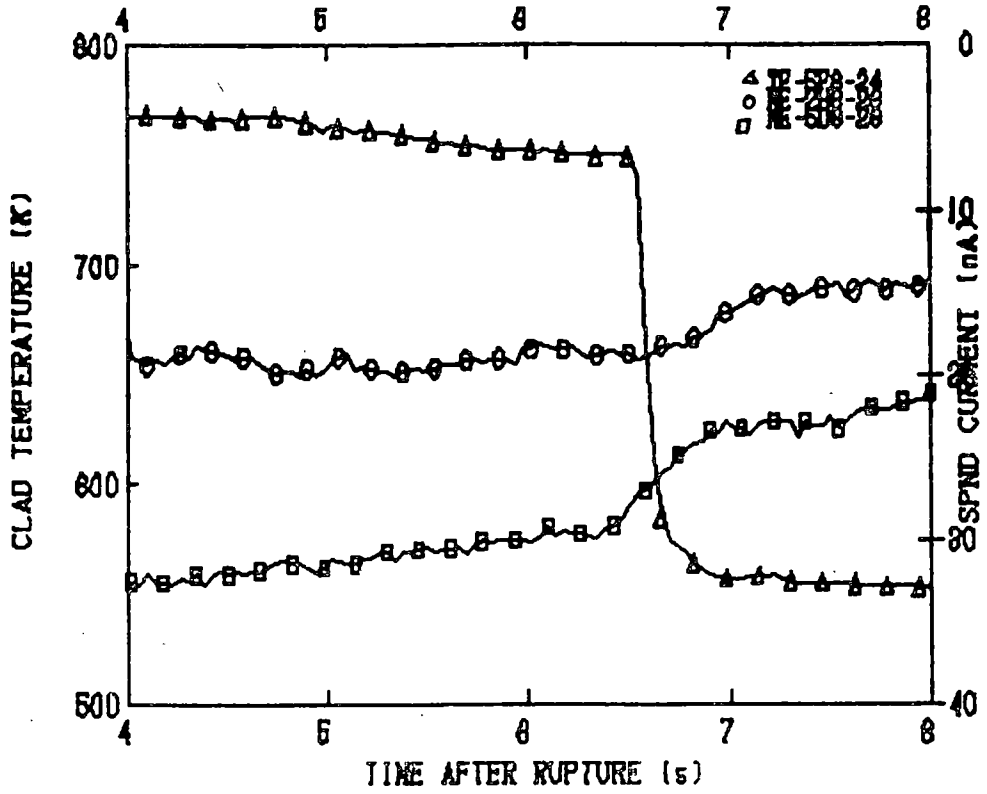

FIGURE 9: LOFT Central and Peripheral SPND Output Compared With the Downcomer Fluid Momentum Flux During LOCE L2-2 Reflood

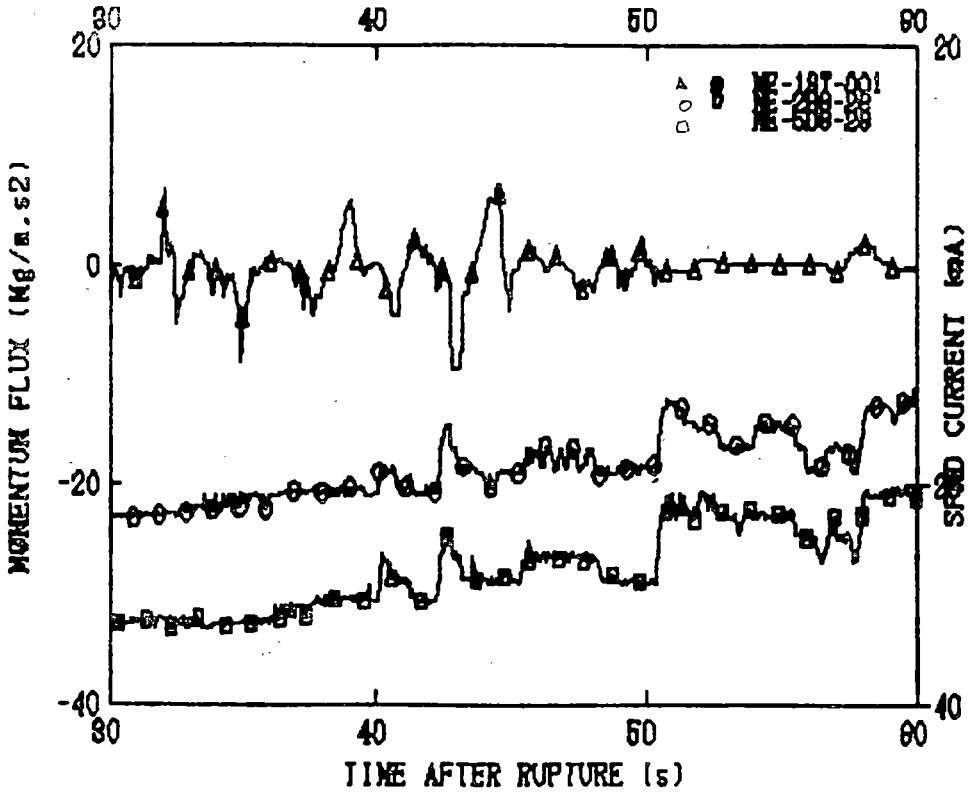

FIGURE 10: LOFT Central and Peripheral SPND Output Compared With the Downcomer Fluid Momentum Flux During LOCE L2-3 Reflood

J. WOLF, E.G. & G. IDAHO, INC.

IN CORE LIQUID LEVEL DETECTION

- ONLY NON- AND SEMI-INTRUSIVE TECHNIQUES CONSIDERED
- INTRUSIVE TECHNIQUES CONSIDERED IMPRACTICLE

METHODS CONSIDERED

- ELASTIC VESSEL DEFORMATION USING LASER INTERFEROMETRY
- NOISE ANALYSIS OF OPTICAL SPECTRUM
- GAMMA DETECTION USING COVE GENERATED SIGNAL
- NEUTRON DETECTION
- CERENKOV RADIATION DETECTOR

ELASTIC DEFORMATION AND OPTICAL NOISE ANALYSIS

FAVORABLE ASPECTS

- NON INTRUSIVE
- SMALL DISPLACEMENT MEASUREMENT
- TECHNIQUE DEVELOPED FOR OTHER APPLICATIONS

NON FAVORABLE

- MUST EXTRACT DEFORMATION SIGNAL FROM NOISE
- DEVELOP RADIATION RESISTANT OPTICS
- CONSIDERABLE APPLICATION ENGINEERING
- VIBRATION PROBLEM
- COMPLETELY NEW APPLICATION

CORE GAMMA DETECTION

FAVORABLE ASPECTS

- USES EXISTING COMMERCIAL PLANT INSTRUMENT
- NON SENSITIVE TO NEUTRON SCATTERING OR GAMMA-N REACTIONS
- USES EXISTING GUIDE TUBES
- STANDARD DENSITOMETER TECHNIQUES - ION CHAMBER
- COULD BE EXTERNAL TO CORE OR IN INSTRUMENT STALK
- VESSEL GAMMAS INCREASE SENSITIVITY

NON FAVORABLE

- CAN BE IMPLEMENTED ONLY AT A FUEL CHANGE
- MAY REQUIRE REMOVAL OF FLUX MAPPING SPND'S
- ADDITIONAL ELECTRICAL CABLING

NEUTRON DETECTION

FAVORABLE ASPECTS

- NON INTRUSIVE
- DETECTORS EXIST, BF_3
- STANDARD COUNTING TECHNIQUES FOR FAST NEUTRONS

NON-FAVORABLE

- LOW COUNT RATE
- NEUTRON STREAMING - FALSE WATER LEVEL READING
- BORON CONTENT MAY EFFECT COUNT RATE
- NEW APPLICATION

CERENKOV RADIATION DETECTOR

FAVORABLE ASPECTS

- NO CABLES

NON FAVORABLE

- INTENSITY MEASUREMENT
- TRANSMIT LIGHT FROM GUIDE TUBE
- CERENKOV INTENSITY AS A FUNCTION OF LEVEL IS UNKNOWN
- RADIATION HARDENED OPTICS NEEDED
- COMPLETELY NEW TECHNIQUE
- RESEARCH AND DEVELOPMENT NEEDED

RECOMMENDED METHOD

- GUIDE TUBE GAMMA DETECTION MEASUREMENT

PROPOSAL FOR A NON-INVASIVE LIQUID LEVEL GAUGE FOR REACTOR PRESSURE VESSELS

by

M. A. Schultz
Professor
Nuclear Engineering

W. A. Jester
Associate Professor
Nuclear Engineering

and

I. B. McMaster
Deputy Director
Breazeale Nuclear Reactor
The Pennsylvania State University

June 1979

Proposal

for

A Non-Invasive Liquid Level Gauge for Reactor Pressure Vessels

by

M. A. Schultz, W. A. Jester and I. B. McMaster
Nuclear Engineering Department
The Pennsylvania State University

I. Introduction

Analysis of the accident at Three Mile Island has shown that it is important that all existing water-cooled power reactors have a pressure vessel water level gauge. This device should be able to detect the presence and size of a gas bubble, preferably not disturb existing equipment, and essentially be a non-invasive add-on package.

This proposal is in two parts. First, the authors propose to build a simulated pressure vessel section involving the Penn State University's Breazeale Reactor Facility. This Facility, based upon a TRIGA reactor, would provide a realistic radiation environment in which any measuring instrument must successfully operate. A simulated pressure vessel section containing a thick steel wall section would be constructed to serve as an instrument platform and would be built to enable creation of various sized air bubbles in the radiation environment. This Facility would be used by the authors in the second phase of this proposal, but it would also be available to the Nuclear Regulatory Commission to test other level gauge concepts and instruments.

The second portion of this proposal involves the testing of certain gauging concepts conceived by the authors whereby the in-core radiation would be employed in a non-invasive manner to define the pressure vessel water level.

II. Background

Because of the availability of large quantities of gamma rays in and around a reactor vessel, it is a reasonable consideration to make use of these photons to provide the operation's personnel with continual or on-demand data as to the coolant water level in the pressure vessel.

One cannot readily use commercially-available gamma ray level measuring instruments because of the varying nature of the gamma field as a function of core and primary loop conditions and because of the existing design of the primary containment areas of nuclear power plants. Conventional gamma ray level measurement gauges utilize either the concept of photon attenuation or photon backscatter by the liquid phase. Those gauges, using a fixed detector-source system, require the establishment of a precise radiation intensity-liquid level calibration relationship to provide accurate liquid level information. Varying radiation fields would, of course, negate the possibility of any such calibration. Other types of radiation level gauges require either the vertical movement of the radiation source, the detector, or both, or require the use of a vertical series of fixed detectors and/or sources to detect the location of the gas-liquid interface. While such systems could be designed into future power reactors, the physical conditions in and around existing reactor pressure vessels would make it difficult to install such devices. The situation is not unlike that encountered in diagnostic nuclear medicine wherein the patient has received a radioactive pharmaceutical which concentrates in several places in the body and the doctor, in a non-invasive manner, must obtain data from the critical organ in the presence of this interference background, often of equal or higher intensity.

Therefore, one must look for new approaches in order to design a non-invasive gamma ray liquid level gauge which can 1) be readily installed in existing systems, 2) will not occupy much of the precious space near the pressure vessel, and 3) can successfully perform its function under the wide range of radiation conditions which the gauge detector could encounter during both routine and emergency conditions. The primary method proposed in this work is similar in a number of ways to that used in diagnostic scanning, already employed by the nuclear medical profession.

III. Reactor Vessel Irradiation Field

In order to use the existing radiation field in a reactor pressure vessel to provide water level information, one must know the type, energy, source, and location of the radiation which can reach the liquid level detection monitors. One must, of course, first know this information in order to construct an experimental facility to evaluate the effectiveness and accuracy of such later-designed detection equipment. Described here is a list of the various radiation field conditions which may be encountered in a power reactor pressure vessel under different normal and emergency conditions.

Condition 1: An operating core

In this condition, the major radiation field consists of prompt fission and neutron capture gamma rays produced in and around the core. The intensity of this radiation source will be approximately proportional to the reactor power level and will remain constant in both intensity and energy distribution at steady state power conditions. There will also be lesser amounts of fission product radiation which will gradually increase in intensity and change its energy distribution with core life as long-lived fission products are accumulated in the core. In lesser amounts are the neutron activation products of metals such as zirconium, cobalt, nickel, and chromium produced in core components.

The second major source of radiation is the primary coolant water. This radiation is induced by the neutron activation of the primary coolant water itself. It includes the 7-second half-life ^{16}N, which emits high energy (6 and 7 MeV) photons and 4-second half-life ^{17}N, which is a neutron

emitter. The intensities of these radiations will also be a direct function of reactor power level.

Also in the primary coolant water will be fission products, primarily the xenon and krypton fission gases and possibly lesser amounts of iodine and cesium fission products. The amounts of these radionuclides in the water will depend upon the current integrity of the fuel rods and the rate at which the fission products are being removed by the primary water clean-up systems.

There will also be present lesser amounts of neutron activation products dissolved and/or suspended in the coolant water which come from various locations in the primary loop, and are activated as the water passes through the core.

The third major radiation field source is the crud which is deposited and gradually builds up on the metal surfaces of the primary loop. The crud activity comes primarily from neutron activation products and is mainly ^{60}Co, ^{58}Co, and lesser amounts of other metal neutron activation products from corrosion processes not completely suppressed by water chemistry.

Condition 2: A core shut-down

When the core is shut down, there will no longer be any prompt fission or neutron capture gamma rays. Thus the radiation being emitted from the core is dominated by the decaying fission products. This field will reduce in intensity and change in photon composition as the longer-lived fission products begin to dominate the gamma spectrum. The neutron activation products in the core material will also decrease slowly with time.

There will no longer be ^{16}N and ^{17}N in the water, but there will still be the dissolved and suspended fission and neutron activation products, with little or no additional fission products entering the water from the core. Thus the suspended and/or dissolved radionuclides in the water can be significantly reduced by the primary coolant clean-up systems.

The crud activity on surfaces will remain and will change slowly with time because of the relatively long half-lives of these radionuclides. Significant reductions can occur if some type of chemical cleaning is employed.

Condition 3: A core shut down with significant fuel pin damage

In this situation, conditions are similar to condition 2, except that there can be significantly larger amounts of the more mobile fission products in the water. If fuel melting has taken place, there will also be some transuranic radionuclides in the coolant water.

Condition 4: Core at shut down with a bubble of some size at the top of the reactor pressure vessel

This situation would be the same as situation 2 or 3 except that the radionuclides in the bubble will have a significantly different composition and concentration of the radioactive material than the primary water with which it is in contact. There will be a build-up of the fission gases of xenon and krypton in the gas bubble as well as lesser amounts of gaseous organic and inorganic radioiodide compounds, but no significant amounts of any of the other radionuclides. With time, an equilibrium condition should establish itself, with the relative concentrations of these gases in water and the gas bubble dependent on their distribution coefficient. At the top

of the reactor core, the intensity from the radiation in the coolant water should decrease as the water level drops while the radiation from the crud deposits should increase since the gas will have about three orders of magnitude lower attenuation coefficient than the displaced coolant water.

To design a successful instrument, one must take most of these varying effects and conditions into consideration.

IV. Simulated Pressure Vessel Design Considerations

The simulated environment for instrument testing would be provided by the PSU TRIGA reactor. This reactor, which is capable of attaining a power level of 1 MWt (not too different from a shutdown power reactor), normally rides on a movable bridge in a large open pool.

The test vessel would be constructed of aluminum with one half of the top of the vessel covered with steel plate 6-inches thick to simulate actual pressure vessel wall thickness. This test vessel section is to be rectangular (approximately 1' x 4') in cross section and sealed on the top end. It is intended to represent a vertical slice corresponding to a section of the head top of an actual reactor pressure vessel. (see Fig. 1) This simulated pressure vessel will be two-dimensional, supported on a movable bridge over the PSU reactor pool, and will extend approximately two to three feet into the pool water. (see Fig. 2) Access ports on the top of the vessel will permit insertion of instruments, rods, and/or tubes to facilitate measurements or to simulate control rod shafts and/or other obstructions. Instrument thimbles attached to the side of the test vessel will provide a means for attaching radioactive sources to simulate "hot spots." The primary detector would be mounted to "look" through the 6-inch thick steel top. A boiler sight glass on one side of the test vessel will

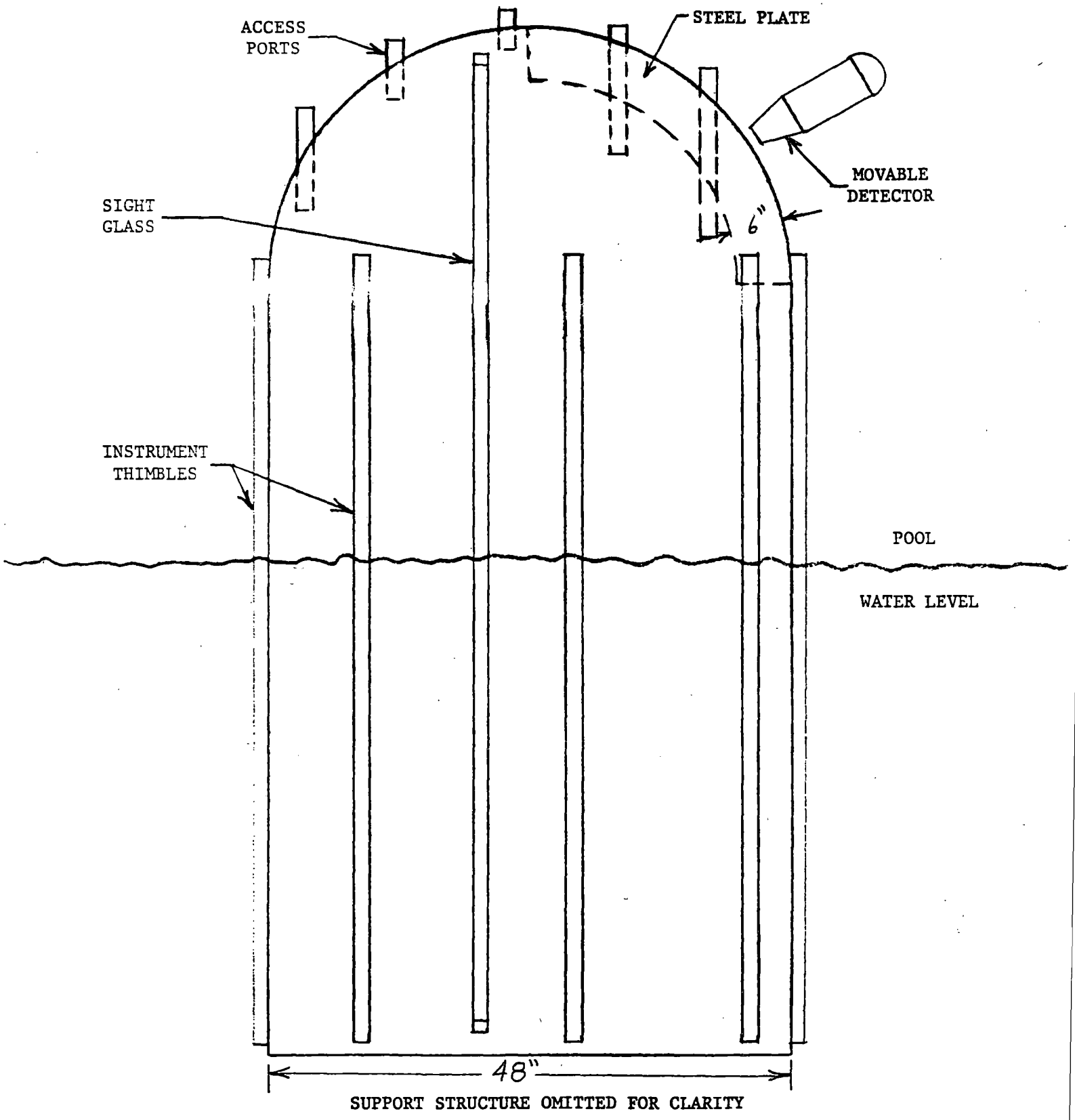

Figure 1. Test Vessel, Side View

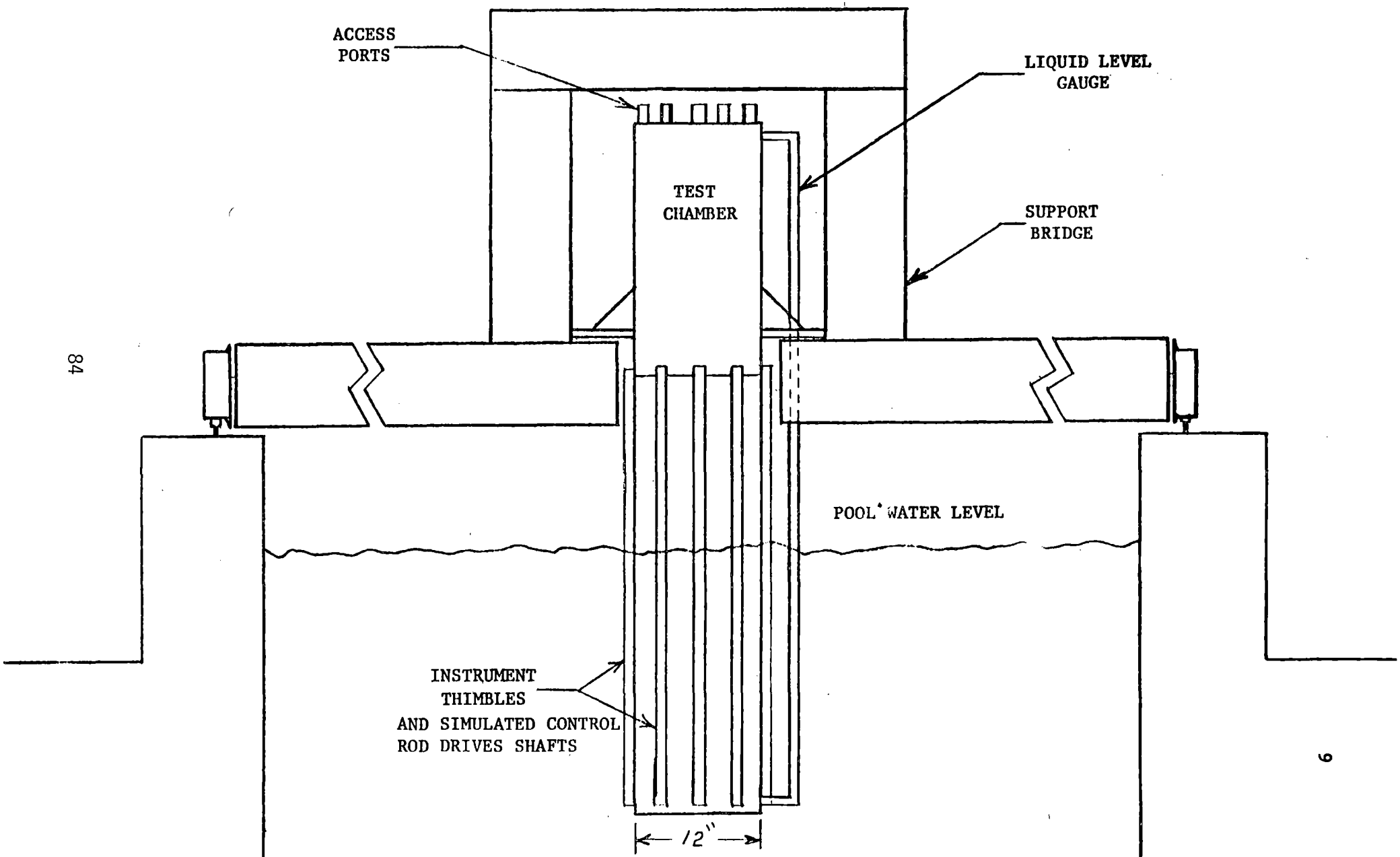

Figure 2. Vessel Mounted on a Movable Bridge

provide liquid level information from the inside of the test vessel. The liquid level inside the test vessel can be varied by providing either pressure or vacuum to one of the access ports on top of the vessel.

Radioactivity inside the test vessel will be provided by pumping reactor pool water, containing radioactive nitrogen-16, nitrogen-17, and argon-41, from immediately above the operating reactor core into the bottom of the test vessel. (see Fig. 3) The concentration of these radioisotopes can be controlled by controlling the pumping time and the pumping rate. Since both the test vessel and the reactor will be mounted on wheels on the same track, the distance between them can be varied, allowing one to position the reactor in the line of sight of the detector mounted on top of the test vessel.

Sufficient pipe and tubing will be provided to supply air to the system such that a turbulent interface can be simulated. In this way, the effects of a smooth level transition as well as a "frothy" one can be observed by the detectors.

The PSBR core itself will serve as a source of prompt fission and capture gamma rays when operating at power levels up to 1 MW thermal. When shut down, it can provide a source of decaying fission product gamma rays. As stated previously, by drawing irradiated water from the operating reactor into the two dimensional pressure vessel, a radioactive volume of water can be produced from the neutron activation products of ^{16}N, ^{17}N, and ^{41}Ar. The inert gas, ^{41}Ar, produced by the neutron activation of dissolved air in the pool water, will simulate the presence of the xenon and krypton fission gases in power reactor coolant water. If the test pressure vessel is operated with an air bubble at its top, there will be a continual

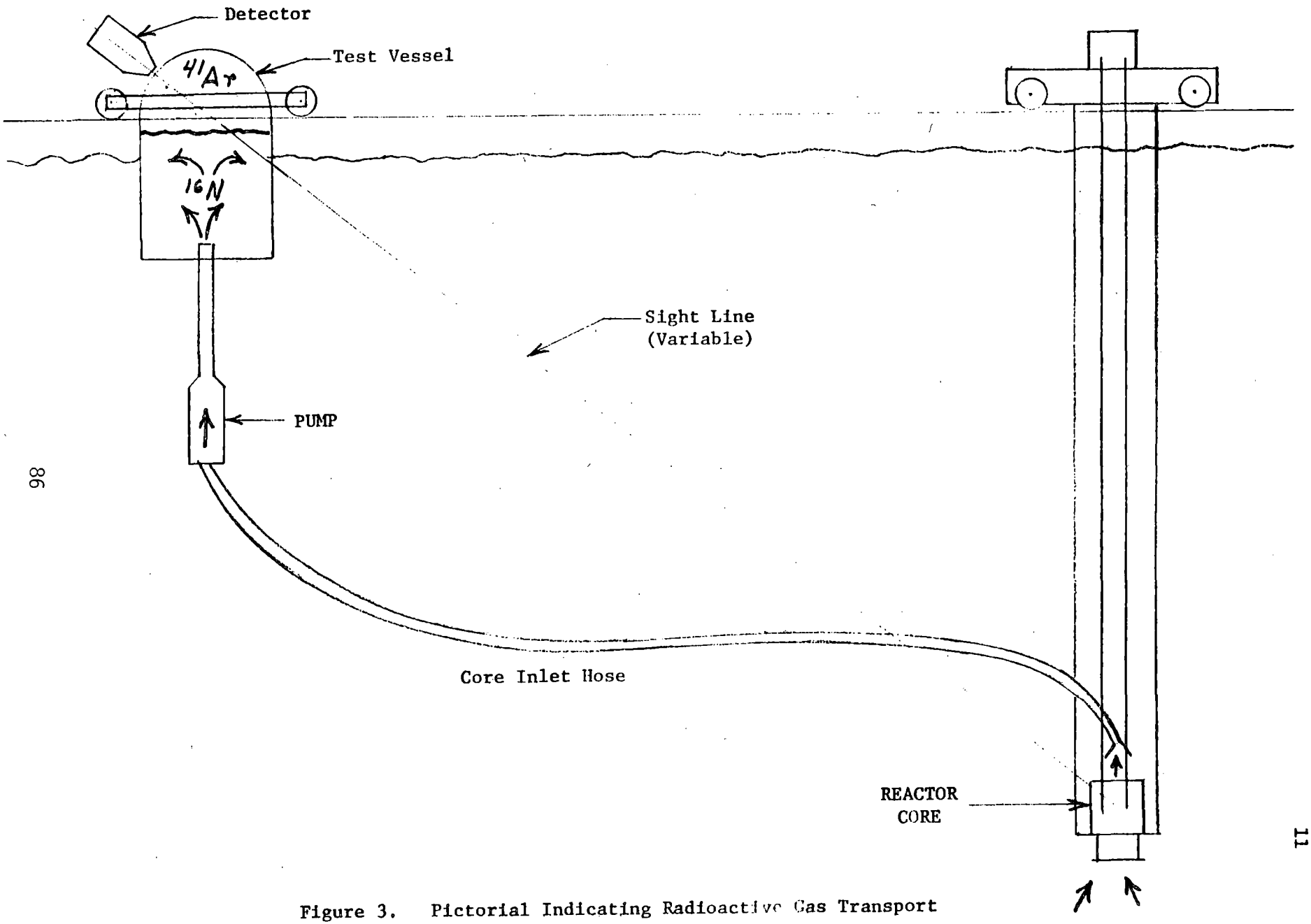

Figure 3. Pictorial Indicating Radioactive Gas Transport

buildup of ^{41}Ar in the bubble with time, as long as the reactor and pumping systems are operating, since ^{41}Ar has a 1.8 hour half-life. Thus by varying the reactor level and the rate at which the radioactive water is pumped into the simulated pressure vessel, varying amounts of radioactive material in the liquid and gas phases can be achieved.

Inserting cobalt-60 sources of various intensities in and around the test pressure vessel, by means of the instrument tubes, will simulate the presence of radioactive crud in an actual pressure vessel.

Although the radiation levels produced in this simulated pressure vessel will not approach the worst case conditions which can exist above a power reactor head, the radiation fields so produced should demonstrate the proof of principle of any instrument as well as provide data to design a system which can accurately and effectively function under reactor conditions.

V. Gamma Ray Gauges in Reactor Vessel Radiation Fields

For power reactors, one obviously cannot use the traditional concepts that have been developed in the past as fluid level gauges. A fixed detector looking at some internal source such as the core will not work because of the changing radiation intensity and composition under the various conditions previously described. Thus no meaningful calibration equation of radiation intensity versus fluid level could be developed. Computer comparison of the current data with past data recorded when the reactor was under similar conditions might allow the detection of gross changes in the fluid level.

Also, if one could move a radiation detector vertically through the core or just outside the pressure vessel walls, one should see a relatively sharp change in radiation intensity as the detector passes the gas-liquid

interface because of the dramatic change (three orders of magnitude reduction) in the mass attenuation coefficient of the gas as compared to the coolant water. In addition, one should see a significant change in the spectral composition of the photon radiation. But putting a detector inside the core would be an invasive technique and few existing reactors would have available vertical tubes for the insertion of such detectors. The presence of biological shielding and the various primary loop auxiliary equipment adjacent to the pressure vessel wall would also interfere with any vertical movement of a detector outside the pressure vessel, unless existing instrument tubes were available in this location.

The primary method being proposed in this work is the use of a highly shielded, well collimated detector (mounted on or near the vessel head) which will see only a relatively narrow beam of photon radiation coming from a single direction from within the reactor vessel. Low energy scattered photons would be screened out using high atomic number absorbers on the interior end of the detector collimator. If one is interested only in the change of radiation intensity, a simple ion chamber could be used, but if photon spectral changes are to be observed, a detector such as a water cooled alpha stabilized NaI(Tl) detector could be employed.

The detector system would be bolted to the side of the reactor head (see Figure 1), and could be rotated in a vertical direction about an axis through the centroid of the detector. This detector system is similar to the directional scanners used in nuclear medicine. Existing manufacturers of this type of equipment should be able to construct reliable instruments for this type of level gauging system.

When the detector is only looking diagonally through a water phase, the radiation being detected would come from the crud on the bottom side of the reactor head, the radioactive material in the water, the crud on the far side walls, and the crud on any control rod drive equipment that may be along the viewing line of sight. The water will partially attenuate the photons originating below the surface of the water. When the line of sight of the detector is through an air bubble, the detector will see the spectral composition produced by the gaseous fission products. In addition, there will be considerably less attenuation of the radiation from the crud deposits.

As the line of sight passes through the gas-liquid interface, there should be visible a dramatic change in radiation intensity and composition. This interface change would be further enhanced by the presence of suspended radioactive materials floating or entrained at the interface by the system turbulence.

Thus one could use a small micro computer to continually monitor the intensity and/or spectral composition profile as a function of detector vertical angle and compare this profile with computer averaged profiles recorded in previous scans made under similar operating conditions. Such an averaging process would normalize out the presence of localized hot spots which could give false low level readings. The resulting normalized profile curve should clearly and rapidly show the operating personnel a discontinuity at the gas-liquid interface.

In addition, this device would quickly pinpoint the presence of non-typical fission products in the water and follow changes in their composition. It would be the authors' intent to set up such a system on the test fixture and determine the sensitivity of such a device to small bubbles and progressively larger level changes.

FURTHER TEXT, OUTLINING THE BUDGET, IS OMITTED IN THIS DISTRIBUTION COPY.

NRC

CT/IC3491

November 17, 1980

A. (PAUL) RAPTIS' PRESENTATION

Dr. Ned Kondic
U.S. Nuclear Regulatory Commission
Safety Research
Willste Building
Washington, D.C. 20555

Dear Ned:

The meeting on level measurements for LWR's that you chaired in Washington was very informative. The nuclear techniques presented looked good, but I am not an expert in the field and therefore I cannot make an accurate judgement of their value and feasibility. The microwave technique presented by Davco sounds impressive and the presenter knew his subject very well. I am, however, very skeptical about its application to LWR's for level measurement for two reasons. First, I think coupling will be difficult if not impossible to accomplish and second, microwave propagation in media such that inside the reactor are not as straight forward as in waveguides or air. I feel that due to the variations in the speed of light in such media the distinction of the reflected pulses will be difficult to accomplish.

As far as acoustics I leave it to the other participants to express their thoughts. My feedback from the people there was good and gave encouragement to continue the work. Please let me know if there is any chance to fund some work on level measurements via acoustic techniques. If yes, I would like to submit a proposal.

Enclosed are copies of the three viewgraphs that I presented at the meeting. You will also be receiving a letter from Dr. W. W. Durgin inviting you to participate as a panelist, on the session of two-component flow measurement in the 2nd Symposium on Flow in St. Louis on March 25, 1981.

Regards,

Paul

A. C. Raptis
Components Technology Division

ACR:nh

Enclosure

cc: R. S. Zeno
G. S. Rosenberg
P. R. Huebotter
T. P. Mulcahey

R E A C T O R V E S S E L (NOT TO SCALE)

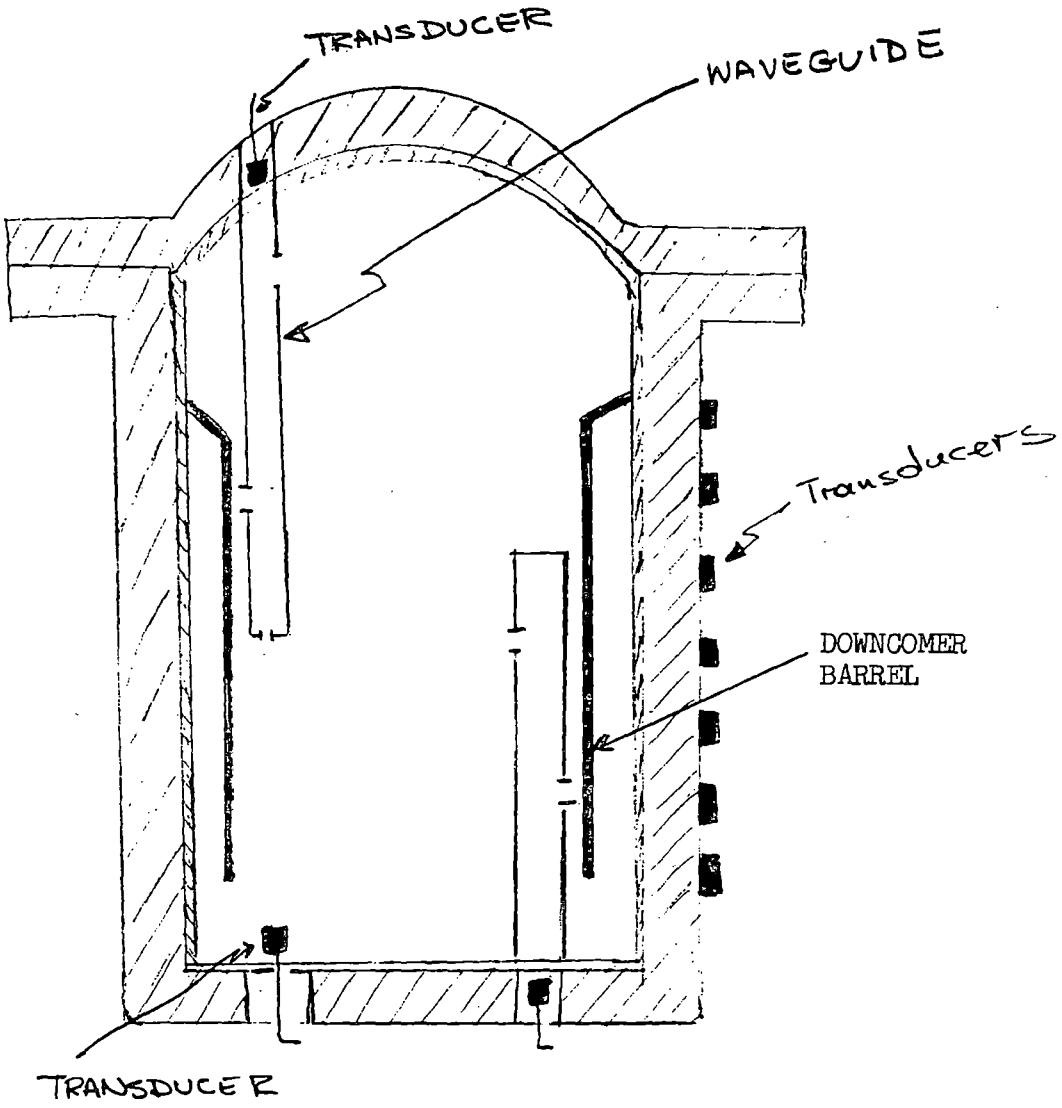

ARRANGEMENTS SKETCH FOR
POSSIBLE ACOUSTIC/ULTRASONIC LEVEL
MEASUREMENTS

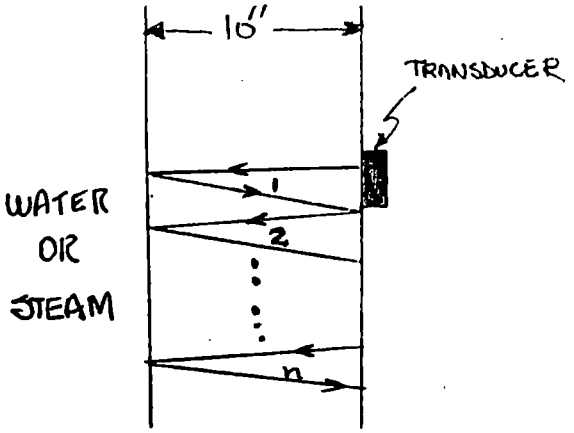

$Z_s = 46.3 \times 10^6$

$Z_N = 1.5 \times 10^6$

$Z_{steam} = 0.0268 \times 10^6$

$P_R \Rightarrow$ reflection coef.

$P_T \Rightarrow$ Trauswission coef

$$\frac{P_R}{P_T} = \frac{\frac{Z_s}{Z_i} - 1}{Z_i + 1}$$

$Z_i \Rightarrow$ water or steam

1st echo: with water

$R_R = 0.937 P_t$

with steam

$P_R = 0.998 P_t$

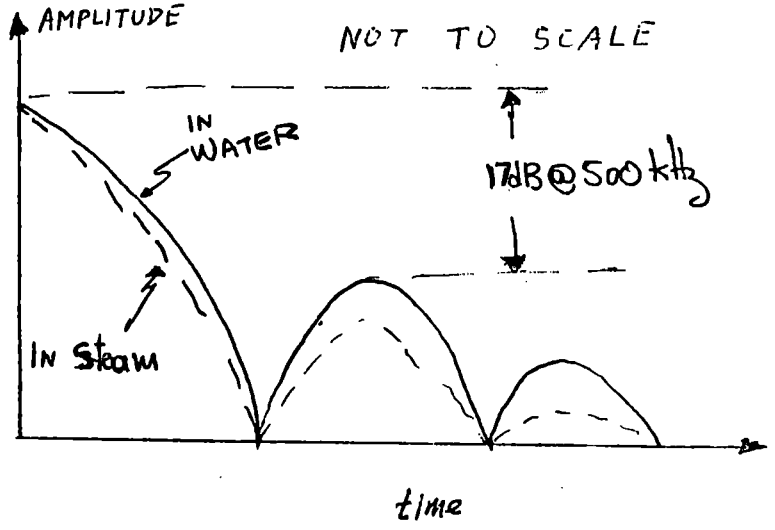

nth echo

$P_R = (0.937)^n P_t \Rightarrow$ water

$P_R = (0.998)^n P_t \Rightarrow$ steam

let n=10, then

$P_R = 0.521 P_t \Leftarrow$ water

$P_R = 0.980 P_t \Leftarrow$ steam

SOUND/ULTRASOUND ATTENUATION CHARACTERISTICS

ATTENUATION COEFFICIENT, α (dB/cm)

in water (multiply all values by 10^{-5})

Frequency (kHz)	0°C	80°C
100	3.45	0.86
200	13.80	1.84
300	31.00	4.11
400	55.20	7.36

in steel at 23 C, 73F (multiply all values by 10^{-2})

100	0.872
200	1.75
300	2.61
400	3.49

α in steel is almost independent of temperature within an interval of $\pm$ 20 C.

At 5MHz, where scattering predominates, α is more temperature sensitive.

ULTRASONIC RANGING SYSTEM

-DR. S. BANERJEE, UNIV. OF CALIF. -

To shorten the transmit pulse:

An intermediate board is needed between the Ultrasonic PRONTO! Board and the EDB board. Construct the board as shown using the suggested components or equivalents.

Try something like this :

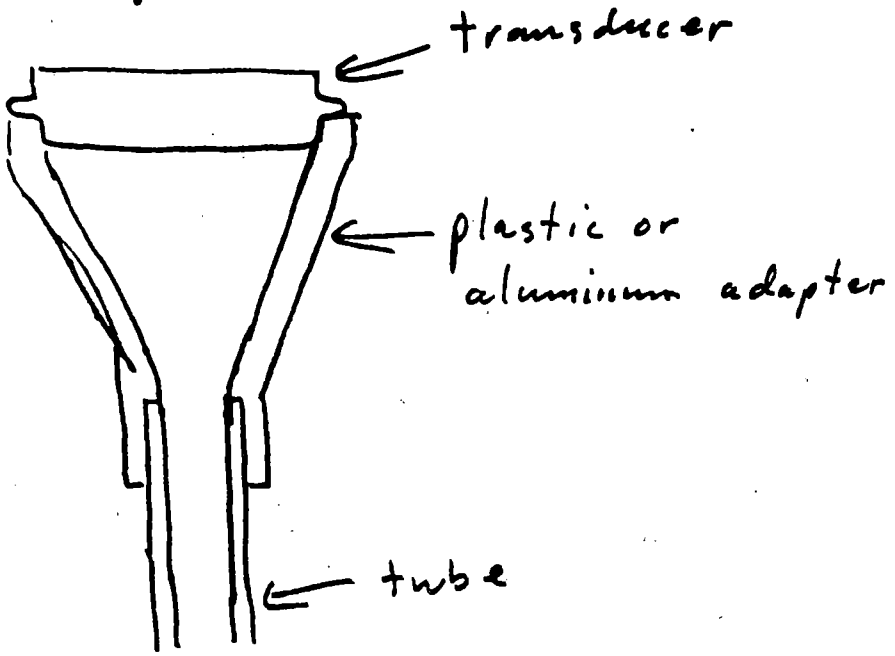

You can build the circuit called "Fixed Gain Tester Circuit" in notes and use an oscilloscope to read time difference between transmit and out. Gain of amplifier might have to be reduced. This can be done by changing the 240 K resistor to a lower value maybe as low as 5 K or 10 K.

S_a	S_b	S_c	S_d	Transm Cycles	Minimum Range (approx)
C	C	C	C	3	4.5"
O	C	C	C	5	4.75"
O	O	C	C	9	5.3"
O	O	O	C	25	7.5"
O	O	O	O	invalid	

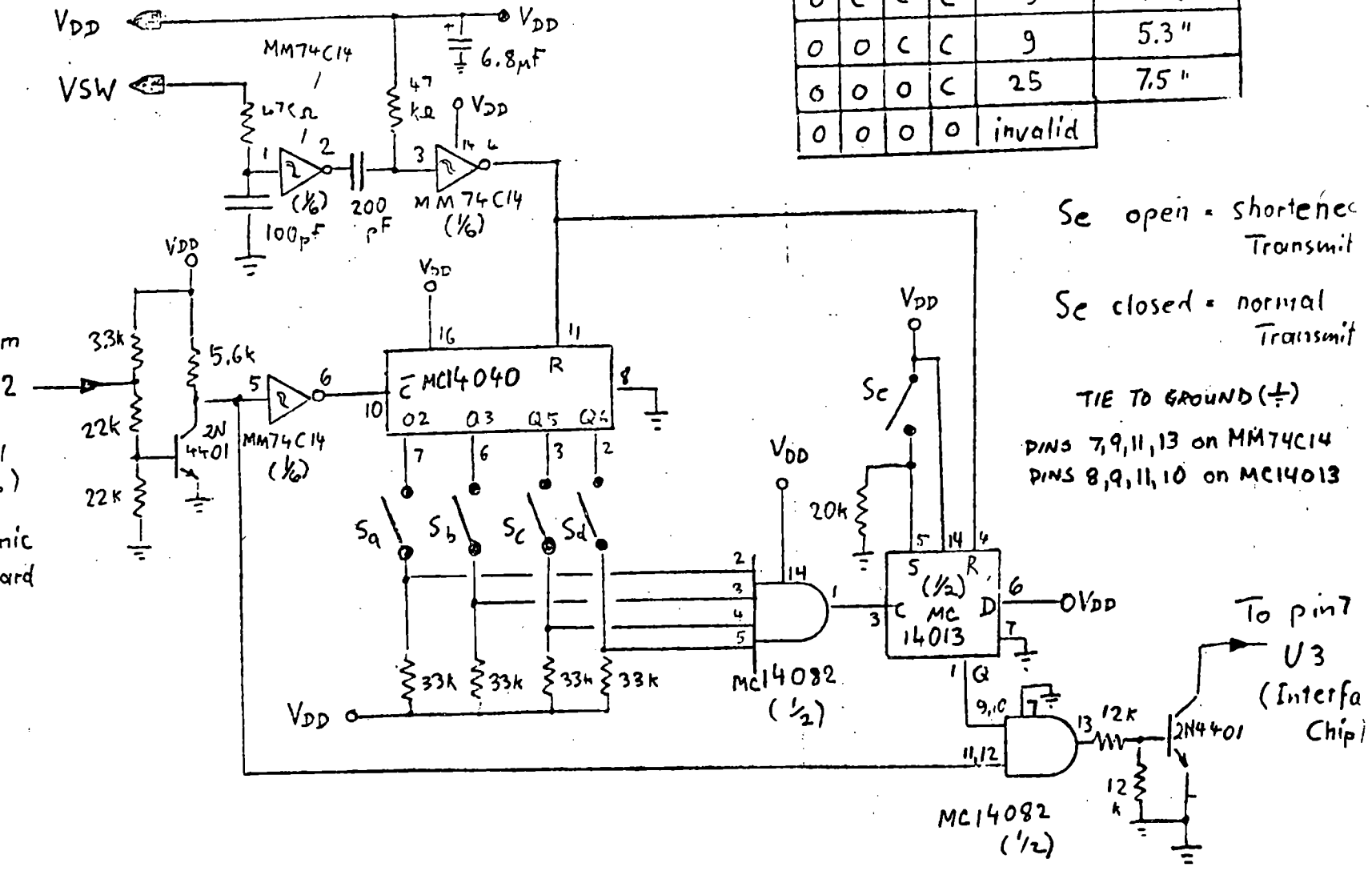

Note: Conductor between Pin 12 of U2 and Pin 7 of U3 on Ultrasonic Circuit Board has to be cut

Supplemental Circuit for Shortening Transmit

8/27/80
Ssi

ULTRASONIC RANGING SYSTEM

Modifying for finer resolution than one-tenth of a foot.

The EDB board has gates that are unused. No additional IC packages are necessary. The conversion requires that conductors be cut and that wires be added. Refer to Figures 21 and 23 of the instruction manual.

Pin 12 is the "CL" input of IC6. IC6 is a binary-coded decimal counter that counts the "CL" input. In Figure 21 A_7 is used in the "CL" input. In Figure 21-M2 the "CL" input is changed to A_4 (Note that pin 5 of IC8 is disconnected from pin 10 of IC8 and is reconnected to pins 3 and 4 of IC8 and pin 6 of IC6. Follow the procedure below to convert to the 9.25 TIMES FINER resolution. The new display will indicate cycles of A_4 up to 999 cycles. (If one uses it for measurement, note that A_1 is only approximately 1/8".)

Make the 7 cuts and lift the one jumper and the one resistor (R_2) as indicated in Figure 23-M2. Have available a 300k ohm $\pm$ 5% resistor and a ceramic .001 ufd capacitor. See also Figure 21-M2.

Rewire as follows:

1. Connect pin 5 of IC8 to pins 3 and 4 of IC8. (Pin 6 of IC6 is also connected with pins 3 and 4 of IC8.)
2. Connect pin 12 of IC6 to pin 5 of IC9.
3. Connect one end of the .001 ufd capacitor to pin 3 of IC6 and the other end to pin 4 of IC6.
4. Connect pin 3 of IC3 to pin 2 of IC2. Connect pin 8 of IC8 to pin 2 of IC2.
5. Connect pin 4 of IC3 to one side of the 300k ohm resistor. Connect the other side of the resistor to pins 1 and 2 of IC8 (Note: pins 1 and 2 of IC8 are already connected together.)
6. Connect pin 9 of IC8 to pin 4 of IC5 (Same as E-9).
7. Connect pin 16 of IC9 to pin 14 of IC8.
8. Connect pin 8 of IC6 to pin 11 of IC6.

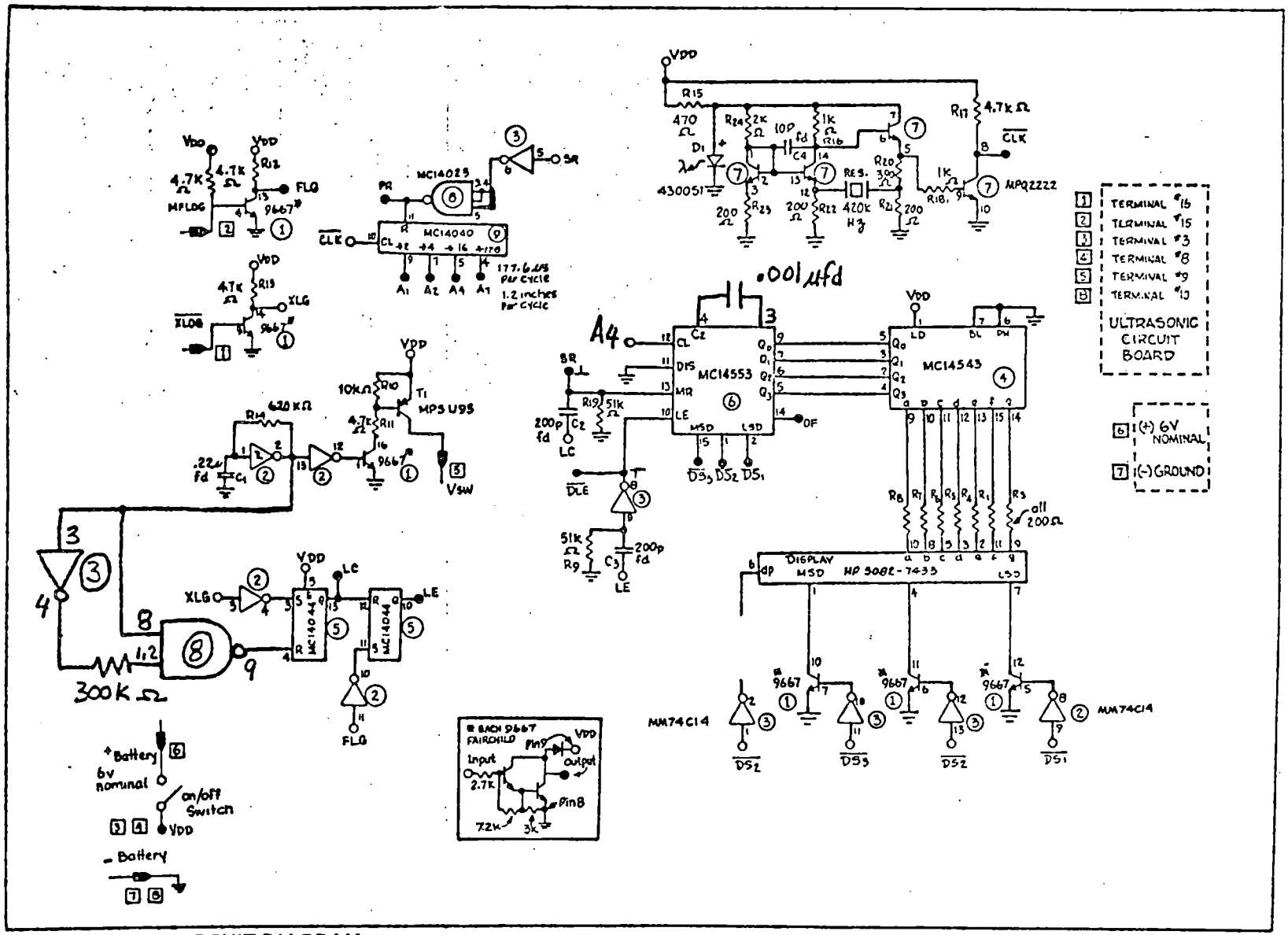

FIGURE 21. EDB CIRCUIT DIAGRAM

Figure 21-M2

LIGHT EMITTING DIODE DISPLAY

10.9FTMAX

(9.25 TIMES FINER) 8/27/80 S.J. Jam

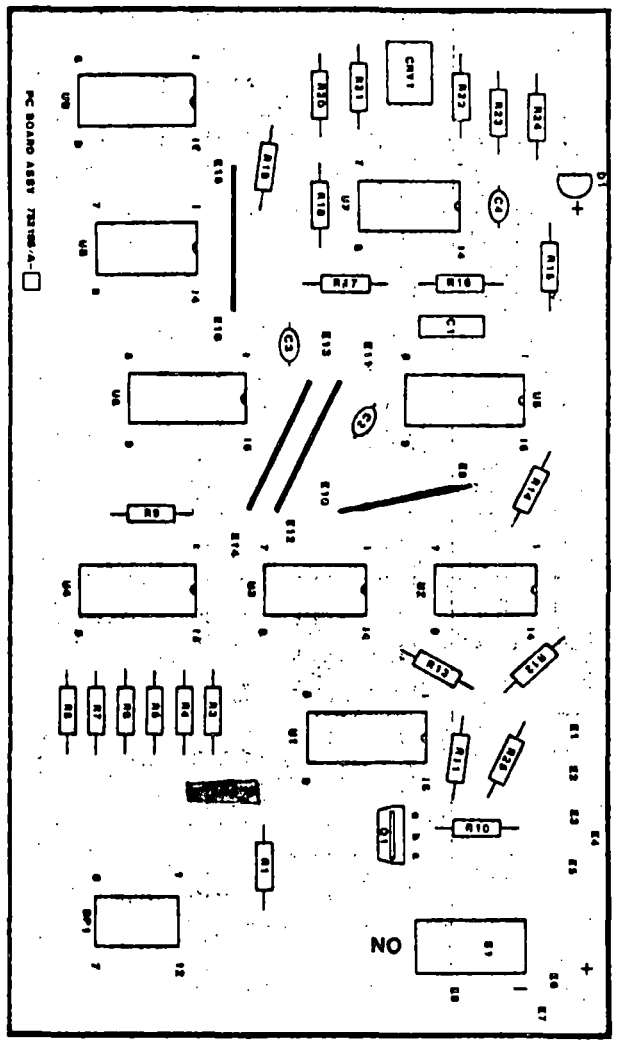

TOP

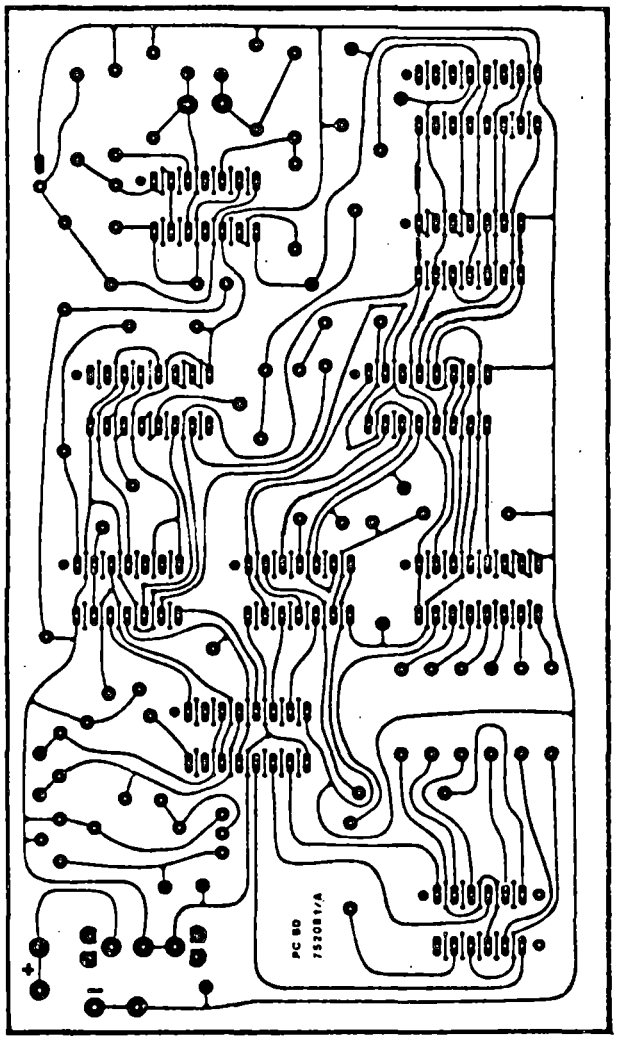

BOTTOM

FIGURE 23. EDB COMPONENT LAYOUT AND PRINTED CIRCUIT BOARD.

Figure 23-M2

LIGHT EMITTING DIODE DISPLAY (9.25 TIMES FINER) 8/27/80 S.Y. Tam

10.9 FT MAX

POLAROID ELECTROSTATIC TRANSDUCER

Technical Specifications

This instrument grade electrostatic transducer is specifically intended for operation in air at ultrasonic frequencies. The assembly comes complete with a perforated protective cover and slip-on connectors.

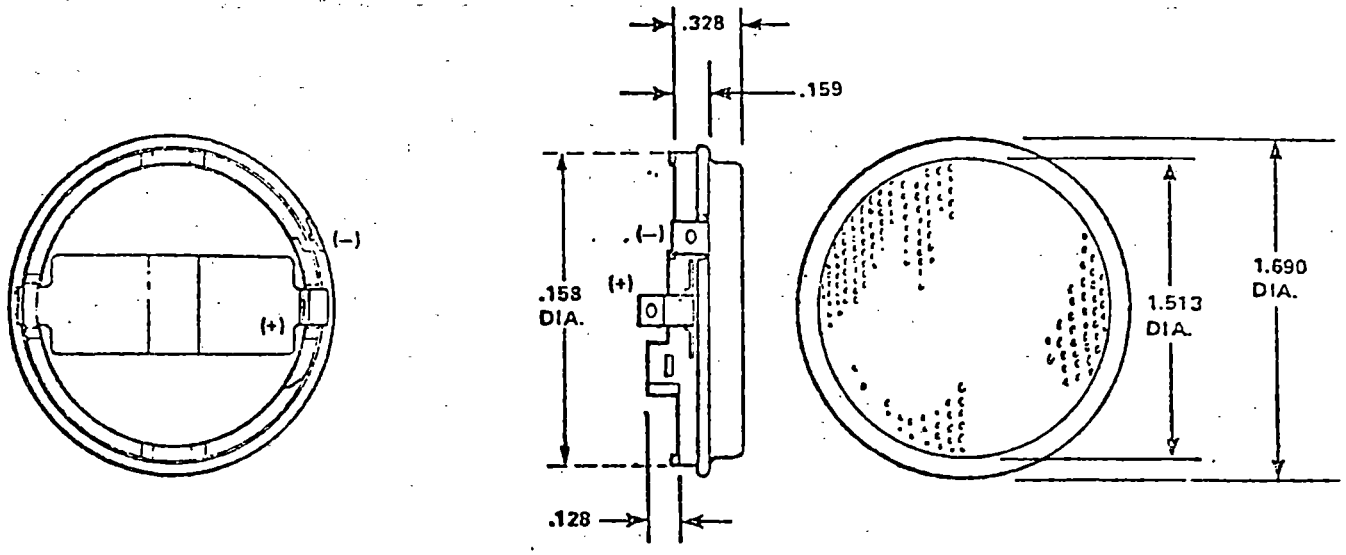

Specifications:

Usable Transmitting Frequency Range	See Graph
Usable Receiving Frequency Range	See Graph
Beam Pattern	See Graph
Minimum Transmitting Sensitivity at 50 kHz 300 vac pk-pk, 150 vdc bias (db re 20 uPa at 1 meter)	110 dB
Minimum Receiving Sensitivity at 50 kHz 150 vdc bias (dB re 1v/Pa)	– 42 dB
Suggested DC Bias Voltage	150 V
Suggested AC Driving Voltage (peak)	150 V
Maximum Combined Voltage	400 V
Capacitance at 1 kHz (Typical) 150 vdc bias	400 - 500 pf
Operating Conditions	
Temperature	32° - 140° F
Relative Humidity	5% - 95%
Standard Finish	
Foil	Gold
Housing	Flat Black

Specifications subject to change without notice.

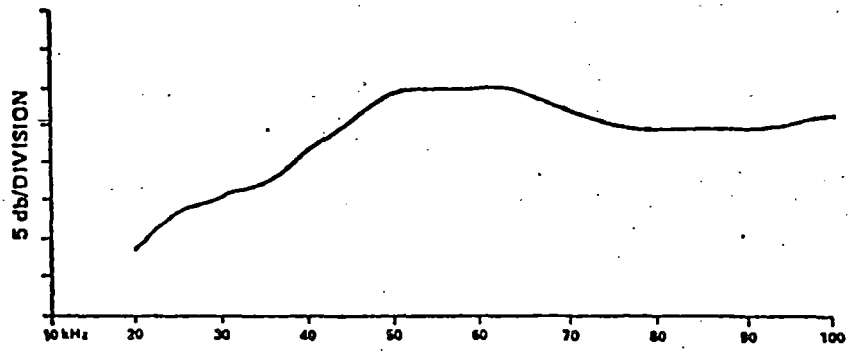

TYPICAL TRANSMIT RESPONSE

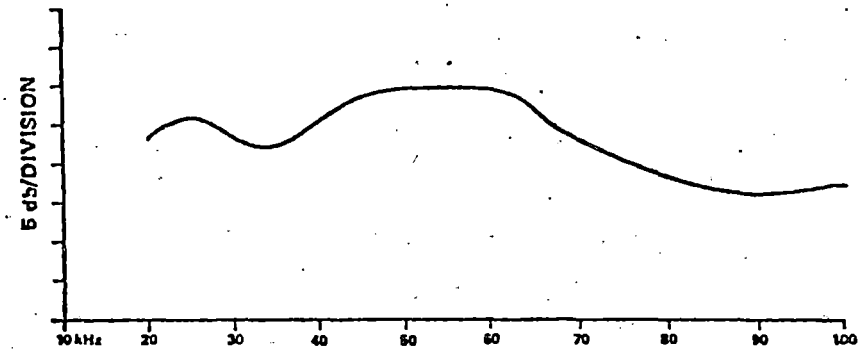

TYPICAL FREE FIELD RECEIVE RESPONSE

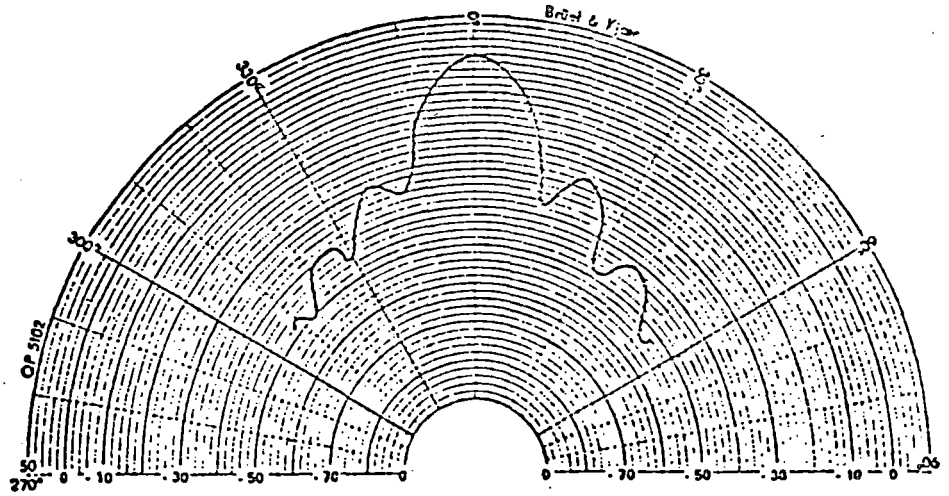

TYPICAL BEAM PATTERN AT 50 kHz NOTE: db normalized to on-axis response.

NOTE: Curves are representative only. Individual responses may differ.

For additional information, technical assistance or prices and delivery, write:

Polaroid Corporation
Ultrasonic Ranging Marketing
Cambridge, Massachusetts 02139

Or call toll free from the continental U.S.:

800-225-1618

In Massachusetts call collect: 617-547-5177

Figure 17 is a fixed gain test circuit. It is a simple circuit that may be built from readily available parts. The circuit produces a single frequency transmit burst of 8, 16, 32 or 64 cycles and repeats at regular intervals of about 200 ms. It features adjustable blanking, a fixed gain amplifier, a detector and complementary, buffered, echo-detect outputs. The transmit frequency is adjustable by means of a potentiometer.

This circuit is intended as a starting point in arriving at a system design where the sophistication of the ultrasonic circuit board is not needed.

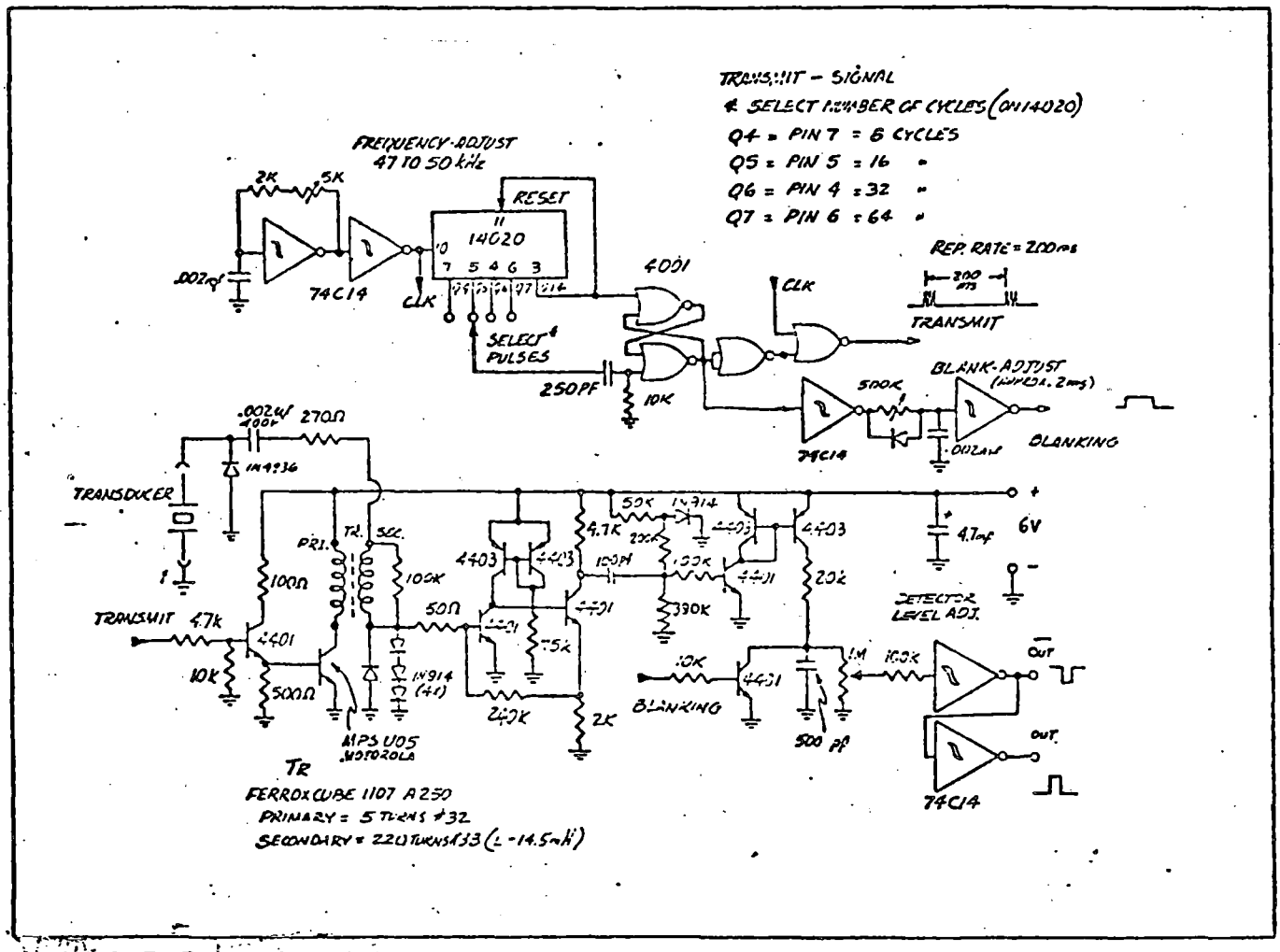

FIGURE 17. FIXED-GAIN TESTER CIRCUIT

Inexpensive Transformer

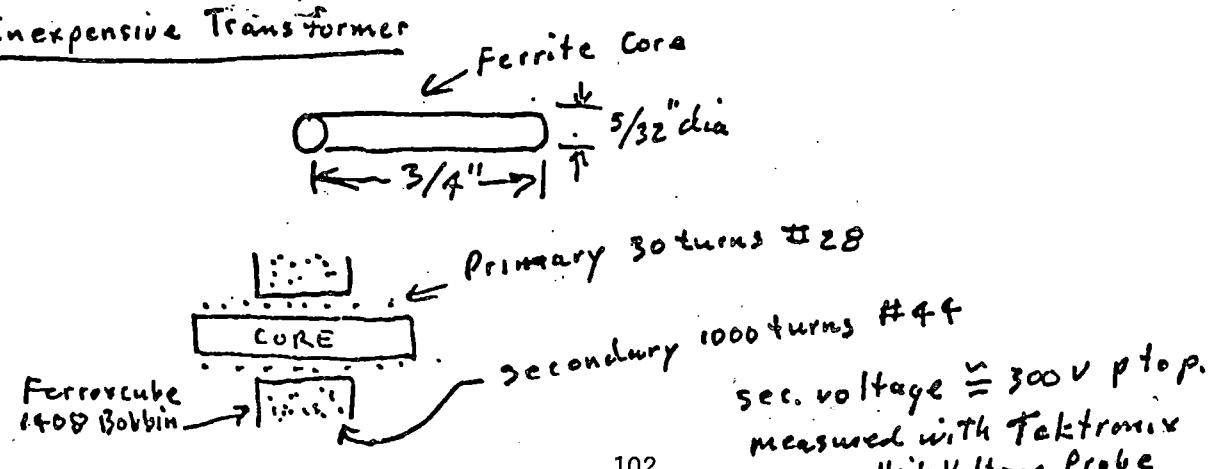

Wave forms : Prado Sonar Module

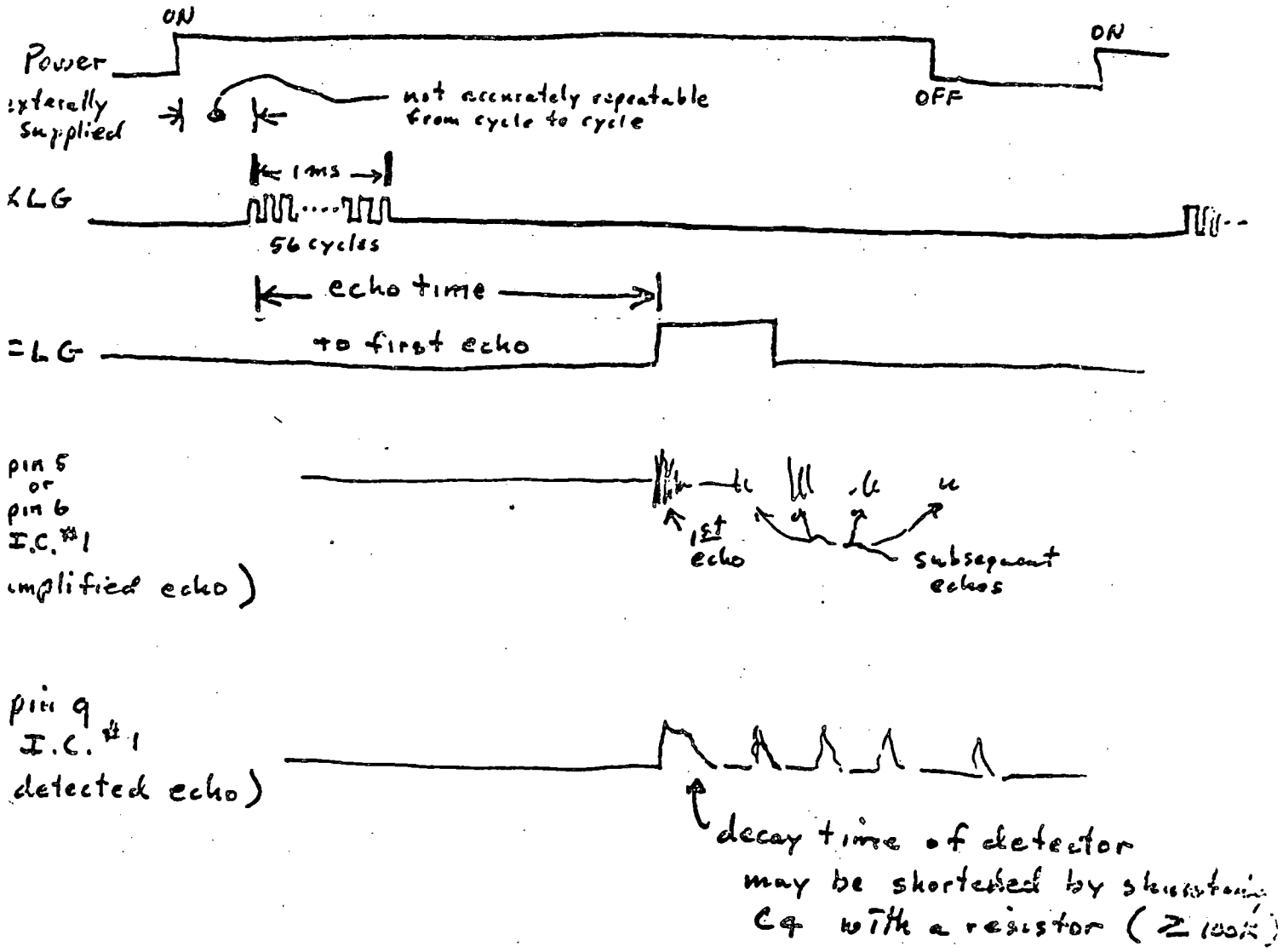

These waveforms refer to a module that is modified as shown on drawing "2806 Interface Connections". The top waveform is labled "+ switched" on the circuit diagram "2806 Interface Connections". This circuit requires a 6 volt power supply of at least 1.5 A. or a supply of 250ma continuous shunted by a large capacitor so that 1.5 Amps can be sustained for 1 ms. with less than .5 volts drop. The MDL signal turns on power when high and turns off power when low. MDL should be high for about 100 ms. and low a minimum of 100 ms. unless the speed up circuit consisting of the 33K and 1K resistors, two diodes and NPN transistor ~~was~~ is used. These components are

shown on the drawin
short as 40 ms. I
these components.

the off time to be as
g is not needed omit

Gain Controlling Logic

Three logic s
the module gain and

ed GCA, GCB, and GCC control
as a function of time.

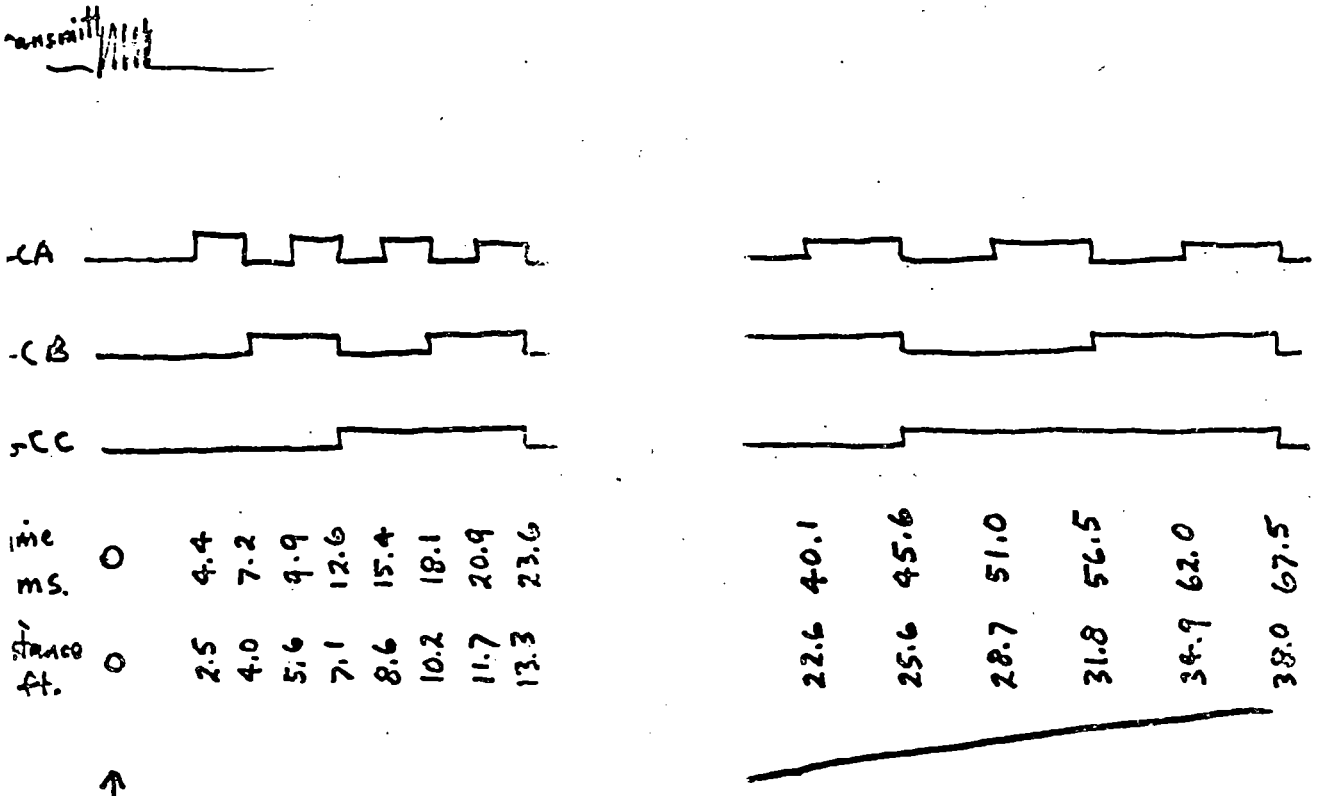

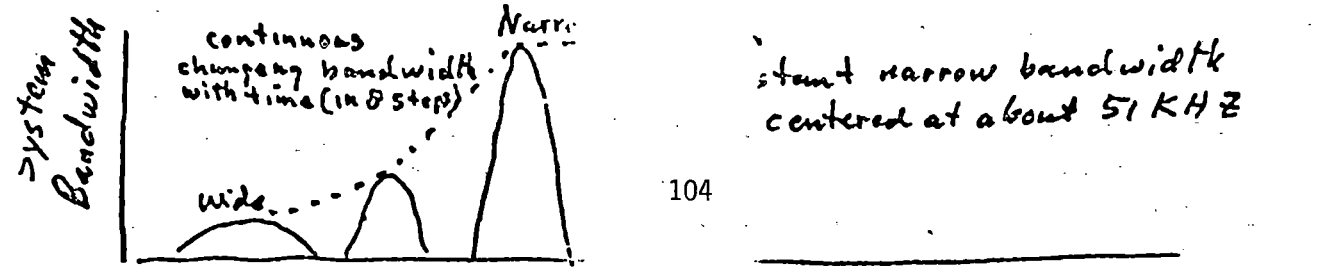

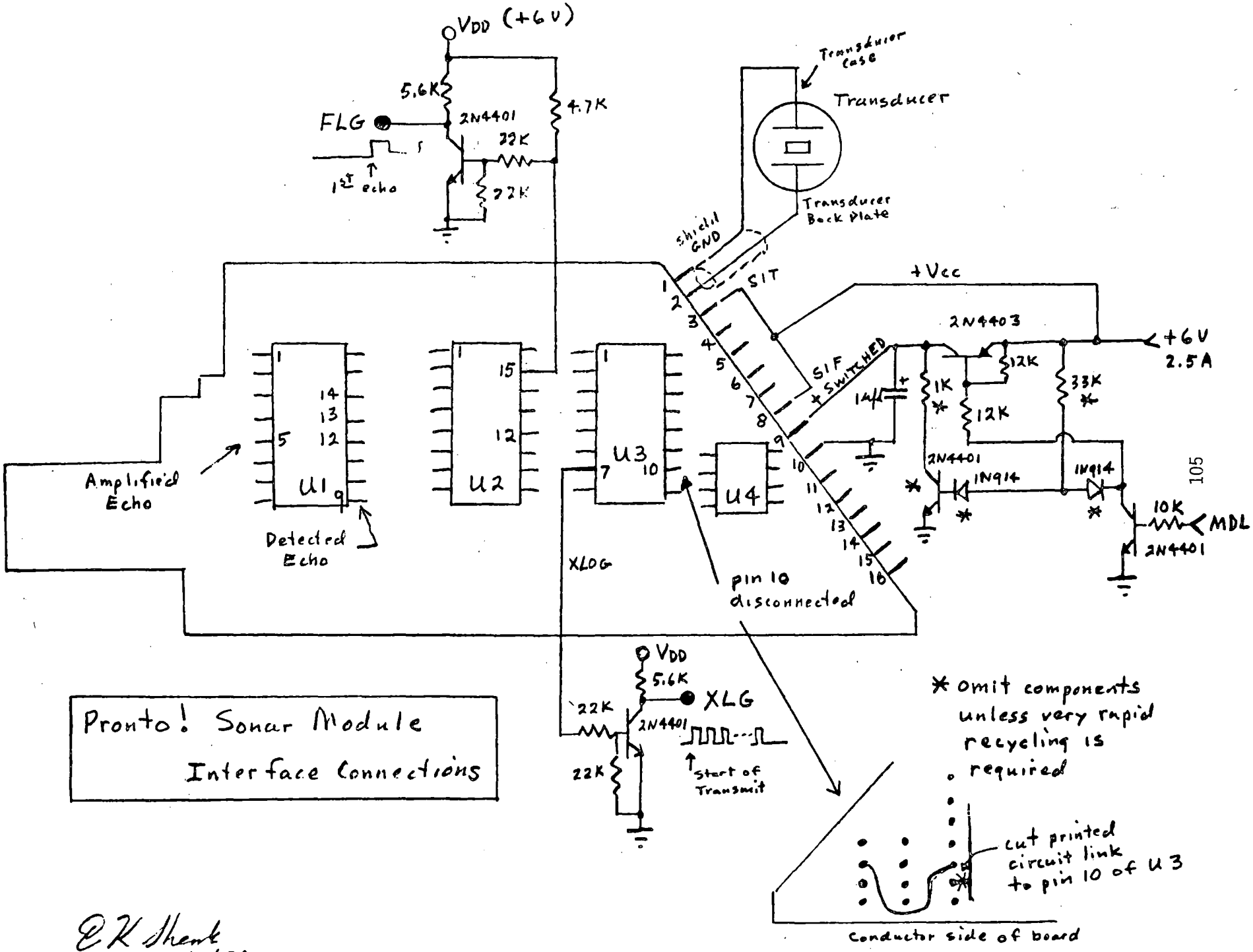

Pronto! Sonar Module

Interface Connections

EK Shenk
4/11/80

Interface Circuits

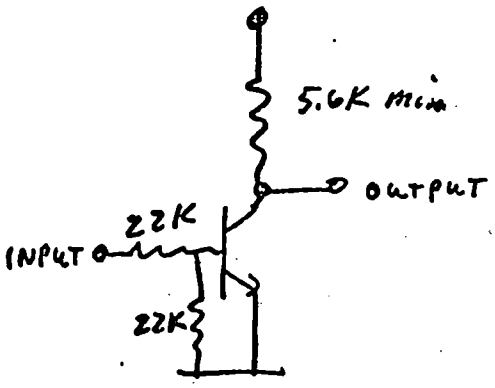

can be used for

- XLOG
- GCA
- GCB
- GCC
- MFLOG
- etc.

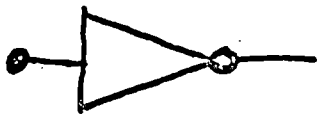

can be used for

Rec V

CMOS

at least 1Meg input impedance

Gain Control

Change R_1 on module to change gain

Small gain changes can be made by potentiometer on module

Detector Time Constant Modification

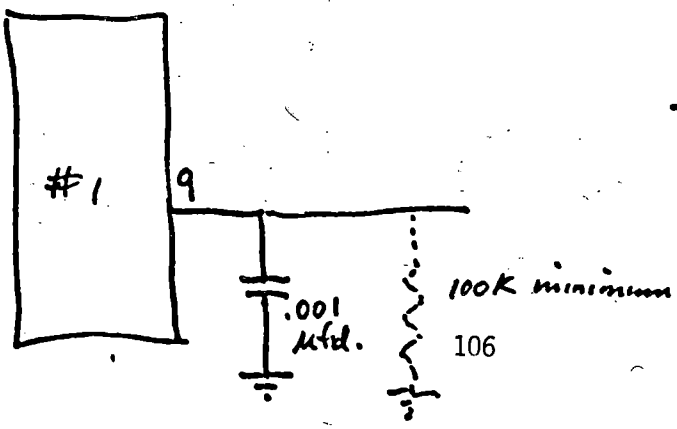

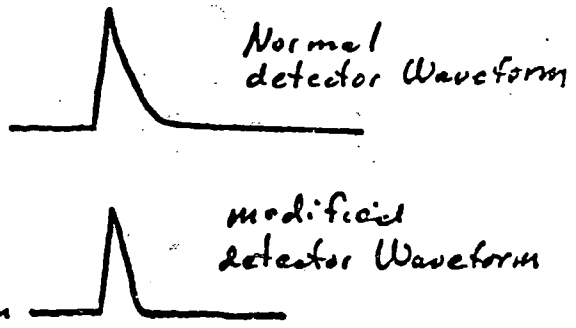

Drive Circuit Suggestions:

CMOS works nicely as a drive circuit. Three circuits are shown. The first is a symmetrical drive suitable for one to five repetitions per second. The second is asymmetrical and may be used as rapidly as 10 rps with long "on" symmetry and as long as four repetitions per minute with long "off" symmetry. The third circuit is a digital system for very slow rep-rates and may also be used to drive up to eight modules sequentially.

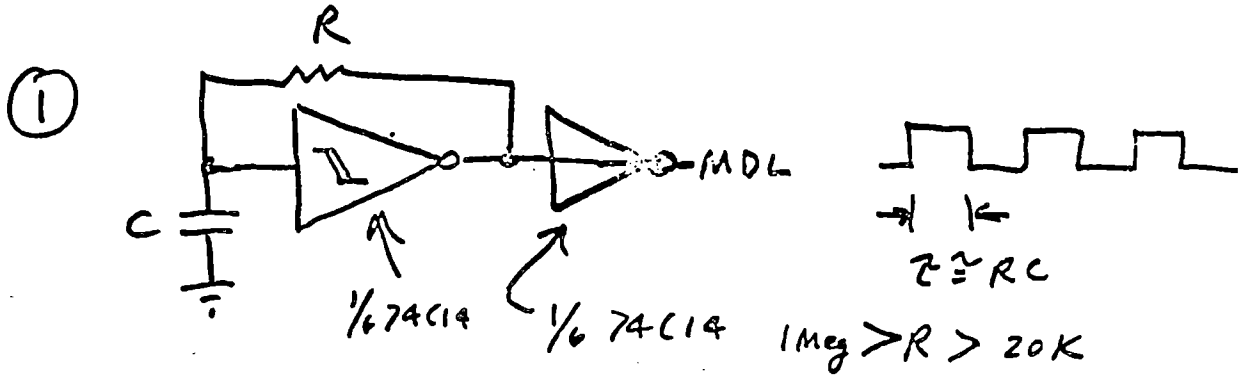

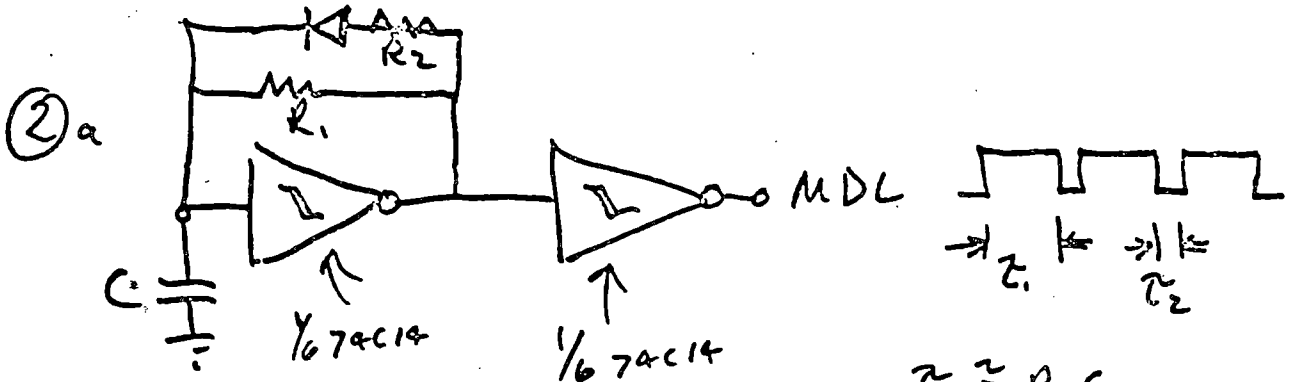

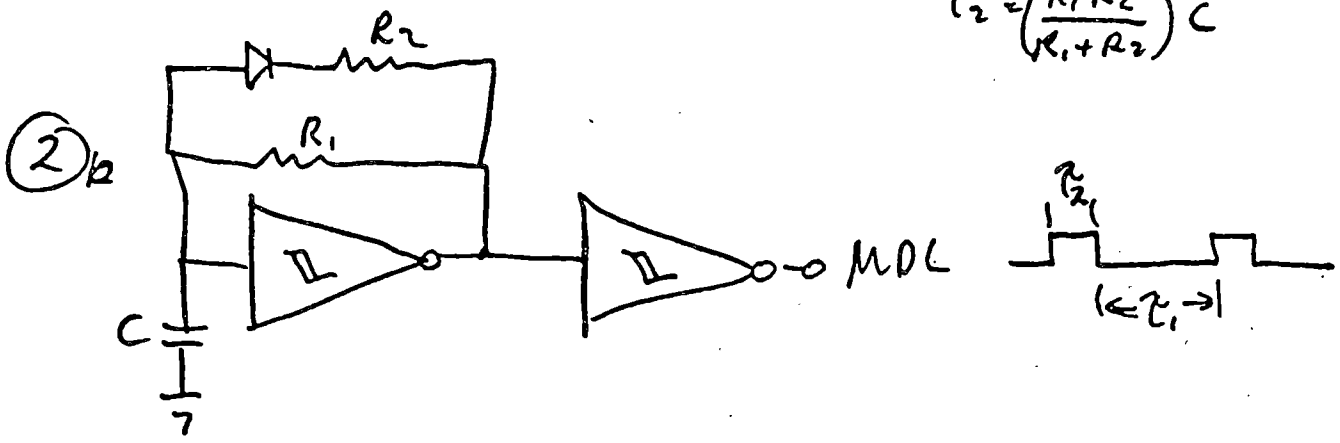

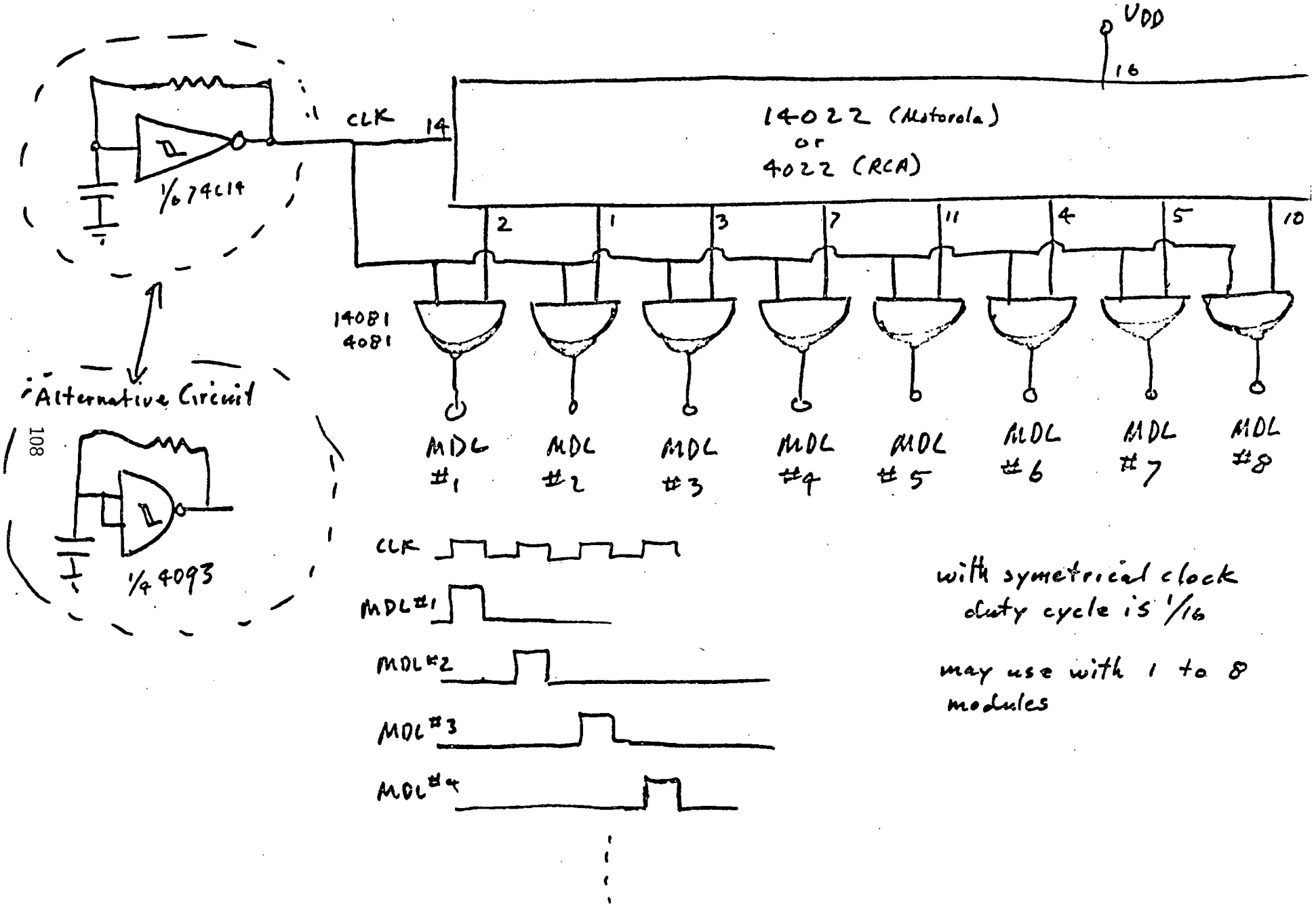
VDD
16
CLK
14
14022 (Motorola)
or
4022 (RCA)
2
1
3
7
11
4
5
10
14081
4081
MDL #1
MDL #2
MDL #3
MDL #4
MDL #5
MDL #6
MDL #7
MDL #8
1/6 74C14
Alternative Circuit
10Ω
1/4 4093
CLK
MDL#1
MDL#2
MDL#3
MDL#4
with symetrical clock
duty cycle is 1/16
may use with 1 to 8
modules

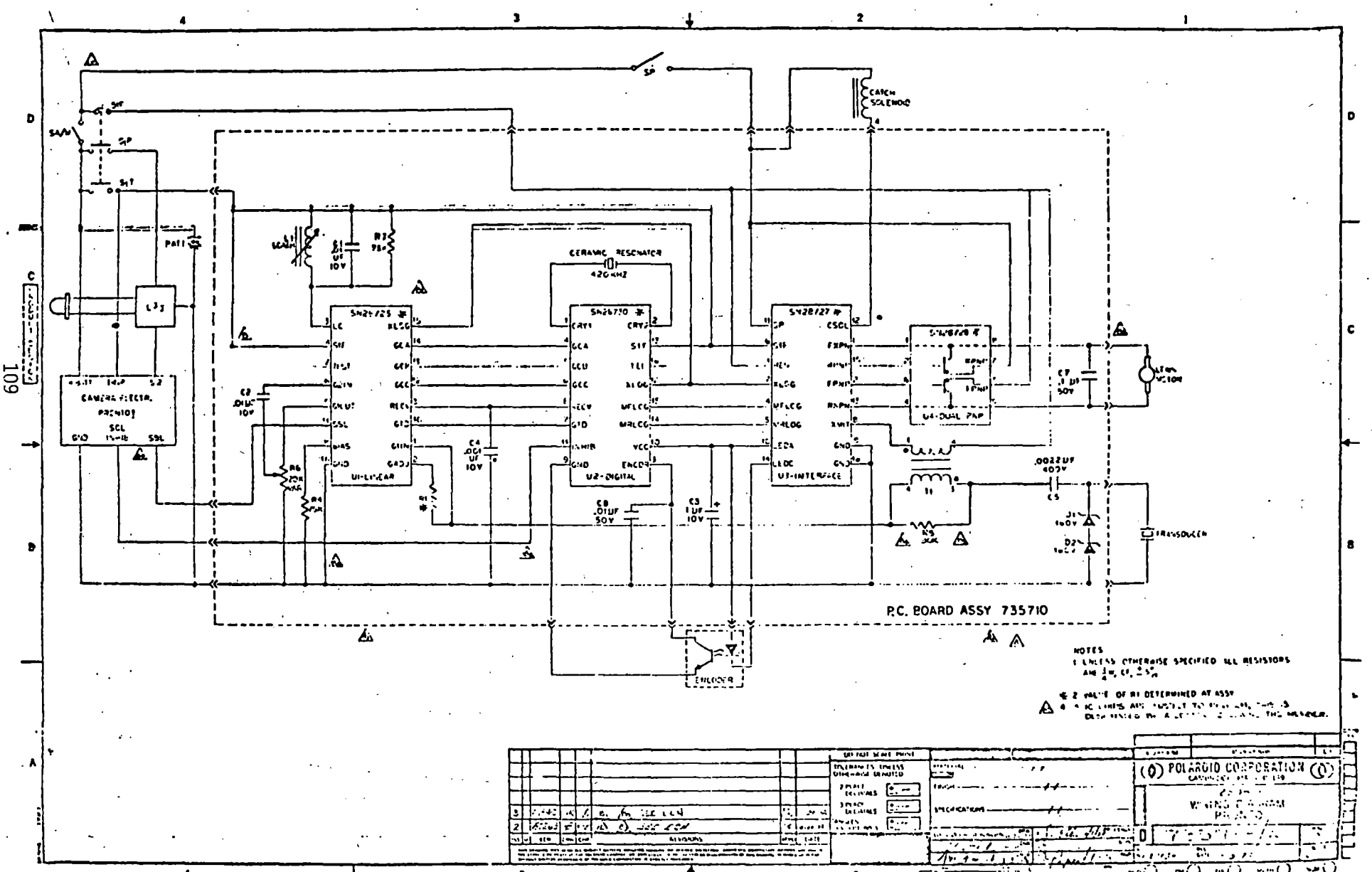
CAMERA ELECTR. PRONTO
CERAMIC RESONATOR
420 KHZ
U1-LINEAR
U2-DIGITAL
U3-INTERFACE
U4-DUAL PNP
CATCH SOLENOID
TRANSDUCER
ENCODER
P.C. BOARD ASSY 735710
NOTES
1 UNLESS OTHERWISE SPECIFIED ALL RESISTORS
2 VALUE OF R1 DETERMINED AT ASSY
POLAROID CORPORATION

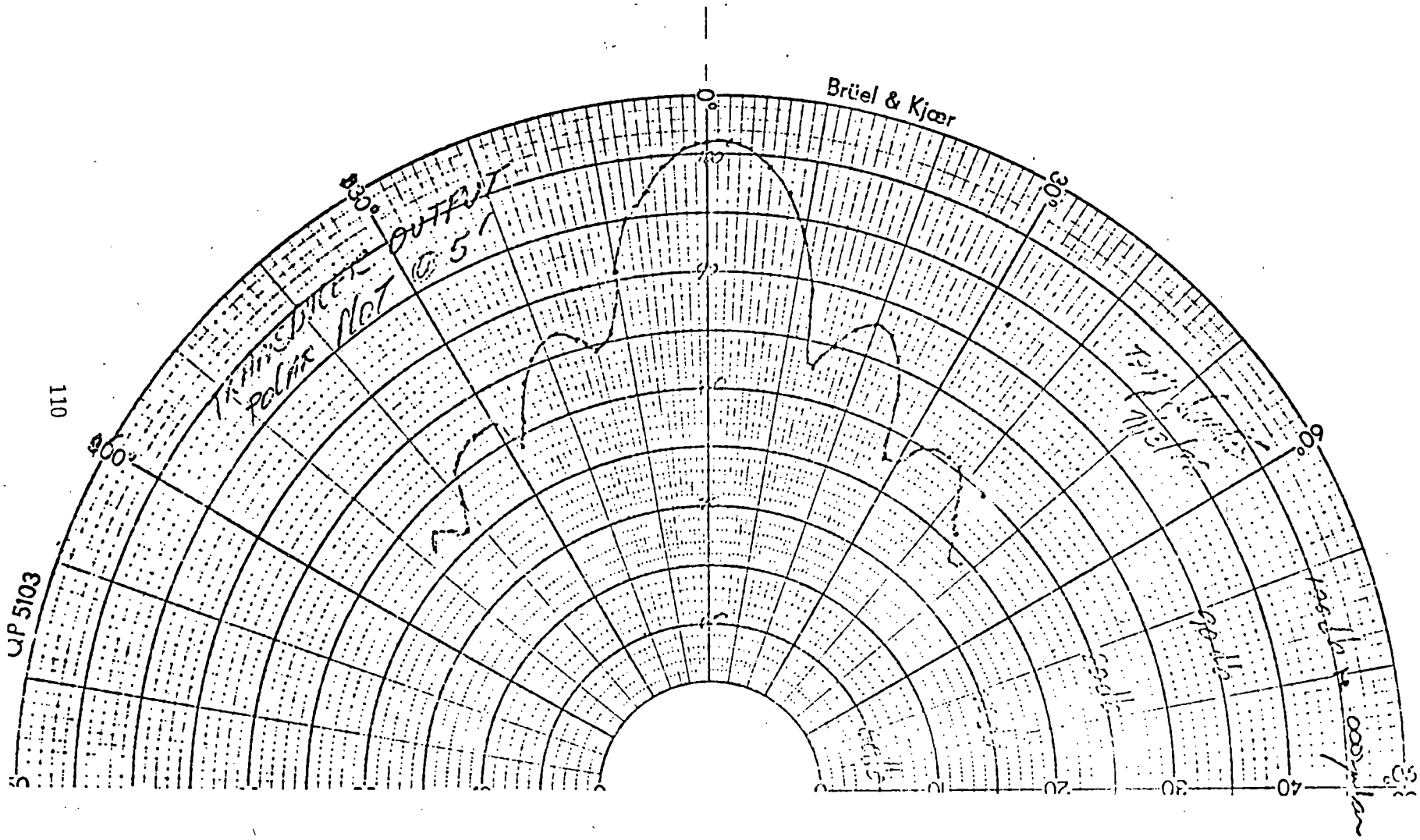
Brüel & Kjær
QP 5103
0°
30°
60°
90°
120°
150°
180°
0
10
20
30
40
50
TRANSDUCER OUTPUT
POLAR PLOT @ 5'

An extensive evaluation of variation in absorption of ultrasound by air as it pertains to sonar echo amplitude and gain is discussed in this report. Analytical expressions which allow direct calculation of the absorption coefficient for any temperature/R.H. combination are used to present the effect of variation in tabular and graphical form for near and far gain curves as well as the effect on transducer receive volt level. It will be shown that earlier observations of system gain and transducer receive volt variation with T and R.H. can be accounted for by absorption variation with much better agreement than earlier believed. The impact of such predictability is apparent when one considers the great difficulty and expense involved with tightly controlling T and R.H. The effect is also discussed in terms of gain measurement in the field (CPS) as well as gain as it exists in the field for extreme user conditions and how manufacturing limits should be set to provide sufficient quality. Although it is true that the existing specification for gain is fairly well established, a new, improved gain measurement method as well as revision of kitting zones is currently being developed (cooperative effort with J. Reynard, et. al.) The information presented here will have impact in that area as well.

ANALYTICAL EXPRESSIONS FOR TOTAL ATTENUATION COEFFICIENT

In a 1976 National Physical Laboratory Acoustics Report (Ac74) E.N. Bazley derives expressions which may be used to calculate the total attenuation coefficient at any frequency, temperature, pressure and relative humidity. He includes direct comparison of calculated coefficients with numerous experimental observations made throughout the time period 1930 to the present by a number of active experts in the field.

Given as inputs the sound frequency, f Hz,
temperature, t °C,
pressure, P atm,
and relative humidity, RH%

one can find the intensity attenuation coefficient using the following steps. Calculate the percentage of water molecules, h:

$$h = \left(\frac{RH}{P}\right) T^{-4.922} \text{ antilog } (20.5318 - 2939/T) \tag{1}$$

where $T = t + 273.15$

Next, Calculate molecular attenuation due to oxygen, m_o :

$$m_o = 2 \left(\frac{\mu_{max}}{c_o}\right) \left(\frac{f}{\frac{f}{F_o} + \frac{F_o}{f}}\right) \tag{2}$$

where $F_o = 30560\ P\ h^{1.3}$ (3)

and $\frac{\mu_{max}}{c_o} = 4.2425 \times 10^{-6} + 8.8168 \times 10^{-8}\ t + 5.4834 \times 10^{-10}\ t^2$ (4)

nitrogen also attenuates sound significantly due to tranverse molecular vibration. Attenuation due to nitrogen, m_N, is calculated by:

$$m_N = \frac{1.71 \times 10^{-8}}{(1 + 0.00366\ t)^{\frac{1}{2}}} \left(\frac{hPf^2}{2.77 \times 10^{-5} f^2 + h^2 P^2} \right) \quad (5)$$

Finally, there are classical and rotational effects, m_{cr}:

$$m_{cr} = 3.6 \times 10^{-11} (1 + 0.001\ t)\ f^2/P \quad (6)$$

The total intensity attenuation coefficient m is therefore:

$$m = m_0 + m_N + m_{cr} \quad \text{metre}^{-1} \quad (7)$$

The factor, m, appears in the well known expression for absorption of the intensity of sound:

$$I = I_o e^{-mx} \quad (8)$$

where I_o = initial intensity

x = distance in meters for m in meter $^{-1}$

In the literature one also finds the attenuation constant A_o where $A_o = m \cdot 4.343$ to yield A_o in dB/meter when m is expressed in meter $^{-1}$.

The English version for A_o (dB/ft) is found by straightforward conversion of length units:

$$A_o\ (\text{dB/ft}) = \frac{A_o\ (\text{dB/meter})}{3.282}$$

Thus far we have found an expression for the intensity attenuation coefficient, m, and the attenuation constant, A_o. To obtain the sound pressure coefficient one simply realizes that sound pressure is proportional to the square root of sound intensity. Equation (8) becomes

$$P^2 = P_o^2\ e^{-mx} \quad (9)$$

Solving for P:

$$P = P_o\ e^{-\frac{m}{2} x} = P_o e^{-\alpha x} \quad (10)$$

Since $m = A_o/4.343$ it is clear that

$$\alpha = A_o/8.686 \quad (\text{ft}^{-1} \text{ for } A_o \text{ in dB/ft}) \quad (11)$$

To illustrate how the attenuation constant, A_o (dB/ft) varies with T & R.H. a table and graph is included in this report for both 50kHz and 60 kHz. See figures 1 and 2.

ATTENUATION CONSTANT AS A FUNCTION OF
TEMPERATURE AND RELATIVE HUMIDITY

F	15%	20%	25%	30%	35%	40%	45%	50%	55%	60%	65%	70%
3	.2162	.2570	.2984	.3387	.3764	.4104	.4398	.4642	.4833	.4975	.5070	.5124
8	.2456	.2973	.3480	.3950	.4362	.4703	.4968	.5157	.5276	.5335	.5343	.5311
3	.2823	.3462	.4056	.4567	.4972	.5264	.5447	.5537	.5551	.5505	.5418	.5302
8	.3272	.4033	.4687	.5189	.5526	.5710	.5767	.5730	.5626	.5479	.5309	.5127
3	.3807	.4671	.5330	.5751	.5952	.5981	.5889	.5723	.5516	.5291	.5063	.4842

O&R date 7/5/79 M.J. Cirella

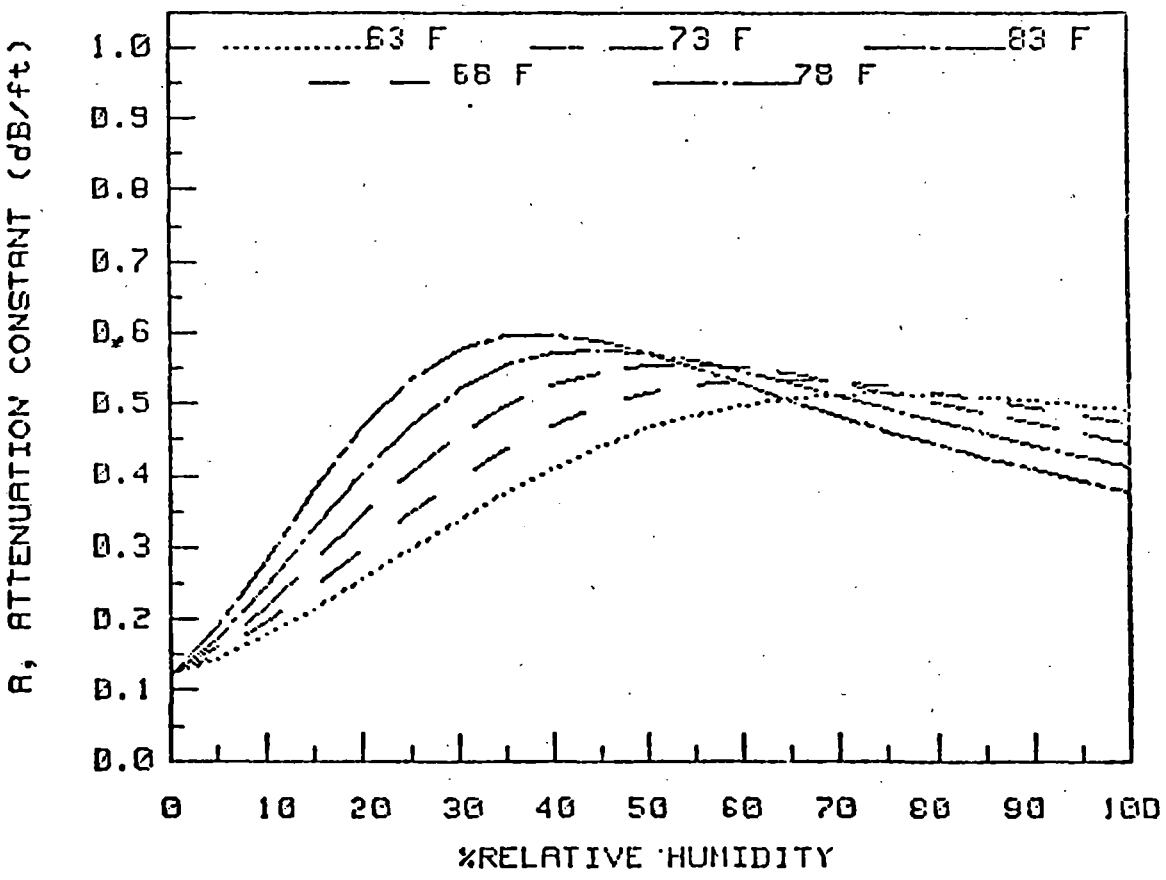

FREQUENCY: 50000 Hz PRESSURE: 1 Atm.

Ficure 1

ATTENUATION CONSTANT AS A FUNCTION OF
TEMPERATURE AND RELATIVE HUMIDITY

15%	20%	25%	30%	35%	40%	45%	50%	55%	60%	65%	70%
.2699	.3116	.3547	.3977	.4394	.4787	.5147	.5466	.5740	.5967	.6147	.6283
.2999	.3534	.4073	.4593	.5076	.5504	.5869	.6165	.6391	.6550	.6650	.6698
.3377	.4048	.4701	.5300	.5818	.6238	.6556	.6774	.6902	.6953	.6943	.6884
.3843	.4666	.5422	.6063	.6561	.6909	.7118	.7206	.7200	.7122	.6995	.6835
.4410	.5381	.6204	.6823	.7225	.7430	.7476	.7406	.7256	.7058	.6833	.6596

&R date 7/5/79 M.J. Cirella

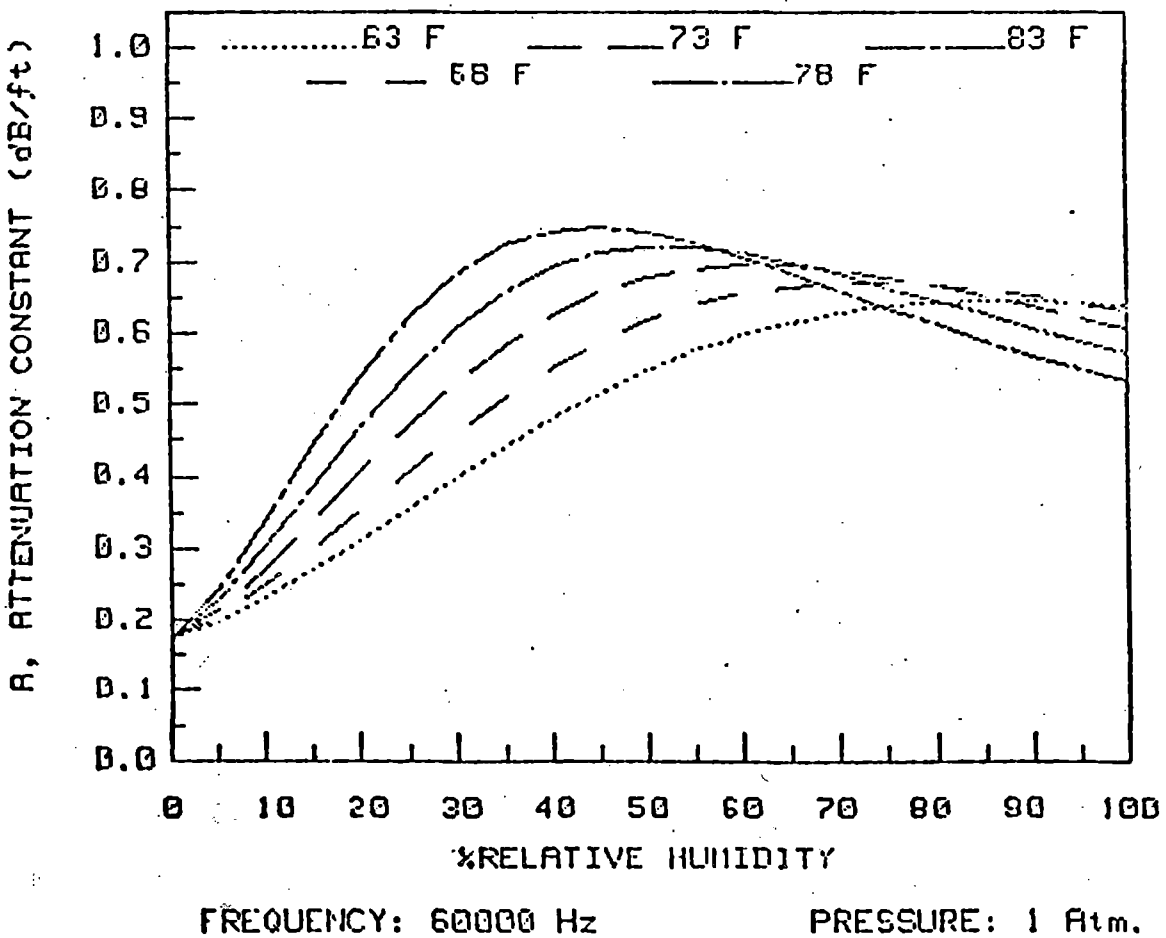

FREQUENCY: 60000 Hz PRESSURE: 1 Atm.

Figure 2

CT/IC3497

November 19, 1980 P. KEHLER'S PRESENTATION

Dr. N. N. Kondic
RSR Division, Willste Bldg.
U.S. Nuclear Regulatory Commission
Washington, D.C. 20555

Dear Ned:

Subject: Measurement of Water Level in Power Plants, Using Nuclear Techniques

References:

1. Paul Kehler, "Water Level Measurement in PWR Cores by Pulsed Neutron Activation Techniques," in Proc. of the USNRC Review Group Conference on Advanced Instrumentation for Reactor Safety Research, Edited by A. L. Hon and T. Weber, NUREG/CP-0007, November 1979.

2. D. N. Fry et al., "Advances in Noise Analysis for Nuclear Plant Surveillance and Diagnostics," Paper presented at the Eight Water Reactor Safety Research Information Meeting, Gaithersburg, Maryland, October 1980.

3. EPRI, "Summary of EPRI and Utility Sponsored Research in Non-Invasive Reactor Vessel Water Level Monitoring," Paper presented at the Eight Water Reactor Safety Research Information Meeting, Gaithersburg, Maryland, October 1980.

Fully realizing that the NRC has already chosen the most promising level measuring technique (heated thermocouples), as well as two backup systems (Δp - measurement and external neutron ratio method), I still would like to forward to you some comments on two nuclear methods that, I believe, warrant further study by the NRC. These methods can be considered to be combinations of techniques proposed by me last year (Ref. 1) with two new techniques proposed this year by ORNL (Ref. 2) and EPRI (Ref. 3). Details of the two proposed level measuring techniques are as follows:

Level Measurement by Attenuation of Neutrons in Water

I have shown previously (Ref. 1) that enough D,T neutrons will penetrate the thick walls of reactor vessels to interact measurably with the core of the reactor. This fact could be used to enhance the very low counting rates found in the technique being proposed by EPRI. EPRI now must use counting times in the order of 1,000 sec to get statistically meaningful numbers of

Dr. Ned Kondic November 19, 1980

Level Measurement by Attenuation of Neutrons in Water (Contd.)

counts. A pulsed D,T neutron source, positioned at locations on the reactor that do not permit direct irradiation of the two EPRI-counters, will most likely increase the number of counts and thus make the EPRI technique faster and more reliable. It should not take too much additional effort to install a pulsed neutron source and irradiate the LOFT core during the EPRI test planned at the LOFT for December, 1980.

Level Measurement by Measuring the Reactivity of the Core

In Ref. 1, I have also suggested that the water level in reactors be measured by measuring the reactivity of the core. This technique has the advantage that only the water in the core, but not the water level in the downcomer will effect the reading. In Ref. 1, I have suggested several ways in which the reactivity of cores could be measured using a pulsed neutron source and specially developed detectors. Now, during the last RSR meeting, ORNL has presented a novel technique for reactivity measurements, involving relatively simple detectors and a steady-state capsule neutron source. This equipment is much simpler and more rugged than the equipment proposed by me in Ref. 1, and its feasibility for measuring water levels should, in my opinion, be looked into. ANL has the capability to assess, analytically, the effects of control rod position and boron content of the coolant on the water level reading, using the core reactivity method. Using this capability, we would be willing to support ORNL's experimental work by expanding their new reactivity measuring technique to water level detection in reactors.

Very Truly Yours,

Paul Kehler
Components Technology Division

PK:nh

cc: Y. Y. Hsu, NRC
A. L. Hon, NRC

IN-VESSEL WATER LEVEL GAUGE

BASED ON NEUTRON THEMALIZATION

V. Orphan

Science Applications, Inc.
Instrumentation/Experimental Programs Department
4030 Sorrento Valley Blvd.
San Diego, CA 92024

October 30, 1980

PROPOSED APPROACH

- Use proven neutron thermalization moisture gauge - small (1-20 μg ^{252}Cf) neutron source and ^{235}U-lined fission counter.

- Gauges permanently installed in existing guide tube(s) (ID ≥ 2.5 in) about two feet apart from top of core to top of vessel.

- Alternatively, gauge can be translated along guide tube.

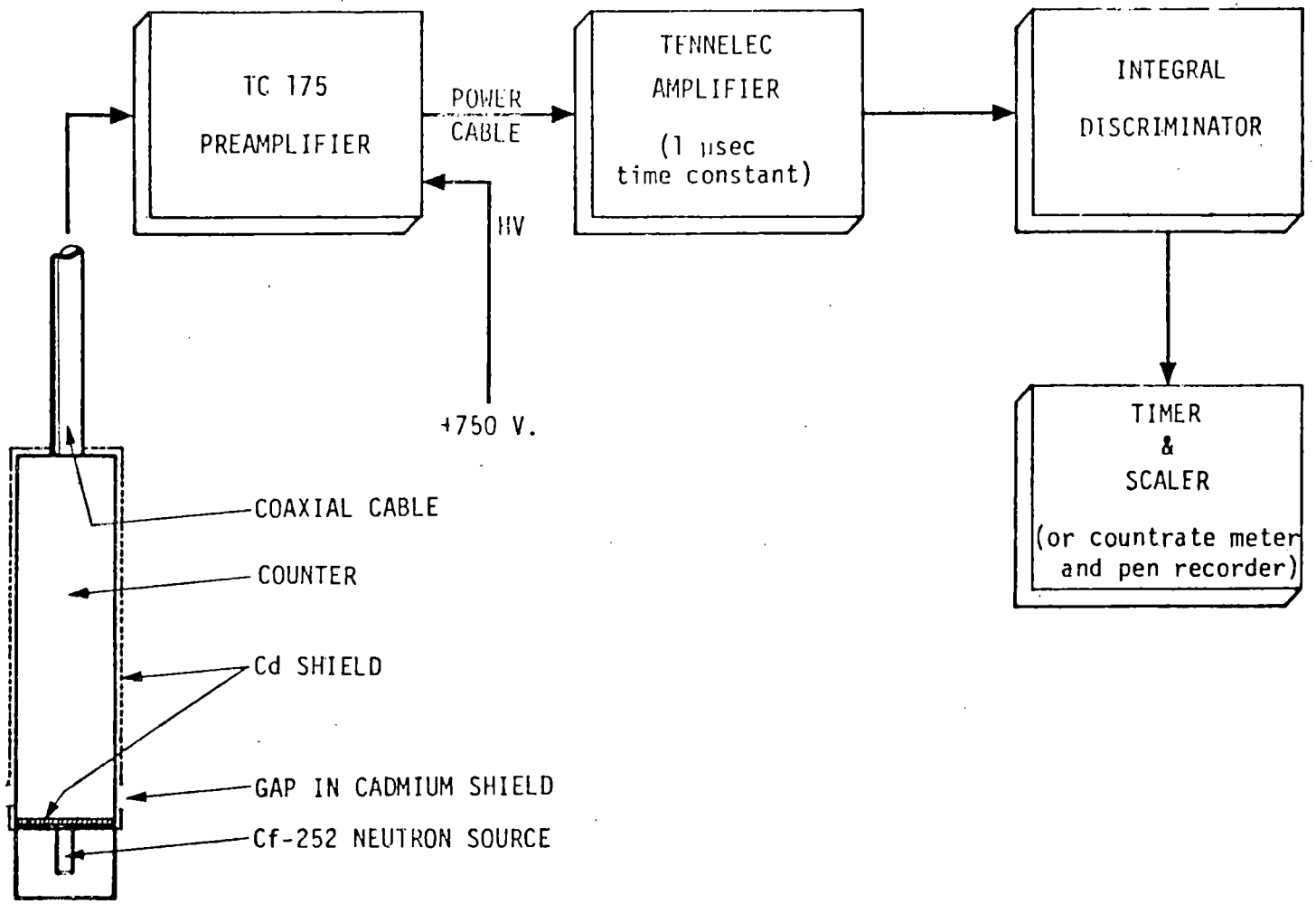

Figure 1. Schematic Diagram for Moisture Meter.

	A	INITIAL RELEASE

1. REFLECTOR BLOCKS (ITEM 10&11) MAY BE ARRANGED AND SUBSTITUTED AS DESIRED.
2. HEAT SHRINK TUBING (ITEM 15) SHALL BE PLACED OVER COUNTER (ITEM 14) AND CADMIUM NEUTRON SHIELD (ITEM 7) BEFORE INSERTING INTO ASSEMBLY.

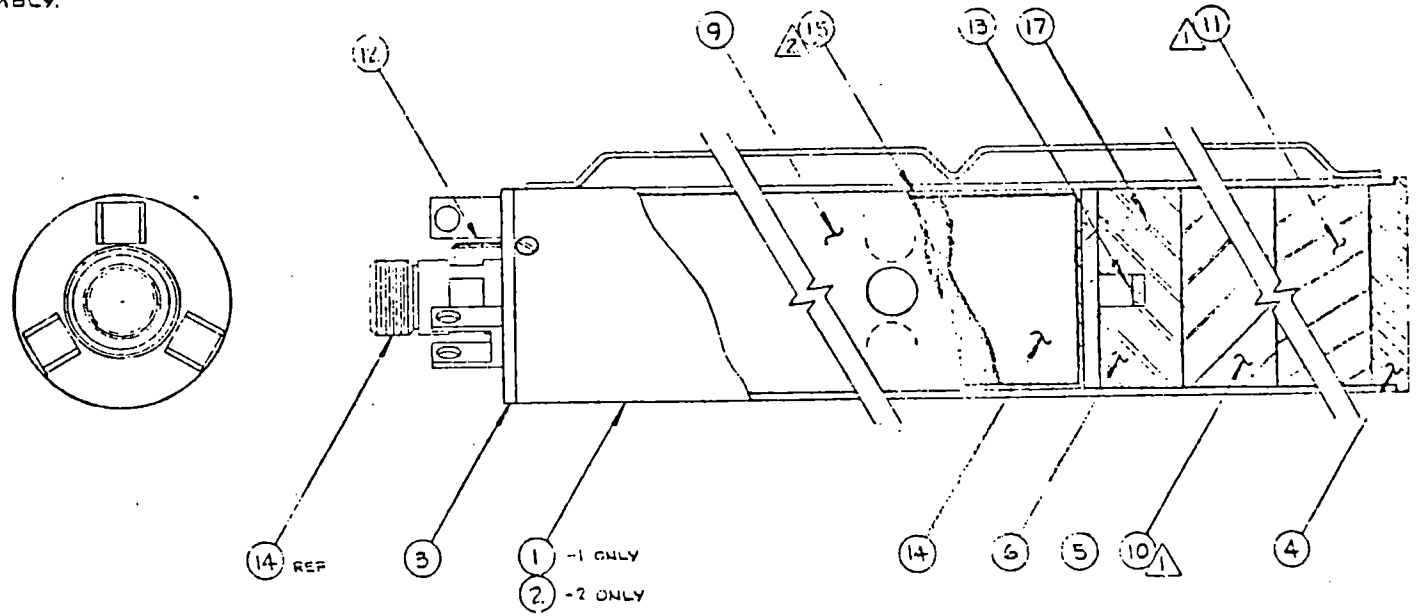

120

SEE SEPARATE PARTS LIST 999-0013

-2	-1	CODE IDENT NO	PART OR IDENTIFYING NO	NOMENCLATURE OR DESCRIPTION	MATERIAL AND SPECIFICATION	ITEM NO
QTY REQD						

LIST OF MATERIAL

ITEM NO	PART NO	NEXT ASSY	USED ON
		APPLICATION	

UNLESS OTHERWISE SPECIFIED DIMENSIONS ARE IN INCHES
TOLERANCES ARE
DECIMALS: X ±, XX ±, XXX ±
ANGLES ±
MATERIAL
FINISH

CONTRACT NUMBER

		DATE
PREPARED	DAWesterfield	7-7-79
CHECKED		
APPROVED		
APPROVED		
QA		
REL		

SAI A DIVISION OF SCIENCE APPLICATIONS, INC.

TITLE: ASSEMBLY – MOISTURE GAGE

SIZE	CODE IDENT NO	DWG NO	REV
C		999-0013	A

SCALE 1/1 | SHEET 1 OF 1

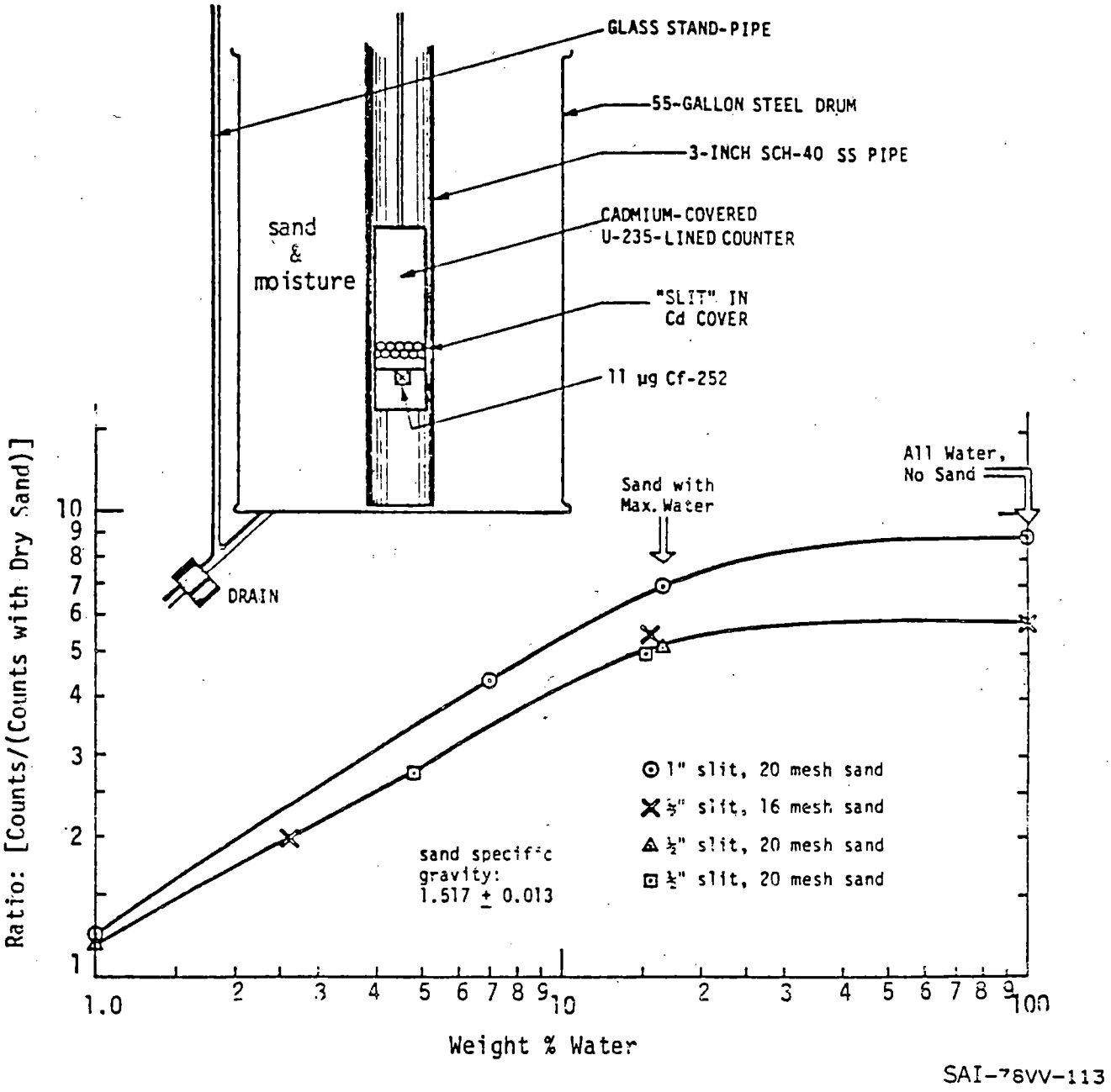

Figure 4-12. Ratio of Count Rate With Moisture Content Shown (Abscissa) to Count Rate With Dry Sand.

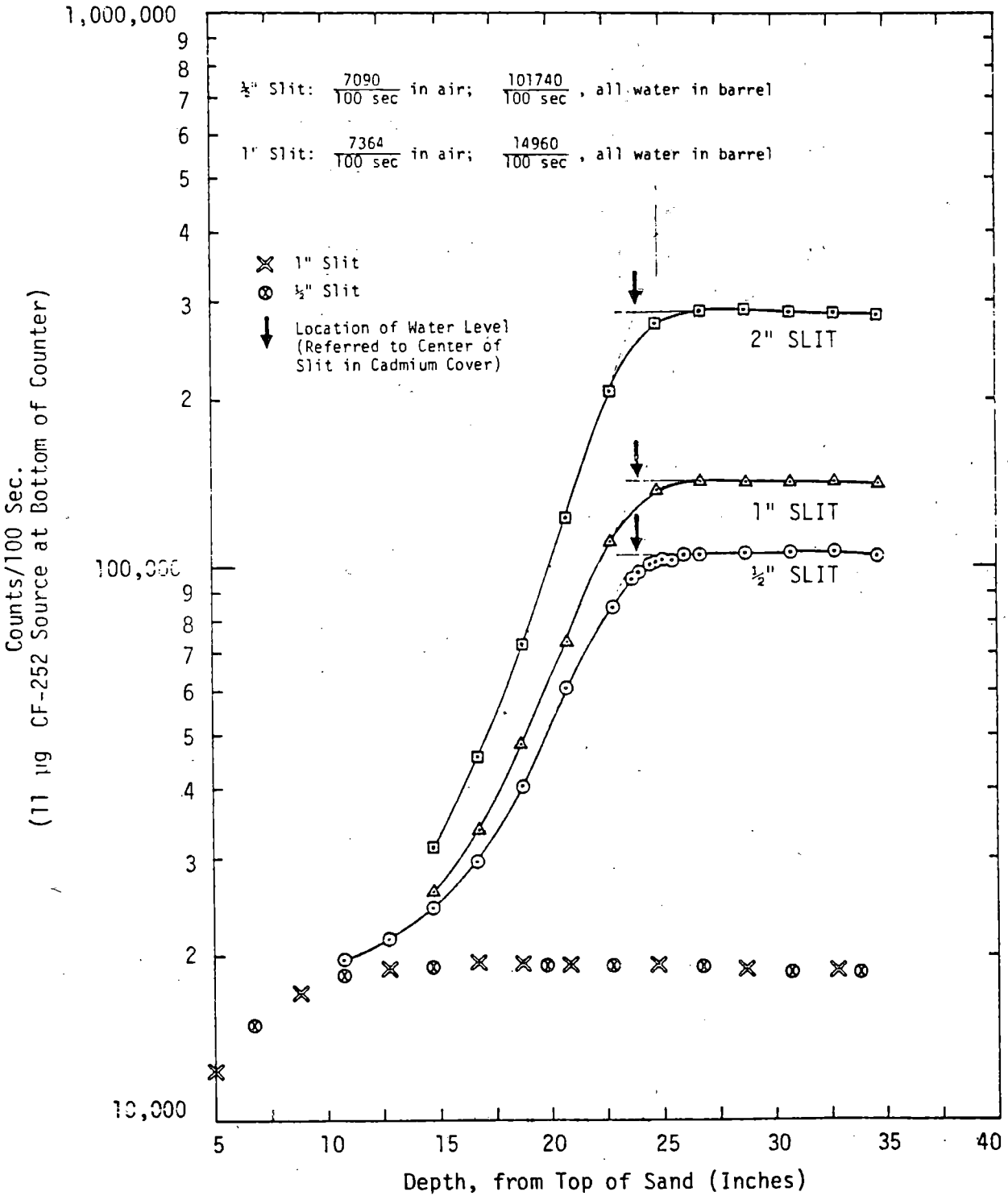
1,000,000
9
8
7
6
5
4
3
2
100,000
9
8
7
6
5
4
3
2
10,000
½" Slit: 7090/100 sec in air; 101740/100 sec, all water in barrel
1" Slit: 7364/100 sec in air; 14960/100 sec, all water in barrel
1" Slit
½" Slit
Location of Water Level (Referred to Center of Slit in Cadmium Cover)
2" SLIT
1" SLIT
½" SLIT
Counts/100 Sec.
(11 µg CF-252 Source at Bottom of Counter)
5
10
15
20
25
30
35
40
Depth, from Top of Sand (Inches)

SCHEMATIC OF NEUTRON THERMALIZATION WATER LEVEL INSTRUMENT

Assume:

- o 1 μg ^{252}Cf source
- o Fission Counter
  - 2.0 in x 7 1/8" long (sens. length)
  - 0.7 cps/nv
- o 60 sec counting time

$$Ci = \frac{\text{counts with water nearby}}{\text{counts with air}}$$

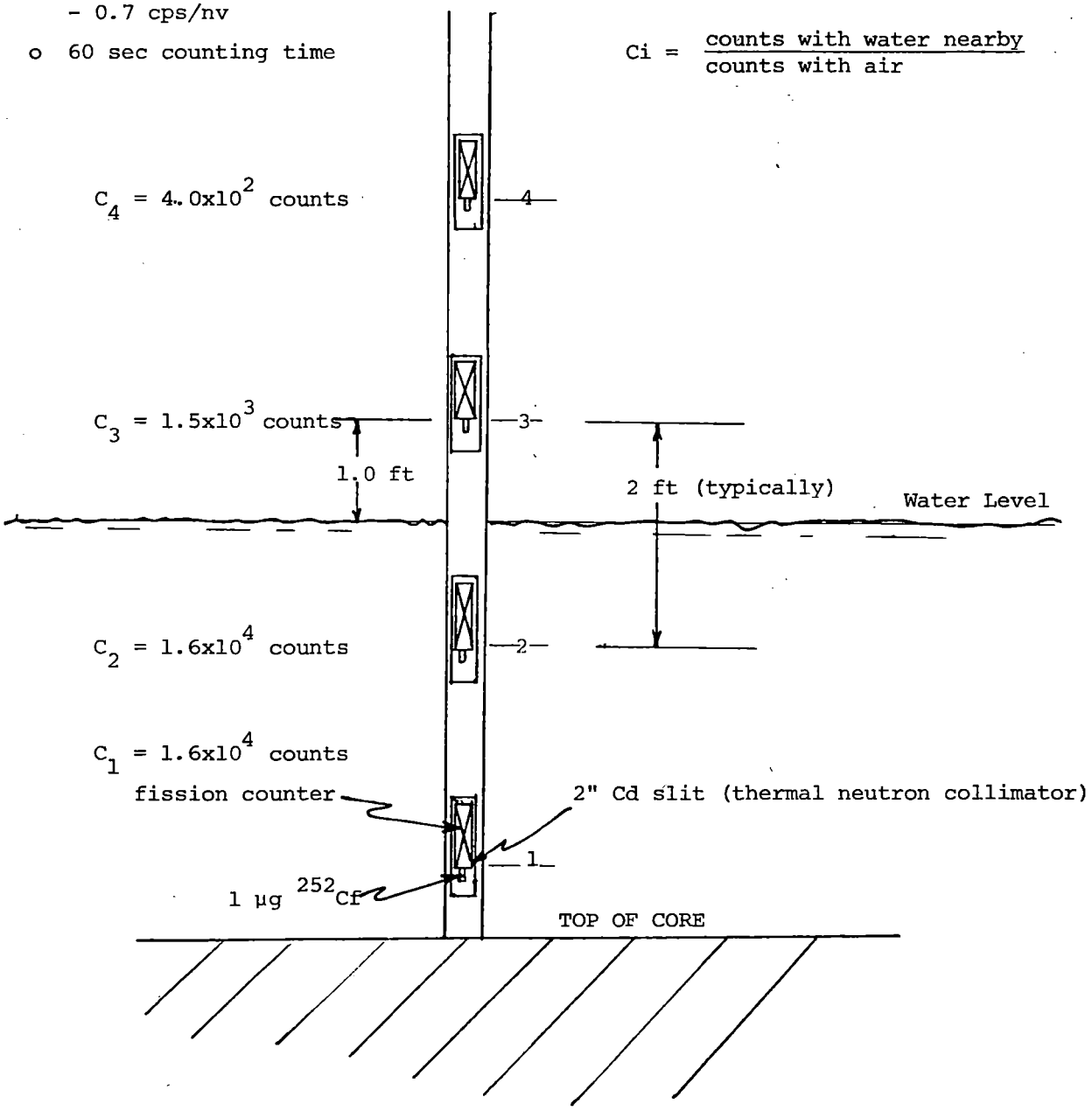

ADVANTAGES

- Semi-intrusive - gauge protected from vessel environment by guide tube.
- Excellent water level accuracy - $\pm$ 1 inch possible.
- Uses proven components - fission counter qualified for reactor applications (source range monitor).
- Accuracy not strongly affected by time after shutdown.
- Response time quite good ($\sim$2 min for 1 μg ^{252}Cf).
- Relatively insensitive to local thermal hydraulic phenomena.

DISADVANTAGES

- Does not function when reactor at power (may be able to work near vessel top).

- Less sensitive just above core because of high thermal neutron background (from photoneutrons).

- Difficult to implement in core region.

- Change in ^{10}B concentration in coolant could affect accuracy.

R. DUFFEY

SUMMARY OF EPRI AND UTILITY SPONSORED RESEARCH IN NON-INVASIVE REACTOR VESSEL WATER LEVEL MONITORING

September 1980

1. INTRODUCTION

Following the incident at Three Mile Island, National Nuclear Corporation (NNC) was directed by EPRI to investigate the possibility of measuring water level within a PWR vessel using non-invasive radiation measurement techniques. Since that time, several tests have been made using various neutron detector assemblies in experimental tests and at commercial reactor plants.

This summary presents a review of the tests that have been conducted, the details of the detector assemblies used, and discusses the experimental results obtained. A status report on current and planned future research in this area is also included.

2. PAST TESTS

A. NCC Laboratory Tests

During June and July 1979, NCC conducted several experimental feasibility tests of the ability of ^{3}He neutron detectors to measure water level in an experimental water tank facility. Both top and side detectors were used in the tests.

The tests were conducted in a large 9 foot diameter, 11 foot high cylindrical tank filled with water (9,000 gallons). Another identical tank was placed nearby to store the water as the water level in the first tank was lowered during the experiments.

A 1.6mg (4×10^{9} neutron/sec) Cf-252 source was used as the neutron source and was located in a thimble in the center of and three feet above the bottom of the tank.

The neutron detectors used in these tests consisted of twelve Reuter Stokes ^{3}He proportional counters, 1 inch in diameter, 24 inches active length, jacketed in aluminum, filled to 4 atmospheres pressure. The tubes were contained in a plastic moderator assembly 30 inches long, 24 inches wide, and 12 inches deep. The detector assembly was mounted on the top of the water tank above a 4 inch thick steel plate, used to simulate a PWR vessel head.

Plastic and boronated plastic was placed above and to the sides of the detector assembly to simulate the concrete shielding above a PWR vessel head.

The side detector consisted of one ^{3}He proportional counter, 1 inch in diameter, and 4 inches active length.

Tests were conducted by observing the top and side counting rates using 100 second counting intervals for various water levels.

The tank test results indicate that the side detector response is relatively insensitive to the water level. The top detector response is weakly sensitive for water level above 100cm above the source (3.3 feet) and strongly sensitive for water levels below 100cm. The ratio of side-to-top counting rates appears to give a more clear indication of water level measurement. The results indicate measurement trends and are not intended for detailed evaluation or application. In addition, it is felt that the proximity of the second water storage tank with its changing water level may have adversely affected these results.

B. Tests at Prairie Island

During the winter of 1979, tests were made using unshielded ^{3}He detectors at the Prairie Island nuclear plant in Minnesota under Northern States Power sponsorship. The measurements were taken two months after shutdown. Definitive results were not obtained as Co-60 gamma rays from the vessel completely obliterated the signals in the unshielded detectors.

C. Tests at Rancho Seco

During March 1980, tests were conducted at the Rancho Seco reactor plant in California under EPRI sponsorship.

A single BF_3 neutron detector two inches in diameter, 24 inches active length, with a 30 mil aluminum jacket was used in the tests. The cylinderical detector assembly consisted of the detector surrounded by 3/8 inches of polyethelene and then ½ inches of lead, to shield against gamma rays.

The tests were conducted about three months after shutdown. The detectors measured only a few counts above background, leading to large errors in the counting statistics.

D. Tests at Trojan

During April 1980, tests were conducted at the Trojan reactor plant in Oregon under EPRI sponsorship.

The same identical detector assembly used in the Rancho Seco tests was used in the Trojan tests to measure neutron flux at the top of the reactor vessel.

Count rate intervals of 1000 seconds were used during these tests. Measurements indicated the background radiation to be 55 counts per 1000 seconds inside the containment on the refueling ledge, and 69 counts per 1000 seconds at the measurement location above the vessel head when the vessel was full of water. The gamma radiation at the detector location was measured to be 200 mr per hour. Background radiation outside the containment measured 222 counts per 1000 seconds.

Side detector data was also taken from the Trojan source range detectors, but these data were found to be too erratic for use.

The results substantiate the detector response of increased counting rate with decreasing water level above the core as seen in the NNC laboratory tests. The results do, however, indicate significant differences: the slope of the corrected results in the Trojan tests is found to be -0.00115 ± 0.00016 cps per foot (in the 8 to 20 foot range above the core) as compared to a slope of -0.589 cps per foot (in the 4 to 9 foot range above the source) as measured in the NNC tank tests. In addition, the attenuation lengths derived from these results after subtracting background counts are also different: approximately 12.0 feet from the Trojan results and approximately 4.8 feet from the NNC laboratory tests. These differences have not yet been fully explained.

3. PLANNED TESTS

Two testing programs are being planned to further test the ability of lead shielded BF^3 neutron detectors to measure water level above a reactor core. A test program similar to the one performed at the Trojan plant is planned to be conducted at the Farley Unit Two nuclear plant in Alabama in November. Additional tests are also planned to be conducted at the NRC LOFT facility in Idaho in late 1980.

A. Tests Planned at Farley

A testing program is planned at the Farley Unit Two reactor plant under EPRI sponsorship during a normal refueling shutdown currently scheduled for early November 1980, and during subsequent shutdowns. The tests during refueling will involve four detector assemblies temporarily placed upon the top of the vessel head while counting measurements are made for various water levels. These tests are planned to be conducted approximately three to four days after reactor shutdown.

Each of the detector assemblies for use in these tests will consist of two BF_3 neutron detectors two inches in diameter, two foot active length, jacketed in 30 mil stainless steel, each placed in a 2-1/8 inch ID and 3 inch OD lead pipe, and surrounded by polyethelene. Each of these detector assemblies measures approximately 6 x 10 x 30 inches, contains a 1/2 inch thick 8-1/2 x 30 inch lead plate on the bottom, and is housed in a 14 gage steel jacket. Each assembly weighs approximately 250 lbs. A drawing of the assembly including all measurements and details of the mounting brackets is given in Figure 1.

After these tests are performed, the four detector assemblies will be installed in the containment by suspending them from support ducts existing above the vessel. In addition to the top detector assemblies, a bottom director assembly has also been constructed and will be placed on the subpile room floor. This assembly consists of eight BF^3 tubes in an arrangement similar to the top detectors, all housed in one case. In addition, two B-10 high flux neutron counters will also be installed one above the vessel and one in the subpile room in order to monitor neutron flux during normal operation. The BF^3 detector assemblies will be operated only after complete reactor shutdown. The arrangement of these detectors is shown schematically in Figure 2.

Testing all these detectors in their installed locations is not expected to be accomplished until an anticipated future outage. Such an outage may be expected to occur before 1981. During such an outage, both top and bottom detector count rates will be recorded for various water level positions above the core. Both the top detector count rates and the ratio of top-to-bottom count rates will be examined as a function of water level above the core. Data from the source range neutron detectors located on the sides of the vessel will also be obtained for comparisons in the analyses.

B. Tests Planned at LOFT

An additional top detector assembly identical to those used in the Farley tests has been constructed for use in the NRC LOFT facility at EG&G, Idaho. Through mutual NRC and EPRI interest, a testing program is being planned to test the response of the detector assembly at the LOFT facility during low power operation and during a planned vessel blowdown and core uncovery test, expected in December 1980.

4. PROJECT MANAGEMENT

The tests planned at the Farley Unit Two nuclear plant and LOFT are part of EPRI research project RP 1611. Inquiries regarding further information, the status of these tests, and additional data should be formally addressed to Dr. Patrick G. Bailey at EPRI.

Figure 1. Design of Neutron Detector Assemblies to be Used in the Planned Tests at Farley Unit One and LOFT Above the Core

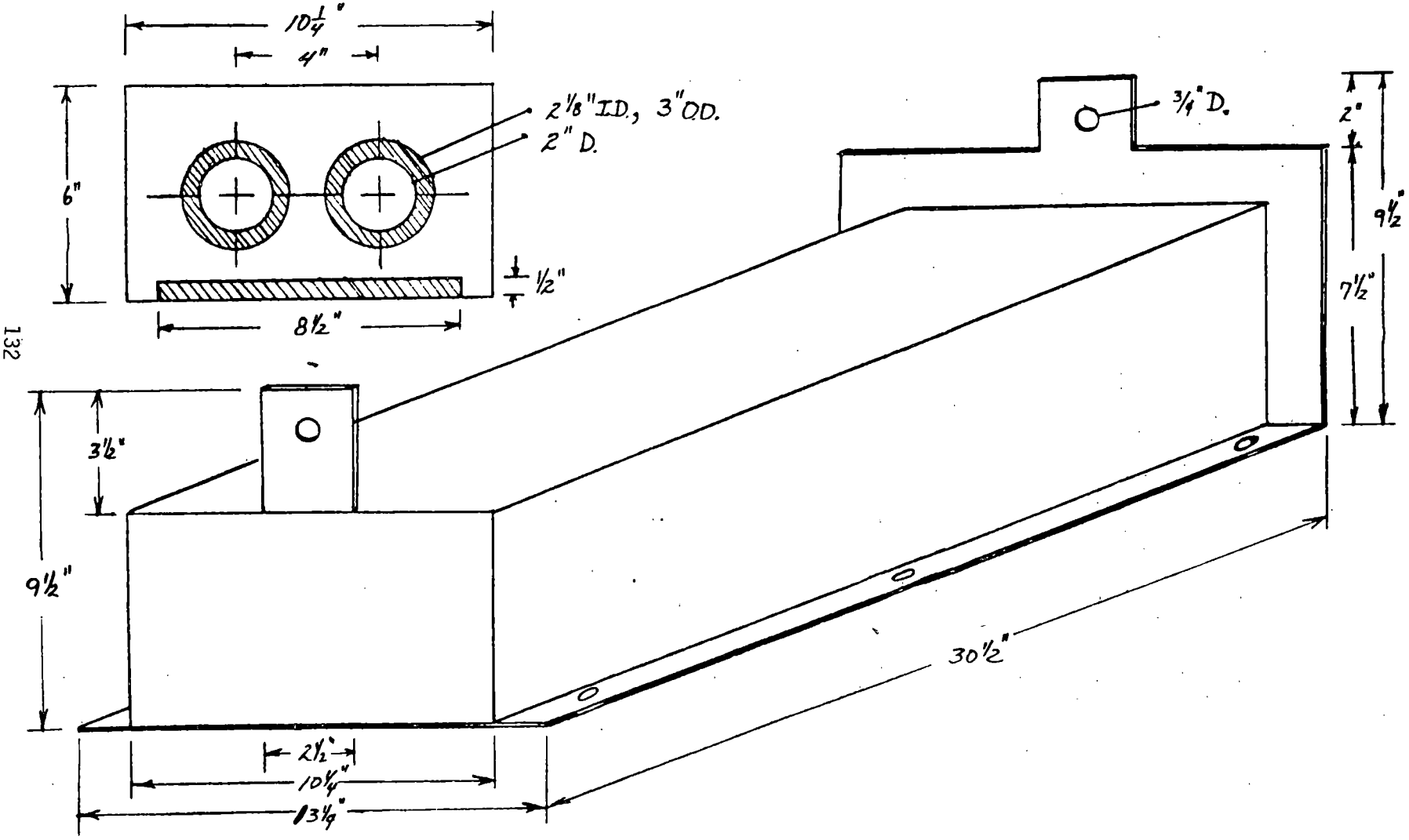

Figure 2. Schematic Arrangement of Detector Locations for the Farley Unit One Test.

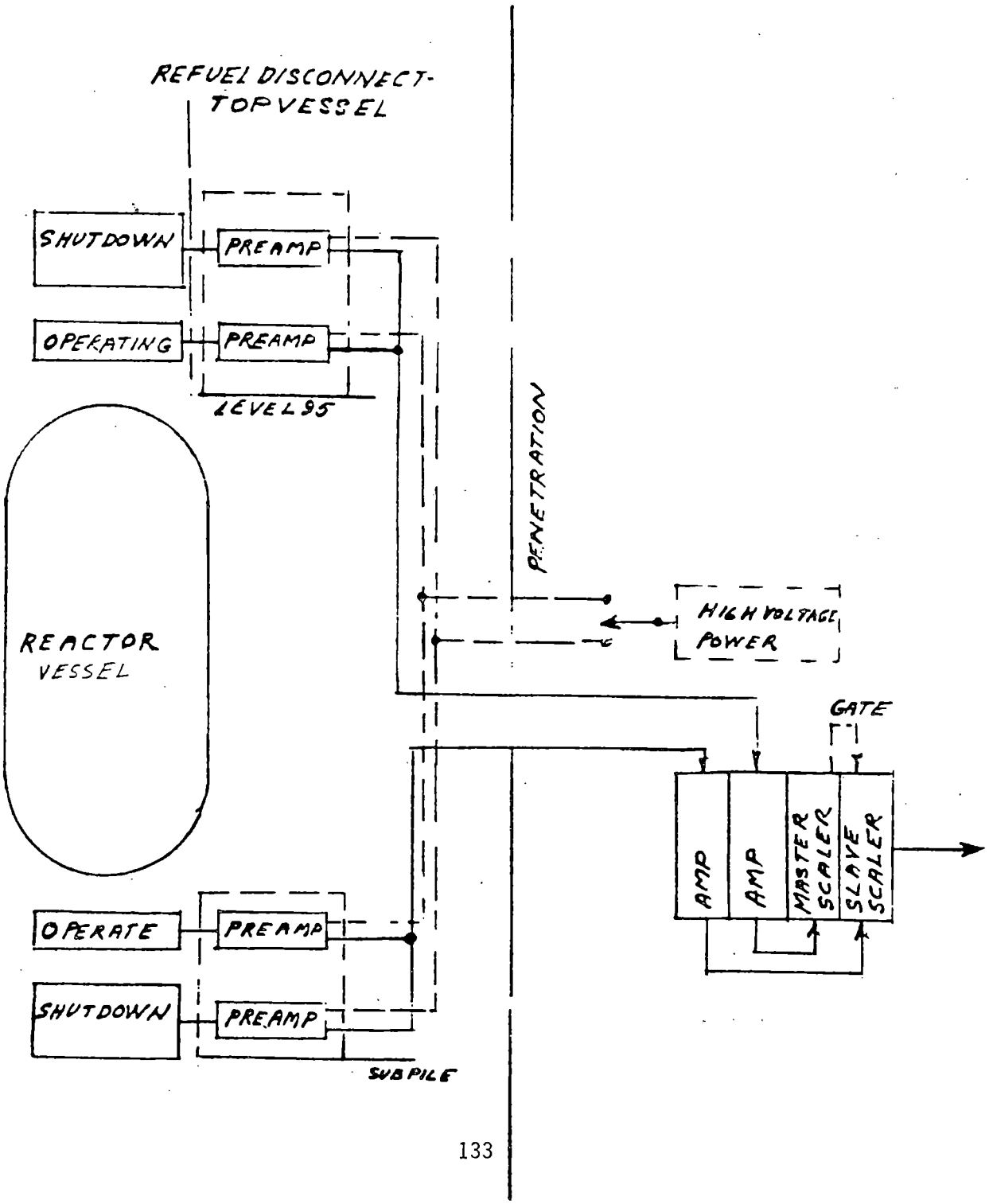

MICROWAVE LIQUID LEVEL GAUGE FOR USE IN A HIGH RADIATION ENVIRONMENT*

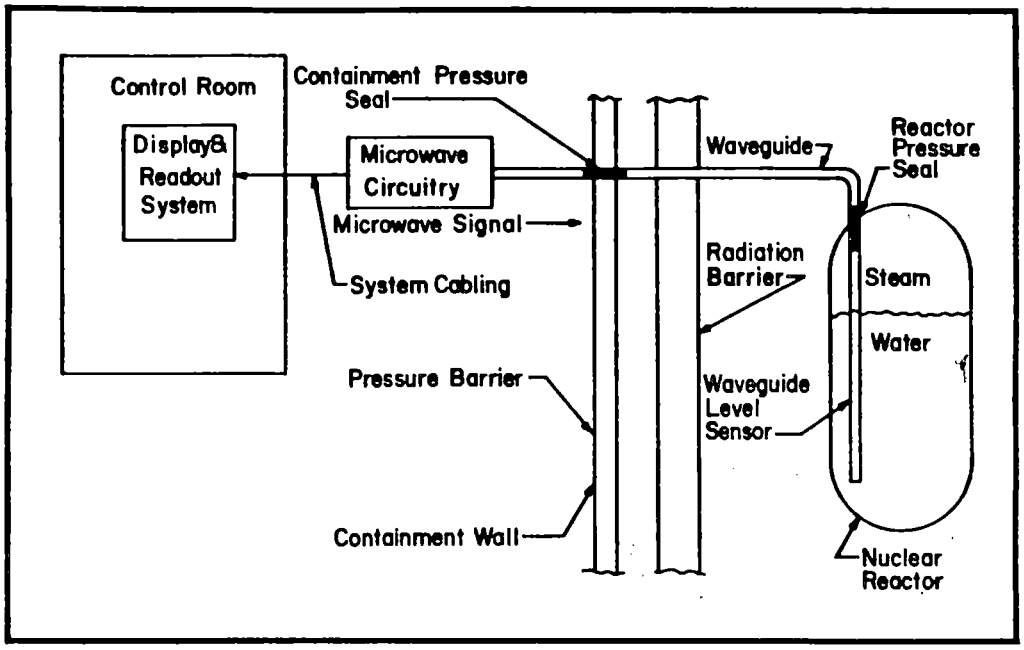

The Davco Microwave Liquid Level Gauge uses radar techniques to measure liquid level in a nuclear reactor environment. The use of a waveguide to propagate the signal allows the microwave circuitry to be located outside the reactor containment building. Since only the metal waveguide is located in the high radiation environment, long term trouble-free operation of the system is expected. The general layout of the system is shown above. The microwave signal enters the reactor vessel through a 3/8 inch or smaller glass seal. This seal uses a special radiation resistant glass that will operate properly in a 10^9 - 10^{10} rad environment and will withstand the temperature and pressures required.

* Patent Application No. 174,133

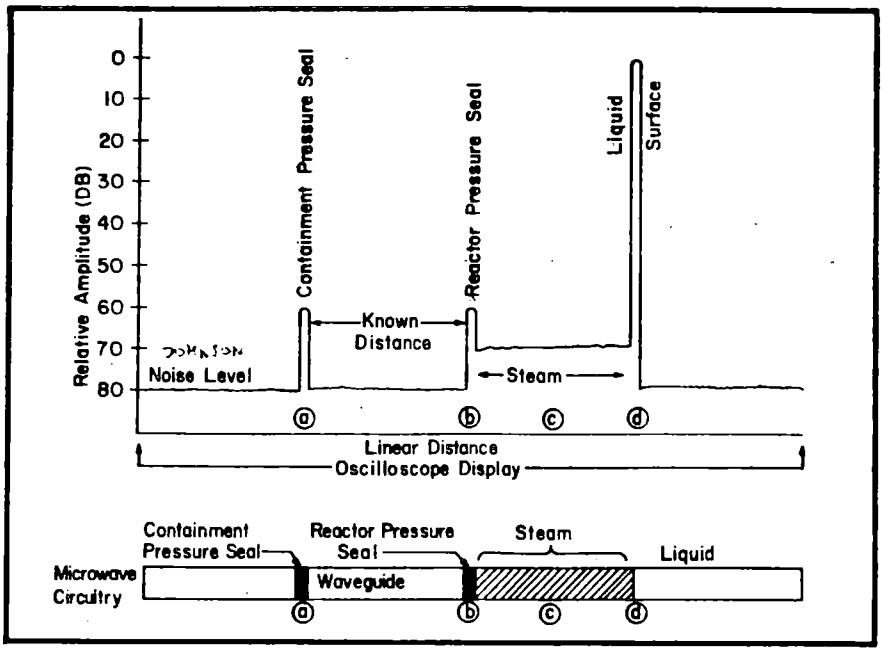

The display and readout system uses a frequency domain output format with the expected oscilloscope display shown in the top portion of the figure above. The bottom portion of the figure shows the waveguide with a horizontal axis of the same scale factor as the top. Located along the waveguide are several discontinuities marked (A) through (D). Shown in the top portion of the figure are the output signals corresponding to these discontinuities. The advantage of this display is that considerable information is available to the operator concerning the performance of the system under normal and abnormal reactor conditions.

JAMES LAWLESS

MICROWAVE LIQUID LEVEL GAUGE FOR USE IN A HIGH RADIATION ENVIRONMENT

PATENT APPLICATION NO. 174,133

Prepared by:

DAVCO MANUFACTURING CO.
169 Ridgedale Avenue
Morristown, N. J. 07960

Date: October 10, 1980

TABLE OF CONTENTS

		Page
1.0	INTRODUCTION	141
2.0	DISCUSSION	141
	2.1 TYPICAL SYSTEM SPECIFICATIONS	143
	2.2 MICROWAVE LEVEL DETECTOR	143
	2.3 TIME DOMAIN SIGNAL ANALYSIS	145
	2.4 FREQUENCY DOMAIN SIGNAL ANALYSIS.	145
3.0	PRESSURE VESSEL SEAL	149
	3.1 PRESSURE SEAL REQUIREMENTS	149
	3.11 ENVIRONMENT	150
	3.12 SERVICE LIFE	150
	3.2 PRESSURE SEAL DESIGN	150
	3.3 PRESSURE SEAL CONSTRUCTION	151
	3.31 CONE PRESSURE SEAL	151
	3.4 OPTICAL PENETRATION	153
4.0	IONIZATION EFFECTS	153
5.0	CONCLUSIONS	155

ILLUSTRATIONS

Figure (1)	TYPICAL REACTOR INSTALLATION	142
Figure (2)	MICROWAVE LEVEL DETECTOR	144
Figure (3)	SWEPT FREQUENCY WAVEFORMS	146
Figure (4)	FREQUENCY DOMAIN DISPLAY	148
Figure (5)	PRESSURE SEAL CONSTRUCTION	152

1.0 INTRODUCTION

Davco Manufacturing Co. has designed a Liquid Level Gauge (Patent Application No. 174,133) for use in a high radiation environment. The gauge operates in a manner similar to a radar except that the signal propagates down a waveguide immersed in liquid rather than through the atmosphere. Since only the waveguide is located in the radiation environment, long term reliable operation is expected from the system. Figure (1) shows a typical reactor installation.

2.0 DISCUSSION

Radar has been used to measure the distance to remote objects since the middle 1930's. These radars usually employed a short pulse of radio frequency energy which was bounced off of a distant object with the total travel time measured using electronic means. Since the radio frequency signal traveled at the speed of light (186,000 miles/sec., approximately 1×10^9 ft./sec.), the distance to the object could be determined. The difficulty with a pulsed system is that the minimum range is determined by the pulse width. For example, a one microsecond pulse would require a one thousand

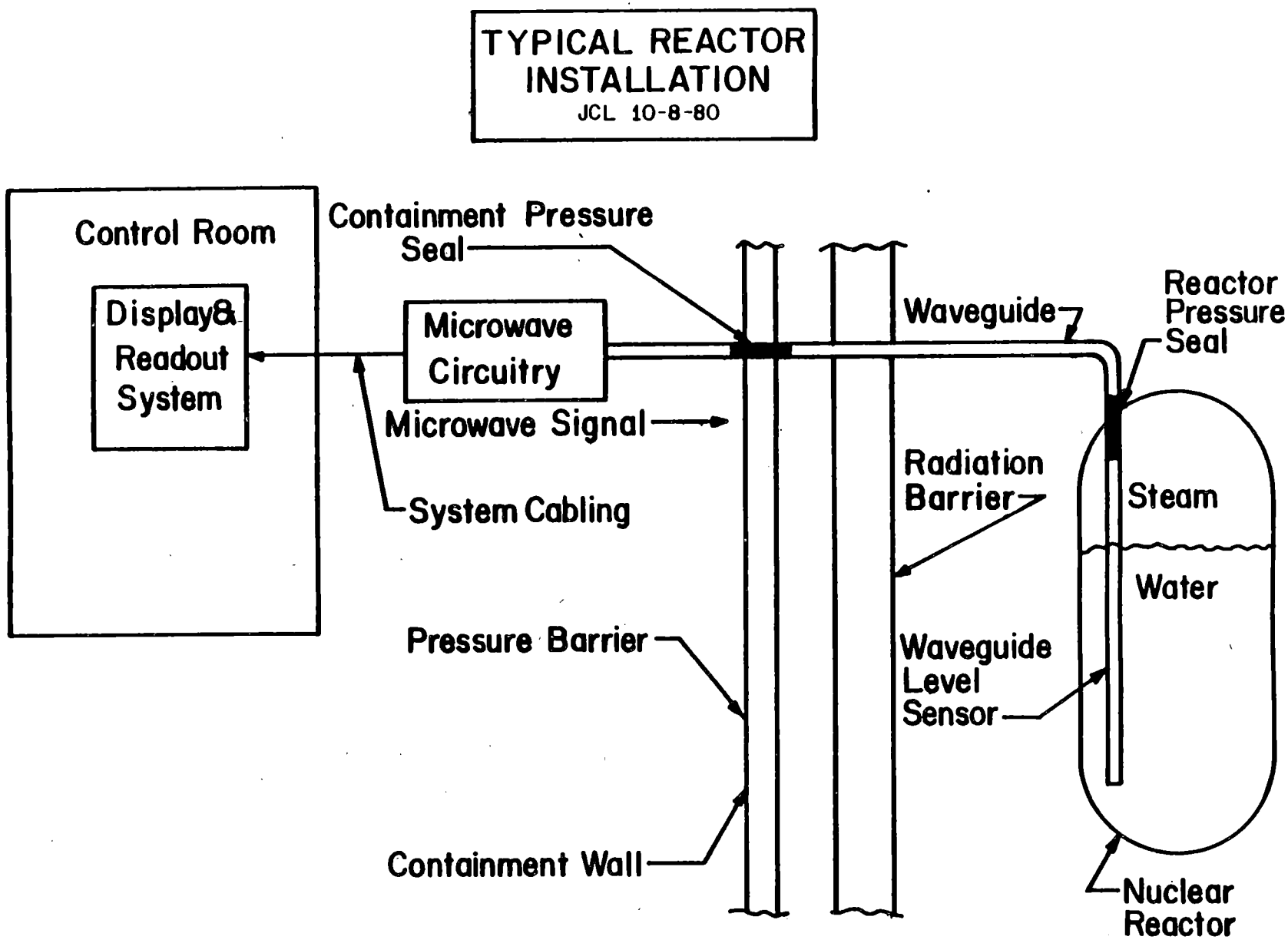
TYPICAL REACTOR INSTALLATION
JCL 10-8-80
Control Room
Display & Readout System
Containment Pressure Seal
Microwave Circuitry
Microwave Signal
System Cabling
Waveguide
Reactor Pressure Seal
Radiation Barrier
Steam
Water
Pressure Barrier
Waveguide Level Sensor
Containment Wall
Nuclear Reactor

Figure 1

foot minimum round trip distance (1×10^{-6} sec. X $1 \times 10^{+9}$ ft./sec. = 1,000 ft.). Such a radar would be impractical as a level gauge. There is another form of radar more readily adaptable to level measurements called a swept frequency radar. The Liquid Level Gauge uses swept frequency radar techniques.

2.1 TYPICAL SYSTEM SPECIFICATIONS

(a)	Range	1 ft. to 500 ft.
(b)	Accuracy	1% of range from known point
(c)	Measurement Time	Less than 1 second
(d)	Level Sensor	1" pipe waveguide
(e)	Display	Digital readout and/or spectrum analyzer/FFT presentation

2.2 MICROWAVE LEVEL DETECTOR

The block diagram of the microwave level detector is shown in Figure (2). The output of the swept microwave oscillator is a linear ramp function of frequency vs. time. This signal passes through a directional coupler and isolator to Port 1 of the Magic Tee. Here the signal is divided equally between the two colinear arms (Port 2, Port 3). Port 2 is

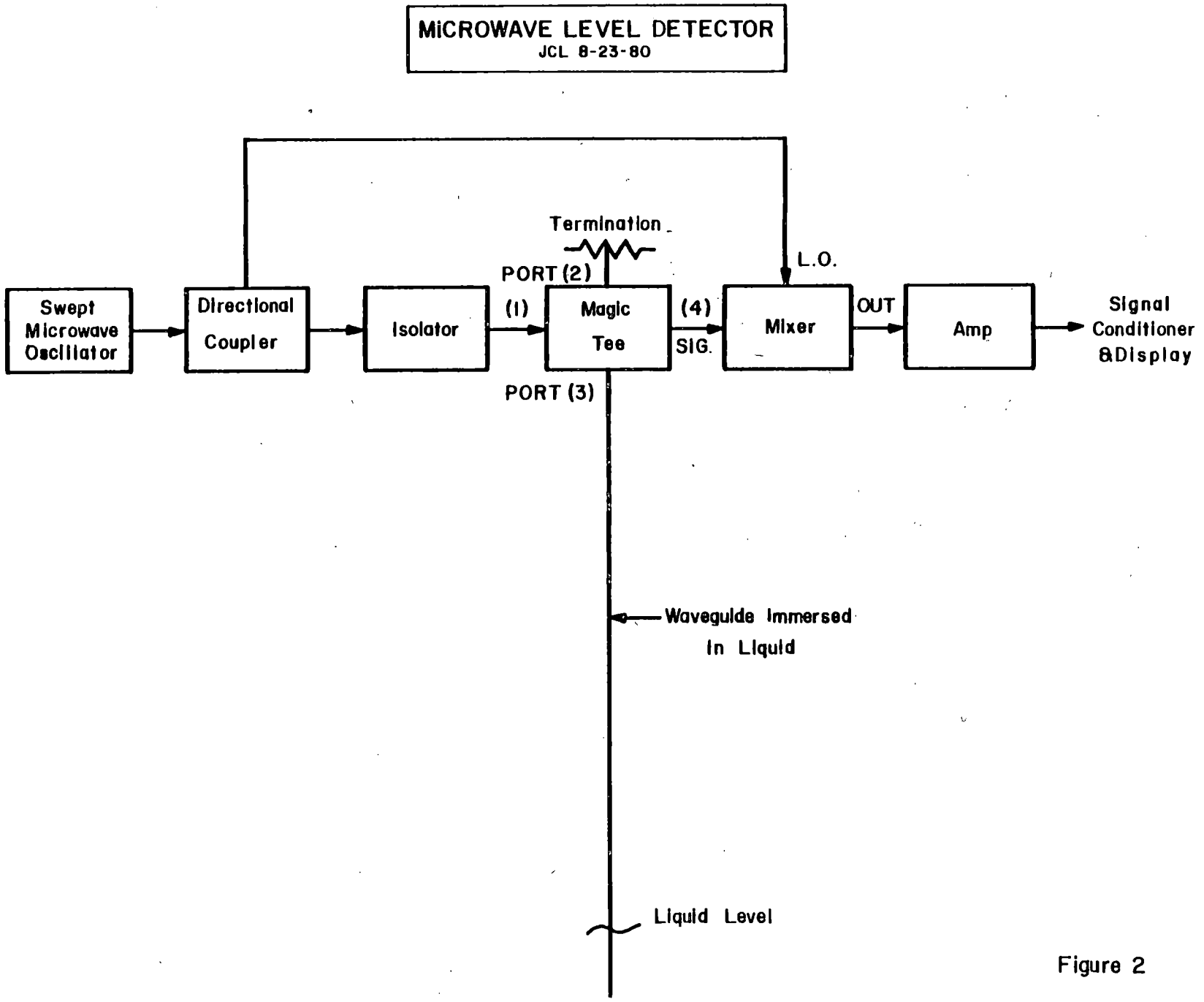
MICROWAVE LEVEL DETECTOR
JCL 8-23-80
Termination
PORT (2)
L.O.
Swept Microwave Oscillator
Directional Coupler
Isolator
(1)
Magic Tee
(4)
SIG.
Mixer
OUT
Amp
Signal Conditioner & Display
PORT (3)
Waveguide Immersed In Liquid
Liquid Level

Figure 2

terminated in a matched load so that all the energy is dissipated without reflection. Port 3 is connected to a waveguide which is immersed in the liquid whose level is to be measured. The signal propagates down the waveguide and is reflected off the liquid level in the waveguide. The signal travels back up the waveguide and re-enters Port 3 of the Magic Tee. The signal then divides equally between Port 1 and 4, with the signal at Port 1 being absorbed by the isolator. The output of Port 4 is applied to the input of a mixer where it is compared to the reference signal (local oscillator) sampled from the sweep oscillator via the directional coupler. The output of the mixer is a frequency proportional to the time delay experienced by the signal in the waveguide. The output frequency is amplified to a usable level and applied to the signal analyzing circuitry of the system.

2.3 TIME DOMAIN SIGNAL ANALYSIS

The swept frequency vs. time waveform is shown in Figure (3). The (A) waveform is the output signal from the swept oscillator. As can be seen, this signal is a linear ramp of frequency vs. time varying between the limits of 9 and 10 GHz. This signal propagates through the

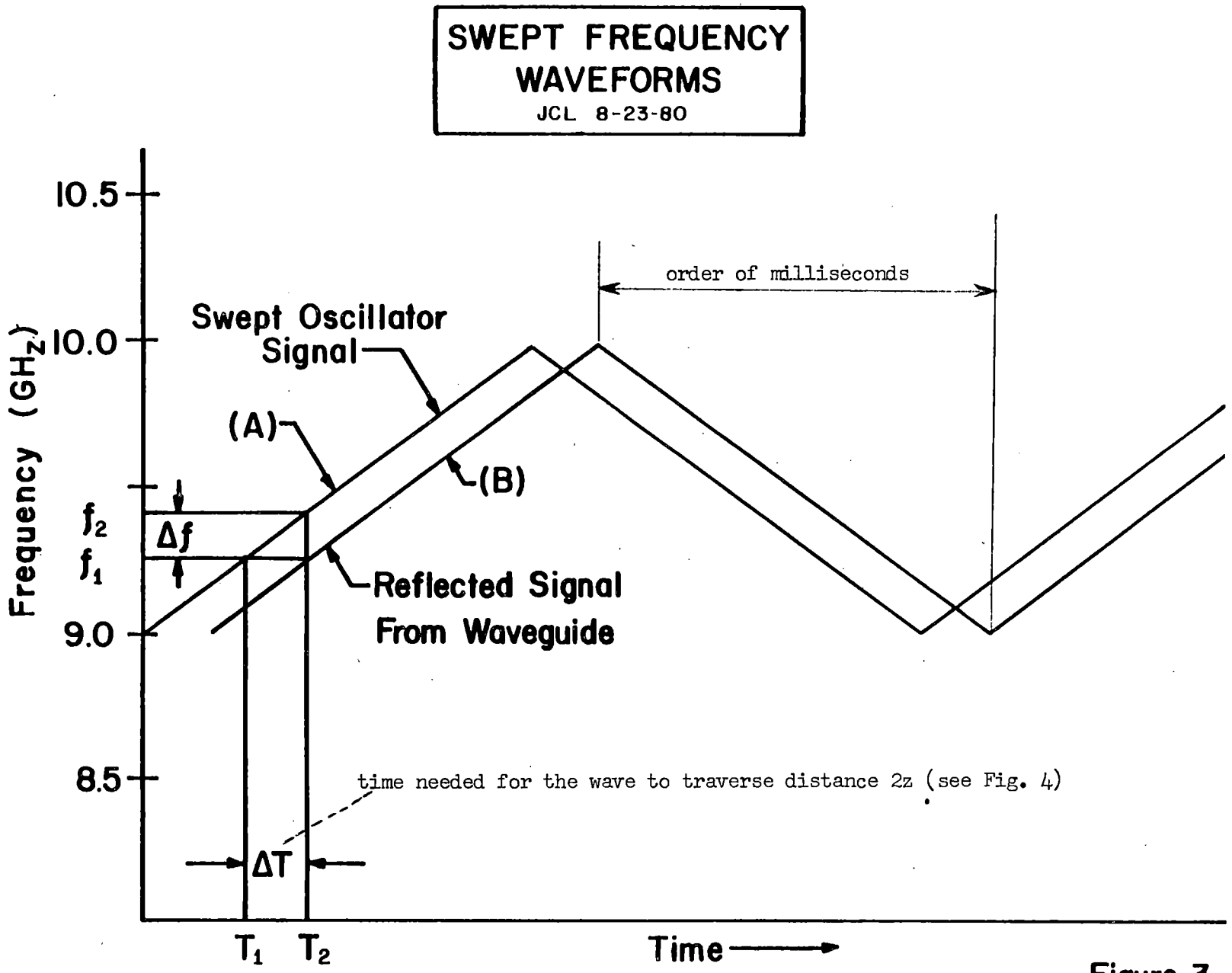
SWEPT FREQUENCY
WAVEFORMS
JCL 8-23-80
10.5
10.0
9.0
8.5
Frequency (GHz)
order of milliseconds
Swept Oscillator
Signal
(A)
(B)
f_2
Δf
f_1
Reflected Signal
From Waveguide
time needed for the wave to traverse distance 2z (see Fig. 4)
ΔT
T_1
T_2
Time

Figure 3

Magic Tee down the waveguide, reflects off the liquid termination and back up the waveguide. Waveform (B) is this signal after it passes through the Magic Tee and is outputted on Port 4. The diagram shows that the waveforms (A) and (B) are identical except that (B) is delayed in time by (ΔT). If at time T_2 frequencies f_1 and f_2 are compared in the mixer, Δf is obtained as an output. A typical scale factor ($\Delta f/z$) of 300 Hz/ft is obtained from the system. By placing a digital counter on the output of the mixer, the frequency/distance can be determined very accurately.

2.4 FREQUENCY DOMAIN SIGNAL ANALYSIS

A frequency domain signal analysis is obtained by putting a time domain signal* through a frequency spectrum analyzer or a software Fast Fourier Transform (FFT) program. The spectrum analyzer/FFT program produces a framing format with the vertical axis being signal amplitude and the horizontal axis frequency/distance. Figure (4) shows the expected output from the microwave level gauge. The top diagram in Figure (4) shows the amplitude of the output signal in (DB) vs. linear distance (frequency). The bottom of the page shows the waveguide with a horizontal

*e.g. amplitude/vs. time, as displayed on the oscilloscope screen.

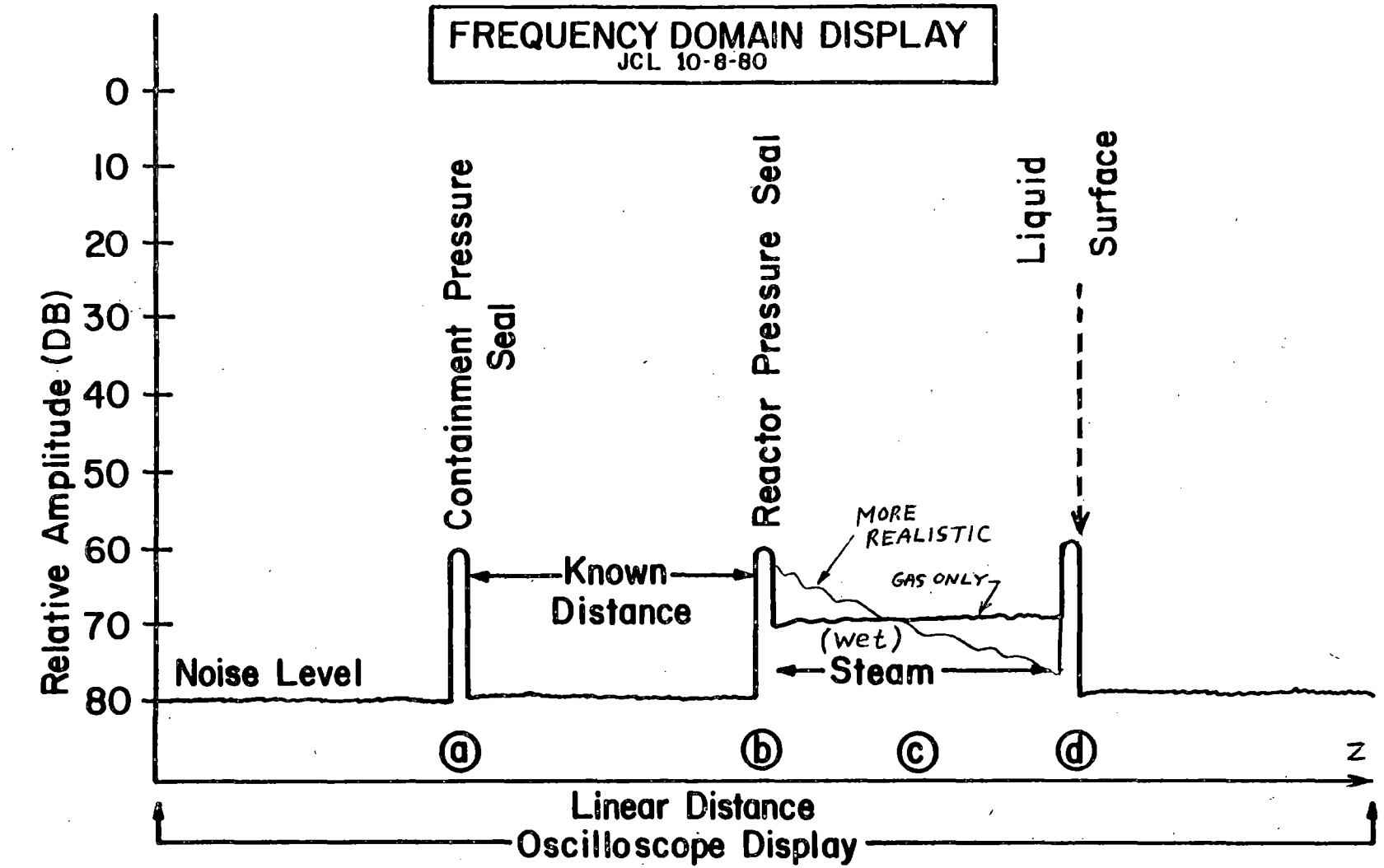
FREQUENCY DOMAIN DISPLAY
JCL 10-8-80
Relative Amplitude (DB)
0
10
20
30
40
50
60
70
80
Containment Pressure Seal
Reactor Pressure Seal
Liquid Surface
MORE REALISTIC
GAS ONLY
(wet)
Known Distance
Steam
Noise Level
a
b
c
d
z
Linear Distance
Oscilloscope Display

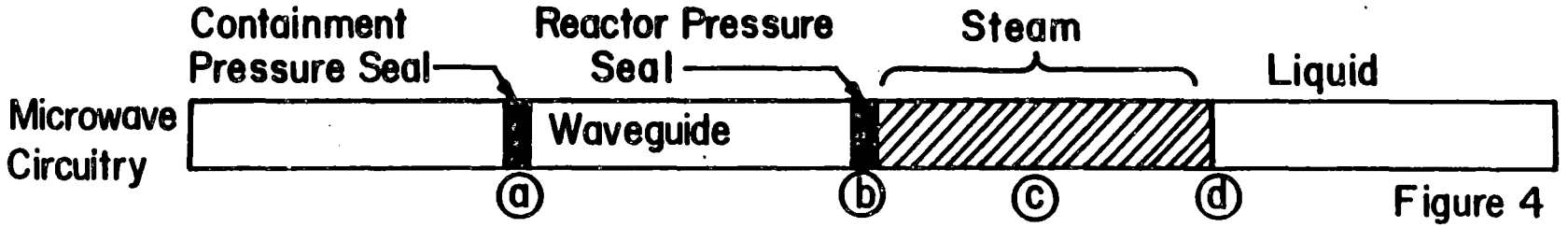
Containment Pressure Seal
Reactor Pressure Seal
Steam
Liquid
Microwave Circuitry
Waveguide
a
b
c
d

Figure 4

axis with the same scale factor as the linear distance of the top figure. Located along the waveguides are several discontinuities as follows:

(a) Containment Pressure Seal

(b) Reactor Pressure Seal

(c) Steam

(d) Liquid Surface

Shown in the top of Figure (4) are the output signals corresponding to the discontinuities. The advantage of this type of output display from the microwave level gauge is that considerable information is available to the operator concerning the performance of the system.

3.0 PRESSURE VESSEL SEAL

The penetration of the reactor is the most serious aspect of the level measuring system from the potential accident standpoint. This section will address this situation and offer viable solutions.

3.1 PRESSURE SEAL REQUIREMENTS

The pressure seal must operate in the hostile reactor environment, insure reactor vessel integrity, and be transparent to microwave energy. The following is a list

of the requirements that must be met by the pressure seal.

3.11 ENVIRONMENT

		NOMINAL	MAXIMUM
(a)	Temperature	600° F	900° F
(b)	Pressure	2,500 PSI	4,000 PSI
(c)	Radiation	30×10^3 rad/hr.	40×10^3 rad/hr.

3.12 SERVICE LIFE

(a)	Transparent to Microwave Energy** . . .	10 years
(b)	Retain Pressure Integrity	40 years

3.2 PRESSURE SEAL DESIGN

The pressure seal will be designed using a cerium optical glass which will meet the environmental and service life requirements stated in Section 3.1 above. A 3/8 inch diameter penetration into the reactor will be used to simplify qualification requirements. The lowest usable microwave frequency with a 3/8 inch penetration is calculated as follows:

** Seal may be changed periodically (during the refueling operation).

E = Dielectric Constant $\approx$ 5 for glass

D = 3/8 inch diameter

$$f_{min} = \frac{6.92}{\sqrt{E}\ D} = \frac{6.92}{\sqrt{5} \times 3/8} = 8.25 \text{ GHz}$$

The Microwave Liquid Level Gauge will use a 10 GHz nominal center frequency.

3.3 PRESSURE SEAL CONSTRUCTION

The construction of the pressure seal is shown in Figure (5). The microwave signal enters the seal assembly via the rectangular waveguide on the right hand side of Figure (5). The signal then propagates through the 3/8 inch diameter glass-filled circular waveguide to the glass-filled cone pressure seal. The signal emerges into the one-inch circular waveguide which acts as the liquid level sensor.

3.31 CONE PRESSURE SEAL

The cerium glass can withstand a stress in excess of 10,000 PSI in compression and shear. To distribute the stresses evenly, a soft graphite gasket is placed between the glass cone and the stainless steel (S.S.) flange.

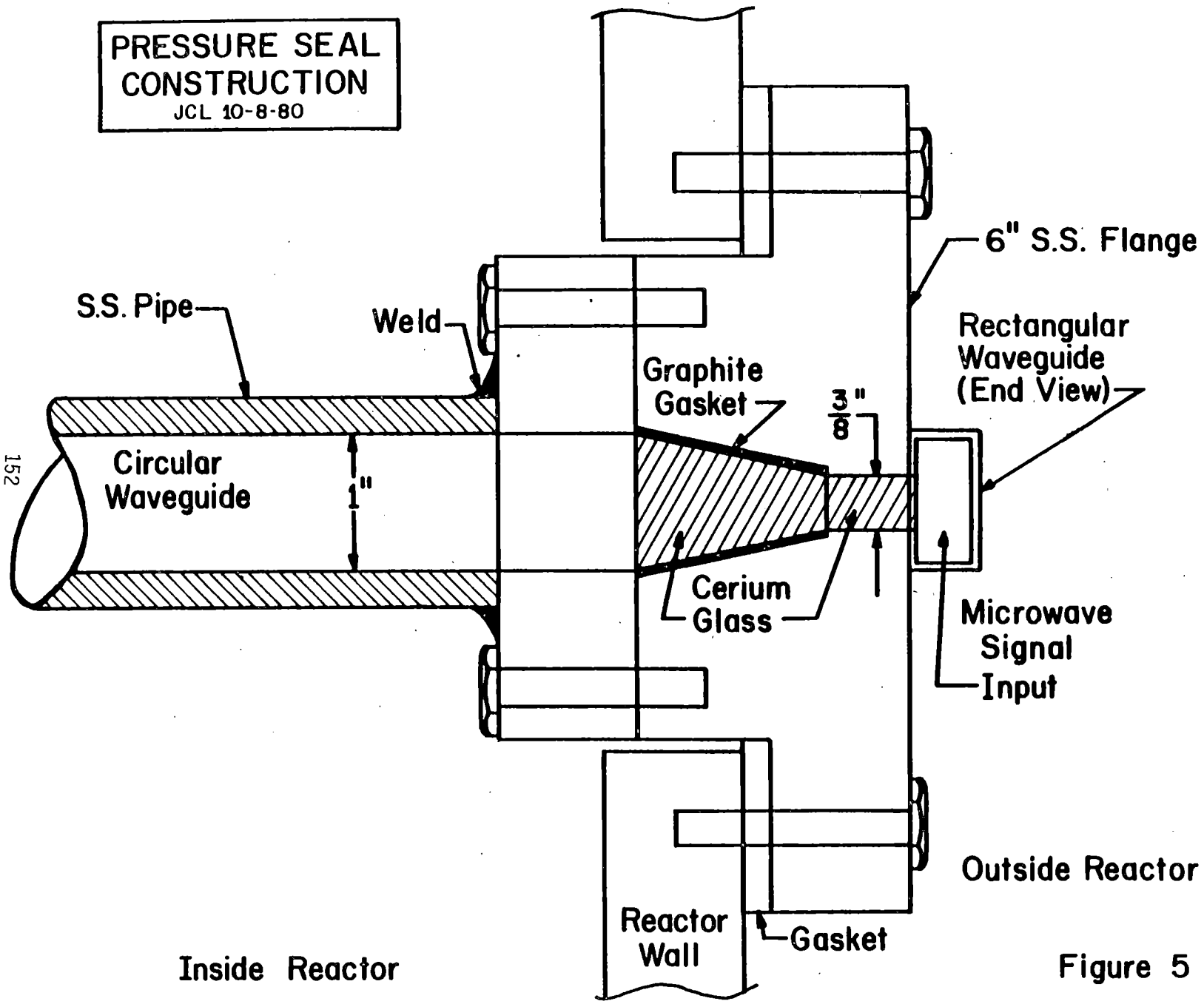
PRESSURE SEAL
CONSTRUCTION
JCL 10-8-80
6" S.S. Flange
S.S. Pipe
Weld
Rectangular
Waveguide
(End View)
Graphite
Gasket
3/8"
Circular
Waveguide
1"
Cerium
Glass
Microwave
Signal
Input
Outside Reactor
Reactor
Wall
Gasket
Inside Reactor

Figure 5

3.4 OPTICAL PENETRATION

Since the pressure vessel seal will be fabricated using an optical quality glass, it seems reasonable to consider an optical penetration into the vessel. If a fiber optic cable is used to interface to a remote TV camera, a radiation resistant system will be realized. By splitting the fiber bundle into two sections, light can be transmitted into the pressure vessel by one section and a TV image sent out by the other. The main benefit of the optical penetration is the capacity to continuously monitor both the pressure vessel interior and the seal performance. For if the seal will pass an optical signal it will also pass a microwave signal.

4.0 IONIZATION EFFECTS

A microwave signal will pass through or be reflected by an ionized layer depending upon the microwave signal frequency and the level of ionization. The following formula determines the lowest frequency that will pass through an ionized layer:

N = Free electrons/cm^3

f = Frequency (Hz)

$$f_{min} = 8979 \sqrt{N} \quad (1)$$

(1) Plasma Diagnostics with Microwaves, M. A. Heald and C. B. Wharton; John Wiley and Sons, 1965. pp. 3,4.

The following table shows the ionization level for microwave signal frequencies from 10 GHz through 100 GHz. Below 10 GHz, the required penetration hole diameter into the reactor gets too large; above 100 GHz, the cost of microwave components gets prohibitively expensive.

FREQUENCY (GHz)	IONIZATION (N)	REACTOR PENETRATION HOLE DIAMETER (IN.)
10	1.24×10^{12}	0.309
31.6	1.24×10^{13}	0.100
100	1.24×10^{14}	0.0309

The level of ionization in the reactor will depend on location within the vessel. The order of magnitude of ionization can be estimated by its visual effect. The following gives a general idea of the ionization level by this visual effect.

COLOR	FREE ELECTRONS/cm^3
Blue Glow	10^9
Bright Yellow Flame	10^{13}

Since the operating reactor produces a blue glow, little trouble from ionization effects is expected from the Microwave Liquid Level Gauge.

5.0 CONCLUSIONS

The Microwave Liquid Level Gauge offers a direct and radiation resistant method of accurately determining the liquid level in a nuclear reactor. Using a digital counter readout will give an accurate indication of liquid level in the reactor. A spectrum analyzer/Fast Fourier Transform display will give the operating personnel a measurement of the relative performance of the system to a given confidence level. The spectrum analyzer display offers considerable information to be used in a diagnostic sense during abnormal functioning of the nuclear reactor.

APPENDIX *

State of the Art for Liquid Level Measurements Applied to In-vessel Coolant Level for Nuclear Reactors

by

R. L. Anderson
Instrumentation & Controls Division
Oak Ridge National Laboratory
Oak Ridge, Tennessee 37830

By acceptance of this article, the publisher or recipient acknowledges the U.S. Government's right to retain a nonexclusive, royalty-free license in and to any copyright covering the article.

Research sponsored in part by Division of Reactor Safety Research, U. S. Nuclear Regulatory Commission under Interagency Agreements DOE 40-551-75 and 40-552-75 with the U. S. Department of Energy under Contract W-7405-eng-26 with the Union Carbide Corporation.

* Not presented at the meeting.

I. Introduction.

In the weeks following the mishap at Three Mile Island, Unit 2, the initial analyses of the incident pointed to the strong probability that a direct indication of the liquid level in the reactor vessel itself would have provided the operators with a clear indication that the core was being uncovered. Consequently, a state of the art survey was begun at the request of the Research Branch of the U. S. Nuclear Regulatory Commission. Although the original survey was made about 18 months ago, it is satisfying to note that, with minor exceptions, the original evaluation is still valid and has indeed been confirmed by other independent surveys.

As a result of the "Lessons Learned" report study of the TMI incident the Nuclear Regulatory Commission issued a requirement in revision 2 of RG 1.97 for "an unambiguous indication of the approach to indequate core cooling" . It has generally been agreed that this requirement can be met by measuring the liquid level in the reactor vessel. There are some differing opinions which maintain that no additional instrumentation is needed, but that the requirements can be met by existing instrumentation, in particular the core-exit thermocouples. The validity of this claim is beyond the intended scope of this report which shall be confined to the the variety of means available or under development at this time for the measurement of in-vessel liquid level.

II. The Scoping Survey

Even a relatively quick survey of available process instrumentation can uncover prehaps 25 to 30 different methods for the measurement of liquid level. One-half to two-thirds of these can be dismissed out-of-hand as inappropriate for use in a pressurized vessel . Level measurement methods which remained after this first stage selection process are listed in Table I.

Table I

1. Heated thermocouple
2. Ultrasonic
3. Differential pressure
4. Neutron source & detector
5. R. F. probe
6. Floating source
7. Bouyant force
8. External standpipe with float sensor
9. Time-domain reflectometry
10. Microwave resonant cavity
11. Capacitance
12. Conductance

Of these, those which include detection of mechanical motion (floats, etc.) were ruled out because over the long term, wear of the moving part could either result in binding or the release of a float into the coolant system. Experience at both INEL and ORNL with conductance probes has been good, but only in experimental situations where long lifetimes did not have to be considered. An insulating material which can withstand immersion inside an operating reactor vessel for extended periods has not yet been identified. Hence, the methods remaining to be evaluated are listed in Table II.

Table II

1. Heated thermocouple
2. Differential Pressure
3. Ultrasonics
4. Capacitance
5. Microwave
6. Time-domain reflectometry

To evaluate those methods remaining a set of weighted criteria was established. These are listed in Table III.

Table III

1. Reliability	10
2. Ease of retrofit ?	10
3. In-situ verification or calibration	10
4. Probability of accident survival	9
5. Lifetime or long-term survival	8
6. Accuracy	5
7. Additional penetrations ?	5
8. Simplicity (vs complexity)	4
9. Versatility	4
10. Performance History	6
11. Cost	3

Each of these factors will be discussed briefly below.

1. Reliability. Reliability is really the overriding consideration and includes, in a general way, the remaining criteria. The highest reliability will be attained, not only through the traditional use of redundant detector systems, but by including more than one principle of measurement, which complement each other and can be related to other measured plant parameters. It is imperative that the level detectors be capable of in-situ verification.

2. Retrofit. The method must be adaptable to existing reactors. This requires a certain amount of flexibility in the design, since most installations will be site specific.

3. In-situ verification and calibration. As a minimum requirement the method should be capable of in-situ verification. The indications of at least one instrument which could have provided helpful information at TMI was disregarded because the operators considered the instrument unreliable. Under normal operating conditions, the reactor vessel will always be full, therefore, some means of verifying the level indication is needed so that confidence in the indication is maintained. A

system which can be calibrated in place as well is even more desirable.

4. Accident survival. The level detectors must have a high probability of surviving even a serious accident to provide the operators with a means for maintaining or regaining control of the plant.

5. Long-term survival. "Long-term" does not necessarily have to mean the lifetime of the reactor. As a minimum, this could be as short as the refueling cycle, typically eighteen months. This is a more realistic short term goal for the development of reactor vessel level detectors, until additional experience is accumulated.

6. Accuracy. Under normal operating conditions, only a confirmatory measurement of coolant level is required, essentially a "go no-go" indication. Under accident conditions, resulting in voiding at the top of the reactor vessel, the detector must be sufficiently accurate so that the coolant level is maintained above the top of the core.

7. Penetrations. Any method chosen should require a minimum of penetrations into the reactor vessel. In fact, a method would have to have some overwhelming advantage to warrant adding new penetrations to the reactor vessel. In older reactors, this might be impossible

8. Simplicity. Simple systems have fewer things to go wrong.

9. Versatility. Some types of sensors can sense more than one plant parameter. One type of ultrasonic probe, for instance, can provide an indication of temperature profile as well as liquid level.

10. Performance history. Methods employing well developed sensors, such as those based on thermocouples or differential pressure measurements have a history of performance, not only in reactor or nuclear use , but also in the chemical process industry in general. Short term developments should concentrate on using these methods.

11. Cost. Cost of the method must, of course, be considered. This will include not only the cost of the instrumentation, but, in addition, the cost of installation and qualification. These costs must be considered relative to the cost which might be incurred should the systems fail.

The above criteria were applied with their weighting factors given in Table III to each of the level measurement methods listed in Table II. Each method was rated on a scale of 1 to 10 for each of the criteria. The overall rating was obtained by multiplying each rating by the weight of the individual criterion. The results were summed and normalized again to a scale of 1 to 10. The results of this evaluation are shown in Figure 1.

III. Discussion of the Selected Methods

Having eliminated all but what seem to be the most promising methods for in-vessel liquid level measurements, it remains to present a somewhat more detailed discussion of the six remaining methods with somewhat more detail on the technical aspects.

1. Heated Thermocouple.

The above evaluation shows that the heated thermocouple appears to be the most promising method for liquid level measurement at least for the short term. Type K thermocouples have a significant history of successful use in the reactor environment. (For experimental measurements, that is. Thermocouples have not actually been qualified for use as control elements in commercial plants.) Naval reactors have used level sensors based on this

principle for over twenty years. Exact details of their application remains classified. Besides measuring level, if single junction heated sensors were used in an array, they could also be used to measure temperature profiles. Finally, the units can be made the same size as existing thermocouples in many reactors which would considerably simplify the installation by utilizing existing designs for penetrations, etc.

The principle of the heated junction thermocouple can be explained by reference to Figure 3. The ability of the surrrounding medium to conduct away the heat generated in the heater surrounding the measuring junction of the thermiocouple is different by about a factor of 30 depending on whether the medium is water or steam. This, of course, refers to static conditions. The effect of flowing media is more complicated.

Early experiments with a prototype sensor at room temperature in air and water showed that the heated thermocouple level sensor gave a clear indication of the presence of liquid or gas with only a modest heater current. In Figure 3, for example, a heat input of only two watts produced an eighteen degree C temperature rise when the sensor was immersed in water, but an eighty degree temperature rise when the sensor was raised into air.

There are several disadvantages to the heated thermocouple level sensor. Each sensor senses only one discrete level. To sense several levels requires a sensor for each and consequently an engineering judgement to locate the levels for which it is important for the operator to have information. Depending on the installation, the sensor may be affected by film condensation and run-off. Finally, transient behavior may be affected by neutron induced noise in the sensor cables.

Another method was tested which used ordinary thermocouples as sensors. In this method the thermocouple wires were heated using an AC current and at the same time the thermocouple emf read using a filtered circuit. A simple schematic of this system is shown in Figure 4. A blocking capacitor is placed in the output of the Variac to prevent the DC emf from the thermocouple from being shorted through the windings of the Variac. The thermocouple emf is filtered to remove the AC, buffered, and may be displayed on a meter. Figure 5 is a plot of the difference in indicated temperature between the covered and the uncovered state, vs the AC heating current. This method has both advantages and disadvantages. An ordinary thermocouple can be used as the sensor, possibly one already in place. It may require some prior knowledge of the temperature rise in the covered and uncovered state in the particular location where the thermocouple is installed. The method may have some use as a diagnostic tool and the instrumentation should be relatively inexpensive.

The Heated Thermocouple as Flowmeter.

One of the prototype heated junction thermocouple probes, ORNL II, was installed in a low flow calibration loop and the change in the output recorded as a function of flow rate. The results are shown in Figure 6. The minimium flow of 0.03 m/s (0.09 ft/s) Produced a change in temperature from the static, no flow condition of about 3 deg. C. At a higher flow velocity of about 0.8 m/s (2.6 ft/s), the change in temperature was about 13 deg. C. The normal convection flow rate in a shut-down reactor is expected to be about 0.3 m/s (1 ft/s).

Summary

Of the various methods considered, the heated thermocouple level probe seemed to be the most suitable, certainly for the short term since much of the manufacturing technology is well developed; installation designs and techniques would be similar to those used for in-vessel thermocouples now installed in PWR's could be used; and the sensor gives a direct indication of inadequate cooling. An experimental program is under way to obtain basic information about the behavior of heated junction thermocouple level sensors in pressurized, two-phase static and flowing systems. Part 2 of these reports summarizes the results of this program to date.

2. Differential Pressure.

Differential pressure, which uses the relationship between the hydrostatic head and liquid level, has been used for many years to monitor liquid level in tanks or vessels . The techniques are well known and differential

pressure instrumentation is readily available. In addition, a differential pressure system would be relatively easy to install, since it would require no redesign of the reactor internals. It provides a measurement of the liquid level over the entire height of the reactor vessel. It is a technique widely use for liquid level measurement in the pressurizer in many operating reactor systems. In a less optimistic vein, none of the triply redundent differential pressure liquid level systems installed on the TMI-2 pressurizer survived the accident. Another serious disadvantage of the differential pressure system is the requirement of additional piping and penetrations which have to be added to the primary coolant system. Further disadvantages included: the differential pressure due to the liquid level in the reactor vessel is small compared with the normal operational drop across the core† due to flow of the coolant; pressure transients which might accompany a loss of coolant accident could damage the transducers; there will be errors in the measured hydrostatic head due to temperature gradients in the connecting lines; and flashing could occur in the connecting lines between the reactor vessel and the transducers during a depressurization.

In summary, the differential pressure level measurement system has the advantages of simplicity, ease of installation and measurement of liquid level over the entire height of the reactor vessel. Against this must be weighed the relatively large errors which can occur because of flow across the core, potential damage which can occur to the measuring system during a loss of coolant or depressurization and the ambiguity in indication with voiding in the core region.

3. Ultrasonic.

Ultrasonic techniques have become increasingly popular as a means for measuring liquid and solid levels and flow. There are a variety of ultrasonic techniques which in a first analysis might be proposed for liquid level measurement in a reactor vessel. Damped reflections and damped multi-reflections involve sensing the change in impedence through the vessel wall when the is liquid present opposite the ultrasonic transducer. With the large impedence mismatch between the steel of the inner reactor vessel wall and a gas phase, a large fraction of the ultrasonic signal would be reflected. In the presence of water at the inner surface, however, a significant amount of the ultrasonic signal is transmitted into the liquid and a smaller fraction reflected back to the transducer. With the ultrasonic transducer mounted so that the signal is propagated normal to the vessel wall interface, the system is essentially a level switch, and only indicates the presence or absence of liquid at a single point. The transmission path can be angled with respect to the vessel wall interface and the reflection or damping of the reflections can be sensed over a range of levels. In actual reactor vessel construction, however, a stainless steel liner is fitted inside the steel pressure vessel, and the additional interface would introduce such strong reflections that it would be difficult to detect the reflections from the inner stainless steel wall exposed to the liquid.

Other commercially used ultrasonic level measurement techniques include liquid- and air-launched signals. Neither of these techniques was deemed suitable as they would sense refections from the internal structure of the reactor as well as the liquid-vapor interface.

A third catagory of ultrasonic level measurements employs waveguides. Waveguide techniques can use either extensional or torsional waves. The reflection caused by a change in impedence when the waveguide goes from a vapor to a liquid is small but detectable with extensional waves. The torsional wave level sensor infers the liquid level by a change in the delay time for reflection from the end or from inscribed zone markers. A description of encouraging experimental work at ORNL over the past year on the torsion wave ultrasonic sensor is included as the third part these reports.

---

† differential pressure due to level = 37 kPa (150 in H_2O)
differential pressure across the core due to flow = 413 kPa (1660 in H_2O, 60 PSI)

4. Capacitance.

Capacitance probes for level and interface detection have been fabricated for use in the Advanced Instrumention for Reflood Studies (AIRS) Program at ORNL and at INEL. Other types of capacitance level sensors are available commmercially and are used in the chemical process industry. A capacitance level sensor for in-vessel use would require further development, since insulators which can withstand prolonged exposure to the high temperature, high pressure water environment found inside a reactor do not exist. The electrical connections would require multiple penetrations into the reactor vessel. On the whole the disadvantages appear to outweight the advantages for the capacitance level detector.

5. Microwave Level Measurements.

Of the several microwave techniques available, the waveguide approach appears to be most adaptable to in-vessel use. There are at least two waveguide techniques which can be used: a resonant cavity waveguide and a time delay technique. In the resonant cavity, a standing wave is set up by sweeping the frequency in a waveguide open to the liquid level. The surface of the liquid in the waveguide changes the resonant frequency of the waveguide cavity and the level is proportional to the resonant frequency. In the time delay method, a microwave signal is reflected off the surface of the liquid in a waveguide open to the liquid system. The time delay introduced by the additional path length is determined by comparison with a reference signal derived from the input to the waveguide. The output is a beat frequency which can be mapped into the time domain by calculating the Fourier transform of the frequency signal. These types of measurements have been tested in laboratory experiments, but considerable design and testing is required before they can be made suitable for reactor vessel use. Both methods require a means for introducing the microwave signal into the reactor vessel. This may require a "window" which is transparent to microwave radiation, which has to be some kind of dielectric. It is not clear that a suitable window material can be found at this time. The methods require complex electronic signal processing equipment. The versatility offered by these methods, however, makes further development and testing attractive.

6. Time-domain Reflectometry.

Time-domain reflectometry is a well developed measurement method, although less so for liquid level measurement. A simple probe can be envisioned as a simple, long rod, possible shielded from contacting the internal components of the reactor by a perforated shroud. This system is essentially self-calibrating and self-verifying. By comparing the delay times of pulses reflected from the end of the sensor with the delays resulting from reflections caused by the change in impedence at the vapor-water interface, the liquid level is obtained. The probe can be activated by an electrical pulse, or magnetostrictively. In this respect it is similar to the extensional ultrasonic method. The electronic hardware is available off the shelf as oscilloscope plug-in modules. A serious disadvantage is that any contact along the length of the sensor will generate a reflection. At this time there appear to be several other methods with considerably more potential than time-domain reflectometry. The related torsional wave ultrasonic method described in part 3 of these reports has the advantage that it is relatively insensitive to light contact of the sensor with other objects.

7. Externally Mounted Radiation Detectors

Several methods for measuring reactor vessel liquid level have been proposed which use detectors mounted outside the reactor vessel. Some methods would indicate level by detecting the position of a floating ball containing a radiation source. Earlier we indicated that level detectors which required mechanical motion would not be acceptable due to the danger of the parts binding or getting loose inside the reactor. Another method has been proposed which utilizes the interaction of the neutrons from the core with D_2O to produce gamma rays. The level of water above the core is inferred from the counting rate. Tests of this method have shown that it is relatively insensitive for liquid levels more than about 50 cm above the core. This may be inadequte warning to the operator that the core is in danger of being uncovered. A serious disadvantage is that the detectors which would be employed by this technique have not enjoyed a very favorable history of reliabiity.

Scoring of Level Detection Methods

Multiplying Factor	10	10	10	9	8	5	5	4	4	6	3	Rating (10 max)
	Reliability	Retrofit ?	In-situ verification/calibration	Survival (accident)	Survival (long-term)	Accuracy	Penetrations	Simplicity	Versatility	Performance history	Cost	
Methods												
1. Heated thermocouple	10	10	10	7	10	8	5	8	9	9	9	8.9
2. Diff. pressure	7	10	6	6	7	6	6	9	2	8	8	6.9
3. Ultrasonic	5	8	8	7	7	8	7	7	7	4	7	6.8
4. TDR	5	10	10	5	8	8	7	6	5	2	3	6.7
5. Capacitance	2	8	6	5	8	9	5	7	2	2	6	5.5
6. Microwave	2	6	8	7	8	5	7	3	2	1	2	5.1

Figure 1

THE HEATED THERMOCOUPLE LEVEL DETECTOR SENSES THE DIFFERENCE IN HEAT TRANSFER PROPERTIES OF THE LIQUID & VAPOR PHASES.

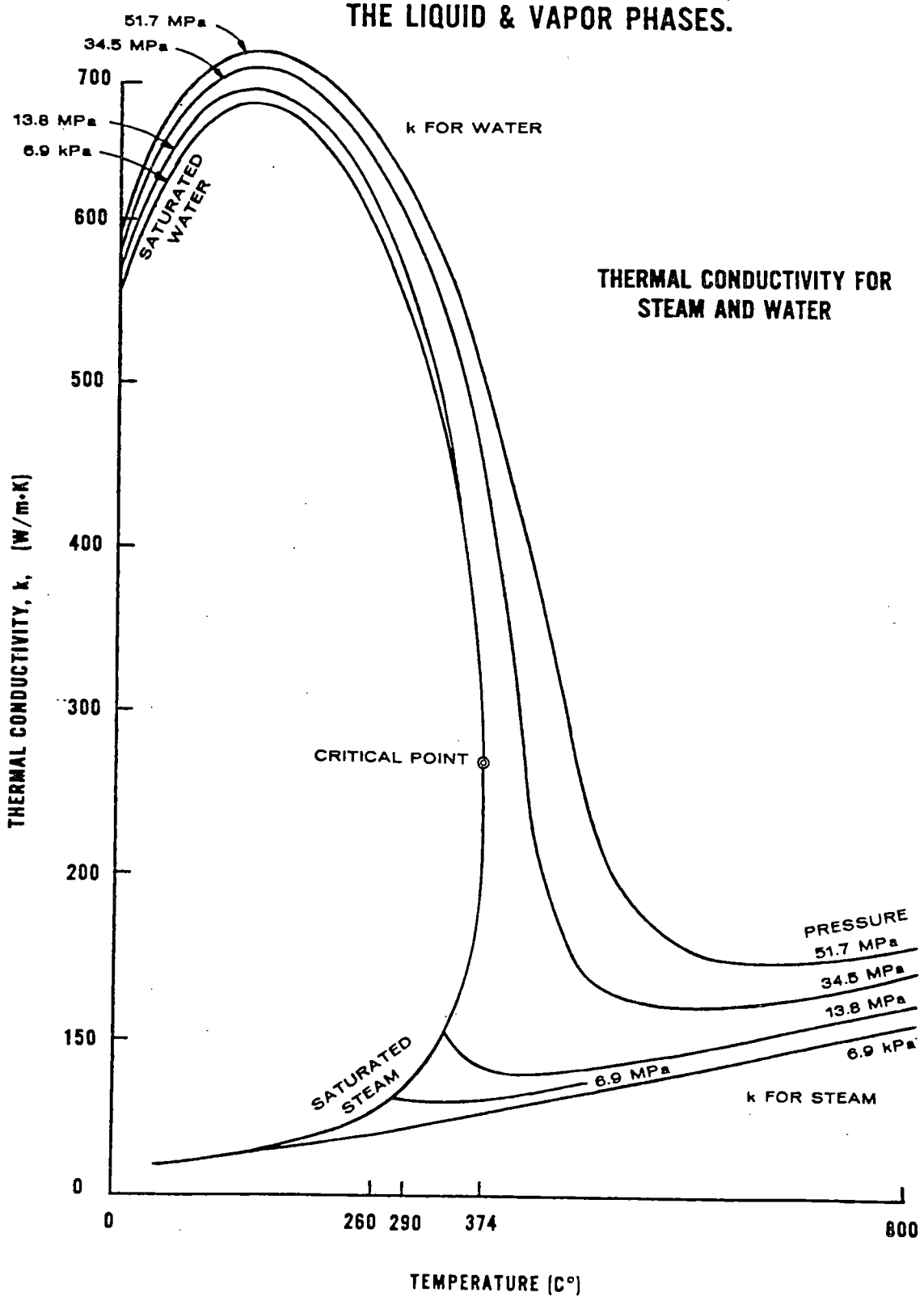

Figure 2

WITH 3.2 MM DIAMETER EXPERIMENTAL HEATED THERMOCOUPLE ASSEMBLY, WE OBTAINED ADEQUATE SENSITIVITY WITH A MODEST HEAT INPUT.

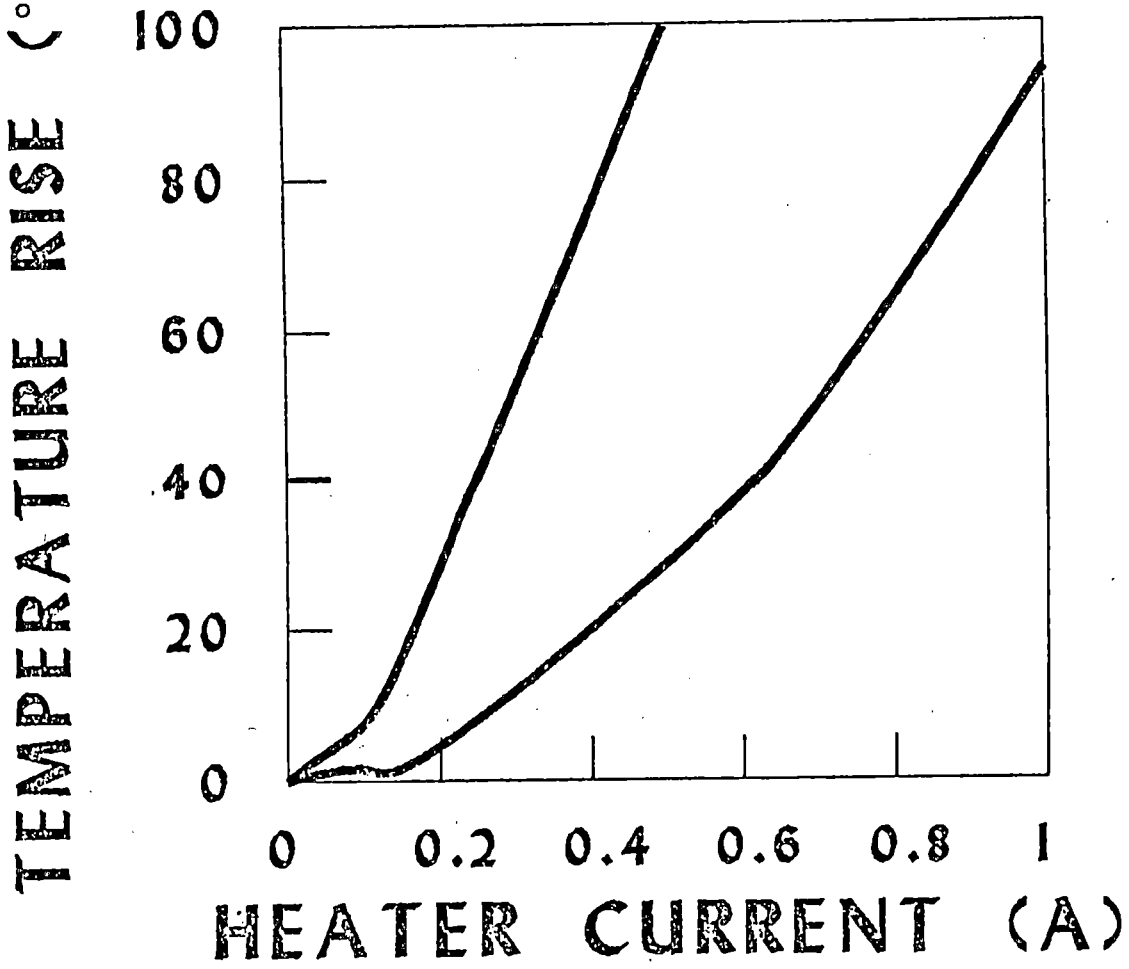

Figure 3

USING AC HEATING CURRENT THERMOCOUPLE OUTPUT CAN STILL INDICATE TEMPERATURE

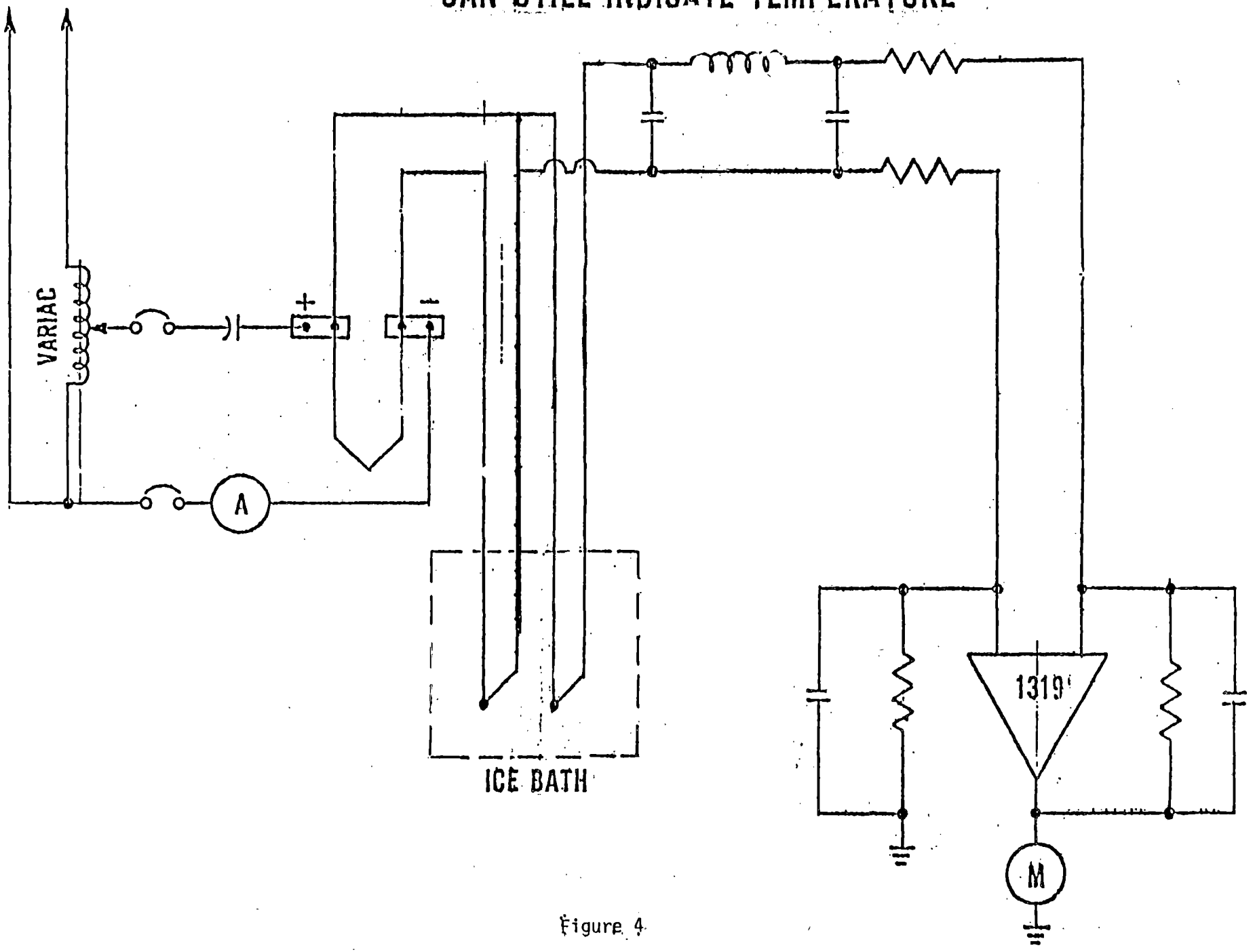

Figure 4

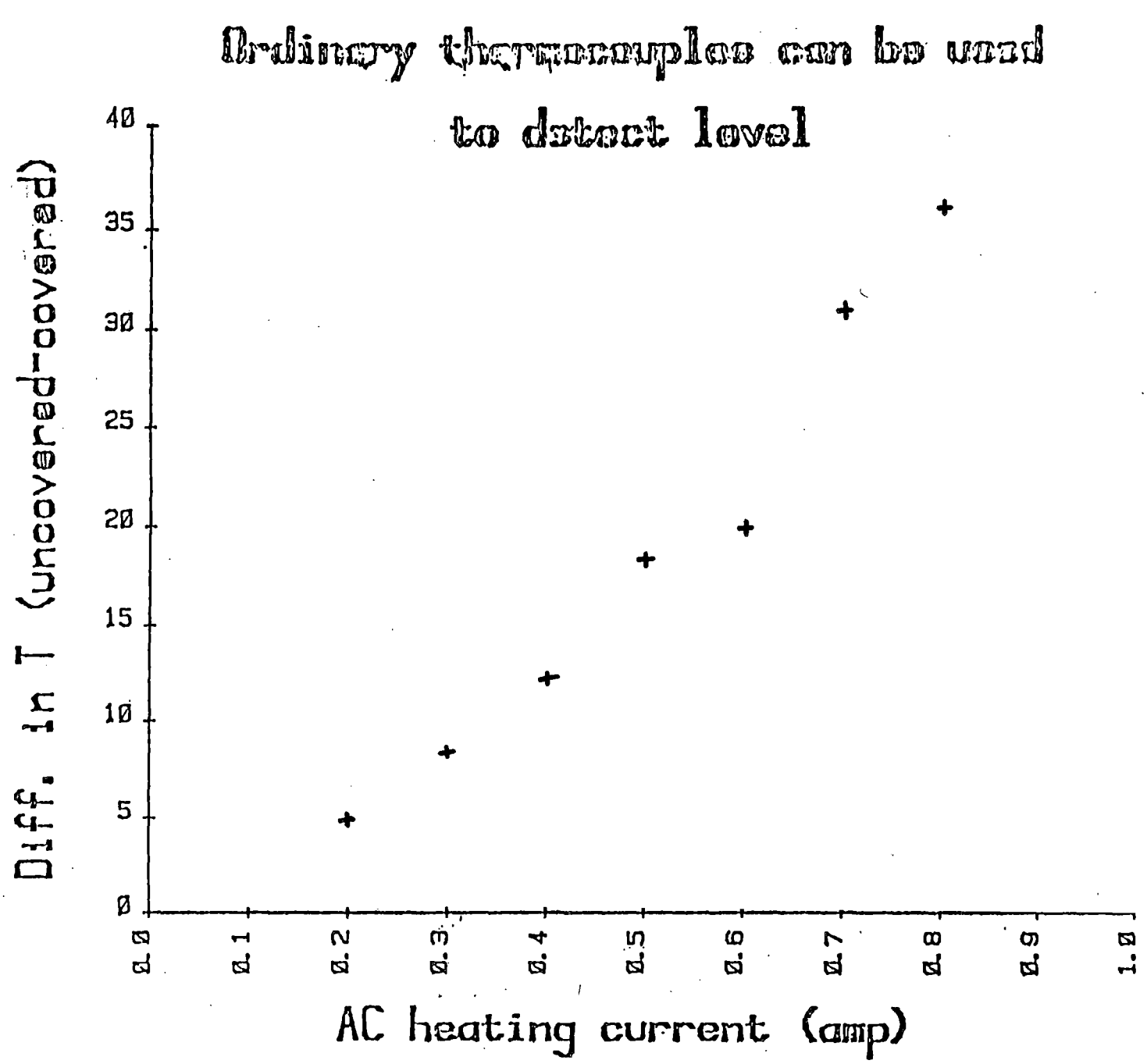
Ordinary thermocouples can be used to detect level
Diff. in T (uncovered-covered)
40
35
30
25
20
15
10
5
0
0.0
0.1
0.2
0.3
0.4
0.5
0.6
0.7
0.8
0.9
1.0
AC heating current (amp)

Figure 5

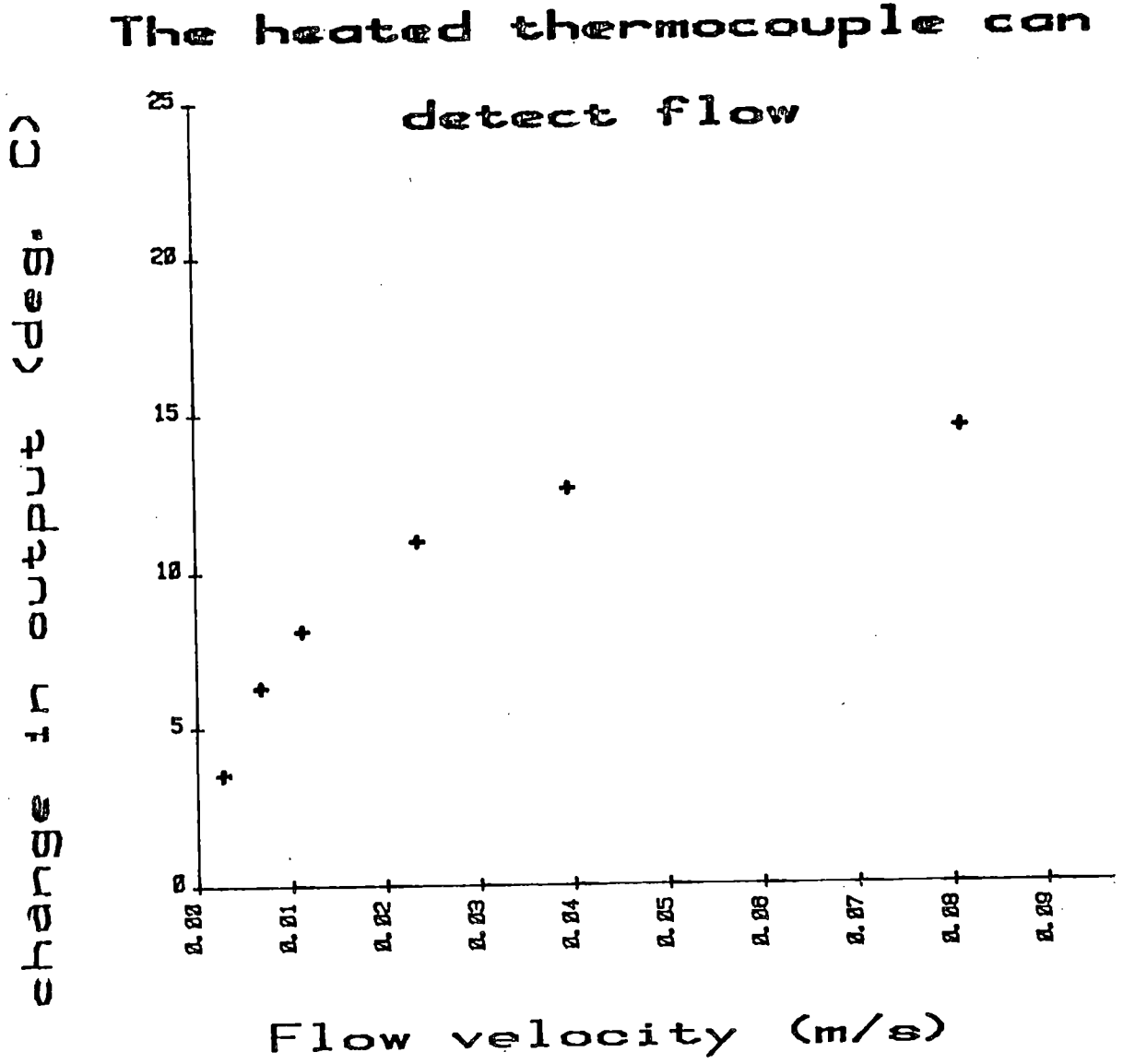
The heated thermocouple can detect flow
change in output (deg. C)
25
20
15
10
5
0
0.00
0.01
0.02
0.03
0.04
0.05
0.06
0.07
0.08
0.09
Flow velocity (m/s)

Figure 6

NRC FORM 335 (7-77) U.S. NUCLEAR REGULATORY COMMISSION

BIBLIOGRAPHIC DATA SHEET

1. REPORT NUMBER *(Assigned by DDC)*: NUREG/CP-0016

4. TITLE AND SUBTITLE *(Add Volume No., if appropriate)*: Proceedings of the U.S. Nuclear Regulatory Commission Meeting on Reactor Vessel Liquid Level Measurement

2. *(Leave blank)*

3. RECIPIENT'S ACCESSION NO.

7. AUTHOR(S): N.N. Kondic, Editor

5. DATE REPORT COMPLETED: MONTH December, YEAR 1980

9. PERFORMING ORGANIZATION NAME AND MAILING ADDRESS *(Include Zip Code)*:
Division of Reactor Safety Research
Office of Nuclear Regulatory Research
U.S. Nuclear Regulatory Commission
Washington, DC 20555

DATE REPORT ISSUED: MONTH January, YEAR 1981

6. *(Leave blank)*

8. *(Leave blank)*

12. SPONSORING ORGANIZATION NAME AND MAILING ADDRESS *(Include Zip Code)*:
Same as 9, above.

10. PROJECT/TASK/WORK UNIT NO.

11. CONTRACT NO.

13. TYPE OF REPORT

PERIOD COVERED *(Inclusive dates)*

15. SUPPLEMENTARY NOTES

14. *(Leave blank)*

16. ABSTRACT *(200 words or less)*

The Three Mile Island accident focused attention on the importance of monitoring liquid inventory within the reactor vessel of nuclear power plants. Subsequently, the NRC issued a requirement that all commercial plants be equipped with some means of measuring this parameter by January 1982.

By NRC invitation, representatives of national laboratories, universities and industry met to discuss various techniques of liquid level and liquid inventory measurement which might be amenable to the operating conditions of PWR plants. The proceedings of this meeting, contained in this report, represent a state-of-the-art review of this subject. This review now serves as a framework for detailed feasibility studies and proof tests of techniques for measuring reactor vessel liquid inventory.

17. KEY WORDS AND DOCUMENT ANALYSIS

17a. DESCRIPTORS

17b. IDENTIFIERS/OPEN-ENDED TERMS

18. AVAILABILITY STATEMENT: Unlimited

19. SECURITY CLASS *(This report)*: Unclassified

21. NO. OF PAGES

20. SECURITY CLASS *(This page)*: Unclassified

22. PRICE: $

NRC FORM 335 (7-77)

UNITED STATES
NUCLEAR REGULATORY COMMISSION
WASHINGTON, D. C. 20555

OFFICIAL BUSINESS
PENALTY FOR PRIVATE USE, $300

POSTAGE AND FEES PAID
U.S. NUCLEAR REGULATORY
COMMISSION

Name Mail Stop Due Date

Return to: 823 LIBRARY/SNL, MS 0731

4443

Dr. Peter Strom
Sandia Laboratoreis
P.O. Box 5800
Albuquerque, New Mexico 87115