FINAL ASP Program Analysis-Precursor

Accident Sequence Precursor Program – Office of Nuclear Regulatory Research			
Waterford Steam Electric Station, Unit 3	Manual Reactor Trip due to Low Steam Generator Levels, Emergency Feedwater System Flow Oscillations, and Failure of Train B Fast Bus Transfer		
Event Date: 6/3/2015	**LERs:** 382-2015-004 and 382-2015-005 **IRs:** 50-382/2015-003 and 50-382/2016-001		**CCDP= 4×10^{-6}**
Plant Type: Combustion Engineering 2-Loop PWR with Large Dry Containment			
Plant Operating Mode (Reactor Power Level): Mode 1 (100% Reactor Power)			
Analyst: Ian Gifford	**Reviewer:** David Aird	**Contributors:** N/A	**BC Approved Date:** **10/04/2016**

EXECUTIVE SUMMARY

On June 3, 2015, at 5:02 p.m. with the reactor operating at 100% power, control room annunciators indicated low suction pressure on all three heater drain pumps and both Main Feedwater (MFW) pumps. “A” MFW pump subsequently tripped on low suction pressure and the reactor was manually tripped as both Steam Generator (SG) levels dropped to 50% narrow range level. All control rods fully inserted. Following the reactor trip, the “B” train electrical buses failed to transfer to the Startup Transformer (SUT) from the Unit Auxiliary Transformer (UAT). “B” Emergency Diesel Generator (EDG) (EDG-B) started and loaded the 3B safety buses. As a result of losing the “B” non-safety bus, two out of three circulating water pumps were lost and led to a loss of main condenser vacuum. At 5:07 p.m., the Emergency Feedwater System (EFW) supplied flow to SG 1 and SG 2 and levels began to recover. However, wide and frequent EFW flow fluctuations were observed, which are atypical of normal system operation. To prevent the flow oscillations while continuing to regulate EFW flow, the Backup Flow Control Valves (BFCVs) were switched from automatic mode to manual.

According to the risk analysis modeling assumptions used in this Accident Sequence Precursor (ASP) analysis, the most likely core damage scenario is a loss of condenser heat sink with a failure of safety relief valves to reseat, failure of shutdown cooling, and subsequent failure of high pressure recirculation (HPR). Because HPR is dependent on the 3B safety bus, operator non-recovery of the fast bus transfer and failure of EDG-B represent significant contributors to the overall risk evaluation.

The Reactor Oversight Process identified two Green findings (i.e., very low safety significance) associated with complications that occurred during this event. The failure of the fast transfer was not determined to be a performance deficiency, and therefore did not result in a finding. In contrast to the Significance Determination Process (SDP), which evaluates each inspection finding individually, the ASP Program considers the occurrence of an initiating event, along with any failures, degraded conditions, or unavailabilities that were associated with the event response. Additional information on the similarities/differences between the ASP analysis modeling assumptions and the SDP evaluations are provided in this report.

EVENT DETAILS

Event Description. On June 3, 2015, at 5:00 p.m. with the reactor operating at 100% power, the control room received multiple alarms indicating high levels in Feed Heater Drain (FHD) 2C. Extraction Steam to the #2 heater isolated due to the high high level in FHD 2C. FHD 1C alternate drain level control valve (LCV) opened to divert drainage to the condenser. The Off-Normal Procedure for Secondary System Transient was entered. At 5:02 p.m., control room annunciators indicated low suction pressure on all three heater drain pumps and both MFW pumps. The Control Room Supervisor (CRS) directed the Balance of Plant (BOP) Operator to reduce power by 100 MW at a rate of 40 MW/min. At 5:04 p.m., the three heater drain pumps tripped on low suction pressure, followed by a trip of the "A" MFW pump. The Off-Normal Procedure for a Rapid Plant Power Reduction was entered. At 5:05 p.m., the BOP Operator reported that SG 1 and SG 2 were at 50% narrow range level and rapidly dropping. In anticipation of an automatic trip at the 27.4% narrow range level from the Reactor Protection System, the CRS directed a manual reactor trip. All control rods fully inserted, all required safety systems actuated as designed, and the Emergency Operating Procedure (EOP) for Standard Post Trip Actions was entered.

At 5:07 p.m., an Emergency Feedwater Actuation Signal (EFAS) initiated the EFW and 250 gallons of water per minute (gpm) was supplied to SG 1 and SG 2 through Primary Flow Control Valves (PFCVs) EFW224A and EFW224B, respectively. BFCVs EFW223A and EFW223B initially remained closed. As SG levels continued to decrease, the EFW control logic automatically opened the BFCVs and SG levels began to recover. At 5:09 p.m., EFW Steam Driven Pump A/B reached rated speed and EFW header pressure increased. Shortly after this, wide and frequent EFW flow fluctuations were observed, which are atypical of normal system operation. Operations personnel noticed the flow controller outputs were oscillating frequently. At the time, the PFCVs were holding the correct fixed position in automatic mode. To prevent the flow oscillations, the BFCVs were switched from automatic to manual mode and closed at 5:15 p.m. Flow oscillations stopped when the BFCVs were switched into manual mode. After verifying operation of the BFCVs in manual mode, the PFCVs were closed and the BFCVs were used in manual mode to regulate EFW flow. A diagram of the Waterford EFW System is provided in Appendix C, Figure C-1.

Following the manual reactor trip at 5:05 p.m., the "B" train electrical buses failed to transfer to the SUT from the UAT, and were de-energized. In response to the loss of "B" train electrical buses, EDG-B started at 5:05 p.m. and loaded the 3B safety buses. "A" train electrical buses successfully transferred to the SUT. A diagram of the Waterford Plant Electrical Distribution System is provided in Appendix C, Figure C-2.

As a result of losing the "B" non-safety bus, two out of three circulating water pumps were lost and led to a loss of main condenser vacuum. The fourth circulating water pump was out of service for maintenance at the time. At 5:06 p.m., the non-safety buses were manually transferred to the "B" SUT, but the loads remained de-energized until 6:17 p.m. The 3B safety buses were transferred to the SUT at 6:20 p.m. and EDG-B was secured at 6:24 p.m.

At 9:43 p.m., the Auxiliary Feedwater pump began feeding both SGs and EFW was secured at 10:31 p.m. On June 4, 2015, at 2:24 a.m., the EFAS system was reset and EFW was placed in standby. At 5:27 a.m., the EOP for Loss of Main Feedwater was exited and the Normal Operating Procedure for Plant Shutdown was entered. The plant was stabilized in Mode 3 at normal operating temperature and pressure, with heat removal controlled by Atmospheric Dump Valves (ADVs).

Additional information is provided in Licensee Event Report (LER) 382-2015-004 (Ref. 1), LER 382-2015-005 (Ref. 2), Inspection Report (IR) 50-382/2015-003 (Ref. 3), and IR 50-382/2016-001 (Ref. 4).

Causes. High water level in FHD 2C resulted from the 2C normal LCV stem and plug assembly disengaging from the actuator stem. The stem threads were damaged and the lock pin was sheared, resulting in the normal LCV failing in the closed position. The alternate LCV was out for maintenance at that time.

Failure of the "B" UAT to transfer to the "B" SUT was due to a failure in the "B" SUT time delay relay (Allen Bradley 700RTC) during the fast bus transfer.

Fluctuations in EFW flow were caused by instability in the control system of the EFW BFCVs when operating in flow control mode. Improper system gain settings resulted in incorrect output signals to the BFCVs.

Additional Event Information.

- Reactor Power Cutback was removed from service due to time in core life.
- FHD 2C alternate LCV was removed for maintenance.
- Circulating Water Pump A was removed for maintenance.

MODELING

Analysis Type. An initiating event analysis was performed using the Waterford Standardized Plant Analysis Risk (SPAR) model Revision 8.16, created in May 2014.

SDP Results/Basis for ASP Analysis. The ASP Program uses SDP results for degraded conditions when available and applicable. The ASP Program performs independent analyses for initiating events. ASP analyses of initiating events account for all failures/degraded conditions and unavailabilities (e.g., equipment out for test/maintenance) that occurred during the event, regardless of licensee performance.[1]

An inspection revealed two Green findings (i.e., very low safety significance) related to this event. The first Green finding occurred because the licensee did not follow procedural guidance when changing materials used for FHD LCVs. The risk evaluation addressed a general transient combined with the failure of both MFW pumps and yielded an incremental conditional core damage probability (ICCDP) of 4×10^{-7}/year. Further details of this finding are found in IR 50-382/2015-003 (Ref. 3). The second Green finding occurred because the licensee failed to verify the adequacy of the EFW system design. The risk evaluation addressed the failure of EFW flow control valves (FCVs) to provide automatic feedwater flow to the SGs, combined with the operator failing to take manual control. The condition assessment was analyzed for a one year exposure period and yielded a change to the core damage frequency (ΔCDF) of 5.3×10^{-10}/year. Further details of this finding are found in IR 50-382/2015-003 (Ref. 3). There were no findings related to the failure of the fast bus transfer. LER 382-2015-004 was closed in IR 50-382/2015-003 (Ref. 3) and LER 382-2015-005 was closed in IR 50-382/2016-001 (Ref. 4).

[1] ASP analyses also account for any degraded condition(s) that were identified after the initiating event occurred if the failure/degradation exposure period(s) overlapped the initiating event date.

An independent ASP analysis was performed for this event to analyze the risk significance of the reactor trip in conjunction with the feedwater and electrical power distribution malfunctions.

Key Modeling Assumptions. The following modeling assumptions were significant to the modeling of this event:

- This analysis models the June 3, 2015 reactor trip at Waterford Steam Electric Station as a loss of condenser heat sink initiating event. With one circulating water pump out for maintenance and two of the remaining three pumps lost due to the failure of the fast bus transfer, there was a loss of main condenser vacuum.
  - The probability of IE-LOCHS (*Initiating Event - Loss of Condenser Heat Sink*) was set to 1.0; all other initiating event probabilities were set to zero.
- Following the reactor manual trip, "B" train electrical buses failed to transfer to the SUT from the UAT, and were de-energized. To account for this, basic event ACP-ABT-FC-TRB (*Failure of Fast Bus Transfer for Train B*) was set to TRUE.
- Basic event ACP-XHE-XL-MANTRIP (*Operator Fails To Transfer Loads To SUT Given ABT Fails*) was left at the nominal probability of 2.00×10^{-2}.

The flow oscillations observed in the EFW system were not included in this initiating event analysis based on the assumption that EFW would have fulfilled its function of replenishing SG levels despite the erratic FCV behavior. As stated in LER 382-2015-004 (Ref. 1), the EFW flow oscillations between 400-800 gpm would have continued to fill the SGs until the SG wide range had recovered to 81%. At that point, the BFCVs would have automatically switch to level control mode and terminated the flow control mode oscillations. Another consideration for making this assumption is that the operators are trained to observe SG level control after a reactor trip, per OP-902-00 "Standard Post Trip Actions" (Ref. 5), and switch to manual flow control mode as needed. Further guidance for switching the EFW from automatic to manual control is provided in OP-901-201 "Steam Generator Level Control Malfunction" (Ref. 6).

There was no loss of instrument air (LOIA) concurrent with this event. However, there is extensive discussion in the LER and IRs of its potential importance to a postulated event. Specifically, the EFW FCVs utilize instrument air to drive valve position. In the event of a LOIA, backup nitrogen accumulator tanks provide a source of air to position the FCVs and ADVs, and are sized for a 10 hour mission time. Analysis performed by the licensee indicates that the excessive cycling of the EFW FCVs could have depleted the nitrogen accumulator tanks prior to their 10 hour mission time. Because there was no LOIA during this event and the FCVs are designed to fail in their open position, this postulated failure was not included in this analysis. Additionally, operators are able to take manual control of the FCVs and ADVs as necessary to prevent depletion of the tanks.

ANALYSIS RESULTS

CCDP. The point estimate conditional core damage probability (CCDP) for this event is 4.0×10^{-6}. The ASP Program acceptance threshold is a CCDP of 1×10^{-6} or the CCDP equivalent of an uncomplicated reactor trip with a non-recoverable loss of feedwater or condenser heat sink, whichever is greater. This CCDP equivalent for Waterford is 1.2×10^{-6}. Therefore, this event is a precursor.

Dominant Sequence. The dominant sequence is LOCHS Sequence 06 (CCDP = 3.1×10^{-6}), which contributes approximately 76% of the total internal events CCDP. The sequences/cut sets that contribute at least 1% of the total internal events CCDP are provided in Appendix A.

The dominant sequence is shown graphically in Appendix B, Figure B-1. The events and important component failures in LOCHS Sequence 06 are:

- A loss of condenser heat sink occurs,
- Reactor scram succeeds,
- Feedwater system succeeds,
- Safety relief valves fail to reseat,
- High pressure injection succeeds,
- Reactor coolant system cooldown using ADVs succeeds,
- Shutdown cooling fails[2], and
- High pressure recirculation fails.

[2] The Shutdown Cooling (SDC) house event is set to TRUE when IE-LOCHS is established as the initiating event (FLAG-LOPCS) in the Waterford SPAR model. In discussion with the Idaho National Laboratory SPAR model analysts, it was determined that failure of SDC for LOCHS events is based on information provided by the licensee. The SPAR model provides no credit for SDC during LOCHS because the licensee does not credit the system in their risk modeling.

REFERENCES

1. Waterford Steam Electric Station, “LER 382-2015-004-02 – Inoperability of the Emergency Feedwater Actuation System, Emergency Feedwater (EFW) System, and Atmospheric Dump Valves due to Improper Configuration of the EFW System Flow Control System,” dated April 28, 2016 (ML16119A438).

2. Waterford Steam Electric Station, “LER 382-2015-005-01 – Manual Reactor Trip due to Low Steam Generator Levels,” dated August 21, 2015 (ML15233A088).

3. U.S. Nuclear Regulatory Commission, “Waterford Steam Electric Station, Unit 3 – NRC Integrated Inspection Report 05000382/2015-003,” dated November 12, 2015 (ML15316A476).

4. U.S. Nuclear Regulatory Commission, “Waterford Steam Electric Station, Unit 3 – NRC Integrated Inspection Report 05000382/2016-001,” dated April 25, 2016 (ML16116A210).

5. Waterford Steam Electric Station, “Emergency Operating Procedure OP-902-000 Standard Post Trip Actions,” dated May 3, 2005.

6. Waterford Steam Electric Station, “Off Normal Procedure OP-901-201 Steam Generator Level Control Malfunction,” dated May 20, 2005.

Appendix A: Analysis Results

Summary of Conditional Event Changes

Event	Description	Conditional Value	Nominal Value
ACP-ABT-FC-TRB	FAILURE OF FAST BUS TRANSFER FOR TRAIN B	True	1.60E-3
IE-LOCHS	LOSS OF CONDENSER HEAT SINK	1.00E+0[a]	5.86E-2

a. All other initiating event probabilities set to zero.

Dominant Sequence Results

Event Tree	Sequence	CCDP	% Contribution	Description
LOCHS	06	3.06E-6	76.1%	/RPS, /FW, SRV-RES, /HPI, /SSC, SDC, HPR
LOCHS	12	8.60E-7	21.4%	/RPS, FW, /SRV-RES, COND
Total		**4.02E-6**	**100.0%**	

Referenced Fault Trees

Fault Tree	Description
COND	SEC COOLING USING CONDENSATE SYSTEM
FW	FEEDWATER SYSTEM (MFW & EFW)
HPR	HIGH PRESSURE RECIRCULATION
SDC	SHUTDOWN COOLING
SRV-RES	SAFETY RELIEF VALVES RESEAT

Cut Set Report - LOCHS 06

Only items contributing at least 1% to the total are displayed.

#	CCDP	Total%	Cut Set
	3.06E-6	100	Displaying 562 Cut Sets. (562 Original)
1	5.81E-7	19.02	IE-LOCHS,ACP-XHE-XL-MANTRIP,EPS-DGN-FR-DG3B,PPR-SRV-OO-317A
2	5.81E-7	19.02	IE-LOCHS,ACP-XHE-XL-MANTRIP,EPS-DGN-FR-DG3B,PPR-SRV-OO-317B
3	2.77E-7	9.07	IE-LOCHS,ACP-XHE-XL-MANTRIP,EPS-DGN-TM-DG3B,PPR-SRV-OO-317A
4	2.77E-7	9.07	IE-LOCHS,ACP-XHE-XL-MANTRIP,EPS-DGN-TM-DG3B,PPR-SRV-OO-317B
5	9.66E-8	3.16	IE-LOCHS,HPI-XHE-XM-MFLW,PPR-SRV-OO-317A
6	9.66E-8	3.16	IE-LOCHS,HPI-XHE-XM-MFLW,PPR-SRV-OO-317B
7	6.08E-8	1.99	IE-LOCHS,HPI-AOV-CF-RWSP,PPR-SRV-OO-317B
8	6.08E-8	1.99	IE-LOCHS,HPI-AOV-CF-RWSP,PPR-SRV-OO-317A
9	5.59E-8	1.83	IE-LOCHS,ACP-XHE-XL-MANTRIP,EPS-DGN-FS-DG3B,PPR-SRV-OO-317A
10	5.59E-8	1.83	IE-LOCHS,ACP-XHE-XL-MANTRIP,EPS-DGN-FS-DG3B,PPR-SRV-OO-317B
11	3.86E-8	1.26	IE-LOCHS,ACP-XHE-XL-MANTRIP,EPS-FAN-TM-3BSB,PPR-SRV-OO-317A
12	3.86E-8	1.26	IE-LOCHS,ACP-XHE-XL-MANTRIP,EPS-FAN-TM-3BSB,PPR-SRV-OO-317B
13	3.22E-8	1.05	IE-LOCHS,ACP-BAC-LP-3A31,PPR-SRV-OO-317A
14	3.22E-8	1.05	IE-LOCHS,ACP-BAC-LP-3A31,PPR-SRV-OO-317B
15	3.22E-8	1.05	IE-LOCHS,ACP-BAC-LP-3B31,PPR-SRV-OO-317A
16	3.22E-8	1.05	IE-LOCHS,ACP-BAC-LP-3A3,PPR-SRV-OO-317A
17	3.22E-8	1.05	IE-LOCHS,ACP-BAC-LP-3B31,PPR-SRV-OO-317B
18	3.22E-8	1.05	IE-LOCHS,ACP-BAC-LP-3A3,PPR-SRV-OO-317B
19	3.22E-8	1.05	IE-LOCHS,ACP-BAC-LP-3B3,PPR-SRV-OO-317B
20	3.22E-8	1.05	IE-LOCHS,ACP-BAC-LP-3B3,PPR-SRV-OO-317A

Cut Set Report - LOCHS 12

Only items contributing at least 1% to the total are displayed.

#	CCDP	Total%	Cut Set
	8.60E-7	100	Displaying 1137 Cut Sets. (1137 Original)
1	9.45E-8	10.99	IE-LOCHS,ACP-XHE-XL-MANTRIP,EFW-MDP-TM-A,EFW-TDP-FR-AB,EPS-DGN-FR-DG3B
2	6.08E-8	7.07	IE-LOCHS,ACP-XHE-XL-MANTRIP,EFW-AOV-CF-2289AB
3	6.08E-8	7.07	IE-LOCHS,ACP-XHE-XL-MANTRIP,EFW-AOV-CF-2234AB
4	4.95E-8	5.75	IE-LOCHS,ACP-XHE-XL-MANTRIP,EFW-MDP-CF-START,EFW-TDP-FR-AB
5	4.34E-8	5.05	IE-LOCHS,CWS-CHL-CF-RUN,EFW-TDP-FR-AB,EHV-XHE-XM-ALTCL
6	3.04E-8	3.54	IE-LOCHS,AFW-XHE-XM-PMP,EFW-AOV-CF-2289AB
7	3.04E-8	3.54	IE-LOCHS,AFW-XHE-XM-PMP,EFW-AOV-CF-2234AB
8	2.47E-8	2.88	IE-LOCHS,AFW-XHE-XM-PMP,EFW-MDP-CF-START,EFW-TDP-FR-AB
9	2.38E-8	2.76	IE-LOCHS,ACP-XHE-XL-MANTRIP,EFW-TDP-FR-AB,EFW-XHE-XR-MDPA,EPS-DGN-FR-DG3B
10	2.25E-8	2.62	IE-LOCHS,ACP-XHE-XL-MANTRIP,EFW-MDP-FS-A,EFW-TDP-FR-AB,EPS-DGN-FR-DG3B
11	2.00E-8	2.33	IE-LOCHS,ACP-XHE-XL-MANTRIP,EFW-XHE-XM-ACCWMU,EFW-XHE-XM-CSPMKUP
12	1.93E-8	2.24	IE-LOCHS,ACP-XHE-XL-MANTRIP,AFW-MOV-CC-CSTCSP,EFW-XHE-XM-ACCWMU
13	1.55E-8	1.81	IE-LOCHS,ACP-XHE-XL-MANTRIP,EFW-MDP-TM-A,EFW-TDP-FS-AB,EPS-DGN-FR-DG3B
14	1.13E-8	1.32	IE-LOCHS,ACP-XHE-XL-MANTRIP,EFW-TDP-FR-AB,EFW-XHE-XR-MDPA,EPS-DGN-TM-DG3B
15	1.07E-8	1.25	IE-LOCHS,ACP-XHE-XL-MANTRIP,EFW-MDP-FS-A,EFW-TDP-FR-AB,EPS-DGN-TM-DG3B
16	1.07E-8	1.24	IE-LOCHS,ACP-XHE-XL-MANTRIP,EFW-PMP-CF-START
17	1.00E-8	1.16	IE-LOCHS,AFW-XHE-XM-PMP,EFW-XHE-XM-ACCWMU,EFW-XHE-XM-CSPMKUP
18	9.63E-9	1.12	IE-LOCHS,AFW-MOV-CC-CSTCSP,AFW-XHE-XM-PMP,EFW-XHE-XM-ACCWMU
19	9.08E-9	1.06	IE-LOCHS,ACP-XHE-XL-MANTRIP,EFW-MDP-TM-A,EFW-TDP-FR-AB,EPS-DGN-FS-DG3B
20	8.74E-9	1.02	IE-LOCHS,ACP-XHE-XL-MANTRIP,EFW-TNK-FC-CSP
21	8.61E-9	1.00	IE-LOCHS,ACP-XHE-XL-MANTRIP,EFW-MDP-FR-A,EFW-TDP-FR-AB,EPS-DGN-FR-DG3B

Referenced Events

Event	Description	Probability
ACP-BAC-LP-3A3	DIVISION 3A3-S AC POWER 4160V BUS 3A3-S FAILS	3.33E-5
ACP-BAC-LP-3A31	FAILURE OF 480V BUS 3A31-S	3.33E-5
ACP-BAC-LP-3B3	DIVISION 3B3-S AC POWER 4160V BUS 3B3-S FAILS	3.33E-5
ACP-BAC-LP-3B31	FAILURE OF 480V BUS 3B31-S	3.33E-5
ACP-XHE-XL-MANTRIP	OPERATOR FAILS TO TRANSFER LOADS TO SUT GIVEN ABT FAILS	2.00E-2

AFW-MOV-CC-CSTCSP	CONDENSATE STORAGE TANK CROSS-CONNECT MOV TO CSP FAILS TO OPEN	9.63E-4
AFW-XHE-XM-PMP	FAILURE OFOPERATOR TO ALIGN AFW	1.00E-2
CWS-CHL-CF-RUN	COMMON CAUSE FAILURE OF CWS CHILLERS TO RUN	1.10E-5
EFW-AOV-CF-2234AB	CCF OF EFW SG FCVs 223A/B&224A/B TO OPEN	3.04E-6
EFW-AOV-CF-2289AB	CCF OF EFW SG FIVs 228A/B&229A/B TO OPEN	3.04E-6
EFW-MDP-CF-START	CCF OF EFW MDPs A & B TO START	6.26E-5
EFW-MDP-FR-A	EFW MDP A FAILS TO RUN	3.62E-4
EFW-MDP-FS-A	EFW MDP A FAILS TO START	9.47E-4
EFW-MDP-TM-A	EFW MDPA UNAVAILABLE DUE TO TEST AND MAINTENANCE	3.98E-3
EFW-PMP-CF-START	CCF OF EFW PUMPS TO START (PSA BASIC EVENT)	5.33E-7
EFW-TDP-FR-AB	EFW TDPA/B FAILS TO RUN	3.95E-2
EFW-TDP-FS-AB	EFW TDP A/B FAILS TO START	6.49E-3
EFW-TNK-FC-CSP	EFW CONDENSATE STORAGE POOL FAILURES	4.37E-7
EFW-XHE-XM-ACCWMU	OPERATOR FAILS TO ALIGN BACKUP WATER SOURCE ACCW	1.00E-3
EFW-XHE-XM-CSPMKUP	OPERATOR FAILS TO ALIGN BACKUP WATER SOURCE TO CSP	1.00E-3
EFW-XHE-XR-MDPA	OPERATOR FAILS TO RESTORE EFW MDPA AFTER T&M	1.00E-3
EHV-XHE-XM-ALTCL	OPERATOR FAILS TO ALIGN ALT COOLING METHOD	1.00E-1
EPS-DGN-FR-DG3B	DIESEL GENERATOR 3B-S FAILS TO RUN	3.01E-2
EPS-DGN-FS-DG3B	DIESEL GENERATOR 3B-S FAILS TO START	2.89E-3
EPS-DGN-TM-DG3B	DG 3B-S UNAVAILABLE DUE TO TEST AND MAINTENANCE	1.43E-2
EPS-FAN-TM-3BSB	DG-3B ROOM FAN 3B-SB UNAVAILABLE DUE TO T & M	2.00E-3
HPI-AOV-CF-RWSP	COMMON CAUSE FAILURE OF RWSP ISOL AOVs	6.30E-5
HPI-XHE-XM-MFLW	OPERATOR FAILS TO CLOSE RWSP SUCTION AND MINFLOW MOVs	1.00E-4
IE-LOCHS	LOSS OF CONDENSER HEAT SINK	1.00E+0
PPR-SRV-OO-317A	SRV 317A FAILS TO RECLOSE AFTER PASSING STEAM	9.66E-4
PPR-SRV-OO-317B	SRV 317B FAILS TO RECLOSE AFTER PASSING STEAM	9.66E-4

Appendix B: Key Event Trees

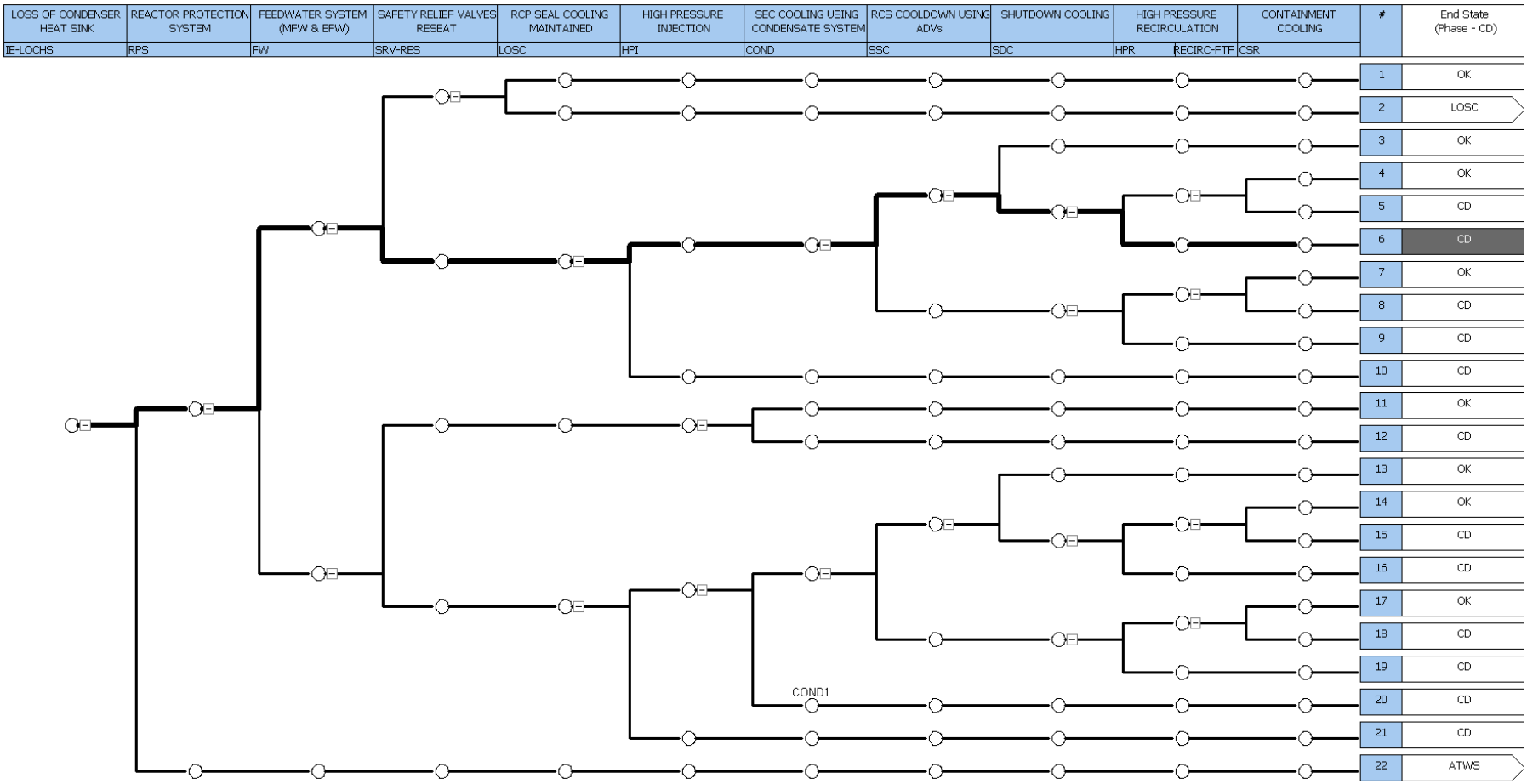

FIGURE B-1. Waterford Steam Electric Station Loss of Condenser Heat Sink Event Tree – Core Damage Sequence 06.

Appendix C: System Drawings

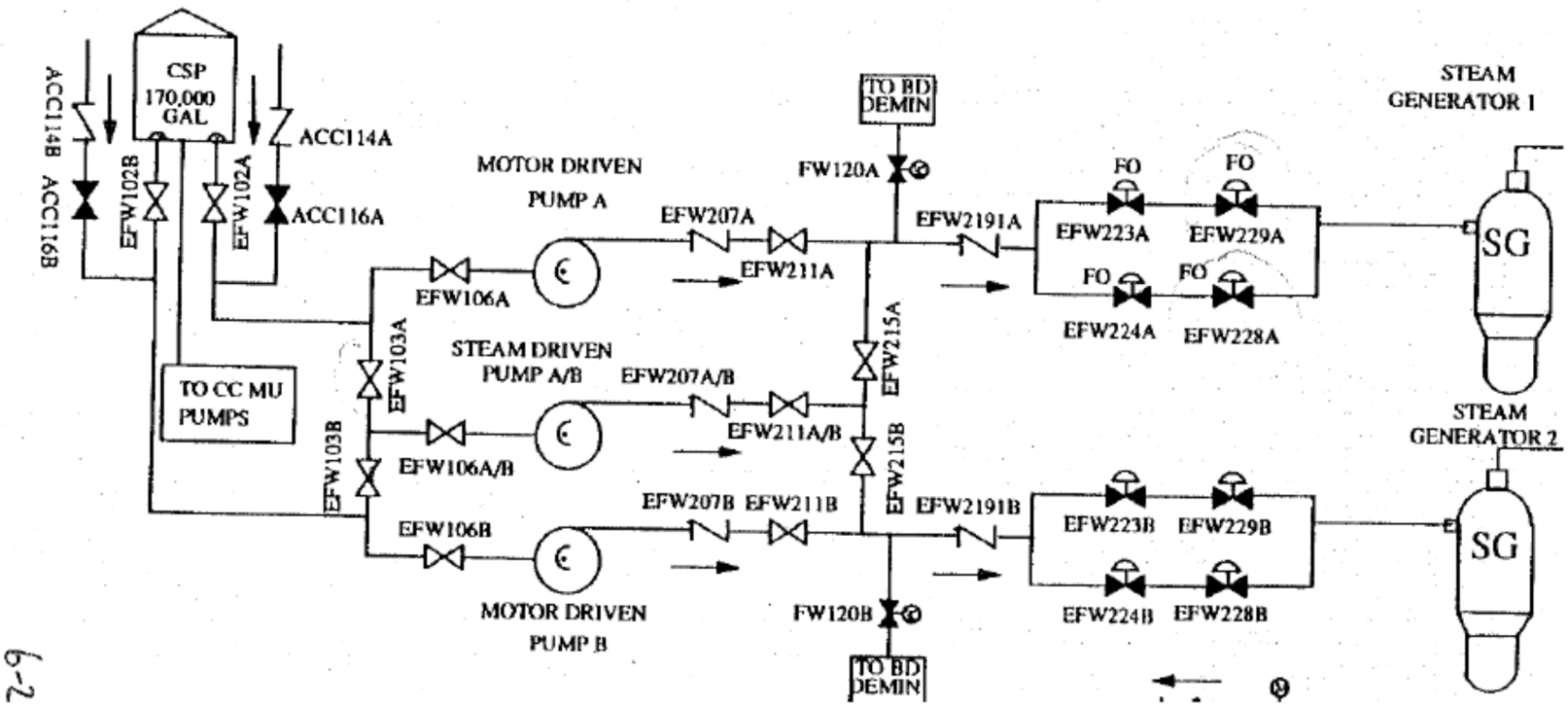

FIGURE C-1. Waterford Electric Steam Station Emergency Feedwater System. EFW224A/B are Primary FCVs and EFW223A/B are Backup FCVs.

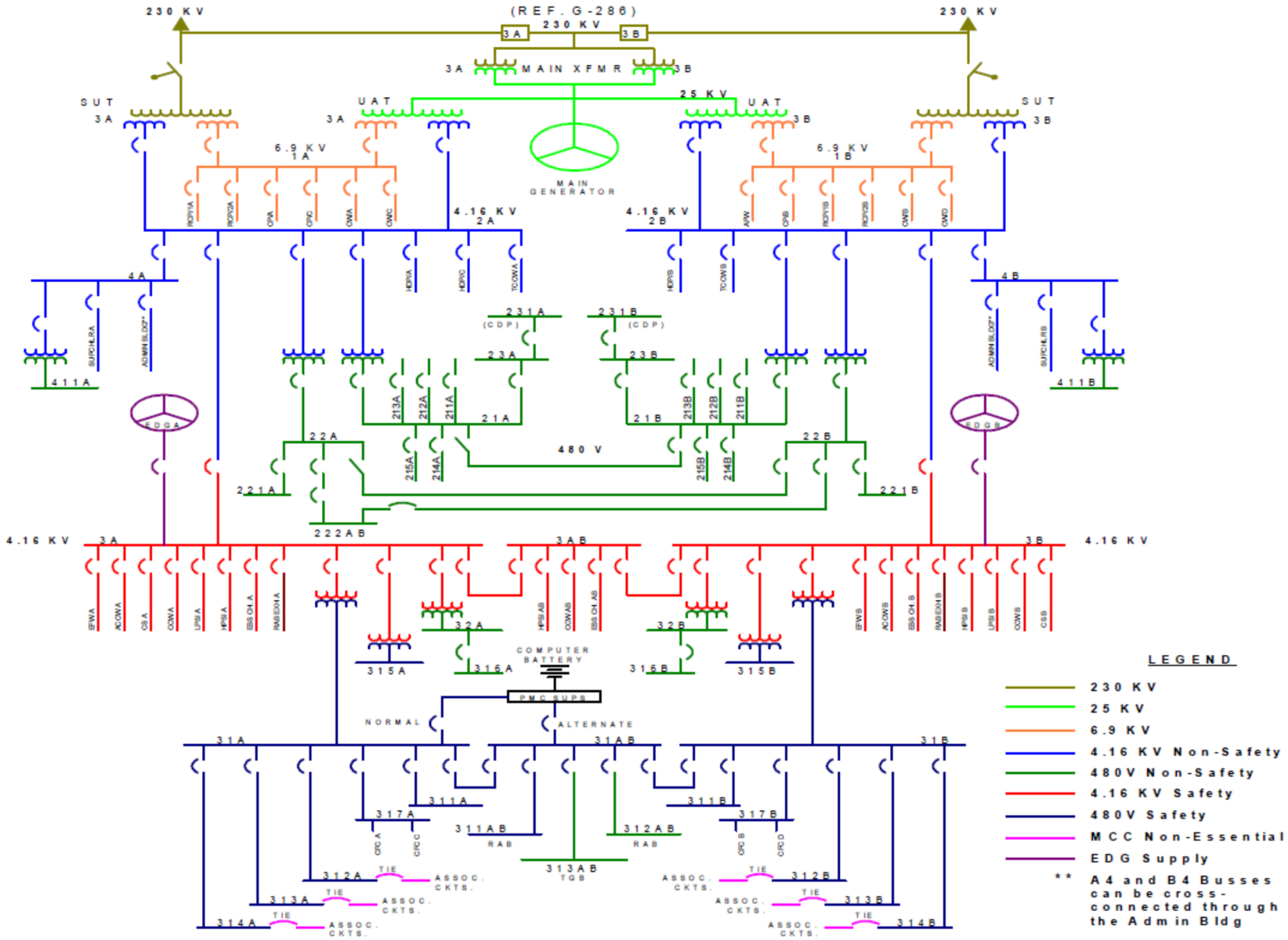

FIGURE C-2. Waterford Steam Electric Station Plant Electrical Distribution System.