Exelon Generation®

200 Exelon Way
Kennett Square, PA 19348

www.exeloncorp.com

10 CFR 50.55a

RS-16-142
October 31, 2016

U.S. Nuclear Regulatory Commission
ATTN: Document Control Desk
Washington, DC 20555-0001

Braidwood Station, Units 1 and 2
Renewed Facility Operating License Nos. NPF-72 and NPF-77
NRC Docket Nos. STN 50-456 and STN 50-457

Byron Station, Units 1 and 2
Renewed Facility Operating License Nos. NPF-37 and NPF-66
NRC Docket Nos. STN 50-454 and STN 50-455

Calvert Cliffs Nuclear Power Plant, Units 1 and 2
Renewed Facility Operating License Nos. DPR-53 and DPR-69
NRC Docket Nos. 50-317 and 50-318

Dresden Nuclear Power Station, Units 2 and 3
Renewed Facility Operating License Nos. DPR-19 and DPR-25
NRC Docket Nos. 50-237 and 50-249

Limerick Generating Station, Units 1 and 2
Renewed Facility Operating License Nos. NPF-39 and NPF-85
NRC Docket Nos. 50-352 and 50-353

Nine Mile Point Nuclear Station, Units 1 and 2
Renewed Facility Operating License Nos. DPR-63 and NPF-69
NRC Docket Nos. 50-220 and 50-410

Peach Bottom Atomic Power Station, Units 2 and 3
Renewed Facility Operating License Nos. DPR-44 and DPR-56
NRC Docket Nos. 50-277 and 50-278

Quad Cities Nuclear Power Station, Units 1 and 2
Renewed Facility Operating License Nos. DPR-29 and DPR-30
NRC Docket Nos. 50-254 and 50-265

R. E. Ginna Nuclear Power Plant
Renewed Facility Operating License No. DPR-18
NRC Docket No. 50-244

Three Mile Island Nuclear Station, Unit 1
Renewed Facility Operating License No. DPR-50
NRC Docket No. 50-289

Subject: Proposed Alternative for Examination of ASME Section XI, Examination Category B-G-1, Item Number B6.40, Threads in Flange

In accordance with 10 CFR 50.55a(z)(1), Exelon Generation Company, LLC (Exelon) is requesting a proposed alternative to the American Society of Mechanical Engineers (ASME) Boiler and Pressure Vessel Code, Section XI, "Rules for Inservice Inspection of Nuclear Power Plant Components," on the basis that the proposed alternative provides an acceptable level of quality and safety. Specifically, Exelon is requesting an alternative to volumetric examination of reactor vessel threads in closure head flange connections.

The basis for this request is provided in the Attachment. There are no commitments contained in this submittal.

If you have any questions regarding this submittal, please contact Stephanie Hanson at 610-765-5143.

Respectfully,

James Barstow
Director – Licensing and Regulatory Affairs
Exelon Generation Company, LLC

Attachment: Proposed Alternative for Examination of ASME Section XI, Examination Category B-G-1, Item Number B6.40, Threads in Flange

cc: Regional Administrator - NRC Region I
Regional Administrator - NRC Region III
NRC Senior Resident Inspector - Braidwood Station
NRC Senior Resident Inspector - Byron Station
NRC Senior Resident Inspector - Calvert Cliffs Nuclear Power Plant
NRC Senior Resident Inspector - Dresden Nuclear Power Station
NRC Senior Resident Inspector - Limerick Generating Station
NRC Senior Resident Inspector - Nine Mile Point Nuclear Station
NRC Senior Resident Inspector - Peach Bottom Atomic Power Station
NRC Senior Resident Inspector - Quad Cities Nuclear Power Station
NRC Senior Resident Inspector - R.E. Ginna Nuclear Power Plant
NRC Senior Resident Inspector - Three Mile Island Nuclear Station, Unit 1
NRC Project Manager - Braidwood Station
NRC Project Manager - Byron Station
NRC Project Manager - Calvert Cliffs Nuclear Power Plant
NRC Project Manager - Dresden Nuclear Power Station

cc (contd.):

NRC Project Manager - Limerick Generating Station
NRC Project Manager - Nine Mile Point Nuclear Station
NRC Project Manager - Peach Bottom Atomic Power Station
NRC Project Manager - Quad Cities Nuclear Power Station
NRC Project Manager - R.E. Ginna Nuclear Power Plant
NRC Project Manager - Three Mile Island Nuclear Station, Unit 1
S. Gray, MD, DNR

ATTACHMENT

Proposed Alternative for Examination of ASME Section XI, Examination Category B-G-1, Item Number B6.40, Threads in Flange

10 CFR 50.55a RELIEF REQUEST:
Proposed Alternative for Examination of ASME Section XI,
Examination Category B-G-1, Item Number B6.40, Threads in Flange

1. ASME Code Component(s) Affected:

All American Society of Mechanical Engineers (ASME), Section XI, Examination Category B-G-1, Item Number B6.40 threads in flange locations at the sites listed in Section 2 of this relief request.

2. Applicable Code Edition and Addenda:

PLANT	INTERVAL	EDITION	START	END
Braidwood Station, Units 1 and 2	Third	2001 Edition, through 2003 Addenda	July 29, 2008 October 17, 2008	July 28, 2018 October 16, 2018
Byron Station, Units 1 and 2	Fourth	2007 Edition, through 2008 Addenda	July 16, 2016	July 15, 2025
Calvert Cliffs Nuclear Power Plant, Units 1 and 2	Fourth	2004 Edition	October 10, 2009	June 30, 2019
Dresden Nuclear Power Station, Units 2 and 3	Fifth	2007 Edition, through 2008 Addenda	January 20, 2013	January 19, 2023
Limerick Generating Station, Units 1 and 2	Fourth	2007 Edition, through 2008 Addenda	February 1, 2017	January 31, 2027
Nine Mile Point Nuclear Station, Unit 1	Fourth	2004 Edition	August 23, 2009	August 22, 2019
Nine Mile Point Nuclear Station, Unit 2	Third	2004 Edition	April 5, 2008	June 15, 2018
Peach Bottom Atomic Power Station, Units 2 and 3	Fourth	2001 Edition, through 2003 Addenda	November 5, 2008	December 31, 2018
Quad Cities Nuclear Power Station, Units 1 and 2	Fifth	2007 Edition, through 2008 Addenda	April 2, 2013	April 1, 2023
R.E. Ginna Nuclear Power Plant	Fifth	2004 Edition	January 1, 2010	December 31, 2019
Three Mile Island Nuclear Station, Unit 1	Fourth	2004 Edition	April 20, 2011	April 19, 2022

3. Applicable Code Requirement:

The Reactor Pressure Vessel (RPV) threads in flange, Examination Category B-G-1, Item Number B6.40, are examined using a volumetric examination technique with 100% of the flange threaded stud holes examined every In-service Inspection (ISI) interval. The examination area is the one-inch area around each RPV stud hole, as shown on Figure IWB-2500-12.

4. Reason for Request:

In accordance with 10 CFR 50.55a(z)(1), Exelon Generation Company, LLC (Exelon) is requesting a proposed alternative from the requirement to perform in-service ultrasonic examinations of Examination Category B-G-1, Item Number B6.40, Threads in Flange. Exelon has worked with the industry to evaluate eliminating the RPV threads in flange examination requirement. Licensees in the U.S. and internationally have worked with the Electric Power Research Institute (EPRI) to produce Technical Report No. 3002007626, "Nondestructive Evaluation: Reactor Pressure Vessel Threads in Flange Examination Requirements" (Reference 1), which provides the basis for elimination of the requirement. The report includes a survey of inspection results from over 168 units, a review of operating experience related to RPV flange/bolting, and a flaw tolerance evaluation. The conclusion from this evaluation is that the current requirements are not commensurate with the associated burden (worker exposure, personnel safety, radwaste, critical path time, and additional time at reduced water inventory) of the examination. The technical basis for this alternative is discussed in more detail below.

Potential Degradation Mechanisms

An evaluation of potential degradation mechanisms that could impact flange/threads reliability was performed as part of Reference 1. Potential types of degradation evaluated included pitting, intergranular attack, corrosion fatigue, stress corrosion cracking, crevice corrosion, velocity phenome, dealloying corrosion and general corrosion, stress relaxation, creep, mechanical wear and mechanical/thermal fatigue. Other than the potential for mechanical/thermal fatigue, there are no active degradation mechanisms identified for the threads in flange component.

The EPRI report notes a general conclusion from Reference 2, (which includes work supported by the U.S. Nuclear Regulatory Commission (NRC)) that when a component item has no active degradation mechanism present, and a preservice inspection has confirmed that the inspection volume is in good condition (i.e., no flaws / indications), then subsequent in-service inspections do not provide additional value going forward. As discussed in the Operating Experience review summary below, the RPV flange ligaments have received the required pre-service examinations and over 10,000 in-service inspections, with no relevant findings.

To address the potential for mechanical/thermal fatigue, Reference 1 documents a stress analysis and flaw tolerance evaluation of the flange thread area to assess mechanical/thermal fatigue potential. The evaluation consists of two parts. In the first part, a stress analysis is performed considering all applicable loads on the threads in flange component. In the second part, the stresses at the critical locations of the component are used in a fracture mechanics evaluation to determine the allowable flaw size for the component as well as how much time it will take for a postulated initial flaw to grow to the allowable flaw size using guidelines in the ASME Code, Section XI, IWB-3500. The Pressurized Water Reactor (PWR) design was selected because of its higher design

pressure and temperature. A representative geometry for the finite element model used the largest PWR RPV diameter along with the largest bolts and the highest number of bolts. The larger and more numerous bolt configuration results in less flange material between bolt holes, whereas the larger RPV diameter results in higher pressure and thermal stresses.

Stress Analysis

A stress analysis was performed in Reference 1 to determine the stresses at critical regions of the thread in flange component as input to a flaw tolerance evaluation. Sixteen nuclear plant units (ten PWRs and six Boiling Water Reactors (BWRs)) were considered in the analysis. The evaluation was performed using a geometric configuration that bounds the sixteen units considered in this effort. The details of the RPV parameters for Exelon plants as compared to the bounding values used in the evaluation are shown in Table 1. Not all the Exelon plants are bounded by the parameters evaluated in Reference 1; however, the preload stresses for each unit are bounded by the Reference 1 report. Specifically, the Reference 1 preload stress is 42,338 psi whereas the maximum Exelon Unit preload stress is 36,711 psi at Limerick Units 1 and 2. The Exelon unit specific stresses are bounded by the Reference 1 report which demonstrates that the report remains applicable to all the units identified in this relief request. Dimensions of the analyzed geometry are shown in Figure 1.

Table 1: Comparison of Exelon Plant Parameters to Bounding Values Used in Analysis

Plant	No. of Studs Currently Installed	Minimum No. of Studs Evaluated	Stud Nominal Diameter (inches)	RPV Inside Diameter at Stud Hole (inches)	Flange Thickness at Stud Hole (inches)	Design Pressure (psia)	Preload Stress (psi)
Braidwood 1	54	53	6.75	171.06	16.97	2500	33,323
Braidwood 2	53	53	6.75	171.06	16.97	2500	33,323
Byron 1	54	53	6.75	171.06	16.97	2500	33,323
Byron 2	54	53	6.75	171.06	16.97	2500	33,323
Calvert Cliffs 1	54	54	7	172	16.5	2500	30,747
Calvert Cliffs 2	54	54	7	172	16.5	2500	30,747
Dresden 2	92	92	6	251.37	13.94	1265	26,549
Dresden 3	92	92	6	251.37	13.94	1265	26,549
Ginna	48	48	6	128.31	14.56	2500	26,202
Limerick 1	76	76	5.62	251.87	12.56	1265	36,711
Limerick 2	76	76	5.62	251.87	12.56	1265	36,711
Nine Mile Point 1	64	64	6.25	213.44	13.84	1265	25,356
Nine Mile Point 2	76	76	6.5	251.5	13.5	1265	27,411
Peach Bottom 2	92	92	6	267.25	14	1280	30,363
Peach Bottom 3	92	92	6	267.25	14	1280	30,363
Quad Cities 1	92	92	6	251.37	13.94	1265	26,542
Quad Cities 2	92	92	6	251.37	13.94	1265	26,542
Three Mile Island 1	60	60	6.5	167.25	16.06	2515	30,527
Range for 16 Units Considered	54 - 60	54	6.5 - 7.0	157 - 173	15 -16	2500	42,338
Bounding Values Used in Analysis	**54**	**NA**	**6.0**	**173**	**16**	**2500**	**NA**

The analytical model is shown in Figures 2 and 3. The loads considered in the analysis consisted of:

- A design pressure of 2500 psia at an operating temperature of 600°F was applied to all internal surface exposed to internal pressure.
- Bolt/stud preload – The preload on the bounding geometry is calculated as:

$$P_{preload} = \frac{C \cdot P \cdot ID^2}{S \cdot D^2} = \frac{1.1 \cdot 2500 \cdot 173^2}{54 \cdot 6^2} = 42{,}338 \text{ psi}$$

where:

$P_{preload}$	=	Preload pressure to be applied on modeled bolt (psi)
P	=	Internal pressure (psi)
ID	=	Largest inside diameter of RPV (in.)
C	=	Bolt-up contingencies (+10%)
S	=	Least number of studs
D	=	Smallest stud diameter (in.)

- Thermal stresses - The only significant transient affecting the bolting flange is heat-up/cooldown. This transient typically consists of a steady 100°F/hour ramp up to the operating temperature, with a corresponding pressure ramp up to the operating pressure.

The ANSYS finite element analysis program was used to determine the stresses in the thread in flange component for the three loads described above.

Flaw Tolerance Evaluation

A flaw tolerance evaluation was performed using the results of the stress analysis to determine how long it would take an initial postulated flaw to reach the ASME Code, Section XI allowable flaw size. A linear elastic fracture mechanics evaluation consistent with ASME Code, Section XI, IWB-3600 was performed.

Stress intensity factors (K's) at four flaw depths of a 360° inside-surface-connected, partial-through-wall circumferential flaws are calculated using finite element analysis techniques with the model described above. The maximum stress intensity factor (K) values around the bolt hole circumference for each flaw depth (*a*) are extracted and used to perform the crack growth calculations. The circumferential flaw is modeled to start between the 10th and 11th flange threads from the top end of the flange because that is where the largest tensile axial stress occurs. The modeled flaw depth–to–wall thickness ratios (a/t) are 0.02, 0.29, 0.55, and 0.77, as measured in any direction from the stud hole. This creates an ellipsoidal flaw shape around the circumference of the flange, as shown in Figure 4 for the flaw model with a/t = 0.77 a/t crack model. The crack tip mesh for the other flaw depths follows the same pattern. When preload is not being applied, the stud, stud threads, and flange threads are not modeled. The model is otherwise unchanged between load cases.

The maximum K results are summarized in Table 2 for the four crack depths. Because the crack tip varies in depth around the circumference, the maximum K from all locations at each crack size is conservatively used for the *K vs. a* profile.

Table 2: Maximum K vs. a/t

Load	K at Crack Depth (ksi√in)			
	0.02 a/t	0.29 a/t	0.55 a/t	0.77 a/t
Preload	11.2	17.4	15.5	13.9
Preload + Heatup + Pressure	13.0	19.8	16.1	16.3

The allowable stress intensity factor was determined based on the acceptance criteria in ASME Section XI, IWB-3610/Appendix A which states that:

$K_I < K_{Ic}/\sqrt{10} = 69.6$ ksi√in

Where,

K_I = Allowable stress intensity factor (ksi√in)

K_{Ic} = Lower bound fracture toughness at operating temperature (220 ksi√in)

As can be seen from Table 2, the allowable stress intensity factor is not exceeded for all crack depths up to the deepest analyzed flaw of a/t = 0.77. Hence the allowable flaw depth of the 360° circumferential flaw is at least 77% of the thickness of the flange. The allowable flaw depth is assumed to be equal to the deepest modeled crack for the purposes of this analysis.

Some Exelon plants have RPV closure heads in service without studs in all the original designed flange bolt hole locations. The thread in flange configuration has much redundancy. As seen from the stress intensity factor (K) calculation documented in Table 6-1 of Reference 1 (reproduced in Table 2 above), the maximum K is 19.8 ksi√in. The allowable K calculated in Section 6.2.2 of the report is 69.6 ksi√in, significantly higher than the calculated value. Assuming an RPV flange with 60 studs originally and one inoperable stud, the increase in K is about 1.7% resulting in a maximum K of about 20.14 ksi√in which is still significantly less than the allowable value.

For the crack growth evaluation, an initial postulated flaw size of 0.2 in. (5.08 mm) is chosen consistent with the ASME Code, Section XI IWB-3500 flaw acceptance standards. The deepest flaw analyzed is a/t = 0.77 because of the inherent limits of the model. Two load cases are considered for fatigue crack growth: heat-up/cooldown and bolt preload. The heat-up/cooldown load case includes the stresses due to thermal and internal pressure loads and is conservatively assumed to occur 50 times per year. The bolt preload is assumed to be present and constant during the load cycling of the heat-up/cooldown load case. The bolt preload load case is conservatively assumed to occur five times per year, and these cycles do not include thermal or internal pressure. The resulting crack growth was determined to be negligible due to the small delta K and the relatively low number of cycles associated with the transients evaluated. Because the crack growth is insignificant, the allowable flaw size will not be reached and the integrity of the component is not challenged for at least 80 years (original 40-year design life plus additional 40 years of plant life extension).

The stress analysis / flaw tolerance evaluation presented above shows that the thread in flange component at the units in the relief request is very flaw tolerant and can operate for 80 years without violating ASME Code, Section XI safety margins. This clearly demonstrates that the thread in flange examinations can be eliminated without affecting the safety of the RPV.

Operating Experience Review Summary

As discussed above, the results of the survey, which includes results from the Exelon plants in this relief request, confirmed that the RPV threads in flange examination are adversely impacting outage activities (worker exposure, personnel safety, radwaste, critical path time, and additional time at reduced water inventory) while not identifying any service induced degradations. Specifically, for the U.S. fleet, a total of 94 units have responded to date and none of these units have identified any type of degradation. As can be seen in Table 3 below, the data is encompassing. The 94 units represent data from 33 BWRs and 61 PWRs. For the BWR units, a total 3,793 examinations were conducted and for the PWR units a total of 6,869 examinations were conducted, with no service-induced degradation identified. The response data includes information from all of the plant designs in operation in the U.S. and includes BWR-2, -3, -4, -5 and -6 designs. The PWR plants include the 2-loop, 3-loop and 4-loop designs and each of the PWR NSSS designs (i.e., Babcock & Wilcox, Combustion Engineering and Westinghouse).

Table 3: Summary of Survey Results – US Fleet

Plant Type	Number of Units	Number of Examinations	Number of Reportable Indications
BWR	33	3,793	0
PWR	61	6,869	0
Total	94	10,662	0

Related RPV Assessments

In addition to the examination history and flaw tolerance discussed above, Reference 1 discusses studies conducted in response to the issuance of the Anticipated Transient Without Scram (ATWS) Rule by the NRC. This rule was issued to require design changes to reduce expected ATWS frequency and consequences. Many studies have been conducted to understand the ATWS phenomena and key contributors to successful response to an ATWS event. In particular, the reactor coolant system (RCS) and its individual components were reviewed to determine weak links. As an example, even though significant structural margin was identified in USNRC SECY-83-293 for PWRs, the ASME Service Level C pressure of 3200 psig was assumed to be an unacceptable plant condition. While a higher ASME service level might be defensible for major RCS components, other portions of the RCS could deform to the point of inoperability. Additionally, there was the concern that

steam generator tubes might fail before other RCS components, with a resultant bypass of containment. The key take-away for these studies is that the RPV flange ligament was not identified as a weak link and other RCS components were significantly more limiting. Thus, there is substantial structural margin associated with the RPV flange.

In summary, Reference 1 identifies that the RPV threads in flange are performing with very high reliability based on operating and examination experience. This is due to the robust design and a relatively benign operating environment (e.g., the number and magnitude of transients is small, generally not in contact with primary water at plant operating temperatures/pressures, etc.). The robust design is manifested in that plant operation has been allowed at several plants even with a bolt/stud assumed to be out of service. As such, significant degradation of multiple bolts/threads would be needed prior to any RCS leakage.

5. Proposed Alternative and Basis for Use:

In lieu of the in-service requirements for a volumetric ultrasonic examination, Exelon proposes that the industry report (Reference 1) provides an acceptable technical basis for eliminating the requirement for this examination because the alternative maintains an acceptable level of quality and safety.

This report provides the basis for the elimination of the RPV threads in flange examination requirement (ASME Section XI Examination Category B-G-1, Item Number B6.40). This report was developed because evidence had suggested that there have been no occurrences of service-induced degradation and there are negative impacts on worker dose, personnel safety, radwaste, critical path time for these examinations and additional time at reduced water inventory.

Since there is reasonable assurance that the proposed alternative is an acceptable alternate approach to the performance of the ultrasonic examinations, Exelon requests authorization to use the proposed alternative pursuant to 10 CFR 50.55a(z)(1) on the basis that use of the alternative provides an acceptable level of quality and safety.

To protect against non-service related degradation, Exelon uses detailed procedures for the care and visual inspection of the RPV studs and the threads in flange each time the RPV closure head is removed. Care is taken to inspect the RPV threads for damage and to protect threads from damage when the studs are removed. Prior to reinstallation, the studs and stud holes are cleaned and lubricated. The studs are then replaced and tensioned into the RPV flange. This activity is performed each time the closure head is removed, and the procedure documents each step. These controlled maintenance activities provide further assurance that degradation is detected and mitigated prior to returning the reactor to service.

6. Duration of Proposed Alternative:

This relief request will be applied for the duration of the inservice inspection intervals defined in Section 2 of this relief request or such time as the NRC approves an applicable alternative in Regulatory Guide 1.147 or other document.

7. Precedent:

None

8. References:

1. Nondestructive Evaluation: Reactor Pressure Vessel Threads in Flange Examination Requirements. EPRI, Palo Alto, CA: 2016. 3002007626. (ADAMS Accession No. ML16221A068)

2. American Society of Mechanical Engineers, Risk-Based Inspection: Development of Guidelines, Volume 2-Part 1 and Volume 2-Part 2, Light Water Reactor (LWR) Nuclear Power Plant Components. CRTD-Vols. 20-2 and 20-4, ASME Research Task Force on Risk-Based Inspection Guidelines, Washington, D.C., 1992 and 1998.

Figure 1
Modeled Dimensions

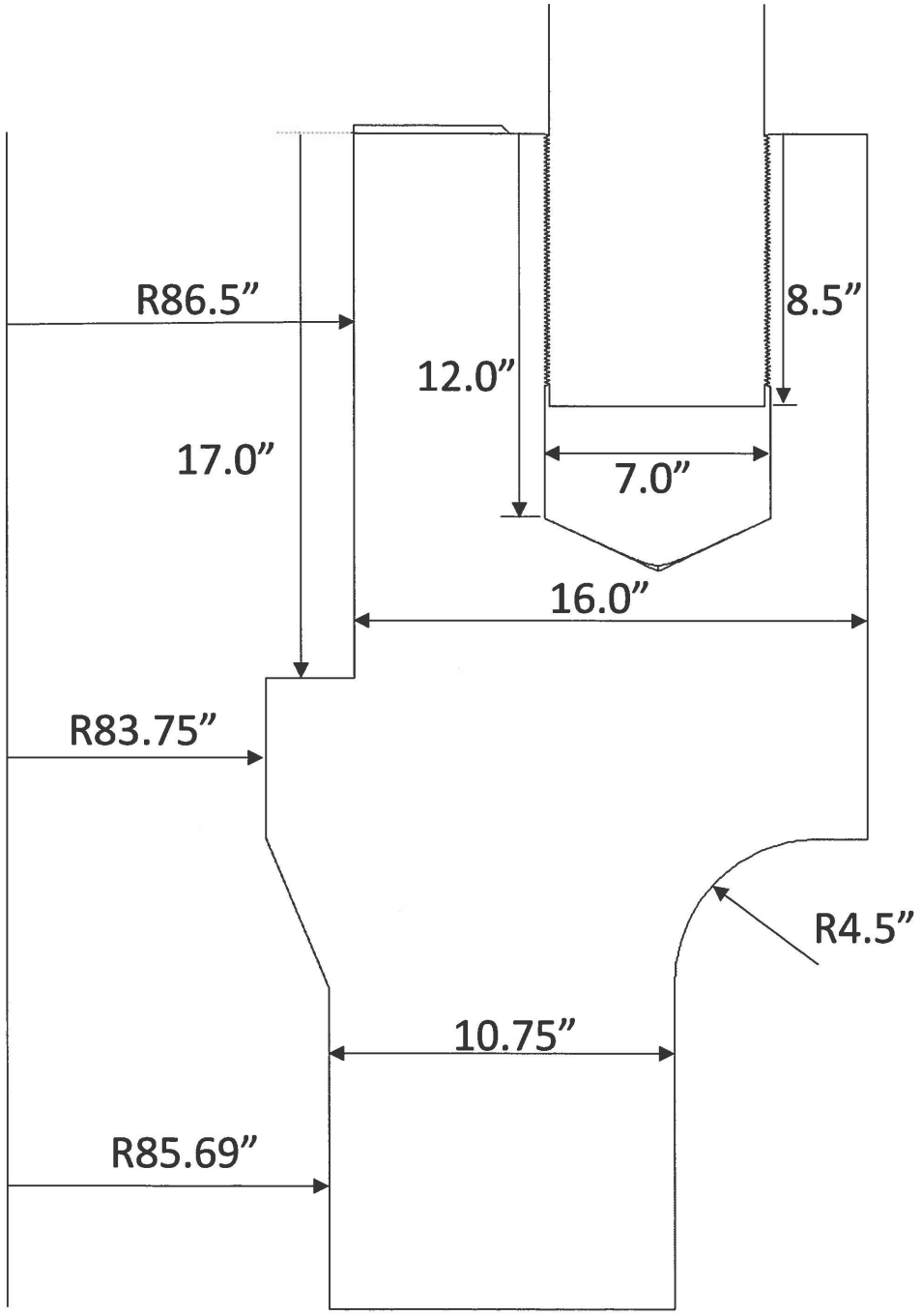

Figure 2
Finite Element Model Showing Bolt and Flange Connection

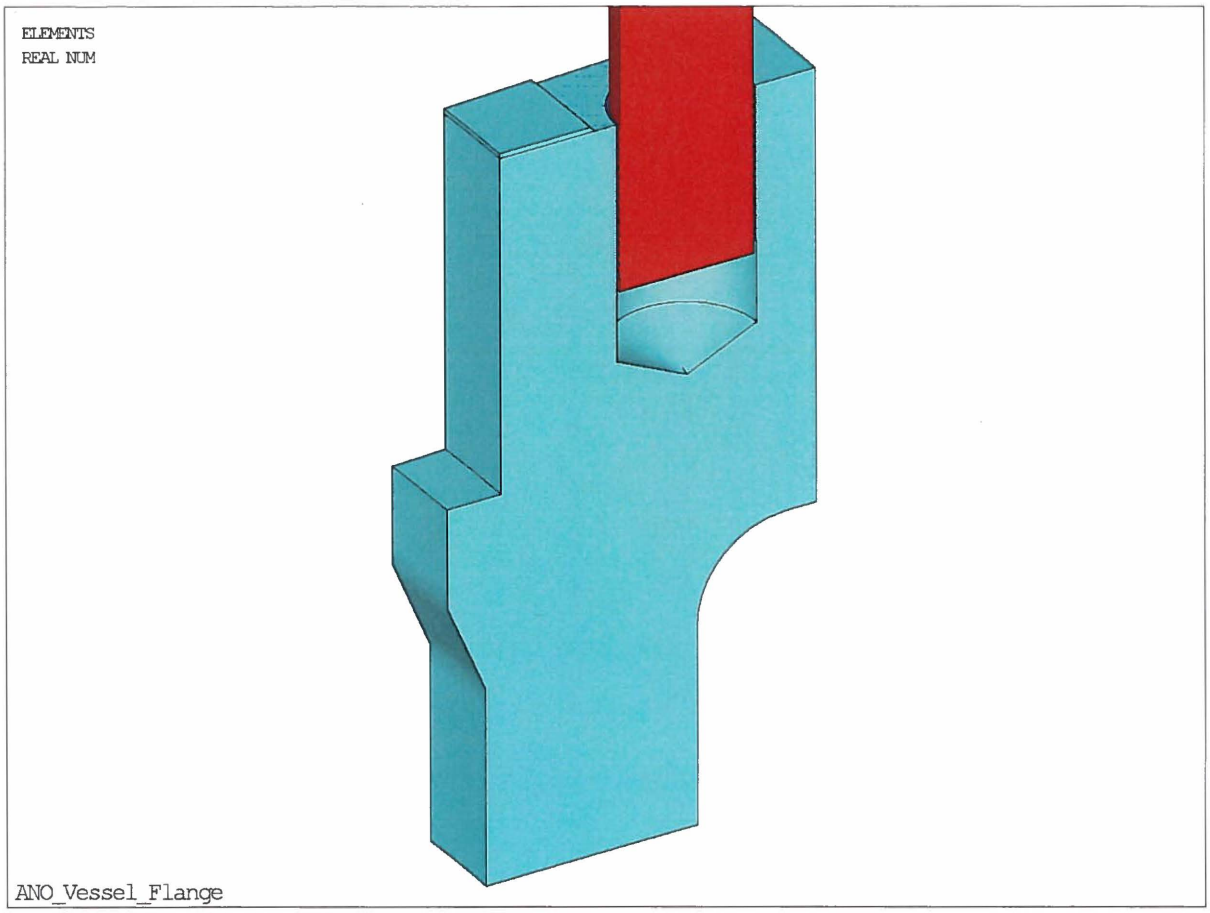

Figure 3
Finite Element Model Mesh with Detail at Thread Location

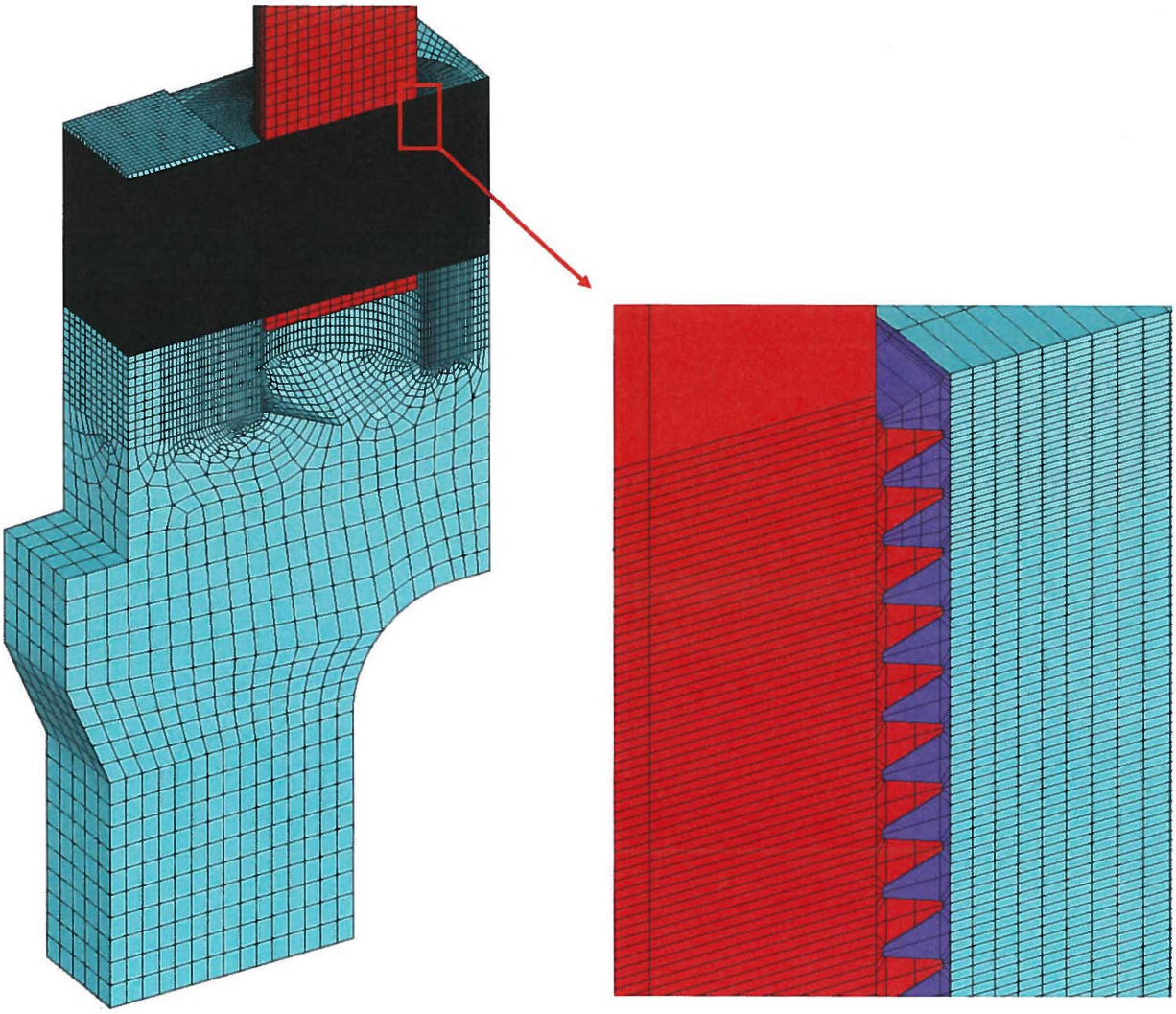
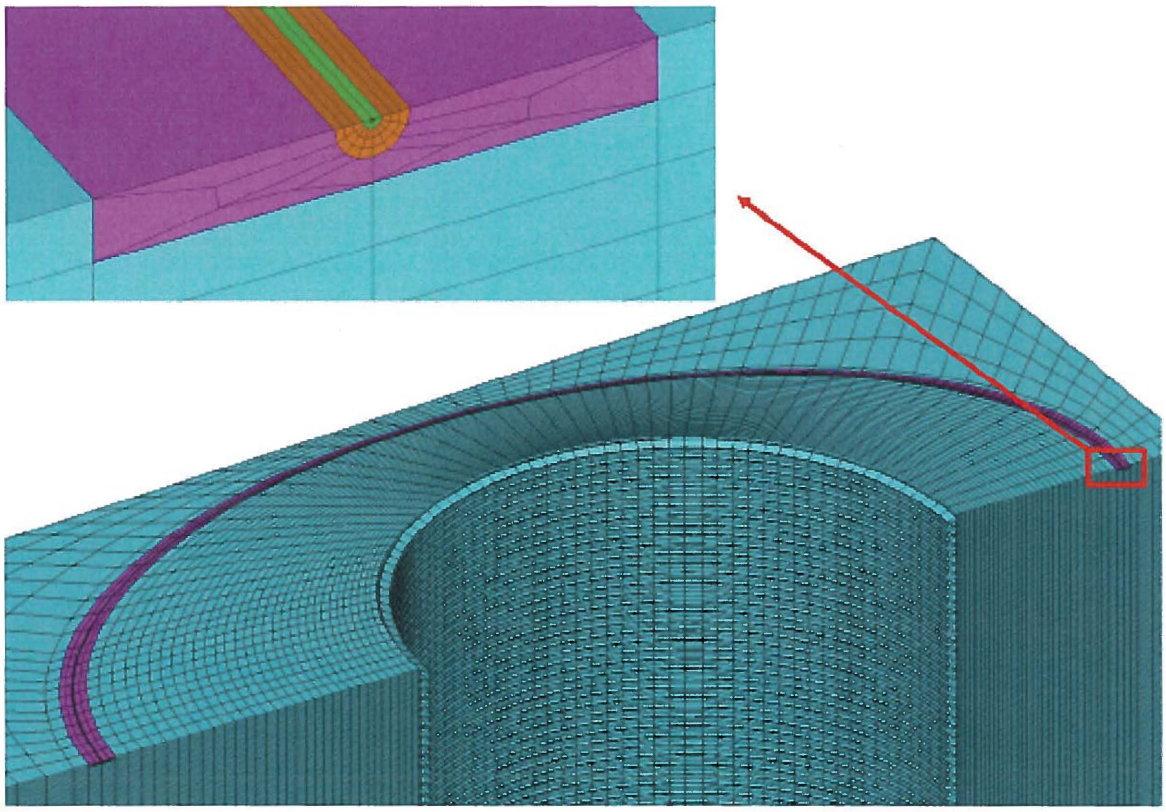
Figure 4
Cross Section of Circumferential Flaw with Crack Tip Elements Inserted After 10th Thread from Top of Flange