Official Transcript of Proceedings

NUCLEAR REGULATORY COMMISSION

Title: Advisory Committee on Reactor Safeguards
APR 1400 Subcommittee Meeting

Docket Number: (n/a)

Location: Rockville, Maryland

Date: Tuesday, October 4, 2016

Work Order No.: NRC-2653 Pages 1-464

NEAL R. GROSS AND CO., INC.
Court Reporters and Transcribers
1323 Rhode Island Avenue, N.W.
Washington, D.C. 20005
(202) 234-4433

1
2
3
4 DISCLAIMER
5
6
7 UNITED STATES NUCLEAR REGULATORY COMMISSION'S
8 ADVISORY COMMITTEE ON REACTOR SAFEGUARDS
9
10
11 The contents of this transcript of the
12 proceeding of the United States Nuclear Regulatory
13 Commission Advisory Committee on Reactor Safeguards,
14 as reported herein, is a record of the discussions
15 recorded at the meeting.
16
17 This transcript has not been reviewed,
18 corrected, and edited, and it may contain
19 inaccuracies.
20
21
22
23

UNITED STATES OF AMERICA

NUCLEAR REGULATORY COMMISSION

+ + + + +

ADVISORY COMMITTEE ON REACTOR SAFEGUARDS

(ACRS)

+ + + + +

APR 1400 SUBCOMMITTEE

+ + + + +

TUESDAY

OCTOBER 4, 2016

+ + + + +

ROCKVILLE, MARYLAND

+ + + + +

The Subcommittee met at the Nuclear Regulatory Commission, Two White Flint North, Room T2B1, 11545 Rockville Pike, at 8:29 a.m., Ronald G. Ballinger, Chairman, presiding.

COMMITTEE MEMBERS:

RONALD G. BALLINGER, Chairman

CHARLES H. BROWN, JR., Member

MARGARET CHU, Member

JOSE A. MARCH-LEUBA, Member

DANA A. POWERS, Member

HAROLD B. RAY, Member

JOY REMPE, Member

PETER C. RICCARDELLA, Member

GORDON R. SKILLMAN, Member

JOHN W. STETKAR, Chairman

MATTHEW W. SUNSERI, Member

DESIGNATED FEDERAL OFFICIAL:

CHRISTOPHER L. BROWN

ALSO PRESENT:

DENNIS ANDRUKAT, NRO

LARRY BURKHART, NRO

CHANG JOON BAE, KEPCO E&C

BOB CALDWELL, NRO

SUNG IL CHO, DOOSAN

JINKYU CHOI, KHNP

JOON WAN CHOI, KEPCO E&C

JEFF CIOCCO, NRO

RICH CLEMENT, NRO

CHRIS COOK, NRO

ZACHARY GRAN, NRO

CHEWUNG HA

NICHOLAS HANSING, NRO

BRAD HARVEY, NRO

RAUL HERNANDEZ, NRO

ALSO PRESENT, Cont'd.

JOHN HONCHARIK, NRO

SEOKHWAN HUR, KEPCO E&C

KYEONG MO HWANG, KEPCO E&C

HYEOK JEONG, KEPCO E&C

JAMES SUK JHUN, KEPCO E&C and Bechtel

SANGHO KANG, KEPCO E&C

STORM KAUFFMAN, DOOSAN/MPR

KIMBERLY KEITHLINE, MPR

HAMSANG KIM, KHNP

JOONKON KIM, KEPCO E&C

JUNGHO KIM, KHNP

TAE HAN KIM, KEPCO E&C

YOUNGKI KIM, KEPCO E&C

WILLEM KRIEL, KHNP/DOOSAN

RON LAVERA, NRO

CHOMGIN LIM, DOOSAN

GREG MAKAR, NRO

MICHAEL D. MAZAIKA, NRO

MATTHEW A. MITCHELL, NRO

KEN MOTT, NRO

RYAN NOLAN, NRO

ANDY OH, KHNP

KEVIN QUINLAN, NRO

TARUN ROY, NRO

ALSO PRESENT, Cont'd.

SUNG-JE SEO, KEPCO E&C

ROB SISK, Westinghouse

COURTNEY ST. PETERS, NRO

ANGELO STUBBS, NRO

ED STUTZRAGE, NRO

IRVING TSANG, DERADS

ROBERT VETTORI, NRO

JESSICA VOVERIS, NRO

JASON WHITE, NRO

STEPHEN WILLIAMS, NRO

GEORGE WUNDER, NRO

ANDREW YESHNIK, NRO

DEANNA ZHANG, NRO

*Present via telephone

C-O-N-T-E-N-T-S

Call to order, Opening Remarks and Objectives.....6

Staff Opening Remarks.....8

CHAPTER 10 - Steam and Power Conversion Systems

Industry.....9

Staff.....145

CHAPTER 11 - Radioactive Waste Management

Industry.....178

Staff.....236

CHAPTER 2.3 - Meteorology.....269

PUBLIC COMMENT.....297

SUBCOMMITTEE MEMBER COMMENTS.....297

ADJOURN.....297

1 P R O C E E D I N G S

2 8:29 a.m.

3 CHAIRMAN BALLINGER: (presiding) The

4 meeting will now come to order.

5 This is a meeting of the APR 1400

6 Subcommittee of the Advisory Committee on Reactor

7 Safeguards. I'm Ronald Ballinger, Chairman of the

8 APR 1400 Subcommittee.

9 ACRS members in attendance today are

10 Margaret Chu, Harold Ray, Dick Skillman, Dana

11 Powers, Matt Sunseri, Pete Riccardella, John

12 Stetkar, Jose March-Leuba, Charlie Brown, and the

13 inestimable -- I'll pronounce it right -- Joy

14 Rempe.

15 (Laughter.)

16 The purpose of today's meeting is for

17 the Subcommittee to receive briefings from Korea

18 Hydro and Nuclear Power Company, KHNP, regarding

19 their design certification application, and NRC

20 staff regarding their safety evaluation review

21 specific to Chapters 10, Steam and Power Conversion

22 Systems, and 11, Radioactive Waste Management, as

23 well as Section 2.3, Meteorology, which was a

24 holdover from last meeting.

25 The rules for participation in today's

meeting were announced in The Federal Register on September 23rd, 2016. The meeting was announced as an open/closed to public meeting. This means that the Chairman can close the meeting as needed to protect information proprietary to KHNP or its vendors. No requests for a statement has been made from the public.

A transcript of the meeting is being kept and will be made available, as stated in The Federal Register notice. Therefore, we request that participants in this meeting use the microphones located throughout the meeting room when addressing the Subcommittee. And please make sure that the little green light is on when you talk on your microphone. Participants should first identify themselves and speak with sufficient clarity and volume so that they can be readily heard.

We have one bridge line established. We have a bridge line established for interested members of the public to listen in. The bridge number and password were published in the agenda posted on the NRC public website.

To minimize disturbance, this public

1 line will be kept in a listen-only mode. And I
2 would also suggest that if you are a member of the
3 public and you are listening in, that you put your
4 system on mute when you are listening, or whatever
5 it takes, because we get a lot of crosstalk outside
6 this room, but it is annoying to everybody. The
7 public will have an opportunity to make a statement
8 to provide comments at a designated time towards
9 the end of the meeting.
10 We request that the meeting attendees
11 and participants silence their cell phones and
12 other electronic devices.
13 At the end of the discussions on
14 Chapters 10 and 11, staff and KHNP can address any
15 questions that were left unanswered from our last
16 meeting on Chapters 2 and 5.
17 Also, I believe that Mr. Stetkar -- and
18 he can reiterate -- we do not need the slides
19 listing the numbers of RAIs. The Chapter 9 meeting
20 will not occur on November the 15th.
21 I now invite Jeff Ciocco, NRO Project
22 Manager, to introduce presenters and start the
23 briefing.
24 MR. CIOCCO: Yes, thank you.

1 My name is Jeff Ciocco. I'm the Lead
2 Project Manager for the APR 1400 Design
3 Certification New Reactor Project.
4 We would like to thank the Subcommittee
5 Chair, the members, as well as the ACRS staff, for
6 having us back. We were here back in September,
7 and as I said prior, this is a significant
8 milestone in our review project to bring our Phase
9 2 Safety Evaluation Reports with Open Items to the
10 ACRS Subcommittee as well as the full Committee.
11 Today we will present Chapters 10, 11, and Section
12 2.3, as will the applicant.
13 So, thank you very much.
14 CHAIRMAN BALLINGER: Okay. The floor
15 is yours.
16 MR. SISK: Thank you, Mr. Chairman.
17 This is Rob Sisk, Westinghouse, just speaking on
18 behalf of KHNP. Thank you for the opportunity to
19 continue in our series of discussions on the APR
20 1400 design certification application. As Jeff
21 indicated, this is our second of a series. Today
22 we will be talking Chapter 10 and 11.
23 I would like to introduce Mr. Sung-Je
24 Seo from KEPCO E&C to lead us through Chapter 10 at

1 this time.

2 MR. SEO: Good morning.

3 My name is Sung-Je Seo. I'm a Chapter

4 leader, Chapter 10 leader. I am KEPCO E&C's EOP

5 mechanical system engineer. Nice to meet you.

6 Thank you.

7 (Mr. Seo begins his presentation over.)

8 Good morning. Let me introduce myself

9 to you. My name is Sung-Je Seo. I work in KEPCO

10 E&C as an EOP mechanical system engineer since

11 1996.

12 My presentation consists of three

13 parts, like shown on this slide, an overview of

14 Chapter 10, Steam and Power Conversion System, and

15 Summary. Overview of Chapter 10 is for to submit

16 our document and RAI summary.

17 Steam and Power Conversion System

18 includes Subsection 10.1, Summary Description;

19 10.2, Turbine Generator; 10.3, Main Steam System,

20 including key review items: flow accelerated

21 corrosion, and 10.4, Other Features, and Summary.

22 This slide shows the list of submitted

23 documents and the RAI summary. KHNP has submitted

24 two documents regarding this Chapter 10, APR 1400,

1 Tier 2 and Tier 1.

2 The RAI summary for Chapter 10 shows
3 below the slide there. KHNP has 71 questions that
4 were issued by the NRC. All questions have been
5 responded. KHNP has 17 open items for DC Chapter
6 10.

7 This slide shows the subsection outline
8 for the Steam and Power Conversion System.
9 Subsection 10.1, the function of the Steam and
10 Power Conversion System is to convert heat energy
11 generated by the nuclear reactor into electric
12 energy. This part will be presented by myself.

13 Subsection 10.2, the turbine generator
14 converts the energy of the steam produced in the
15 two steam generators into the tanker's shaft power
16 and, then, into electrical energy. This Chapter
17 will be presented by Mr. Storm Kauffman.

18 Subsection 10.3, the main stream system
19 is to transport the steam generated in the steam
20 generators to the high-pressure turbine during
21 normal power operation. The main steam system
22 extends from the steam generators up to the turbine
23 stop valves. The main steam system has two steam
24 generators and the two main stream lines from each

1 steam generator to the main stream common header.
2 This part will be presented also by myself.
3 As the key review item, Dr. Kyeong Mo
4 Hwang will present the flow accelerated corrosion.
5 Subsection 10.4, the steam generator
6 blowdown system, which is a system that maintains
7 the chemical characteristics of the second side
8 water within permissible limits, and the whole
9 steam system is to provide an independent safety-
10 related means of supplying auxiliary feedwater for
11 the decay heat re3moval to the steam generators.
12 This part will be presented by Mr. Choi Joon Wan.
13 This slide is for the summary
14 description for the Steam and Power Conversion
15 System, including the following major process
16 systems: turbine generator, main steam system,
17 condensate and feedwater system, turbine bypass
18 system, circulating water system, steam generator
19 blowdown system, and the auxiliary feedwater
20 system. In this presentation only some subsystems
21 with an open item will be presented.
22 MR. KAUFFMAN: I'm Storm Kauffman. I
23 will be discussing Section 10.2, which pertains to
24 the turbine generator system.

1 Repeat for the microphone.
2 I'm Storm Kauffman. I will be
3 presenting Section 10.2 regarding the steam
4 generator and its control system.
5 I have been in front of the ACRS a
6 number of times. The last time was when I was with
7 Naval Reactors. So, I welcome the opportunity to
8 renew the discussion in a new venue or on a new
9 subject.
10 The outline for this section will be to
11 discuss the approach taken for the turbine
12 generator design and control, specifically, the
13 control system and overspeed protection system. In
14 the interest of brevity, I will not cover turbine
15 rotor design and integrity, but, of course, we will
16 welcome any questions that you may have.
17 Turbine missile probability analysis
18 will also be briefly discussed. And then, we will
19 talk about the COL items and how we are using them
20 as a mechanism to assure that the future turbine
21 generator design is appropriate. And finally,
22 discuss the staff's open items.
23 The turbine generator system does not
24 perform any safety-related functions, but it does

1 represent a potential hazard to the plant.
2 Therefore, the NRC has developed a number of
3 criteria that are applied to the turbine generator
4 design to minimize those hazards.
5 In the case of the APR 1400, KHNP has
6 decided to not specify a specific turbine generator
7 design; instead, to allow the COL applicant to
8 select the design. The reason for this is, one,
9 that it facilitates selecting an optimum design
10 from a safety and reliability standpoint at the
11 time that the COL applicant actually intends to
12 proceed with building a plant and has the design
13 information available to show how the NRC criteria
14 are met; and it, also, allows commercially for
15 competitive procurement for the applicant.
16 To do this, we have developed a number
17 of COL items to ensure that the turbine generator
18 system satisfactorily meets the NRC acceptance
19 criteria. Those COL items provide direction to the
20 applicant on how to procure a satisfactory turbine
21 generator system.
22 I believe that most of the discussion
23 we have had with the staff regarding Section 10.2
24 has been in regard to the staff's concern about

availability of enough detailed information to assure that the review could be completed satisfactorily. We believe that we have provided that information. I will explain the approach that we have taken in the next few slides.

Basically, what we have done is to assure a satisfactory turbine generator control system overspeed protection, turbine rotors, and inspection, probability analysis, is provided by the COL applicant by including in the DCD basic functional requirements and design principles that must be adhered to. We have provided an overarching architecture and discussed the need to comply with the extant, the existing-at-the-time regulatory guidance for turbine generator design and control.

I will go through a number of specific portions of the turbine generator control system and, then, talk about the design principles we have specified to assure that the system behaves properly and provides overspeed protection.

In the case of the turbine generator valves --

MEMBER SKILLMAN: Storm, Storm, before

1 you proceed, on this slide and on the slide that
2 follows you have identified very specific items.
3 MR. KAUFFMAN: Yes.
4 MEMBER SKILLMAN: And as you just said,
5 you are developing a set of requirements, I
6 believe, for the COL, for the applicant. But, as
7 you work your way through these items and the ones
8 on the next slide, the specificity is so great that
9 it would appear that, unless those are codified,
10 then this presentation is really for an imaginary
11 governing system, perhaps from a system that has
12 been used in the past that would be applied to a
13 future plan.
14 And so, my concern is, how do you
15 ensure that this level of detail is communicated as
16 a set of requirements for that vendor that will
17 ultimately supply the turbine generator?
18 MR. KAUFFMAN: As I understand the
19 question, you are asking how do we assure that
20 these fairly detailed, specific requirements are,
21 in fact, met by the COL applicant?
22 MEMBER SKILLMAN: That is accurate.
23 MR. KAUFFMAN: Our approach has been to
24 provide functional requirements, basically, a

functional specification, as part of the DCD and, then, refer to those in the COL items as actions that have to be performed by the COL applicant at the time they select the turbine generator design.

I believe this will be clearer by the time I get to the end of the presentation. If we can return to that question, if you still need additional information, I would like to wait until the end.

MEMBER SKILLMAN: Thank you, Storm. That is fine.

MR. KAUFFMAN: Thank you.

MEMBER BROWN: Before you go on --

MR. KAUFFMAN: Yes?

MEMBER BROWN: -- I would like to voice a similar concern that Dick spoke. I notice the staff had mentioned something about including some type of schematics or some type of thing in the DCD to provide clarity of the words. I must have read the section on overspeed trip protection two or three times trying to see if I could draw a diagram, came up with three or four different layouts, not all of them clear as to how they would meet the specific requirements.

1 Now you provide a little bit of a
2 schematic, if you call it a one-line block diagram,
3 but that is all I would have thought you would
4 provide, where you identify or show what you mean
5 by some of these specific requirements in the DCD.
6 That has been done in some of the other design
7 centers that we have worked on in the past. I
8 noticed it was absent, just almost a total reliance
9 on the COL to go off and figure out what the words
10 mean in total.
11 There are some examples when you look
12 at how the -- you have certainly got two different
13 overspeed trips, for instance, the mechanical and
14 the electrical. So, that provides some diversity,
15 redundancy, et cetera, et cetera. So, there is no
16 quarrel with that.
17 But you like to make sure these other
18 systems work properly and that these specifics you
19 call out are actually incorporated into the design;
20 you don't have to fight over them.
21 So, I understand the staff's concern
22 relative to the lack of functional one-line
23 diagrams, not detailed schematics -- that's
24 impossible at this stage -- but functional diagrams

similar to what I would expect on the reactor trip and engineered safeguard systems, which we will face at some later date, to illustrate how you are actually accomplishing the functions.

So, I just wanted to echo Dick's comments relative to my own review. I will let you go ahead, but I looked at the rest of the slides and I really don't see anything that really serves up most of that. But I would just like you to know that in advance.

MR. KAUFFMAN: Okay. Well, I appreciate the comment. We have provided an updated DCD section fairly recently for the staff review to try to address some of those concerns. We are continuing to figure out what is the appropriate level of detail when you don't have a specific design selected.

MEMBER BROWN: Well, the schematic, a beginning of a functional block diagram that you show in your presentation could be used with a little bit of expansion to make it clear how you do things. For instance, are you voting on all the sensors when you go into the primary and backup? Are they independently evaluated independently in

1 each of the two systems? And how are they voted on
2 then? That is all non-technology, non-specific
3 final design from any vendor, but it shows what
4 your intent is on how you want to maintain the
5 diversity, redundancy, and independence. Power
6 supplies weren't even specified, at least in the
7 version of the DCD I saw, were not specified as
8 being for each one. I think I read some words in
9 the SER, one of the SERs, that said they each have
10 independent power supplies, but it wasn't specified
11 in the version of the DCD that I read.
12 Anyway, I will let you go on, but --
13 MR. KAUFFMAN: I understand the
14 comment. I, hopefully, will address at least a
15 large portion of it.
16 And our latest revision of the DCD,
17 which the staff has yet to complete review, again,
18 we have tried to address those same questions from
19 the staff.
20 MEMBER STETKAR: Storm, I was going to
21 wait since you asked us to wait, but I might as
22 well get mine out the table.
23 I had the same comment. I can't
24 understand how you intend the system to work. In

1 particular, I have no concept of how you intend the
2 emergency trip fluid system to work. And yet --
3 and yet -- in the DCD you have very specific design
4 requirements.
5 I will quote: "It consists of an
6 unbalanced string" -- this is a mechanical trip --
7 "that is activated by centrifugal force" -- I got
8 that -- "against a spring" -- I got that -- "when
9 the turbine overspeeds; thus, causing an eccentric
10 movement that strikes the trip finger on the
11 emergency trip valve." Okay, I kind of understand
12 that.
13 "This action causes a depressurization
14 of the emergency trip system hydraulic fluid and,
15 via an interface relay, the common hydraulic safety
16 system closing all stop and control valves." So,
17 your design very specifically has some sort of
18 interface relay on it. That is unusual. I haven't
19 seen many of them in mechanical trips, but you
20 specified it in your Certified Design. So, I would
21 really like to see how that works. And that's in
22 writing in your design certification, very
23 specific.
24 MR. KAUFFMAN: Okay.

1 MEMBER STETKAR: So, on one hand, you
2 are trying to stay very loose and very flexible,
3 and yet, you have very specific design requirements
4 here in writing. And I can't understand how your
5 system will work.
6 MR. KAUFFMAN: Okay.
7 MEMBER STETKAR: And I need to do that.
8 MR. KAUFFMAN: Understand. I would say
9 that we are --
10 MEMBER STETKAR: So, just keep that in
11 mind as you continue your presentation.
12 MR. KAUFFMAN: Okay. We are trying to
13 stay flexible, but we are loose.
14 MEMBER STETKAR: Well, you know, you're
15 trying to stay really loose until the points where
16 you get very, very, very specific.
17 MR. KAUFFMAN: All right. Well, let me
18 try to go through some of those specifics and see
19 if that addresses any --
20 MEMBER STETKAR: If you want to stay
21 loose, just say somebody's going to buy a turbine
22 and they have to do the analysis. Otherwise, tell
23 us how you intend it to work.
24 MR. KAUFFMAN: Okay.

1 MEMBER STETKAR: Because it is a design
2 specification.
3 MR. KAUFFMAN: All right. Well, I will
4 go through that. Thank you.
5 Regarding the turbine generator valves,
6 the approach is that both the high- and low-
7 pressure turbines have redundant in-series valves
8 such that any failure --
9 MEMBER STETKAR: Let me stop you right
10 there. There's two figures in your Certified
11 Design that show two different configurations of
12 your main steam stop valves and control valves.
13 Which configuration is the Certified Design? I
14 will give you the figure numbers, so that you can
15 reference them.
16 MR. KAUFFMAN: Right.
17 MEMBER STETKAR: One figure number is
18 figure 10.2.2-1 and one figure number is 10.1-2.
19 One of those shows something that is similar to the
20 words you have up here. The other one shows an
21 intermediate crosstie header between the stop and
22 control valves. If you do the math, one has a four
23 times higher likelihood of failing to trip the
24 turbine, given a successful turbine trip signal,

compared to the other.

So, I am curious about which principle you have in your design, because you have two figures in your Certified Design document.

MR. KAUFFMAN: Yes, I know about that inconsistency.

MEMBER STETKAR: Okay. All right.

MR. KAUFFMAN: The intent is to follow the figure that is in 10.2. I believe the figure in 10. --

MEMBER STETKAR: So, the intent is to follow -- make sure I have that on the record -- in 10.2.2-1?

MR. KAUFFMAN: Thank you.

MEMBER STETKAR: I want to make sure we have it on the record.

MR. KAUFFMAN: Correct.

MEMBER STETKAR: Okay. That's the one that has four times higher likelihood of failing to trip the turbine. That's fine, if that is your intent. I can show you the math, and that is without common-cause failures.

MR. KAUFFMAN: Okay. Thank you.

Regarding the valves, to pick up, the

in-series valves assure that any single failure in any of the steam control values to the main turbines will not prevent a turbine trip. We have functional requirements that specify the maximum shutting time for the turbine valves and the non-return valves in the extraction lines.

MEMBER SKILLMAN: Storm, on that point, the non-return valves in the extraction piping, I'm not sure that reverse-flow is widely understood. At least I have experienced kind of a deer in the headlights when I have raised that question. What set the 1-second closure time for non-return, particularly for preventing against reverse-flow?

MR. KAUFFMAN: One, it is the common practice. Two, the reverse-flow where the valves have the capability to shut that quickly. And three, preliminary analysis would show that only a small amount of steam returns during that period.

So, it is achievable. It has been sufficient in past designs and was considered a suitable criteria.

MEMBER SKILLMAN: Thank you, Storm.

MEMBER BROWN: Can I mention one other thing relative to times? I notice you had a table

with the turbine valve closure times.

MR. KAUFFMAN: Yes.

MEMBER BROWN: Of 0.3 seconds, but I went off to look to see how that was. Is that just because those are what standard designs are or is there a design, the valves that say that is suitable for tripping the turbine fast enough that it won't overspeed, regardless of what you do?

MR. KAUFFMAN: We have not yet, because we don't have an established design, done the --

MEMBER BROWN: Well, who is going to do the analysis? I mean, you have got it specified in the DCD that that is what is required for the closing time for all four sets of valves.

MR. KAUFFMAN: Correct.

MEMBER BROWN: I think it is all four sets.

MR. KAUFFMAN: Yes.

MEMBER BROWN: It is all four sets of valves?

MR. KAUFFMAN: That is the maximum shutting time.

MEMBER BROWN: Right. And I was trying to figure out where did the analysis come from to

1 say that is satisfactory based on the dynamics of
2 whatever you are doing. You have left everything
3 else up to the COL, based on the turbine generator
4 design, and you don't know what the turbine
5 generator design is. But, yet, instead of
6 specifying a time that is going to be consistent
7 with protecting it, you specify the specific time.
8 So, it seemed to be a little bit inconsistent in
9 terms of the detail there.
10 MR. KAUFFMAN: It may be overly-
11 specific. Our view is that the COL applicant will
12 need to complete the analysis showing that the
13 criteria that the NRC applies for acceptance of
14 turbine generator overspeed protection at the time
15 are met. And therefore, the .3 seconds, again, is
16 an achievable value and has worked in the past.
17 But, if for some reason it is insufficient, they
18 would have to do better.
19 MEMBER BROWN: So, you have to come
20 back to the NRC with a DCD change to make it
21 shorter?
22 MR. KAUFFMAN: No, because --
23 MEMBER BROWN: Well, it is in the DCD.
24 So, that is a design document requirement.

1 MR. KAUFFMAN: It is a design document
2 requirement, but you can be better than it without
3 having a DCD change.
4 We can come back to that.
5 MEMBER BROWN: I will bet you a vendor
6 says, if that is what you are giving from a design
7 standpoint, then it is kind of like what he has to
8 meet. Somehow he has got to set his parameters
9 when he starts the designs.
10 MR. KAUFFMAN: Correct.
11 MEMBER BROWN: That is my only concern,
12 is an inconsistency of what he starts with and what
13 he ends with. And the overspeed designer, is it
14 going to be the same guy that designs the TGs, TG
15 set himself, the way at least I used to do it when
16 we bought them?
17 MR. KAUFFMAN: Yes, the intent is,
18 well, it is up to the COL applicant. But the way
19 we have specified it is that there are overspeed
20 criteria that have to be met and there is direction
21 on specific attributes of the system to assure that
22 diversity, separation, redundancy are met.
23 CHAIRMAN BALLINGER: Go ahead.
24 MR. KAUFFMAN: Thank you.

1 MEMBER SUNSERI: I would just be
2 cautious with statements like "We can be better
3 than the DCD requirements" because, if the COL
4 applicant finds out that they have to be better to
5 meet the safety requirement or the specification,
6 then the DCD is inadequate. Then, it would have to
7 be revised to show the improved necessary
8 performance, I think. No?
9 MEMBER STETKAR: No.
10 MEMBER SUNSERI: If you have to be
11 better than what is stated to make it work --
12 MEMBER STETKAR: The DCD is the law.
13 They don't change the law. If the COL applicant
14 can't meet the criteria in the DCD, the COL
15 applicant doesn't get a COL.
16 MEMBER SUNSERI: Yes, but that is not
17 what I am saying. I am saying, if the COL
18 applicant finds that the DCD requirement is not
19 sufficient to meet performance requirements --
20 MEMBER STETKAR: That is one of the
21 reasons why we question the DCD requirements now.
22 MEMBER SUNSERI: Right.
23 MEMBER STETKAR: But the COL applicant,
24 if they can't meet the DCD requirements with

anything that they can buy, then --

MEMBER POWERS: I think the legality is that the licensee had be better than the COL required, would have an exemption. It would be part of his license, and the license is part of the regulations.

MEMBER STETKAR: But they don't go back and change the DCD. I mean, that is really onerous.

MEMBER POWERS: That is not the situation he was asking about.

MEMBER STETKAR: Oh, okay. Right.

MEMBER POWERS: The one he is asking about, they would have an exemption.

MEMBER STETKAR: Yes.

MEMBER POWERS: It would be part of their license. The license becomes part of the regulation.

MEMBER STETKAR: Right.

MR. KAUFFMAN: Thank you. Okay. Thank you.

On the one figure that Mr. Brown alluded to, I will very quickly just go through this to explain what it is intended to convey.

1 There is a normal speed turbine generator speed
2 control system that uses active speed sensors.
3 MEMBER BROWN: Excuse me. You said
4 active speed sensors as opposed to passive for the
5 TG --
6 MR. KAUFFMAN: Yes.
7 MEMBER BROWN: -- the TG control
8 system?
9 MR. KAUFFMAN: Yes.
10 MEMBER BROWN: As opposed to the,
11 quote, "passive" speed sensors?
12 MR. KAUFFMAN: Correct.
13 MEMBER BROWN: I'm trying to remember
14 whether I saw "passive" or "active" in the DCD when
15 I was reading it.
16 CHAIRMAN BALLINGER: Use your mouse.
17 MEMBER BROWN: You would use your
18 mouse? Okay. Thank you.
19 John, do you remember seeing "active"
20 or "passive" when you looked at it for the sensors?
21 I just saw independent sensors.
22 MEMBER STETKAR: I don't recall,
23 Charlie, but I'm not sure that I searched for that.
24 MR. KAUFFMAN: That is one of the

1 specifics that we have added in the --

2 MEMBER BROWN: But it is added? Then,

3 I obviously don't have a copy --

4 MR. KAUFFMAN: Correct.

5 MEMBER BROWN: -- of the new DCD --

6 MR. KAUFFMAN: Yes.

7 MEMBER BROWN: -- at this point.

8 MR. KAUFFMAN: It wasn't that we didn't

9 intend to do that. We didn't explain it

10 adequately.

11 MEMBER BROWN: Why go with active?

12 MR. KAUFFMAN: Diversity.

13 MEMBER BROWN: Have two different

14 passes after you've got diversity.

15 (Laughter.)

16 It just seems inconsistent, I'm sorry,

17 to use active sensors anywhere when they are

18 totally unnecessary when passive ones work and you

19 can get alternate designs of passive sensors if you

20 want diversity from that standpoint. That is just

21 a question.

22 MR. KAUFFMAN: I understand. I

23 understand the comment.

24 MEMBER BROWN: Thank you.

1 MR. KAUFFMAN: The active speed sensors
2 feed three normal turbine generator control system
3 controllers that do a load, two out of three, and
4 close the main turbine valves on an overspeed. In
5 addition, there are separate passive sensors that
6 are used for the electrical overspeed trip system.
7 Those feed the overspeed protection controllers as
8 a primary and backup that are a different
9 technology, which I will get to in a minute.
10 Those, then, trip the emergency trip system, which
11 I will describe on a subsequent slide. Finally,
12 the mechanical overspeed trip that Mr. Stetkar
13 described also provides an alternative means of
14 tripping all of the valves.
15 MEMBER STETKAR: Storm, go back to that
16 previous. I think a little bit of what Charlie and
17 I and Dick, and perhaps others, are asking about is
18 this level of information provides some functional
19 requirements. It shows different numbers of
20 controllers and primary and backup and mechanical.
21 And they all go into that little box there that
22 says "emergency trip system". And out comes the
23 magic thing that dumps hydraulic fluid and all the
24 valves go closed.

1 What I was questioning in my comment
2 about the specificity of an interface relay in the
3 text, and the absolute lack of any information
4 whatsoever about what is inside that box that
5 actually trips the turbine, is kind of the
6 dichotomy in the Design Certification Document
7 about level of detail. I don't know whether you
8 have redundant trip valves, whether you have
9 series, parallel. I don't know whether they fail
10 open, they fail close on loss of power. I have no
11 idea what they do.
12 And yet, in my experience, that little
13 box there is typically the most important thing
14 about failing to trip the turbine. So, if I don't
15 know what the Certified Design kind of wants
16 functionally in that box, I don't know what the
17 worth of all of that other stuff is.
18 MR. KAUFFMAN: I, again, understand the
19 comment. The approach we have taken is to impose
20 or describe functional requirements regarding what
21 is in that box and how it works.
22 MEMBER STETKAR: Okay. I hope you
23 explain those in the slides that are coming up
24 because I couldn't find them anywhere in the DCD.

1 MR. KAUFFMAN: I will attempt to do
2 that, and we can come back to your question in a
3 few slides.
4 Normal control system performs the
5 usual functions for speed and acceleration control,
6 loading, and load limits, monitoring of performance
7 of the turbine generating system, and testing of
8 the valves and controls. And also, the normal
9 control system provides an overspeed limit or
10 protection to assure that the valves are fully
11 closed at 103 percent. It uses the three active
12 speed sensors we have previously discussed and
13 applies to out of three loading and three control
14 processors. Failure of two inputs would cause a
15 trip.
16 The turbine generator overspeed
17 protection system is separate from the normal
18 turbine generator control system. The emergency
19 trip system itself has the mechanical and
20 electrical overspeed trip system as separate and
21 diverse features. The mechanical trip occurs at
22 approximately 110 percent of full speed, in which
23 rotational acceleration actuates the trip linkages.
24 And then, a manual emergency trip is also failure

1 from the front standard and the control room.
2 The electrical overspeed trip system
3 trips at 111.5 percent, approximately full speed,
4 by de-energizing master trip solenoids. It uses
5 three passive magnetic sensors. In this case we
6 also have two speed-calculating modules that do a
7 two-out-of three vote on the sensors. Those are
8 diverse technology. One module, the primary
9 module, uses software logic, and the backup module
10 is independent and uses firmware.
11 MEMBER BROWN: This is close to the
12 last slide. I am trying to recall my memory right
13 now, in that when there is a trip of the TG sets, I
14 thought there was a comment that you also get a
15 reactor trip?
16 MR. KAUFFMAN: No. The reactor trip
17 causes a turbine trip, but you don't necessarily
18 get a --
19 MEMBER BROWN: You don't get the
20 inverse?
21 MR. KAUFFMAN: Correct.
22 MEMBER SKILLMAN: Of course, it backs
23 up very quickly, the reactor coolant system,
24 because --

1 MR. KAUFFMAN: There are other reasons
2 why the reactor may trip.
3 MEMBER BROWN: But I got that inference
4 when I said that it dissipated part of the main
5 steam system; it dissipates heat from the RCS
6 following a turbine and a reactor trip. And I
7 didn't see a connection. I didn't see the forward
8 connection or the reverse connection referred to.
9 That is why I asked the question.
10 MR. KAUFFMAN: Right.
11 MEMBER BROWN: So, a trip of the TG set
12 does not cause a reactor trip?
13 MR. KAUFFMAN: Correct. But a trip of
14 the reactor causes a --
15 MEMBER BROWN: Okay. Thank you.
16 MEMBER SUNSERI: So, I saw in the SER
17 someplace the mention that there are technical
18 specifications associated with the turbine
19 generator system. And sure enough, I went and
20 looked through all the technical specifications and
21 didn't see anything. But my experience is on these
22 overspeed trip devices, both the mechanical and the
23 electrical, there are surveillance requirements to
24 make sure that these things are going to work,

since you are relying on them for protection. Any comment on why no technical specifications?

MEMBER BROWN: The specific surveillance requirements, in-service inspection and in-service testing, are intended to come out of the probabilistic evaluation, probabilistic missile evaluation. That is probably the -- well, I don't own the technical specifications. So, I can't specifically talk to those details.

MEMBER STETKAR: Storm, with regard to that, I understand that, typically, as a result of the turbine missile analysis, you derive testing intervals for the stop and control valves and the hydraulic system, you know, all the electronic goodies and all that sort of stuff. And yet, in the DCD in Section 10.2.2.3.4 on inspection and testing, it says, "The main steam stop valves, control valves, intermediate stop valves, and intercept valves are exercised at least once within quarterly intervals by closing each valve and observing the remote valve position indicator for fully closed position status."

So, in the Design Certification we now have a quarterly test interval on those valves.

1 Why does the Design Certification specify a
2 quarterly test interval on those valves? Suppose
3 that my turbine missile analysis says that I can
4 justify a six-month test interval on those valves.
5 So, what is the basis for your designed-certified
6 quarterly test interval?
7 MR. KAUFFMAN: That is a good
8 observation. We will take it under consideration.
9 MEMBER STETKAR: Thank you.
10 MEMBER RAY: Does the COL applicant not
11 have the ability to -- you talked about a turbine
12 trip causing a reactor trip, but is there no
13 ability to put in a bypass that would allow the
14 reactor to remain critical?
15 MR. KAUFFMAN: Yes. Well, I cannot
16 speak to the rest of the protection system.
17 MEMBER RAY: Well, it sounded like you
18 were saying you would get a reactor trip from a
19 turbine trip.
20 MR. KAUFFMAN: I did not mean to say
21 that.
22 MEMBER RAY: Okay. John, you wanted to
23 say something?
24 MEMBER STETKAR: I think we will hear

about that. They do have a big bypass and runback to the reactor.

MEMBER RAY: Yes. I misunderstood, then, what was being said. I thought, or maybe it was Dick who said, if you get a turbine trip, you are going to get a reactor trip. And it raised the question.

MR. KAUFFMAN: That is not intended, it is not necessarily true.

MEMBER RAY: Fine. Thanks.

MR. KAUFFMAN: This just summarizes the trips that I have already referred to.

Hydraulic control oil system, we specified that -- well, first of all, draining of the oil or relieving pressure in the hydraulic control oil system allows springs to shut the turbine steam valves and trip the turbine. A failure of any of the piping between the trip lock and the valve actuators will trip the turbine, therefore.

The drain headers are sized and independent to assure that the required valve stroke times are met. In-series valves drain to separate stainless steel headers and, then, to a

1 common drain line.

2 The hydraulic fluid in the turbine

3 generator control system is separate from that used

4 for lube oil to prevent cross-contamination that

5 might affect the reliability of the trip system.

6 And then, the non-return valves and

7 extraction lines are held open by instrument error,

8 but close as non-actuated swing check valves.

9 The next few slides talk about the

10 design principles that we discuss and provide

11 examples of how we have met them. So, we address

12 diversity, separation, testability, and ability to

13 meet single failure criteria. I will go through

14 each of these briefly.

15 Diversity, we have a mechanical

16 overspeed trip versus both the emergency electrical

17 overspeed trip and the normal turbine generator

18 control system. The electric overspeed trip and

19 the turbine generator control system use different

20 technology speed inputs.

21 Separation is provided by having the

22 emergency trip system valves in the front standard

23 away from the areas that might be affected by it,

24 main steam and other hazards.

1 Whereas, the electrical overspeed trip
2 and the turbine generator control trips are in
3 different cabinets with their own uninterruptible
4 power supplies.
5 Hydraulic control headers are separate
6 from each of the series main steam valves, each
7 side. Redundancy is provided by having series
8 valves in each of the main steam inlet lines.
9 MEMBER STETKAR: I'm sorry, you said
10 each of the electrical trips has its own
11 uninterruptible power supply? I didn't see that in
12 the Certified Design description.
13 MR. KAUFFMAN: The staff asked for
14 clarification of that.
15 MEMBER STETKAR: So, when you say "its
16 own," you mean its own? It is not an
17 uninterruptible power supply that supplies DC
18 power, non-safety-related DC power that is fed to
19 other equipment? This is its own?
20 MR. KAUFFMAN: That level of
21 specificity is not intended.
22 MEMBER STETKAR: I'm sorry, this says
23 "with its own".
24 MR. KAUFFMAN: "With its own," meaning

1 that it is not shared between the electrical -- it
2 is a failure of an uninterruptible power supply to
3 a portion of the turbine generator control does not
4 affect other portions of the turbine generator
5 control system. It does not necessarily mean that
6 it cannot be shared with other equipment.
7 MEMBER STETKAR: See, this is what we
8 are talking about, is the words make a difference.
9 And without drawings to explain the words, people
10 can interpret that a lot of different ways. So, if
11 I saw those words that I see on this slide, I
12 think, my God, I would have to have a cabinet with
13 my own little uninterruptible power supply in that
14 cabinet. And without a drawing to better elaborate
15 that -- and I'm thinking about this as a combined
16 license applicant going out for bids on something.
17 MR. KAUFFMAN: Okay. I understand the
18 comment.
19 Redundancy, I think I was in the middle
20 of this. Two out of three sensors trip the turbine
21 generator control system. Two out of three
22 different sensors trip the electrical overspeed
23 trip system. And that means that we have a total
24 of three different automatic trips plus a manual

1 trip available.

2 Independence is provided by having

3 different sensors for turbine generator control and

4 mechanical overspeed and electrical overspeed. A

5 failure of one overspeed trip system does not

6 affect the others. Failure of one valve to close

7 will not affect the others.

8 Single failure criterion is met or is

9 applied such that no single failure will cause the

10 turbine to overspeed, and that no single failure

11 will prevent an overspeed trip.

12 We have applied principle of failsafe

13 operation such that loss of power will cause a

14 turbine trip, and a failed speed sensor is removed

15 from logic, but two failed sensors in the same

16 portion of the system will initiate a trip.

17 MEMBER BROWN: Is that in both the EOT,

18 the emergency trip system, as well as the TCGS?

19 MR. KAUFFMAN: Yes.

20 MEMBER BROWN: Is there a difference in

21 detecting a failed sensor? Is there any idea how

22 you are going to protect a failed sensor in here?

23 You have got an active one and you have got a

24 passive one, two different --

1 MR. KAUFFMAN: No, we have not gone to
2 that level of detail.
3 MEMBER BROWN: Interesting. Okay.
4 MR. KAUFFMAN: Provisions are provided
5 for testability during operation for any of the
6 turbine main steam valves for overspeed sensors,
7 controllers, and trips. However, the mechanical
8 overspeed system is not testable during operation
9 to maintain the simplicity, so that there are not
10 bypasses that could inadvertently block the
11 mechanical speed trip from functioning.
12 MEMBER BROWN: Based on an earlier
13 comment you made and John's question, the
14 mechanical overspeed trip, its actuation is
15 mechanical, but I got the inference -- and I guess
16 I got this out of the reading as well -- has an
17 end-product of some electrical system; it is talked
18 about a relay context or relay actuation?
19 MR. KAUFFMAN: That is a mechanical
20 relay.
21 MEMBER BROWN: Well, I know that, but
22 what kind of, when you say "mechanical relay," what
23 do you mean, a switch that is operated by a spring
24 or is it a powered relay with electrical power?

1 Mechanical to me means mechanical.
2 MR. KAUFFMAN: It does to me, also.
3 And the term "relay" may need to be clarified, but
4 the intent is that there is no electrical component
5 to the mechanical overspeed trip.
6 MEMBER BROWN: So, it will trip the
7 turbine -- which ones are they?
8 MR. KAUFFMAN: The valves.
9 MEMBER BROWN: Yes, which ones? You
10 have got --
11 MR. KAUFFMAN: It trips all of the
12 valves.
13 MEMBER BROWN: All of them?
14 MR. KAUFFMAN: Right.
15 MEMBER BROWN: So, it sounds like it is
16 a mechanical setup that goes and does something in
17 terms of the hydraulics going to the valves.
18 MR. KAUFFMAN: Correct.
19 MEMBER BROWN: Draining to the valves.
20 MR. KAUFFMAN: Right. That is the
21 intent. Again, we don't have the detailed --
22 MEMBER BROWN: Not clear at all.
23 MR. KAUFFMAN: Okay.
24 MEMBER BROWN: Thank you.

1 CHAIRMAN BALLINGER: But, then,
2 somebody mentioned, and John brought up the fact,
3 that there is an interface relay.
4 MEMBER BROWN: That is what I was just
5 talking about.
6 MEMBER STETKAR: That is all that it
7 says; it is a block relay.
8 CHAIRMAN BALLINGER: Yes, I just looked
9 it up, yes.
10 MEMBER STETKAR: And I don't want to
11 speculate on what it is or how it works. It is
12 just, on the one hand, they are saying they don't
13 want to be very specific about the design. And
14 yet, in the text they have this thing called an
15 interface relay which, you know, we have now spent
16 probably 10 minutes about curiosity about what that
17 thing might be or whether it really is a relay or
18 whether it is some sort of other mechanical device,
19 or something or other.
20 CHAIRMAN BALLINGER: But the
21 implication is that it is mechanical.
22 MEMBER STETKAR: Well, no. The
23 implication is this is via an interface relay.
24 That is the only implication.

1 CHAIRMAN BALLINGER: Okay, but he just
2 said that it is all mechanical.
3 MEMBER STETKAR: I don't care what he
4 said. It is not in the DCD.
5 CHAIRMAN BALLINGER: Okay.
6 MEMBER STETKAR: It is an oral
7 presentation. It is not in the rule.
8 MR. KAUFFMAN: Again, understand --
9 MEMBER STETKAR: The rule right now
10 only says "via an interface relay".
11 MR. KAUFFMAN: Again, I understand the
12 comment on the clarity in the DCD.
13 MEMBER MARCH-LEUBA: Going back to the
14 failsafe, when you say the failed sensor is removed
15 from logic, do you mean that you go back to a two-
16 out-of-two logic or do you reduce half of it?
17 "Removed from logic" implies like you go two out of
18 two.
19 MR. KAUFFMAN: The DCD does not
20 specify.
21 MEMBER MARCH-LEUBA: That would be
22 really bad, right?
23 MR. KAUFFMAN: Yes.
24 MEMBER MARCH-LEUBA: It probably

1 should.

2 MEMBER BROWN: So, your intent is one

3 out of two, not two out of two?

4 MR. KAUFFMAN: No, I didn't say my

5 intent.

6 MEMBER BROWN: It does not say what it

7 doesn't say. Okay, sorry, another inconsistency;

8 that's all.

9 MR. KAUFFMAN: Okay.

10 MEMBER MARCH-LEUBA: And I think the

11 system in two out of two -- I mean, that is one of

12 the functional requirements that you can specify.

13 MR. KAUFFMAN: Yes. But, now that you

14 bring it up, I realize that it is not specified.

15 Turbine missile probability analysis is

16 required to be performed in accordance with

17 specific guidance in the DCD. It would use as-

18 built material properties, evaluate the actual

19 turbine generator control system and emergency trip

20 system design.

21 Although the orientation of the

22 turbines is favorable, we are applying a 1 times 10

23 to the minus 5th per year criterion, which would

24 normally be applicable to an unfavorable

1 orientation. So, that provides some margin.
2 We also establish the acceptability of
3 overspeed protection and in-service testing and
4 inspections via the probabilistic analysis
5 performed at the time the COL applicant selects a
6 turbine design.
7 To implement the functional
8 requirements that we have identified, there are
9 four COL items. They are to identify the turbine
10 vendor and model, identify how the functional
11 requirements in the DCD section are met, and
12 provide the detailed schematics, provide a turbine
13 missile probability analysis, and describe how it
14 conforms with the guidance in the DCD section, and
15 specify turbine rotor material properties, and
16 specifically identify any deviation from the
17 Standard Review Plan at that time.
18 MEMBER REMPE: Excuse me. Is the APR
19 1400 the first Korean plant design that load
20 follows or did the OPR also have that capability?
21 MR. KAUFFMAN: I do not know the
22 answer.
23 MEMBER REMPE: And the reason I'm
24 asking that is I am wondering if any changes were

1 implemented in the turbine generator design to
2 accommodate the ability to load follow, or is this
3 something that you -- I mean, we have been told
4 that the APR 1400 builds on existing plant designs.
5 And so, I am just wondering if the existing plants
6 load followed or if you did have to make some
7 changes to allow it to load follow. Because in the
8 Section 10 it said, hey, it has the capability to
9 load follows, and that is where the question is
10 coming from.
11 MR. KAUFFMAN: I do not know what the
12 practice on the other Korean plants are.
13 MEMBER STETKAR: Does anybody from
14 Korea Hydro and Nuclear Power know what the
15 practice is?
16 MR. OH: This is Andy Oh, KHNP
17 Washington Office.
18 Actually, in Korea all the nuclear
19 power plants have some capability for the load to
20 follow up with the turbine design. However, the
21 practicing operation does not load the power at
22 all. All the power plants and nuclear power plants
23 base load 100 percent operation. That is the
24 practice for there.

1 MEMBER REMPE: Okay. Because I'm
2 curious about that not only for today's discussion,
3 but upcoming discussions on the fuel design.
4 Thank you.
5 MEMBER RAY: Well, I just have to say
6 the practice may be base load, which is an economic
7 issue. But do they have the capability to load
8 follow is the question. And if we don't have an
9 answer, that's fine.
10 MR. OH: Yes, in terms of turbine
11 design it has some capability, but the load upon
12 load, not only for the turbine design, we also have
13 to consider for the reactor design, the fuel, and a
14 lot of things should be considered.
15 MEMBER RAY: We are very well aware of
16 that. The question is, is it? And I can only
17 infer from your answer that, no, it is not a design
18 capability of existing plants.
19 MR. OH: Andy Oh again.
20 And I can answer simply for load. For
21 the turbine design, we have some type of lid for
22 the load power, but we don't fully for the reactor
23 design and everything.
24 MEMBER REMPE: So, did you make any

1 changes? I mean, you said you had that capability
2 in prior plants, even though you didn't implement
3 it. So, I think the answer is we didn't make any
4 changes to the design.
5 MR. OH: We didn't make any changes to
6 the design for the single APR 1400.
7 MEMBER REMPE: Thank you.
8 MR. KAUFFMAN: To try and finish up
9 this section, I would just briefly summarize that
10 there are four open items regarding the Section
11 10.2. They, in general, all deal with the level of
12 detail provided that the staff is looking for more
13 information in order to complete their review. We
14 have provided a markup and some additional
15 information recently, which I believe the staff has
16 yet to complete their review.
17 I have no other comments at this time.
18 Any other questions?
19 MEMBER STETKAR: Yes, I had one. I
20 think we established that there is no reactor trip
21 from a turbine trip, but you said that there is a
22 turbine trip from a reactor trip. There are
23 statements in the DCD that says there's no safety-
24 related systems or components located in the

1 turbine building. Are the signals that come from
2 the reactor protection systems to trip the main
3 turbines safety-related signals?
4 MR. KAUFFMAN: I do not --
5 MEMBER STETKAR: Okay.
6 MR. KAUFFMAN: -- know the answer to
7 that question.
8 MEMBER STETKAR: If they are, then the
9 assertion that there's nothing safety-related in
10 the turbine building seems curious. Because if I
11 have breaks in the turbine or the piping, or
12 however those signals get from the reactor
13 protection system to -- however they interface with
14 that mystical box, could those effects have some
15 sort of feedback on the reactor protection system?
16 So, the simple statement of nothing safety-related
17 must mean that those signals are not safety-
18 related. And then, if they are, then it seems to
19 be not a correct statement.
20 MR. KAUFFMAN: All right. So --
21 MEMBER STETKAR: I would like some
22 follow-up on that.
23 MR. KAUFFMAN: I do not think we have
24 the right people here to answer your question.

1 MEMBER STETKAR: Okay. No, that's
2 fine. I just wanted to get it on the record
3 because it is a very distinct statement, and it is
4 made a few places in the DCD, that there is nothing
5 safety-related in the turbine building.
6 MR. SISK: This is Rob Sisk,
7 Westinghouse.
8 I do want to go back to the question on
9 load follow, because there was some discussion on
10 that. I want to separate the idea of capabilities
11 versus what it is being licensed for or what
12 certification is being requested.
13 Load follow is not part of the
14 certification application capability or licensed
15 for the claim. We are not asking right now --
16 MEMBER STETKAR: Are you on (referring
17 to microphone)?
18 MR. SISK: Oh, I thought I pushed the
19 button.
20 (Laughter.)
21 Yes, we are not -- part of the
22 certification is not asking to approve load
23 following in the U.S.
24 MEMBER REMPE: So, when we look at the

1 section on fuel, I will keep this statement in
2 mind, right? Thank you.
3 MEMBER SKILLMAN: Rob, it appears as
4 though, with the amount of energy dump that is
5 available from your turbine bypass valves, 55
6 percent, there has been an intention to enable to
7 this plant to run back from very high power levels.
8 And hence, that appears to be your leading
9 indicator of load following.
10 MR. SISK: The capability is there. I
11 think that is what everybody is saying.
12 MEMBER STETKAR: Well, but the
13 capability, let's be clear, the Certified Design is
14 being certified with the ability to handle a
15 complete load rejection without a reactor trip and
16 turbine trip. Is that correct?
17 MR. SISK: That is correct.
18 MEMBER STETKAR: And that is the
19 Certified Design?
20 MR. SISK: That is correct.
21 MEMBER STETKAR: And that is not a load
22 follow. That is --
23 MR. SISK: That is correct. That is
24 not a load follow, though.

1 MEMBER STETKAR: Okay.
2 MEMBER RAY: That is not load
3 following. That is trying to keep the reactor --
4 MEMBER STETKAR: That is understanding
5 the basis for the turbine bypass valve
6 capabilities, right?
7 MR. SISK: Right. I just wanted to
8 make that distinction, so we didn't confuse --
9 maybe I didn't do it well. You did it much better,
10 John. We didn't want to confuse that with the idea
11 of load -- you said you are following it on fuel.
12 MEMBER STETKAR: Yes, the fuel, load
13 follow fuel issues are different than --
14 MR. SISK: Yes.
15 MEMBER STETKAR: -- being able to
16 handle 100-percent load rejection without turbine
17 trip or without reactor trip anyway.
18 MR. SISK: Exactly. Thank you. I just
19 wanted to clarify that.
20 CHAIRMAN BALLINGER: But somewhere in
21 the DCD, either in Tier 1 or Tier 2, there is a
22 discussion about a load following, a control rod
23 movement automatically, and things like that. So,
24 there is a pretty detailed discussion, yes.

1 MEMBER REMPE: The high-level summary
2 document, it mentions that, and I can find the
3 statement. But, yes, it is something that we need
4 to make sure we understand because it was mentioned
5 that way; you could do this for load following.
6 MR. SISK: Anticipations for the
7 future.
8 MEMBER REMPE: Yes.
9 MEMBER RAY: But hold on. The
10 anticipation for the future, that is not an answer
11 to the question. You know, it either is or it
12 isn't.
13 MR. SISK: For the certification being
14 sought right now, it is not reviewing and approving
15 the design for load follow capability.
16 MEMBER RAY: Yes, I thought that's what
17 you meant. It is just the anticipation comment you
18 made --
19 MR. SISK: Okay.
20 MEMBER RAY: -- made it sound
21 confusing.
22 MR. SISK: My mistake then. I didn't
23 mean to cause confusion. It is just things can
24 change in the future, but the certification --

1 MEMBER RAY: Well, yes, obviously, they
2 can. All right.
3 MR. SEO: I will explain domains
4 consistent in terms up to the turbine stop valves
5 and consistent with safety-related drivers and the
6 So, the figure shows the major
7 components that remain consistent, that a first
8 steam generator over APR 1400, it just steams and
9 it has a two main steam lines to the main steam
10 header. Each main steam line has one MSADB and
11 five MSSV and one MSIV, one MSIV driver from the
12 steam header to the turbine that pull the main
13 steam stop levers. And the main steam header
14 condenser, there are eight steam bypass drivers.
15 The main steam system is designed to
16 deliver the steam from the steam generator to the
17 turbine generator, dissipate heat and it handles it
18 when the main condenser is not available by using
19 the mSADB.
20 Provides the steam to the feedwater
21 pump turbine, auxiliary feedwater pump turbines,
22 the second stage reheater of the MSR, turbine steam
23 seal system, and the auxiliary steam system.
24 Also, this system provides adequate

1 overpressure protection for the steam generator and
2 the MSS by using the main steam safety valves.
3 The main steam system is designed in
4 the following term: main steam piping in the
5 safety-related portion are designed in accordance
6 with the requirement of ASME Section III, Class 2
7 and 3. The remaining steam piping, in accordance
8 with the ANSI/ASME, are B31.1.
9 FAC, flow accelerated corrosion-
10 resistant materials are used for the FAC-
11 susceptible piping.
12 The additional pipe thickness is
13 applied for the carbon steel piping in
14 consideration of the 40 years of design life.
15 MEMBER SKILLMAN: Could we talk about
16 40 years --
17 MR. SEO: Yes.
18 MEMBER SKILLMAN: -- for a minute,
19 please?
20 The certification is for a 60-year
21 design, and it is clear in your documentation that
22 the Section 1 systems, Class 1 systems, are 60
23 years. But the systems that are not Class 1 are
24 designed for 40 years. And that seems to be a

1 major change. Why is part of the NSSS or the
2 island designed for 60 years and part of it
3 designed for 40 years?
4 MR. SEO: I understand. APR 1400 in
5 Korea was considered 60 years, one reactor and
6 reactor pressure, and so on. However, some
7 components were replaced during the plant
8 operation. In that case, those components are
9 considered the 40-year design life because some
10 components can be replaced or have some required
11 replacement.
12 MEMBER SKILLMAN: This seems peculiar
13 because in your Tier 2 documentation and the DCD,
14 at Section 1.2.1.1.2, your performance design
15 objective communicates 60 years without the need
16 for extended refurbishment. It would seem changing
17 out secondary site piping, piping that is
18 susceptible to FAC, would be an extended
19 refurbishment. So, it seems as though you have got
20 guidance for 60 years in your Design Control
21 Document. Yet, you are advertising at least some
22 systems are designed only for 40 years.
23 So, I would just like that on the
24 record, but that seems inappropriate. It would

1 seem that the entire machine should be designed for
2 60 years.
3 CHAIRMAN BALLINGER: Moreover, there is
4 a detailed discussion of the FAC evaluation margins
5 and things like that, and a comparison with an
6 earlier Korean design, the 1,000-megawatt version.
7 And near as I can tell, if you extend that analysis
8 from 40 to 60 years, you don't meet the FAC -- you
9 don't have any margin.
10 So, I'm curious as to how that works.
11 What I am saying is that the FAC design was okayed
12 and the staff eventually agreed for 40 years. But,
13 if you apply the same, extrapolate the rates, and
14 stuff like that, for the 60 years, you find out
15 that you can't meet 60 years with the FAC design.
16 So, there are some specific questions I have, but I
17 guess there is a specific discussion of the FAC
18 system. So, we can wait for that.
19 MEMBER SKILLMAN: Well, the
20 documentation that Dr. Ballinger is referring to is
21 Tier 2, Chapter 10.3.6.3. That is on page 10.3-26
22 and 27 in the Design Control Document.
23 And this again points to 60-year life
24 for the plant, except 40 years for certain systems,

1 and particularly systems that are susceptible to
2 flow accelerated corrosion. So, it seems that this
3 difference needs to be well-explained.
4 MR. HWANG: Yes. Okay, I will answer.
5 CHAIRMAN BALLINGER: Give your name.
6 MR. HWANG: Yes, my name is Hwang
7 Kyeong Mo. I work with KEPCO.
8 I will answer so you will get a
9 picture. As previously Mr. Seo mentioned, the
10 secondary site piping and component is a
11 changeover. However, when I calculate the
12 corrosion allowance, I can see that it is 60 years.
13 However, just I describe in the DCD for the 40
14 years of design. I consider 60 years for corrosion
15 allowance. The corrosion allowance of 60 years and
16 40 years, they are similar. If you want, I can
17 show you my material after this discussion.
18 CHAIRMAN BALLINGER: Okay.
19 MR. HWANG: Yes.
20 CHAIRMAN BALLINGER: Okay. Thank you.
21 Yes. Because I understand that there is a
22 leveling-off, which means the implication is that
23 there is not much of a difference. But I am not
24 sure. I would like to see that.

1 MR. SEO: This slide shows the open
2 items. There are three open items for this Chapter
3 10.3. Open item 10.3-1 is to provide the
4 tabulation and the descriptive text of all flow
5 paths between MSIVs and the turbine stop valves.
6 This issue is related to the RAI 4570, Question
7 10.03-5. This question was responded with a new
8 table, including information required for the main
9 steam tests, that branch of the main steam lines.
10 This slide, open item 10.3-2, is to
11 provide how the site piping with a Seismic Category
12 2 classification. This section on piping can
13 perform its safety-related function of the
14 discharging steam to the atmosphere during a
15 seismic event.
16 This is related to RAI 8570, Question
17 10.03-4. This question was also responded on June
18 this year. The response was described while
19 performing the safety-related function of the
20 discharged steam to the atmosphere with the seismic
21 classification during a seismic event.
22 Also, it demonstrated the ability of
23 the main steam valve house structures to adequately
24 handle the discharged steam from MSADVs and MSSVs

during a seismic accident. The compartment accident pressure due to the main steam line break is considered for the main steam turbine house's structure design, as stated in DCD Subsection 3.8.4.3.2.

This slide on 10.3-3 is related to the list of items to be incorporated into the operating and the maintenance procedures, consistent with NUREG-0927. This is related to the RAI 8575 or Question 10.3-6. This question was also responded on June of this year. The response included the items to be incorporated into the operating and maintenance procedures necessary to address the steam hammer specified in NUREG-0927.

MEMBER STETKAR: Before we get to flow accelerated corrosion, I have a few questions on what we just discussed. The first one is that the main steam isolation valves are safety-related and they are certainly within the scope of the Certified Design. And yet, I cannot find any drawing that will tell me the design principle that shows how those valves are closed hydraulically.

In particular, I find drawings that show how the pilot-operated safety-relief valves on

1 the pressurizer are closed. I understand how they
2 work. But I do not understand how the main steam
3 isolation valves work. I need to understand that.
4 I don't know how many solenoids there
5 are. I don't know whether they are series or
6 parallel. I don't know whether they are designed
7 to fail open or closed. I have no idea how they
8 work. So, I can't understand how those valves work
9 without that information. I will just put that on
10 the record.
11 MR. SEO: The main steam isolation
12 valve is installed, its main steam lines. The main
13 steam isolation valve is electric hydro-type.
14 Therefore, this MSIV has a power electric or now
15 power pairs. At the case this MSIV will be closed.
16 MEMBER STETKAR: I understand those
17 very high-level discussions. I don't understand
18 how it works.
19 And this is something where it is part
20 of the Certified Design and it is a very safety-
21 related piece of equipment. So, there ought to be
22 clear specification in terms of power supplies to
23 solenoids, series/parallel configurations of those
24 solenoids. And that information typically is

1 supplied in Certified Designs.

2 The main steam atmosphere dump valves

3 in Section 10.3.2.2.4 -- and I only give the

4 specificity so that you can go look it up later --

5 it says, in table 10.3.2-1 -- I understand what the

6 steam relief capacity is of each MSADV as 1.1 times

7 10 to the 6th pounds per hour. Forgive me for

8 using English units. But in the table this further

9 indicates that there is a controllable capacity per

10 valve of 63,000 pounds per hour, much, much less

11 than the total relief capacity.

12 What is that controllable capacity?

13 What is the intent of that? Is that the amount if

14 I am trying to manually control the valve, the

15 maximum amount of steam relief? Or what is it? I

16 don't understand what is meant by the controllable

17 capacity per valve. That is very important if

18 there is some limitation on how I can use those

19 valves to perform what I call an active cooldown.

20 MR. SEO: Yes. The function of an

21 MSADV is to remove the decay heat from the

22 secondary site or incinerator during the hot

23 standby to shutdown the cooling system accident

24 condition. Therefore, the incinerator pressure

1 will be decreased from the hot standby condition to
2 shutdown the cooling system. Therefore, the
3 incinerator, the pressure is decreased. However,
4 the atmospheric pressure is the same. I think it
5 is the different pressure between the secondary
6 site to the atmosphere. Therefore, the rating
7 capacity will be changed due to the pressure.
8 MEMBER STETKAR: I understand that.
9 That is just physics if the valve is completely
10 open. I get that. What I am asking about is, what
11 do you mean by the controllable capacity of the
12 valve?
13 MR. SEO: The controllable capacity,
14 yes, I understand the controllable capacity is
15 provided and rests with the designer. However, as
16 far as I know, the controllable capacity of an
17 MSADV is during the removal of heat decay without
18 pure, only RCP operation.
19 In this time condensers are not
20 available. I think it is they remove the heat,
21 produced the RCP operation, have to remove them to
22 atmosphere. In that case, the heat can be removed
23 by MSADV.
24 MEMBER MARCH-LEUBA: So, you are trying

1 to control the pressure of the secondary with that
2 valve? During shutdown conditions and decay heat,
3 you want to control the pressure of the secondary
4 with the MSADV?
5 MR. SEO: Shutdown condition?
6 MEMBER MARCH-LEUBA: Yes.
7 MR. SEO: MSADV only controls until
8 shutdown cooling system ancillary condition. After
9 the shutdown cooling ancillary condition, decay
10 heat from the steam generator the secondary side
11 will be removed, the shutdown cooling system, not
12 the main steam system.
13 MEMBER STETKAR: Let's just put this on
14 the record and get back to us on this. I
15 understand that one of the functional requirements
16 from the MSADVs is to remove steam while the MSIVs
17 are shut or the turbine stop valves are shut, while
18 we are heating up the primary system on the reactor
19 coolant pumps. Great. I got that. They have got
20 to relieve steam somewhere.
21 I am curious about there is a specific
22 line item in a table in the Design Certification
23 Document that says the MSADVs have a controllable
24 capacity per valve of 63,000 pounds mass per hour,

1 and I don't know what that means. I don't. If I
2 am going to build the thing, I don't know what that
3 means in terms of how I'm supposed to design the
4 control systems.
5 MR. SISK: I understand. This is Rob
6 Sisk, Westinghouse.
7 We have captured the comment and we
8 will be --
9 MEMBER STETKAR: Yes. Thanks. I just
10 wanted to get that on the record.
11 MR. SISK: Thank you.
12 MEMBER STETKAR: Now, also, in the
13 description of the atmospheric dump valves -- and
14 again, I will point you to Section 10.3.2.2.4 -- it
15 says each MSADV can be operated manually with a
16 hand wheel in the event of total loss of power.
17 Where are those hand wheels located? Are they
18 inside the main steam valve house? And if they
19 are, are they accessible and operable during
20 conditions when personnel would need to go stand
21 there and turn those hand wheels?
22 MR. OH: This is Andy Oh, KHNP,
23 Washington Office.
24 The hand wheel is kept inside of MSADV,

1 the valve box.

2 MEMBER STETKAR: Inside the valve box?

3 Okay.

4 MR. OH: Yes.

5 MEMBER STETKAR: So, I, as an operator,

6 need to go stand there and manually control this

7 thing while we are dumping a lot of steam. Is it

8 pretty hot in there?

9 MR. OH: It is not very pretty hot.

10 MEMBER STETKAR: It's not?

11 MR. OH: In the valve room, actually,

12 all the valves are insulated, so the condition for

13 the valve room is the operator can access that

14 valve and do some -- they are using tools and --

15 MEMBER STETKAR: Do you have any

16 experience doing that?

17 MR. OH: Yes, the operators in Korea as

18 a regular basis do some practice for that.

19 MEMBER STETKAR: Good. Thank you.

20 That helps.

21 We had a valve room in our plant that

22 you could live in it for a while before you became

23 Louis the Lobster. Louis the Lobster is my analogy

24 for somebody who is roughly boiled alive.

1 Perhaps you have better insulation and
2 better access. But I am glad to hear that you
3 actually have experience. That helps me a lot.
4 CHAIRMAN BALLINGER: Can anybody hear
5 after operating that valve?
6 MEMBER STETKAR: Yes, yes, your ear
7 protection is a lot better than Louis the Lobster
8 protection.
9 (Laughter.)
10 MR. SEO: Let me provide additional
11 information for MSADV. MSADV is located in the
12 main steam valve house. The main steam valve house
13 can be controlled by an HVAC system. Therefore --
14 MEMBER STETKAR: Yes, I was careful to
15 say during the scenarios when I need to do this.
16 Typically, during those scenarios I may not have
17 that HVAC system. If I had it, I might have
18 electric power and I might be able to operate those
19 valves remotely. So, I'm thinking about what types
20 of conditions in the plant would actually require
21 someone to go there and stay there and control that
22 valve locally. And those types conditions I
23 suspect you may not have ventilation for that valve
24 house, if you look at a risk assessment, for

1 example, the scenarios that would require local
2 operation.
3 I had one last question, and we didn't
4 talk about the turbine bypass valves. There's a
5 statement in Section 10.4.4.3. And before I get to
6 that statement, I understand that the total turbine
7 bypass capacity is 55 percent of the full-rated
8 steam flow or full power. I also understand you
9 have eight turbine bypass valves. And in table
10 10.3.2-1 -- let me make sure I have my references
11 correct here.
12 I'm sorry. In Section 10.4.4.2.2.1, it
13 says, "No single turbine bypass valve has a maximum
14 capacity greater than 9.07 times 10 to the 5th
15 kilograms per hour," which is 2 times 10 to the 6th
16 pounds per hour, "at normal full-power steam
17 generator pressure."
18 Then, in Section 10.4.4.3, it says, "In
19 the unlikely event that one of the TBVs opens
20 inadvertently, the maximum steam flow through one
21 valve at full-load main steam pressure is less than
22 the maximum permissible flow to limit a reactor
23 transient."
24 When I read that, I don't understand

1 what those words mean. So, if I take the maximum
2 flow through one valve of about 2 million pounds
3 per hour, that is about 11 percent of full-rated
4 steam flow. And if one of those valves opens, in
5 this design there are no automatic isolation valves
6 on the turbine bypass valves, at least none shown
7 in any drawings I could find.
8 So, that says that I am going to
9 increase steam flow by about 11 percent. What does
10 this statement that that steam flow increase is
11 less than the maximum permissible flow to limit a
12 reactor transient, what does that mean? Don't I
13 get a reactor trip on high power under those
14 conditions if I start from 100-percent power and
15 increase it to 111-percent power, or not?
16 I will just put that on the record
17 because I found that statement curious and I didn't
18 know what it meant.
19 MR. SEO: I'm sorry, I don't answer --
20 MEMBER MARCH-LEUBA: I am not designing
21 it, but opening the valve reduces the pressure.
22 That does not increase the power. That is the
23 answer you should have given.
24 MEMBER SKILLMAN: I have experience of

1 this event, and power increases rapidly due to
2 moderator temperature coefficients. That is what
3 happened in my plant.
4 MEMBER STETKAR: You go out on
5 overpower to beyond where your high nuclear power
6 trip setpoints are.
7 MEMBER SKILLMAN: I would like to ask
8 about this 55-percent steam dump capability on your
9 condenser. Two things. What provision do you have
10 to protect your tubes at that very high steam flow
11 rate, because that is relatively-high steam? And
12 second of all, how do you protect the condenser
13 boot that is the sealant between the condenser
14 shell and the low-pressure turbine when you
15 initiate this massive steam dump?
16 MR. SEO: In the APR 1400 design, it
17 has an energy-dispersion device outside of the
18 steam, the steam pipe, just the line downstream of
19 the steam bypass turbine. Therefore, in an energy-
20 dispersion device, it will be hard to maintain the
21 turbine integrity. And then, the turbine condenser
22 manufacturer also considered the location of the
23 turbine bypass, based on the heat exchange in the
24 designs. Therefore, in our experience, in Korea

1 experience of the OPR-1000 and APR 1400, there are
2 no adverse impacts due to the steam bypass line to
3 the condenser tube.
4 MEMBER SKILLMAN: Thank you.
5 MR. SEO: The condenser tube design is
6 considered. However, two loads has a thickness.
7 Tubes are used to prevent damage of our tube by
8 steam. That is our practice for designing a
9 condenser.
10 MEMBER SKILLMAN: Thank you.
11 MEMBER REMPE: I'm sorry to bring this
12 up again, but I am a little curious about this load
13 following and that you are not asking to have the
14 load following be part of the Design Certification,
15 because it is discussed in this Section 10. It is
16 discussed in Section 4. There is a section about
17 load following characteristics. The staff's draft
18 SE talks about the term generator; it is designed
19 for load following capabilities.
20 Where is it said explicitly, even
21 though we have all this description about the fuel,
22 the load following, and the turbine generator can
23 do load following, that it says, "But we don't want
24 to be approved for load following."? And where

1 does the staff say, "No, we are not reviewing this
2 stuff," even though it says it does that. I mean,
3 I don't get how somebody knows that this approval
4 will not be for load following.
5 MR. SISK: Rob Sisk, Westinghouse,
6 again, to support KHNP.
7 But load following, core operations is
8 going be a COL issue. How they manage the load or
9 the core will be a COL item.
10 What we are talking about today in the
11 design is load rejection capabilities and what the
12 plant design is capable of. And we have heard that
13 there is a lot of capability in this plant. They
14 have a lot of flexibility going forward. But we
15 are not today talking about a load following
16 program.
17 MEMBER REMPE: Okay, but the staff, I
18 mean their response back doesn't say -- it says
19 that the turbine generator has the capability to
20 load follow. Did they review that explicitly and
21 say, "Oh, yeah, it can do it."?
22 MR. SISK: I would defer to the staff
23 on that.
24 MEMBER REMPE: Okay. We will be asking

1 that question. Because, I mean, I think somewhere
2 that it kind of gives a false impression that the
3 NRC staff is reviewing it and that you have
4 submitted information for that capability.
5 MR. SISK: For the capability.
6 MEMBER REMPE: Okay, and they have
7 reviewed that capability?
8 MR. SISK: I have no idea. I defer to
9 the staff.
10 MEMBER REMPE: Okay. Thank you.
11 MR. OH: This is Andy Oh, KHNP
12 Washington Office, again.
13 And that issue is asked by the RAI
14 question for 297-8332. So, we clarified that the
15 APR 1400 will be operated as base load plants in
16 Section 4.4.3.3.4. We addressed that.
17 MEMBER REMPE: In Section 4, but in
18 Section 10 was that also asked? Was that also
19 asked in Chapter 10 also? Did the staff have an
20 RAI on it in Chapter 10 also?
21 MR. OH: No. It is only asked by the
22 Chapter 4.
23 MEMBER REMPE: Okay. Thank you.
24 MR. HWANG: Good morning, everyone. My

1 name is Hwang Kyeong Mo for KEPCO E&C. My
2 experience of flow accelerated corrosion is about
3 25 years.
4 Today I present open items which is
5 already the flow accelerated corrosion. The first
6 open item was issued May 24th of this year. We
7 responded several days ago.
8 The first description of the issue is
9 right at this sentence. The NRC staff requested to
10 revise the whole 10.3(3), right? I agree with the
11 opinion. So, I have changed COL item 10.3(3). All
12 right. This sentence, "The program shall
13 incorporate the (real) condition of 10 CFR
14 50.55(a)(b)(5) on ASME Code Case N-597, Revision 2.
15 The second open item, the description
16 of the issue is right in this sentence. NRC staff
17 also requests to revise the COL item 10.3(3). I
18 also agree with the opinion. So, I have revised
19 the COL item like this. "The COL applicant is to
20 provide a description of the flow accelerated
21 corrosion monitoring program. The description is
22 to address consistency with Reg Guide 89-08 and
23 NSAC-202L, Revision 3, and provide a milestone
24 schedule for implementation of the program."

1 CHAIRMAN BALLINGER: As long as we are
2 going in I guess numerical order for the RAIs, this
3 may have been resolved, but there is an RAI
4 question 10.03.06-5 and 7 where they are talking
5 about the extraction steam lines using a so-called
6 weathering steel. That is ASTM 8588, Grade C.
7 MR. HWANG: Yes.
8 CHAIRMAN BALLINGER: Well, first, there
9 is no Grade C in the current specification for 588.
10 There is an A, B, and K. Those grades are all what
11 are called COR-TEN steel, which gets their
12 corrosion resistance from the addition of copper.
13 And so, there is .5 or so percent copper, in
14 addition to the chromium. And copper in the
15 secondary system is a bad thing.
16 MR. HWANG: I know. Yes, I know. Yes.
17 CHAIRMAN BALLINGER: So, I am curious.
18 I don't see that that was resolved, but, obviously,
19 you are up to 10.03-6-25. What is going to happen
20 with respect to this weathering steel use? It just
21 seems to me just out of place.
22 MR. HWANG: You mentioned A588
23 material.
24 CHAIRMAN BALLINGER: Right.

1 MR. HWANG: Yes, which is related to
2 the turbine generator system. So, I did not
3 describe in this 10.03-6. So, I don't know what
4 the material related to A588 describes as COL
5 items. Could you explain the A588 material? Yes,
6 the material is not related to this section. So, I
7 turn over the answer.
8 CHAIRMAN BALLINGER: Okay. I guess I'm
9 still not understanding. Is that material going to
10 be used in the extraction lines? That is the
11 question.
12 MR. HWANG: Extraction lines?
13 CHAIRMAN BALLINGER: Yes, the steam
14 extraction lines are constructed from ASTM A588
15 Grade C.
16 MR. HWANG: A588?
17 CHAIRMAN BALLINGER: A588 Grade C.
18 Well, first, there is no Grade C in that
19 specification, the latest one. There might have
20 been one in an earlier one. But those
21 specifications are for weathering steel, and the
22 weathering steel adds copper and in some cases
23 phosphorous, but copper to achieve corrosion
24 resistance.

1 MR. HWANG: I guess there are some
2 mixtures. I understand that the steam extraction
3 lines do not -- are not made of copper material.
4 CHAIRMAN BALLINGER: Okay. I'm sure
5 they are not copper.
6 MR. HWANG: Yes.
7 CHAIRMAN BALLINGER: But the alloy that
8 you are using contains copper. Okay? And over a
9 long enough period of time, with flow-assisted
10 corrosion and general corrosion, that copper would
11 likely end up in the steam generator, some of it.
12 And when it gets in the steam generator,
13 historically, when there is copper in the steam
14 generator and you have sludge and things, it
15 becomes pretty tough to remove. And so,
16 historically, copper has been removed entirely from
17 the secondary system.
18 MR. HWANG: If we want, I answer
19 after --
20 MR. SISK: Yes. No, no, no.
21 We have captured the comment and we
22 will be looking into that. Once we have had an
23 opportunity --
24 CHAIRMAN BALLINGER: Yes, but it was in

1 an RAI, and that is not one of the open items. But
2 it says this addition is being tracked as a
3 confirmatory item.
4 MR. SISK: We need to go back and take
5 a look to see what the status of that is. I don't
6 have it in front, but we are going to take a look
7 at that.
8 CHAIRMAN BALLINGER: Thank you.
9 MR. SISK: Thank you.
10 MR. HWANG: Okay, I will continue my
11 presentation, yes.
12 The third description of the issue is
13 right at this sentence. The staff noted a
14 configuration of chrome-molybdenum steel to chrome-
15 molybdenum steel in the downcomer line. This
16 configuration is more susceptible to flow
17 accelerated corrosion, as discussed in NSAC-202L,
18 Revision 3.
19 My answer is like this sentence. In
20 OPR 1000 design, chrome-moly steel is utilized
21 between the main feedwater control valve and the
22 main steam air valve house, right, which contains
23 sharp bending portions susceptible to flow
24 accelerated corrosion, as shown in figure 1.

1 Figure 1 and 2 I will show you on the next slide.
2 In the APR 1400 design, carbon steel is
3 utilized between the main fuel control valve and
4 the main steam valve house, right, which does not
5 have sharp bending portions, as shown in figure 2.
6 This slide shows figure 1, 2, 3. As you can see,
7 this figure 1 in OPR 1000 design, there is a sharp
8 bending portion, as you can see in this figure.
9 So, the rule I raised here was installed. On the
10 other hand, in APR 1400 design, there are no sharp
11 bending portions. So, we have changed the material
12 to carbon steel.
13 Figure 3 shows the three-dimensional
14 configuration between OPR 1000 and APR 1400 design.
15 This slide shows the material comparison between
16 OPR 1000 and APR 1400. As you can see with this
17 figure, these portions that were installed with
18 roll that are still in post-design, OPR 1000 and
19 APR 1400. On the other hand, this portion between
20 the main feedwater control valve to the main steam
21 valve house were installed with roll in just the
22 OPR 1000 design.
23 I will continue my answers. The carbon
24 steel portion of the downcomer feedwater line

1 between the chrome-moly steel portions are not
2 subject to augmented in-service inspection. ISI is
3 performed to evaluate the weld degradation on the
4 area of the area of weld.
5 Also, you can see the UT thickness
6 inspection is performed to evaluate the component
7 wear beyond the toe of the weld. Initial wall
8 thickness is taken in components placed downstream
9 of the main fuel control valve and will be
10 inspected periodically during plant operation.
11 This slide shows the pre-service
12 measured thickness for flow corrosion management.
13 In this figure, the U/S extension means the
14 upstream pipeline of this. This is the main
15 feedwater control valves. And D/S extension means
16 the downstream pipeline of this.
17 The fourth description of the issue is
18 like this. Requests the further information on why
19 the economizer line did not require FAC-resistant
20 material, considering that flow is similar to the
21 downcomer line.
22 So, my answer is like this. The answer
23 can be referred to Question 26. Both the downcomer
24 and the economizer lines are installed with carbon

1 steel. Accordingly, the FAC susceptibility
2 comparison is not necessary between the two lines.
3 I skip the next sentence.
4 The final description of the issue is
5 like this. First, if the removal of fittings,
6 valves, and flanges from tables 2, 3, 4 is intended
7 to provide a justification for the removal of these
8 components from the tables and, as necessary,
9 identify where the materials of construction for
10 these components will be documented in the FSAR.
11 My answer is like this sentence. FAC
12 inspections are normally carried out using UT
13 thickness measurements. For castings of valves and
14 flanges it is often quite difficult to quantify
15 wear as surfaces are non-parallel and, thus, the UT
16 thickness measurements are not used in this case.
17 So, visual inspections are more
18 commonly used if wear is localized on valves and
19 flanges. Therefore, material and size for valves
20 and flanges have been excluded in tables 2, 3, and
21 4. Also, vendor design portions has been excluded
22 in table 2, 3, 4, which are irrelevant to FSAR
23 10.3.6.
24 This next description of the issue is

1 like this: provide an explanation of the proposed
2 changes in pipe size documented in applicant's RAI,
3 response dated January 11th, 2016.
4 I skip our next slide because it was
5 our mistake. So, we changed the table like this.
6 For example, pipe size 30 and 34 inches was
7 omitted. It was our mistake. Also, indeed, there
8 is no impact onto the other -- the table changes,
9 it is no impact onto the other document because in
10 the design we referred to the design document, such
11 as P&ID and isometric drawing piping design tables.
12 End of my presentation. Thank you for
13 your attention.
14 CHAIRMAN BALLINGER: I have just a
15 comment. Going back to slide 30, you are using the
16 NSAC-202-L-R3. There is an R4.
17 MR. HWANG: Yes, I know.
18 CHAIRMAN BALLINGER: Okay. So, which
19 one are you going to use?
20 MR. HWANG: In the document or Reg
21 Guide 1406, 26, that document I cannot exactly
22 remember. However, that Reg Guide describes
23 NSAC-230, Revision 2. However, during maintenance
24 of Korea Nuclear Power Plant, the secondary site

1 piping, we used the Reg Guide Revision 4, yes.
2 Reg Guide 1.26 describes Reg Guide
3 Revision 2. However, when I describe this
4 document, I used the Reg Guide Revision 3.
5 CHAIRMAN BALLINGER: Three?
6 MR. HWANG: Yes.
7 CHAIRMAN BALLINGER: But, again, there
8 is a later revision, 4.
9 MR. HWANG: Yes, a later revision. I
10 know Reg Guide Revision 4. No, no. NSAC Revision
11 4 was open.
12 MR. SISK: Rob Sisk.
13 Relative to the Certified Design, there
14 are times -- and I would have to check the date on
15 these -- but we followed the requirements or the
16 guidelines, I should say, that are in place six
17 months prior to the application. So, I would want
18 to go back and check the date to see when Rev. 4
19 was released, but right now we're following Rev. 3.
20 CHAIRMAN BALLINGER: Yes, I could get
21 Rev. 3, but Rev. 4 is EPRI proprietary and I
22 couldn't get it.
23 MR. SISK: Understand, but, again, it
24 depends. I would have to go look to see the date

1 on the revision applicability.

2 CHAIRMAN BALLINGER: It just makes

3 sense, then, if Rev. 4 is a significant change,

4 that it would be incorporated.

5 MR. SISK: I will say, generally

6 speaking, I know where that sometimes makes sense.

7 CHAIRMAN BALLINGER: Yes.

8 MR. SISK: But in the certification

9 world we have to submit the design as of a period

10 of time.

11 CHAIRMAN BALLINGER: Right.

12 MR. SISK: And trying to keep current

13 is a challenge.

14 CHAIRMAN BALLINGER: Right.

15 MR. SISK: I would like to take this

16 opportunity, too, to just clarify one other point

17 that came up during this session before we change

18 over. The question on A588 --

19 CHAIRMAN BALLINGER: Yes.

20 MR. SISK: -- and the RAI 10.03.06,

21 Question 5 and 7, we just did a quick check on

22 that. A588 has been removed. It is not being

23 used.

24 CHAIRMAN BALLINGER: Oh, okay.

1 MR. SISK: Okay? So, just to be clear,
2 I wanted to go back and confirm that. But in the
3 revised RAI that you may not have seen yet we have
4 removed A588.
5 CHAIRMAN BALLINGER: Okay. Thank you.
6 MR. SISK: And that is why it is
7 confirmatory.
8 CHAIRMAN BALLINGER: Okay. I have been
9 reminded by the green button police that it is
10 probably appropriate now to take a break, if this
11 is convenient.
12 MEMBER STETKAR: Before we do that,
13 though, there was a reason why I wanted to mention
14 this. I noticed that we seemed to be in this
15 briefing skipping Sections 10.4.1 through 10.4.7 of
16 the DCD, because we are picking up now with 10.4.8,
17 10.4.9, and 10.4.10. And I was curious why we are
18 not being briefed on those other sections, because
19 I read them and I have questions on those sections.
20 MEMBER SKILLMAN: I do, too.
21 MEMBER STETKAR: So, how do we get
22 those questions on the record, despite the fact
23 that -- let me say, we are going to get those
24 questions on the record, despite the fact that,

1 apparently, there was no plan to brief us on those.
2 When do you want to do that?
3 And I'm curious why there was no
4 briefing whatsoever on things like the main
5 feedwater system.
6 MEMBER SKILLMAN: And the condensate
7 polishing.
8 MEMBER STETKAR: And the condensate
9 polishing.
10 MR. SEO: Let me provide the answer for
11 your question. During the beginning of my
12 presentation I mentioned that today the
13 presentation is only considered with the open
14 items. However, 10.4.1, main condenser were steam
15 bypass system or condensate feedwater system, does
16 not have open items by staff. Therefore, we do not
17 prepare --
18 MEMBER STETKAR: You will find for
19 future reference that the ACRS reviews everything.
20 We do not care about open items or non-open items.
21 We review everything. So, we would appreciate in
22 the future presentations on every section of the
23 Certified Design. That will give us, as a
24 Subcommittee anyway, the opportunity to discuss

1 that technical information. In many cases, what
2 comes out of these subcommittees are questions that
3 the staff needs to take back. So, that is just for
4 future reference.
5 Now, Ron, what I would propose is,
6 before we go to Section 10.4 -- well, we have two
7 options. We either let them finish through 10.4.10
8 and get our questions on the record at the end,
9 which might be more efficient. I do have a hard
10 stop at noon. I have a meeting at noon. Or we can
11 insert them at some other time. What is your
12 preference?
13 CHAIRMAN BALLINGER: Well, we have
14 inserted Section 2.3 at a later time. And I am
15 wondering whether or not it might be better to
16 allow a little bit of preparation on the part of
17 the --
18 MEMBER STETKAR: I submit that it is
19 better to have the folks who are directly related
20 to Chapter 10 sitting upfront when we have these
21 questions rather than putting them at the end of
22 the day and bringing them back.
23 CHAIRMAN BALLINGER: No. No, I agree.
24 But I am just wondering whether or not there has

1 been enough preparation on the part of the KHNP
2 folks to give us an adequate presentation.
3 MEMBER STETKAR: It is they won't give
4 a presentation. They are not prepared to give a
5 presentation. If they were, we would have it.
6 CHAIRMAN BALLINGER: Not today.
7 MEMBER STETKAR: It is unfortunate that
8 they came unprepared. We came prepared and it is
9 important for us -- this is our only opportunity as
10 a Subcommittee at this stage of the review to give
11 KHNP and the staff feedback on all of Chapter 10 in
12 its entirety, and we ought to have that
13 opportunity.
14 CHAIRMAN BALLINGER: Okay. In that
15 case, maybe it is better to just get our questions
16 on the record on these sections. And what that may
17 end up doing is resulting in --
18 MEMBER STETKAR: That may.
19 CHAIRMAN BALLINGER: Yes.
20 MEMBER STETKAR: But should we do that
21 -- all I'm asking now is a procedural question --
22 should we do that? Let them finish their
23 presentation through 10.4.10 and, then, bring up
24 the questions on those other sections at that time,

1 before we finish Chapter 10? Or should we do it
2 now before they do 10.4.8? It doesn't make any
3 difference. Think about it during the break.
4 CHAIRMAN BALLINGER: Yes, I'm
5 indifferent. In the meantime, let's talk about
6 that over the break.
7 So, we would be in recess until 20
8 minutes until 11:00.
9 (Whereupon, the foregoing matter went
10 off the record at 10:24 a.m. and went back on the
11 record at 10:40 a.m.)
12 CHAIRMAN BALLINGER: Earth to
13 everybody, okay, we're back in session. Let's
14 continue.
15 Well, we have had some discussions
16 during the break, and the path forward will be do
17 the presentations and, then, at the end of your
18 presentations we will get our questions and answers
19 on the record as best we can on the sections that
20 were not reviewed.
21 But, in the future for future
22 presentations, we want to be sure that we get
23 presentations on every section of every chapter,
24 not just the RAIs.

1 MR. SISK: Rob Sisk, Westinghouse.
2 And thank you. I appreciate that. I
3 do just want, as far as on the record, I do want to
4 just be clear. This meeting was originally
5 scheduled for two days, and we had to make some
6 decisions on how to fit everything into the
7 schedule we had. So, we were trying to find where
8 the value was to cover the important topics. We
9 may have missed the boat on some of it, but we
10 definitely want to hear ACRS's questions and
11 concerns.
12 CHAIRMAN BALLINGER: That just means we
13 need to work a little bit more closely when we
14 schedule things and we make, also, guesses on how
15 long things are likely to take.
16 MEMBER STETKAR: The other thing is
17 that, quite honestly, this is a Subcommittee
18 meeting and we are not constrained to stop at five
19 o'clock in the afternoon. We have had Subcommittee
20 meetings go until nine, 10 o'clock at night.
21 CHAIRMAN BALLINGER: Yes, there have
22 been attempted homicides after that.
23 (Laughter.)
24 MR. SISK: Appreciate that, and I

1 think, as you indicate, we do need think about our
2 scheduling time to fit everything in because it is
3 a lot of material.
4 CHAIRMAN BALLINGER: Okay, continue.
5 MR. J.W. CHOI: Good morning,
6 everybody. My name is Joon Wan Choi. I have
7 worked in Korea E&C as a mechanical system engineer
8 since 1996.
9 I present 10.4, other pictures of the
10 system and the system open items will be presented.
11 The first is the generator blowdown system. The
12 generator blowdown system has no safety function
13 except the two functions which are the containment
14 isolation capability and the steam generator
15 secondary side pressure boundary.
16 It is to assist in maintaining the
17 chemical characteristics of the secondary side
18 water with permissible limits during normal
19 operation and anticipated operational occurrences
20 such as a main condenser tube leak or a steam
21 generator primary-to-secondary tube leakage. It
22 consists of two subsystems, the blowdown subsystem
23 and the wet lay-up subsystems.
24 The blowdown subsystems is to remove

1 impurities concentrated in steam generators by
2 continuous blowdown and periodical high-capacity
3 blowdown. In addition, an emergency blowdown can
4 be operated to reduce to the steam generator water
5 level during a multiple steam generator tube
6 rupture event.
7 The wet lay-up subsystem is to maintain
8 the steam generator water chemistry within the
9 specified ranges during shutdown operation.
10 MEMBER STETKAR: Can I ask you about
11 the emergency blowdown function? Now I don't know
12 what information is proprietary or what is not
13 proprietary. I know that there are three blowdown
14 lines to the blowdown flash tank, and I won't give
15 the line sizes, but there are two smaller lines and
16 one larger line. Is the larger line the emergency
17 blowdown line? I am looking the DCD at figure
18 10.4.8-1. Is everything in the DCD non-
19 proprietary? I don't know if it is or not, because
20 I do find some bracketed things.
21 MR. SISK: I will make a clarification
22 relative to the DCD. There is SRI material which
23 is treated as proprietary.
24 MEMBER STETKAR: Yes.

1 MR. SISK: But I believe everything
2 that is in the DCD from a technical proprietary
3 nature is non-proprietary. I will look over to the
4 staff --
5 MEMBER STETKAR: Okay. I won't specify
6 line sizes because that might be details. But, if
7 I look at that figure, I see three lines, two
8 smaller lines that have the same size and a larger
9 line. Is the large line the emergency blowdown
10 line.
11 MR. SEO: That's right.
12 MEMBER STETKAR: It is? Okay.
13 MR. SEO: Because the emergency
14 blowdown is about 40 percent of the --
15 MEMBER STETKAR: Turn your microphone
16 on, please.
17 MR. SEO: I'm sorry. Emergency
18 blowdown proration is designed about 40 percent of
19 emission or steaming ratio.
20 MEMBER STETKAR: I understand that.
21 This may be too much detail now, but you say that
22 that line is used for rapidly reducing steam
23 generator level during a multiple tube rupture
24 event. My question is, how are the operators

1 instructed to use that line? In other words, if
2 I'm an operator, how do I know when I should open
3 that emergency blowdown line? Is that included in
4 my emergency operating procedures? And if so, what
5 criteria do I use to open that line? In other
6 words, how do I know when I'm supposed to open the
7 emergency blowdown line? You don't have to answer
8 it now, but that is a specific feature of this
9 design and I would hope that it is reflected in
10 some sort of basis for the emergency operating
11 procedures for this design.
12 And as part of that question, the steam
13 generator blowdown itself is isolated by a -- I
14 think it is containment isolation signals from
15 safeguards actuation. And therefore, if I get a
16 safeguards actuation, that emergency blowdown line
17 will be isolated, so that if I'm going to use as an
18 operator, I must have criteria to reset the
19 isolation signals so that I can use that blowdown
20 line.
21 So, in summary, my basic question is,
22 since this is a feature of the design, how are the
23 operators instructed to use it? What criteria for
24 opening the blowdown line? What criteria for

1 resetting the steam generator blowdown isolation
2 signals? And what criteria for terminating your
3 emergency blowdown? Because this actually is an
4 unusual feature. So, you just can't pick up a
5 standard set of emergency operating procedures and
6 figure out how to use this thing.
7 MR. SEO: Let me explain your question.
8 Emergency blowdown is used during the emergency
9 seen in a tube rupture. In that case, the steam
10 level will be increased. In that case, the
11 incinerator level is high, is initiated by the main
12 steam isolation signal. Therefore, the main steam
13 isolation signal to isolate the contained isolating
14 variable on the blowdown system.
15 So, there are two contained isolation
16 variable for each steam generator. Two contained
17 isolation variables receive the containment
18 isolation signal, such as MSIS contains the
19 isolation actuation signal or the auxiliary
20 feedwater actuation signal, and so on. In the
21 case of these variables are closed on receipt of
22 condenser actuation signal. Therefore, an
23 emergency blowdown in that case of containment
24 isolation variable will be isolated by a main steam

1 isolation signal.

2 MR. OH: This is KHNP, Andy Oh, of the

3 Washington Office.

4 Based on EOPs and APR 1400, there is

5 some criterion for the operation of the SBCS

6 Blowdown System, and steam generator levels should

7 be kept between a wide range of 55 to 80 percent.

8 In order to keep that wide range --

9 MEMBER STETKAR: Fifty-five to 80

10 percent wide range?

11 MR. OH: Yes.

12 MEMBER STETKAR: The main steam

13 isolation signal comes in at 90-percent narrow

14 range. Where is that relative to wide range? It

15 is well below that.

16 MR. OH: Could you say that again,

17 please?

18 MEMBER STETKAR: As best as I can tell,

19 the main steam isolation signal, which I am going

20 to ask about later, comes in at 90-percent narrow

21 range level, narrow range. Where is that 90-

22 percent narrow range relative to the wide range

23 levels that you just mentioned?

24 MR. OH: As far as I know, for MSIV or

a setpoint, there is no reference for the narrow range. It is only for wide range.

MEMBER STETKAR: Well, okay, give me a second here because I was going to ask that question later. Let me find my notes on this.

In Section 7.3.1.3, table 7.3-3, 7.3-5(a), and figure 7.3-7, I find that the main steam isolation signal is actuated by any of the following conditions: No. 1, containment pressure greater than 1.9 PSIG; No. 2, pressure in either steam generator less than 855 PSIA; No. 3, level in any steam generator, narrow range greater than 90 percent, or manual. That is from Chapter 7 of the DCD. So, you should go check to see your statement about narrow range level isolating main steam.

I found in Chapter 10 statements that said that the main steam isolation occurs on high steam generator level, but high steam generator level to me could be any number of different levels. So, that is why I went to go look in Chapter 7 and I found the actual setpoint.

I will also observe that low pressurizer pressure will give me a safeguards actuation which will give me a containment

1 isolation signal which may occur well before I get
2 to very, very high level in the steam generators.
3 So, I would like, if the EOPs actually
4 have that guidance for the APR 1400, I would like
5 to see that guidance because that is what I was
6 asking for.
7 MR. OH: Yes. I think probably this
8 narrow range, 90 percent is --
9 MEMBER STETKAR: I don't know.
10 MR. OH: -- a range in the wide range.
11 MEMBER STETKAR: You know, it would
12 have helped if I could see where the levels were in
13 wide range and narrow range, but I couldn't find
14 any drawing that showed me where the wide range and
15 level range narrow level taps were. So, I couldn't
16 do that correlation.
17 MR. OH: Okay. We will get back to you
18 with the wide range and narrow range calculation.
19 MEMBER STETKAR: Good. Well, wide
20 range and narrow range is part of it. But more
21 importantly to me is how are the operators
22 instructed? What criteria do they use? Because it
23 is an issue of timing. How soon do I know,
24 according to the procedures and indications, that I

1 need to initiate emergency blowdown?

2 Because there must be some time window

3 there before things -- if you do not require them

4 to reset the isolation signal, that means I must

5 initiate it before the isolation valves go closed.

6 Or, if I am allowed to initiate it after the

7 isolation valves go closed, then what criteria do I

8 have as an operator to reset those isolation

9 signals and reopen the isolation valves? And is it

10 too late by then?

11 MR. OH: Andy Oh again.

12 And the EOP specified the criterion

13 very clearly. As you know, this is accident

14 status, that the wide range is the one referenced

15 for the operator. And so, in order to keep that

16 specified wide range, an operator can often, the

17 SBCS operator or SBCS assistant initiated the

18 operation of an SBCS system.

19 MEMBER STETKAR: And you said, just so

20 I can take notes here, you said, in the EOPs it

21 says between 55 and 80 --

22 MR. OH: Eighty-eight.

23 MEMBER STETKAR: -- 88 percent wide

24 range?

1 MR. OH: Wide range.
2 MEMBER STETKAR: Thank you.
3 MR. OH: Sure. Thank you, sir.
4 MR. J.W. CHOI: The next slide, please.
5 I presented one open item listed there, the
6 blowdown system. The description of the issue is
7 like this. The staff requests to revise the
8 existing actuation signals. However, it is shown,
9 actuation signal and blowdown in DCD figure
10 2.7.1.8-1 and to provide additional detail in --
11 MEMBER SKILLMAN: Excuse me. Sir, is
12 your microphone on?
13 CHAIRMAN BALLINGER: It is pretty much
14 shielded.
15 MR. J.W. CHOI: Yes. Sorry.
16 MEMBER SKILLMAN: Thank you.
17 MR. J.W. CHOI: Yes. Our answer is
18 like this: indicate the actuation signal HRAS and
19 BFTHHLAS in DCD figure 2.7.1.8-1 and provide the
20 detailed description in DCD Chapter 7, Subsection
21 7.3.1.9.
22 Now I present the auxiliary feedwater
23 system with one open item. Provide the auxiliary
24 feedwater to the intact steam generators until the

shutdown cooling system entry condition when the main feedwater system is inoperable for the following events: loss of normal feedwater, main steam line break or feedwater line break, steam generator tube rupture, transient condition or postulated accidents such as reactor trip, any incident that results in station blackout, small break loss-of-coolant accident, and anticipated transients without scram.

This shows the flow diagram of the auxiliary feedwater system. The auxiliary feedwater system consists of two auxiliary feedwater storage tanks, two turbine-driven auxiliary feedwater pumps, and two motor-driven auxiliary feedwater pumps.

MEMBER STETKAR: Can I ask a question? If I look at figure 10.4.9-1 in the DCD, that figure shows several different line sizes from the auxiliary feedwater storage tanks to the auxiliary feedwater pump suctions. In particular, sheet 1 of that drawing shows a 12-inch line from each auxiliary feedwater storage tank to pumps, to the train A pumps, pump A and C. It shows that line is reduced to two 6-inch lines, one to each pump. To

1 the train B pumps, it shows that that line is
2 reduced to two 8-inch lines. And if I go to sheet
3 2, it shows that each pump has a 10-inch line. So,
4 how big are the pipes? And why aren't they
5 consistent on the drawing in the DCD?
6 MR. SEO: Let me explain your question.
7 To design the piping sizes, in that case we
8 consider the proration. The proration is
9 considered for determining the pipe sizes. For
10 auxiliary feedwater pump, it has a minimum
11 proration. Therefore, the suction line of the
12 auxiliary pump has regular proration to the steam
13 generator, plus the minimum prorations are
14 considered. Therefore, the pipe size is bigger
15 than the side pipe.
16 MEMBER STETKAR: Okay.
17 MR. SEO: And, in addition to the
18 recommended pipe velocity, based on our design
19 standard, the suction line velocity is less than
20 the side pipe, to consider the MPSA, that plastic
21 suction header at the pump suction site.
22 MEMBER STETKAR: Let me thank you. I
23 appreciate that. I understand piping design. I am
24 simply asking, if I look at the Certified Design

1 Document drawing, which will become part of the
2 Certified Design, I see that on sheet 1 of that
3 drawing there's a little arrow going out to pump A
4 and pump C. One of those pumps is a motor-driven
5 pump; one is a turbine-driven pump. Those lines
6 are shown as 6-inch lines. I go down to the next
7 page of that same drawing and, suddenly, they
8 become 10-inch lines. I look at the flow drawings
9 on the first sheet and I see 8-inch lines going to
10 pump B and pump D, one being a motor-driven and one
11 being a turbine-driven. They are 8-inch; they are
12 not 6-inch. So, why is it 8 to one set and 6 to
13 the other? And yet, when I go to the second page,
14 they are suddenly 10-inch? If the design is so
15 precise, as you describe, why can't we have a
16 drawing that tells me what those pipe sizes are?
17 MR. SEO: Let me confirm your question.
18 Pipe size, 8-inch pipe size is on figure 10.4.2;
19 the 9-inch one, over three pages, right?
20 MEMBER STETKAR: It is on page 1 of 3.
21 MR. SEO: One of 3?
22 MEMBER STETKAR: If you look on page 1
23 of 3, on the righthand edge of that drawing, if you
24 blow it up enough so that you can actually see the

numbers, at the top from AFWST, they go to 6-inch lines, and at the bottom from AFWSTB, they go to 8-inch lines. And yet, if I drop down to page 2 of 3, I see that the suction line to each pump is a 10-inch line, every pump, all four pumps.

I don't need an answer now. I would like to have a DCD that is at least consistent, so that I can see how big the pipes are, since they are apparently designed very, very precisely.

MR. SEO: Let me explain your question. Generally, we design the pipe size based on a recommended pipe velocity.

MEMBER STETKAR: You know, I hear that, but the pipe velocities should be precisely the same in pumps A and C versus pumps B and D, unless for some reason you are designing one train of auxiliary feedwater substantially different from the other train. If there is a design difference, for some reason train B, meaning pumps B and D, need more flow than pumps A and C, I want to understand why. If they need precisely the same flow, I don't know why the pipes would be sized differently.

MR. SEO: I'm sorry. The figure, we

1 have to revise it --

2 MEMBER STETKAR: Good. Thank you.

3 MR. SEO: -- from 8 to 6 inches. I'm

4 sorry.

5 MEMBER STETKAR: And they're 6 inches?

6 MR. OH: Yes.

7 MEMBER STETKAR: Okay.

8 MR. OH: This is Andy Oh, KHNP.

9 MEMBER STETKAR: Right.

10 MR. OH: The Design Document, the pipe

11 size should be corrected. All the pipe sizes

12 should be 10 inches.

13 MEMBER STETKAR: Ten inches? Yes,

14 well, I was guessing that it would be somewhere

15 between 6 and 8 and 10. They should all be 10?

16 Let's just get it clarified. It is just --

17 MR. SEO: Let me reconfirm your

18 question. As far as what I am saying, figure 1 of

19 3, the bottom right, right?

20 MEMBER STETKAR: Yes.

21 MR. SEO: The bottom right has 12

22 inches, 12-inch pipe; the range is to 8 inches.

23 MEMBER STETKAR: Yes.

24 MR. SEO: Your concern is this is 8

1 inches. However, about the two pipes that are 6
2 inches, what is the inconsistency?
3 MEMBER STETKAR: And furthermore --
4 that is part a of the question, if you will --
5 MR. SEO: Yes.
6 MEMBER STETKAR: Furthermore, if I go
7 to sheet 2 of 3, the next sheet, if I look at the
8 piping that enters each of those pumps, each pump
9 is shown as a 10-inch pipe. So, as best as I can
10 tell from the drawing, there are three different
11 sizes. Part b is --
12 MR. SEO: Yes.
13 MEMBER STETKAR: The basic question is,
14 what is the size of the piping that goes from the
15 auxiliary feedwater storage tank to each pump?
16 MR. SEO: Please, let me correct that
17 answer. The suction pipe size is 10 inches. Two
18 of the three pages is right. One of the three
19 pages, the 6 inches and the 8 inches should be
20 revised to 10 inches.
21 MR. SISK: We understand your question.
22 I think the clarification is sheet 1 of 3 needs to
23 be revised to reflect the correct pipe size of 10
24 inches.

1 MR. SEO: Ten inches, right.
2 MEMBER STETKAR: Ten inches is right?
3 MR. SEO: Yes.
4 MR. SISK: Ten inches is correct.
5 MEMBER STETKAR: Thank you.
6 Part of the reason I bring this up, No.
7 1 is consistency in the DCD documentation itself,
8 but if, indeed, there was some subtle difference in
9 the design of those trains, such that I needed more
10 flow, if you will, I just wanted to confirm that
11 that wasn't the case.
12 MR. SEO: It is not the case.
13 MEMBER STETKAR: I didn't think it was,
14 but I can divine anything when I look at pipe
15 sizes. So, thank you.
16 MEMBER SKILLMAN: I do have a question
17 on this image. You show the venturi here. It is
18 right at the center bottom of this image. And on
19 sheets 2 and 3 of the document that John was
20 talking about, this is figure 10.4.9-1, the
21 venturis are located inside containment, and they
22 are immediately upstream of the downcomers.
23 So, my question is, what experience do
24 you have with these venturis? Have they been

tested? And are you fully aware of the downstream conditions that result when these venturis have been in operation for some time period? What is your experience with these venturis?

MR. SEO: Could you explain once more, please?

MEMBER SKILLMAN: Sure. The purpose for the venturi is to limit the flow.

MR. SEO: Yes.

MEMBER SKILLMAN: And what really occurs is, if the downstream pressure drops significantly, the venturi will cavitate.

MR. SEO: Yes.

MEMBER SKILLMAN: And that will produce two very major consequences. One is a large amount of the mechanical and acoustical energy and a large amount of erosion on the downstream piping. So, for short time periods this is not a problem. For long time periods it can be a very large problem. So, my question is, what experience do you have?

MR. SEO: Yes. In Korea we have several experiences, a 1,000-megawatt PWR from YG 3 and 4, about 20 or 30 years' experience there. But the downstream, potentially, material is stainless

1 steel, and the auxiliary feedwater system can be
2 used only to the accident condition on receipt of
3 aux feedwater actuation signal or after in-service
4 tests every quarter, quarterly, every three months.
5 Therefore, the design has not used the
6 maximum proration to limit the maximum proration.
7 The maximum proration can occur during the accident
8 conditions, such as a steam line break or main
9 steam line break. The steam generator pressure
10 decreases; in that case, the difference of
11 differential pressure between steam generator tube
12 upstream of captive entry. However, actually,
13 without the accident, there cannot be occurred this
14 condition.
15 However, at the manufacturing at the
16 shop, the manufacturer's shop, it can be tested if
17 the maximum proration is controlled by captive
18 entry. So, as far as I know, we don't have any
19 adverse detector for downstream of a captive entry.
20 Okay?
21 MEMBER SKILLMAN: Thank you.
22 MR. J.W. CHOI: Yes. The auxiliary
23 feedwater system and the supporting systems are
24 designed to provide required flow to the steam

1 generator with a loss of offsite power event,
2 assuming a single active failure. The auxiliary
3 feedwater system components are located in the
4 auxiliary building, which is designed as Seismic
5 Category 1. All mechanical components and the
6 piping up to the auxiliary feedwater isolation
7 valves are Safety Class 3 and designed to ASME
8 Section III requirements.
9 All components and piping from and
10 including the containment to isolation valve to the
11 steam generators are Safety Class 2 and designed to
12 ASME Section III requirements.
13 MEMBER STETKAR: Can I ask, before you
14 go to the next slide, the first bullet on this says
15 that it is designed to provide required flow after
16 a loss of offsite power, assuming a single act of
17 failure. So, in the DCD you say that the turbine-
18 driven AFW pump lines are supplied with battery-
19 backed Class 1E power supplies for 16 hours. So, I
20 looked that up, and that must be trains C and D of
21 the batteries, because those are your 16-hour
22 batteries, because trains A and be are the 8-hour
23 batteries.
24 And then, I looked at the power

1 supplies to each component that is listed in table
2 10.4.9-2, and it was curious to me that the motive
3 and control power for turbine-driven auxiliary
4 feedwater trains C, modulating valve 037, is
5 supplied from electric power train B, which is only
6 an 8-hour battery, and the power for turbine-driven
7 auxiliary train D, dog, modulating valve 038, is
8 supplied from electric power train A rather than
9 train D, dog.
10 Those are obviously intentional because
11 everything else lines up A, B, C, D, as I would
12 expect it for the four trains. So, I did some of
13 my own analyses to see whether there was some
14 fundamental reliability issue related with that
15 specific allocation of power supplies. And I can't
16 find any. In other words, I don't understand why
17 those specific power supplies are from trains A and
18 B rather than supplies from train C and D. Do you
19 have any quick explanation of that? I mean, we
20 don't have time, nor is it appropriate here, to go
21 through all of the permutations and combinations I
22 went through.
23 MR. SEO: Let me explain the design
24 basis of the auxiliary feedwater system.

1 MEMBER STETKAR: Okay, I'll let you do
2 that, but please don't get very high level. I'm
3 asking you a very specific question. Why is the
4 power supply to those valves from train A and train
5 B rather than train C and train D?
6 MR. SEO: Yes. Train A and B is
7 supplied to motor-driven auxiliary feedwater pumps.
8 So, this power, it provides a diesel generator,
9 both.
10 MEMBER STETKAR: Let me, just for the
11 record, not both, because the station blackout gas
12 turbine generator can supply train A or train B,
13 but not both.
14 MR. SEO: Yes.
15 MEMBER STETKAR: Yes. If you look at
16 Chapter 8, that is what it says.
17 MR. SEO: Plus, to your question, the
18 difference between the power, available power
19 duration, 8 hours and 16 hours, the turbine-driven
20 system can be used during the station blackout
21 condition. Therefore, as you know, the auxiliary
22 system has to be operated during 8 hours on hot
23 standby condition and within 6 hours to a shutdown
24 cooling system. Therefore, about 14 hours minimum,

1 14 hours, they have to be operated. Therefore, the
2 16 hours of battery can be capable of providing the
3 power to the steam generator during the station
4 blackout condition. However, the motor-driven
5 pumps with the 8-hour, a motor-driven pump cannot
6 use that during the station blackout condition.
7 Therefore, we do not consider the 16 hours time
8 duration for A and B battery.
9 MEMBER STETKAR: I think it is probably
10 in the interest of time if you go back and look at
11 the transcript and see what I'm asking about. In
12 particular, I'm asking about the flow control valve
13 for the turbine-driven auxiliary feedwater pump C,
14 Charlie, turbine-driven pump. The flow control
15 valve receives power from electric power train A,
16 yes, not C, not the 16-hour battery, from train A.
17 MR. SEO: Yes.
18 MEMBER STETKAR: And the flow control
19 valve for the turbine-driven auxiliary feedwater
20 pump D, dog, receives power from -- I probably got
21 that backwards here. Let me make sure that I am
22 correct for the record.
23 The flow control valve for turbine-
24 driven auxiliary feedwater pump C, Charlie, is

1 supplied from electric power train B, boy. The
2 flow control valve for turbine-driven auxiliary
3 feedwater pump D, David, is supplied from electric
4 power train A, alpha.
5 MR. SEO: Yes.
6 MEMBER STETKAR: That, to me, is very
7 curious. It doesn't seem to be consistent with
8 what you're telling me about 16-hour batteries
9 being required for the turbine-driven auxiliary
10 feedwater trains.
11 MR. SEO: That is based on the
12 diversity. We can control the steam generator
13 later by auxiliary modulating variable or isolation
14 variable. If power pauses, such as station
15 blackout, in that case the modulating variable
16 cannot use, cannot operate through moderating the
17 steam generators. Therefore, these variables are
18 open-type variable. It is the case that this
19 variable will open. However, the auxiliary
20 feedwater isolated variable can control the steam
21 generator level at loss-of-power condition.
22 Because the auxiliary feedwater isolated variable
23 division for turbine-driven auxiliary pump can be
24 operated during the 16 hours with a turbine-driven

1 auxiliary feedwater pump.

2 MEMBER STETKAR: Now we are getting to

3 part of the discussion. If I lose DC power train

4 C, so if I have no DC power train C, does turbine-

5 driven auxiliary feedwater pump C remain running?

6 In other words, what happens to the turbine

7 controls when I lose DC power? I'm asking this

8 question so I get to the right table in my

9 comparative analysis.

10 MR. SEO: Let me remind my explanation.

11 Turbine-driven C received the power C, and the

12 auxiliary feedwater isolation variable connected to

13 turbine-driven C. Also, it received the power C.

14 MEMBER STETKAR: Yes.

15 MR. SEO: Yes.

16 MEMBER STETKAR: I was asking, though,

17 what happens to the turbine controls, the controls

18 for the turbine itself, the turbine speed control,

19 when I lose, when I do not have DC power train C.

20 MR. SEO: It's right; the turbine-

21 driven C also received the power C to control --

22 the turbine is controlled by the governor. The

23 governor also receives the power C.

24 MEMBER STETKAR: Yes.

1 MR. SEO: Yes.
2 MEMBER STETKAR: Suppose I do not have
3 power C. Does the turbine governor go closed?
4 Does it go fully open? Or does it stay there?
5 MR. OH: This is Andy Oh, KHNP.
6 Hypothetically, if we lost our function
7 of battery C, then we lost -- the turbine control
8 system cannot be powered by the DC battery. So, it
9 is out of control and overspeed is tripped.
10 MEMBER STETKAR: Okay.
11 MR. OH: Yes, tripped it. And also,
12 the power for MOB valve, isolation valve, we cannot
13 close or open. So, that means, if we lost the
14 battery C, it means we lost function of C train for
15 the auxiliary water pump.
16 MEMBER STETKAR: Good. Thank you.
17 That is my case No. 2, in which case your design
18 seems to require more operator intervention or more
19 open/close failure of the isolation valve than a
20 design that would have --
21 MR. OH: However -- it is still Andy Oh
22 -- however, if the battery is alive, supplied then,
23 the MOB in isolation valve automatically open and
24 close, keep the steam generator level to 25 percent

1 or 40 percent.

2 MEMBER STETKAR: Right. I understand

3 that. I understand that. That's my case No. 2

4 over here that I ran.

5 And if you look at the entire system

6 design, you see that if loss of DC fails the

7 turbine, that is a specific condition. So, I will

8 take away that whole train if I have no DC power.

9 And that is what you said the design is. Then,

10 with DC power available, and depending on which

11 other combinations of train A and B power failure I

12 have, I can put myself into a situation where I am

13 demanding that isolation valve to go open and

14 closed more often than if I had power to the

15 control valve from its own division. You have to

16 look at all of the combinations.

17 And I will just put that on the record.

18 It was very curious to me, and it is obvious that

19 somebody made an active decision. I would like to

20 see the rationale for that decision, for why A and

21 B to those control valves. And is that more

22 reliable than having the control valves powered

23 from their own division? If it is more reliable, I

24 would like to see the justification of why.

1 MR. SISK: For the sake of time, we do
2 have the note and the comment.
3 MEMBER STETKAR: Yes.
4 MR. SISK: We will go back and assess
5 that question in more detail. But I do --
6 MEMBER STETKAR: Yes, yes. No, in the
7 interest of time --
8 MR. SISK: Yes.
9 MEMBER STETKAR: -- it is way too
10 detailed. I just wanted to make sure that we had
11 enough clarity on the record, so you could kind of
12 trace back through to see what the genesis was.
13 MR. SISK: Yes. Okay. We're good.
14 MEMBER STETKAR: Thanks.
15 MR. SEO: AC power is reliable.
16 However, we did not consider the DC power failure
17 such as station blackouts. Station blackout is
18 only the total loss of AC power, onsite and offsite
19 power. However, the battery is available during
20 the station blackout condition.
21 As you know, the auxiliary feedwater
22 system has the unit system to remove the decay heat
23 from the steam generator, the second side from the
24 RCS decay heat. Therefore, the DC power can

1 provide power to the steam generator during the
2 station blackout condition, even though the gas
3 turbine generator can be used during a severe
4 condition. However, if a gas turbine generator is
5 not available, at that case the battery is
6 available during the 18 hours. Therefore, by using
7 the auxiliary feedwater pump and the aux feedwater
8 isolation cable, it can be supplied, the power, to
9 a steam generator, not effective as a steam
10 generator.
11 CHAIRMAN BALLINGER: Please move on.
12 MR. J.W. CHOI: Okay. Continuing
13 through my presentation, the safety-related portion
14 of the auxiliary feedwater system appropriately
15 protected against the possible effect of a
16 postulated high- or moderate-energy pipe failure,
17 including pipe whip or jet impingement. A failure
18 of a non-essential equipment or component does not
19 affect the auxiliary feedwater system safety
20 functions.
21 Next, please. I printed one open item
22 of the auxiliary feedwater system.
23 MEMBER STETKAR: Let me stop you. I am
24 trying to write notes and listen at the same time.

1 You say that the auxiliary feedwater
2 system is protected from turbine missiles. Have
3 you done an analysis of missiles from the turbine-
4 driven auxiliary feedwater pump itself? Turbine-
5 driven auxiliary feedwater turbine missiles?
6 (Laughter.)
7 If you haven't, my concern is that if
8 the auxiliary feedwater turbine can generate a
9 missile that penetrates the turbine casing and
10 damages either the suction or discharge piping in
11 that room, you, then, will disable two trains of
12 auxiliary feedwater because you basically will
13 drain that auxiliary feedwater storage tank or you
14 must isolate it. So, even if you say the missile
15 was contained within the room and will not damage
16 the motor-driven auxiliary train, if it can damage
17 the piping in that room, the auxiliary feedwater
18 piping itself, then you effectively functionally
19 disable both of the trains taking suction from the
20 same pump, from the same AFWST.
21 MR. SEO: Turbine-driven auxiliary pump
22 also have the emergency trip systems, such as the
23 main turbine, electric trip, during the overspeed
24 condition. Also, the motor-driven auxiliary

1 feedwater pump and turbine room pump are separated,
2 physically separated. Therefore, some failure of
3 the turbine auxiliary pump cannot affect the safety
4 function to supply the auxiliary steam generator.
5 MEMBER STETKAR: Just to make sure that
6 my question is clear, can you go back to your slide
7 44? What I'm talking about is, if a missile comes
8 from the turbine-driven auxiliary feedwater pump
9 and damages the blue line, either on the discharge
10 side or the suction side of that pump, I will,
11 then, drain the entire auxiliary feedwater storage
12 tank through that broken pipe and, therefore,
13 disable the motor-driven pump. If I isolate --
14 there's a local isolation valve at the bottom of
15 the auxiliary feedwater storage tank -- if I close
16 that valve to prevent the tank from draining, the
17 valve is closed and I also disable the motor-driven
18 pump train.
19 So, I just want to make sure that it is
20 clear. I am not talking about a missile from the
21 turbine-driven pump hitting the motor-driven pump
22 itself. I'm talking about the missile in the room
23 damaging the piping in the room.
24 MR. SISK: The common suction, common

1 discharge.

2 MEMBER STETKAR: The common suction,

3 common discharge. Well, it doesn't have to be part

4 of the common discharge. It is anywhere in the

5 discharge line the water is going to flow through

6 the pump out the discharge. Depending on where it

7 is, I might be able to isolate the discharge. I

8 can't isolate the suction except at the tank

9 itself. There is a manual to help to do that. So,

10 that is my question, not about the --

11 MR. SISK: We understand the question.

12 MEMBER STETKAR: Thanks.

13 MR. J.W. CHOI: Next, please. I print

14 one open item of the auxiliary feedwater system.

15 NRC staff asked to provide a description of the

16 auxiliary feedwater system reliability analysis to

17 be performed in accordance with TMI Action Item

18 II.E.1.1 of NUREG-0737.

19 Our answer is like this: the results of

20 the auxiliary feedwater system reliability analysis

21 have already been provided in the response to RAI

22 86-8003. The description of the auxiliary

23 feedwater system reliability analysis will be made

24 available to the staff.

1 Next, I put in two open items of the
2 auxiliary steam system. The first of two, briefly
3 introduce the auxiliary steam system. It is a non-
4 safety-related system.
5 MEMBER STETKAR: Let me stop you then.
6 I'm not done on auxiliary feedwater yet.
7 In the DCD in Section 10.4.9.2.2.5, it
8 discusses -- and in Section 10.4.9.2.2.4 -- those
9 sections discuss control and isolation of auxiliary
10 feedwater. In the isolation discussion it says,
11 "The isolation valves are closed automatically by
12 an SFAS signal at a steam generator level higher
13 than normal operation water level." That is for
14 auxiliary feedwater isolation.
15 I could not find anything, any
16 discussion of that signal in Chapter 7. So, I am
17 curious what safeguards actuation signal isolates
18 auxiliary feedwater, because it says in the DCD
19 that it is isolated. And all it says is that "at a
20 steam generator level higher than the normal
21 operation water level," which could be a large
22 number of different levels. So, if you could help
23 me understand what that signal is and what the
24 isolation setpoint is, I would appreciate that.

1 Oh, you have that one. In figure
2 10.4.9-1, sheet 1 of 3 shows the various
3 alternative makeup lines to the auxiliary feedwater
4 system. I understand those lines.
5 MR. SISK: Excuse me. Could you give
6 me that figure number again, please?
7 MEMBER STETKAR: It is the auxiliary
8 feedwater system drawing. It is 10.4.9-1 on the
9 first sheet that shows the auxiliary feedwater
10 storage tanks.
11 In particular, there is a 10-inch raw
12 water makeup line that comes in kind of in the
13 middle of the page from the righthand side. And
14 then, there is also a 10-inch makeup line from --
15 I'm sorry -- a 10-inch makeup line that comes in
16 from sheet 2A, it is labeled. And that must be
17 from the condensate storage tanks. That is the
18 only thing that I could figure out, because I kind
19 of traced that line to the condensate storage
20 drawing.
21 My question is, there is a discussion
22 in Section 10.4.9 about the raw water makeup supply
23 from the raw water storage tank. So, I got curious
24 about that and I went to Chapter 9 of the DCD, and,

1 you know, I couldn't find anything about the raw
2 water system at all in Chapter 9 of the DCD. No
3 drawings, no discussion, no nothing. So, what is
4 the raw water system? And what is the raw water
5 storage tank? And when is it used? And does it
6 exist?
7 Condensate storage tanks I found. I
8 know they exist and I'm pretty sure I understand
9 the connection from the condensate storage tanks.
10 (Pause.)
11 Again, we don't have to answer it today
12 unless you have a quick answer.
13 MR. SEO: A raw water system can be
14 supplied only to exhausted aux feedwater storage
15 tank capacity, and the other problem, the
16 condensate storage tank cannot use it. At this
17 case, it only can be used by a raw water system. A
18 raw water system is to use the raw water reservoir.
19 The raw water reservoir is supplied with water
20 during the loss of an auxiliary tank or loss of
21 auxiliary capacity or condensate storage capacity.
22 At this case, another alternative can be supplied
23 in the auxiliary pump.
24 MEMBER STETKAR: I understand that.

1 What I am questioning is in the Certified Design
2 you specify, and I quote, "A non-safety-related
3 backup water source by gravity feed to AFW pump
4 suction is also available from the condensate
5 storage tank and raw water storage tank." In the
6 DCD I find documentation of what the condensate
7 storage tanks are, where they are located. In
8 fact, I see a pipe from those tanks that goes to
9 auxiliary feedwater. So, in the DCD I now
10 understand the design concept.
11 I find nothing in the DCD about a raw
12 water storage tank or any discussion of a raw water
13 reservoir or what the functional requirements are
14 for the raw water storage tank or the raw water
15 reservoir, or whatever you want to call it. So,
16 if, indeed, the DCD functional requirements for
17 auxiliary feedwater specify the need for a raw
18 water storage tank that implicitly must have some
19 capacity and some makeup, then why does the DCD not
20 describe that?
21 MR. SEO: Because the raw water system
22 is site-specific. Therefore, we cannot decide the
23 feeling that this is the case.
24 MEMBER STETKAR: Well, I'm sorry, if

1 you are taking credit for that as a supply for
2 auxiliary feedwater, you must have some volume or
3 makeup requirements. I can't put a raw water
4 system in there with a 2 GPM pump and a tank the
5 size of this coffee cup. So, there must be some
6 specification for the COL applicant to know how
7 much flow from the raw water system is needed and
8 what the tank capacity, if there is a tank, to
9 supply the auxiliary feedwater backup supply.
10 Otherwise, I don't know how to design that system
11 as a COL applicant.
12 MR. SEO: The raw water has a reliable
13 recommender. So, it says the cooling tower for
14 separating the water system and essential service
15 water system or a demineralized system. Therefore,
16 raw water can supply the water to so many systems.
17 Therefore, you cannot assume or you cannot
18 determine that it dissipates.
19 (Sound on phone.)
20 MEMBER STETKAR: Ignore that. That's
21 just our phone system.
22 MR. SEO: We cannot determine that it
23 dissipates. Therefore, the raw water reservoir is
24 considered by COL frequently. Therefore, we

1 understand that the raw water reservoir design is a
2 COL site specificity.
3 MEMBER STETKAR: We don't have time to
4 design the system, nor is it the ACRS
5 Subcommittee's function to design systems. I'm
6 just making the observation that, if the Certified
7 Design includes credit for a raw water supply as
8 backup to a safety-related function, which is the
9 auxiliary feedwater, then there should be some
10 information in the Certified Design that specifies
11 to me, as a combined license applicant, how much
12 water I need to supply for that particular
13 function.
14 I don't care how much water I supply
15 for the main cooling towers. I don't care how much
16 water I supply for the demineralized water system.
17 I care right at the moment how much water I supply
18 for auxiliary feedwater, and I need to know that as
19 a combined license applicant, so that I know when I
20 specify that system design that I at least have
21 that capacity available as a backup for my safety-
22 related auxiliary feedwater supply. And if I
23 don't, don't show it as part of your Certified
24 Design.

1 MR. SEO: We don't think that the
2 auxiliary tanker only contains dedicated capacity
3 to perform the safety function during an accident
4 condition. Therefore, the auxiliary storage tank
5 capacity can perform, can remove the decay heat
6 during the hot standby, from hot standby to
7 shutdown cooling system ancillary conditions.
8 Therefore, there is no need, there is no makeup
9 during the accident condition. However, beyond the
10 DBA condition, that case can be provided as an
11 alternative water source.
12 MR. SISK: We understand the question.
13 There are a couple of places where the raw water is
14 discussed in the DCD. The raw water provides
15 backup to the freshwater system for the fire
16 supplies and as a non-safety-related backup water
17 supply for the AFW. We will provide a more --
18 MEMBER STETKAR: It is mentioned in
19 words back there in Chapter 9. You found it. But
20 --
21 MR. SISK: We got you.
22 MEMBER STETKAR: You understand.
23 By the way, I understand that the
24 auxiliary feedwater storage tanks are sized such

1 that I can stay at, I will call it a condition hot
2 shutdown; you might call it hot standby. Anyway, I
3 can stay hot and pressurized for eight hours and,
4 then, I have enough capacity for a 6-hour cooldown
5 for the purpose of aligning shutdown cooling.
6 How long can I maintain hot shutdown
7 conditions, and only hot shutdown conditions, with
8 the capacity of one AFWST and with the capacity of
9 both AFWSTs, because I can crosstie the tanks? Do
10 you have that? I couldn't find that information
11 anywhere.
12 Again, that is not a design basis
13 licensing event. It is very, very important, for
14 example, for risk assessment, and it is important
15 for success criteria for these alternative makeup
16 supplies. It may be also important for your coping
17 times for flex mitigation strategies, by the way.
18 MR. SISK: Can you give me the specific
19 configuration that you are referring to once more?
20 MEMBER STETKAR: Yes. Specific
21 configuration is no cooldown, just stay at hot
22 shutdown conditions with steam relief through the
23 lowest setpoint main steam safety valve. So, I'm
24 sitting on the main steam safety valves, and

1 feeding the steam generators with enough, just
2 enough flow to remove heat. How long can I
3 maintain that configuration with the inventory from
4 only one AFWST? And how long can I make it,
5 maintain that condition if I have the inventory of
6 both AFWSTs? Because I can crosstie the tanks.
7 And obviously, I can extend it. It is not linear,
8 you know. So, that is why I am asking the
9 questions about one tank and two tanks.
10 MR. SISK: Right. I appreciate it.
11 Okay. Thank you.
12 MEMBER STETKAR: Sure. I'm done with
13 auxiliary feedwater.
14 MR. J.W. CHOI: Okay. I presented two
15 open items on the auxiliary steam system. The
16 first is break in auxiliary steam system. It is a
17 non-circulating system that supplies auxiliary
18 steam required for plant use during structural
19 cleanup situation and shutdown when the main steam
20 is not available.
21 The first description of open items is
22 like this. The staff requests to state clearly
23 which option they chose to meet 10 CFR 20.1406
24 regarding embedded and buried piping. Our answer

is like this. I think embedment and buried piping in the yard shall be minimized to the extent practicable by using concrete tunnels. Where embedded and buried piping cannot be avoided, consideration shall be given to minimize embedded piping lengths and to utilize double-walled piping with the leak detection capabilities on the outer piping. The response to the RAI will be revised as shown above.

The second description of the issue is like this. The staff requests to the applicant to clarify the actual seismic and quality group classifications of the auxiliary steam system components and piping within the reactor containment building. The applicant is requested to modify the DCD figure 10.4.10-1 and table 3.2-1 to clearly depict a consistent design.

Our answer is like this. Containment isolation valves and associated piping are Seismic Category 1 Quality Group B. The piping and valves downstream of the containment isolation valve within the reactor containment building are non-safety-related Seismic Category II and Quality Group D.

1 Next, the combined license information
2 open item. The staff noted inconsistencies among
3 the Chapter 9 and Chapter 10 in providing
4 operational procedures and maintenance programs to
5 satisfy 10 CFR 20.1406. The staff for Chapter 11
6 and 12 has decided to take on this issue and ask
7 the applicant to remove all COL items.
8 The KHNP has considered the removal of
9 all COL items related to 10 CFR 20.1406 in Chapter
10 9 and Chapter 10. During a teleconference between
11 KHNP and the NRC staff, it was agreed on to keep
12 the current COL items as is. The resolution to
13 this issue was submitted in the revised response to
14 RAI No. 246-8307.
15 Next, Chapter 10, our Steam and Power
16 Conversion System. Chapter 10 provides information
17 concerning the plant Steam and Power Conversion
18 System. The turbine generator control system,
19 overspeed protection, turbine rotors, inspections,
20 and supporting analyses specified in the DCD as
21 functional requirements, principles and overarching
22 architecture are compliant with the latest and
23 extant regulatory guidance and industry experience.
24 The Steam and Power Conversion System

1 removes energy from the RCS via the steam
2 generators and converts it to electric power in the
3 turbine generator. It provides safety-related heat
4 removal via the auxiliary feedwater system and the
5 main steam atmospheric dump.
6 The next slide is acronyms for this
7 Chapter 10 presentation. This is the end of my
8 presentation. Thank you.
9 MEMBER SKILLMAN: I would like to ask
10 this: we did not talk about the condensate
11 polishing system, which is an integral part of your
12 feedwater system. Why didn't we talk about that?
13 I understood your earlier answer that there were no
14 open items. But what provision do you have in
15 condensate polishing to ensure that a failure in
16 that system does not lead to a loss of feedwater?
17 I see that it is online. The description in your
18 Tier 2 documentation suggests that it is full flow
19 all the time. So, it is downstream of your booster
20 pumps, and from the polishers you get into your
21 condensate pumps. So, I'm curious. I may have
22 that backwards, condensate and booster. But I'm
23 curious why we didn't talk about condensate
24 polishing today.

1 MR. SEO: The condensate polishing
2 system has seven cation vessels and seven mixed
3 units in vessel. During the normal operation, six
4 are cation and six are mixed vessels, are operated
5 at full to purify the condensate. Sixty percent to
6 10 percent are condensate flow ratio.
7 So, the condensate polishing system
8 also can be treated. Some leakage of condensate in
9 the tube. So, to condense tube leakages,
10 therefore, the condensate polishing system, the
11 functional condensate polishing system is --
12 MEMBER SKILLMAN: Will the condensate
13 polishing system be automatically bypassed if there
14 is an upset in the system that prevents full flow?
15 MR. SEO: That's right.
16 MEMBER SKILLMAN: In the bypass?
17 MR. SEO: And the bypass is --
18 MEMBER SKILLMAN: Allows full flow to
19 the rest of the system?
20 MR. SEO: Yes.
21 MEMBER SKILLMAN: Okay. Why is the
22 condensate polishing system in your DCD blocked out
23 with double lines?
24 MR. SEO: Because the condensate

1 polishing system, the basic concept can be
2 performed by DC, the Design Certification case.
3 However, the condensate polishing system is
4 designed by the manufacturer, the condensate
5 polishing system manufacturer. Therefore, there
6 are so many variables. So, we cannot consider the
7 manufacturing design scope. So, we just only
8 consider the concept. Double bracket means concept
9 design information. Therefore, we provide only
10 conceptual design. There is a basic concept.
11 However, the detail of the design is performed by
12 the manufacturer. Therefore, we consider it for
13 only --
14 MEMBER SKILLMAN: Okay. I thank you
15 for that answer. Why isn't the turbine overspeed
16 system conducted that same way?
17 MR. SEO: Turbine overspeed system --
18 MEMBER SKILLMAN: Well, you just
19 explained the reason the polisher system is double
20 bracketed is because it is a concept and there are
21 many ways to purchase this system, which I agree
22 that's accurate.
23 Why isn't the turbine overspeed
24 governor system treated the same way in your DCD?

1 Because it is the identical concept that we spoke
2 about two hours ago.
3 MR. SEO: I cannot explain the answer.
4 MEMBER SKILLMAN: Rob, do you
5 understand what I'm saying?
6 MR. SISK: I do. I'm just checking
7 with our turbine control expert.
8 MEMBER SKILLMAN: Storm, please
9 identify yourself. You have to come to the
10 microphone.
11 MR. KAUFFMAN: Storm Kauffman.
12 As part of trying to assure to the
13 staff that the turbine overspeed system, which we
14 understood the staff viewed as highly important, we
15 felt that it was necessary to provide some detail.
16 As the ACRS has pointed out, we may have gone
17 beyond what is fully necessary, but we were trying
18 to address what thought was a highly important,
19 although non-safety-related system.
20 MEMBER SKILLMAN: Okay. I understand
21 the spirit of your answer. Thank you.
22 MEMBER STETKAR: I've got to get this
23 on the record in terms of this is not the ACRS.
24 These are individual members' comments. The ACRS

1 communicates only through our written letters from
2 the full Committee. So, don't characterize these
3 as ACRS questions or ACRS recommendations or ACRS
4 comments.
5 MEMBER SKILLMAN: One more question,
6 Rob. This gets to probably an obscure system, the
7 steam generator blowdown system. But on your DCD
8 -- this is table 10.4.8-3 -- is a succinct
9 presentation of the codes and standards, the
10 materials, and the inspection testing requirements
11 for that relatively obscure system. I am not
12 suggesting it is not important. I am saying it is
13 relatively obscure in the overall context of NSSS.
14 I can dig that same information out of
15 the DCD going paragraph by paragraph for main
16 feedwater, for condensate, and so on. And so, I
17 would ask, why aren't the codes and standards for
18 the various major components for main feed, aux
19 feed, condensate polishing, presented in a table
20 such as 10.4.8-3? That table presents in one
21 glimpse the critical information about that system.
22 To get that same information for main feed, for
23 main steam, one has to go paragraph by paragraph
24 and interpret it. That is not necessarily

1 inappropriate, but it seems as a tabular form, it
2 actually keeps everybody honest and keeps everybody
3 focused on a set of parameters that is, at least in
4 my judgment, extremely helpful, healthy.
5 MR. SISK: Rob Sisk, Westinghouse.
6 And I do appreciate the comment. It is
7 something we will take back and consider as we look
8 at future revisions to the DCD. So, thank you.
9 MEMBER SKILLMAN: Thank you. Yes, sir.
10 That finishes my comment. Thank you.
11 MEMBER STETKAR: I have a few.
12 CHAIRMAN BALLINGER: Well, we have a
13 little bit of a quandary, in that you indicated
14 that you have a meeting now.
15 MEMBER STETKAR: Yes, but it is my
16 meeting and I'm God.
17 (Laughter.)
18 CHAIRMAN BALLINGER: Okay. Okay. All
19 right.
20 MEMBER STETKAR: So, if I'm not there,
21 the meeting isn't going to happen until I'm there.
22 (Laughter.)
23 CHAIRMAN BALLINGER: In that case, the
24 quandary does not exist.

1 MEMBER STETKAR: And I will try to make
2 this as brief as I can. I'm dyslexic and I might
3 be a dog.
4 (Laughter.)
5 Seriously, the main feedwater system,
6 does the startup feedwater pump receive any
7 automatic signals to start or is it only manual?
8 MR. SEO: No, manual.
9 MEMBER STETKAR: Only manual? Thank
10 you. That was quick.
11 I am curious about the main steam
12 isolation signals. We had some discussion about
13 this earlier. So, I won't reiterate that part of
14 the discussion. The DCD, at least in Chapter 10
15 and Chapter 7, indicates that main steam isolation
16 signal, MSIS, is activated by high-level, greater-
17 than-90-percent narrow range in either steam
18 generator. Now the main steam isolation signal
19 closes the main steam isolation valves for both
20 steam generators, as you would expect, the main
21 steam isolation valve bypass valves, which are
22 normally closed for both steam generators, it
23 closes the main feedwater isolation valves for both
24 steam generators. So now, if I have high level in

one and only one steam generator, I isolate all main feedwater to both steam generators. That is an unusual design. And I was curious about why the design does that.

I'm more familiar with having separate main steam isolation and main feedwater isolation signals, such that if I have high level in a steam generator, I isolate main feedwater to that steam generator and retain main feedwater for the other steam generator.

So, this is obviously an active decision. And I would like to know what analyses were done to justify that decision. Because, from a risk perspective, it may not be the most prudent decision, especially because you only have two steam generators. So, I will just make that comment.

Talk about circulating water, and I have two questions about that. If I look at figure 10.4.5-1, which is sheet 1 of 2, which is the circulating water system, I understand that whether the applicant decides to use cooling towers or whether they decide to take suction from a river or the ocean, that is their business. The number of

1 circulating water pumps is their business.
2 However, if I look at that drawing,
3 outside of the bubble on that drawing shows the
4 individual lines to each section of the condenser.
5 And on sheet 2 of that drawing it shows the
6 connections to the turbine generator building open
7 cooling water system and the return from that
8 system, because the circulating water system, the
9 driving head for the circulating water system
10 provides cooling, provides flow for the turbine
11 generator building open cooling water system,
12 which, in turn, removes heat from the turbine
13 generator building closed cooling water system,
14 which basically cools everything in the turbine
15 building.
16 My question about the figure is that
17 there is on that figure, I think, a crosstie line
18 shown downstream from the discharge isolation
19 valves for each circulating water pump. It is that
20 horizontal line on the figure that has the two
21 things labeled as "manhole" on them.
22 Is that, in fact, a crosstie header
23 that connects all the discharge from all six pumps?
24 MR. SEO: Yes, all six pumps for --

1 MEMBER STETKAR: Microphone.

2 MR. SEO: All six pumps, since six
3 pumps operate, given the normal plant operating
4 conditions, therefore, the condenser water box,
5 these other lines are connected with a common line.

6 MEMBER STETKAR: Good. The size of
7 that line is not so important for the main
8 condenser cooling. It could be important for the
9 turbine generator building open cooling water.
10 Because if I have one particular pump available or
11 two pumps available, I still have to have enough
12 flow through that crosstie header to get to the
13 turbine generator building open cooling water
14 system, which is connected to a specific line.

15 So, is there anything, despite the fact
16 that that is within the COL applicant's scope of
17 supply, is there anything that the COL applicant
18 needs to be concerned about in terms of the size of
19 that header? Or is it just implied that it is a
20 very large header?

21 MR. SEO: You understand the size of
22 our common line, common header lines are based on
23 our APR 1400 experience and the diagram. So, yes.

24 MEMBER STETKAR: Okay. I'll have to

1 think about that. Let me ask the last question I
2 have. I'm not sure that I understand that answer,
3 but I have to think about it.
4 In the discussion about the condenser
5 circulating water system, there is some discussion
6 about turbine building flooding. The statement is
7 made that there is no safety-related equipment in
8 the turbine building. I know the staff had some
9 questions about the turbine building flooding, and
10 I know that the nominal grade level of the turbine
11 building is 100 feet.
12 In the response to one of those
13 questions, you said that the maximum flood height
14 was determined to be 104 feet. So, you can get
15 some elevation above that grade level.
16 Now, again, I have to be careful
17 because I don't know what information is
18 proprietary or potentially security-related. So,
19 let me try to keep this general.
20 I know that there is a non-safety-
21 related switchgear room at an elevation below
22 grade, substantially below grade. Are the doors to
23 that switchgear room watertight? In other words,
24 if I flood, first of all, if I flood the turbine

1 building up to an elevation of 100 feet, will that
2 switchgear room be flooded?
3 The second part of the question is that
4 at grade level there are non-safety-related battery
5 rooms, at least one, and another switchgear room.
6 And if I flood up to the nominal 104-feet
7 elevation, will those rooms be flooded? So, I am
8 asking, basically, questions about watertight doors
9 for those electrical rooms in the turbine building.
10 And I know they are not safety-related electrical
11 rooms, but sometimes non-safety-related electric
12 power can be relatively important.
13 MR. SEO: You understand the flooding
14 condition in the current generator building is the
15 extant condition, such as the breakover, separating
16 water, water rain, or something such as extant.
17 However, the switchgear, non-safety switchgear
18 room, also non-safety, therefore, the provisions
19 cannot perform, does not perform the safety
20 function. So, the extant condition, these
21 provisions are not used. However, the safety-
22 related building or safety-related system can be
23 considered to prevent the damage of flooding.
24 However, I'm not sure the non-safety-related

switchgear room door is watertight or not. We have to check the doors, what type or not.

MEMBER STETKAR: Thank you.

I'm done.

CHAIRMAN BALLINGER: Do I perceive that the questions of the additional sections that weren't discussed have been asked? Good.

MEMBER SKILLMAN: I would like to ask one more. The circ water pumps, there are proposed to be six. And each one of the six pumps has a capacity of 16.6, 6 percent of the design flow of the condenser. That is about 1.4 million gallons a minute divided by 6, plus 25 percent for the turbine generator building closed cooling water heat exchanger. So, the circ water pumps are really dual-function pumps.

What consideration has been given for when you do not need the condenser and you are operating the TBCCW heat exchanger?

MR. SEO: TBCCW system can be used during the plant normal operation, not shutdown condition, not shutdown condition. The circulating water system also can be operated, including the normal operating condition. So, circulating pump,

one circulating pumper can provide some of the TBC system or TBC cooling water. So, that is our design concept.

MEMBER SKILLMAN: Are there provisions in the condenser that the flow passages through the condenser can be isolated from one another, so that you can do tube plugging or condenser maintenance while you are operating TBCCW in a different arrangement?

MR. SEO: As you know, the break line to TBCCW is upstream over condenser, upstream over condenser isolation valve. Therefore, if there is condenser tube leakage or such extant conditions to isolate the condenser water box, in that case the break lines are upstream of isolation, upstream over condenser isolated valve. Therefore, it can be provided, the cooling water, to the TBCCW system. So, the water boxes can be isolated.

MEMBER SKILLMAN: So, yes? Okay. Thank you. Thank you.

CHAIRMAN BALLINGER: Other questions from members?

(No response.)

MR. SISK: If we could --

1 CHAIRMAN BALLINGER: Yes.

2 MR. SISK: -- we wanted to give a
3 couple of clarifications to questions that were
4 asked earlier while we are still on Chapter 10. We
5 did have a couple of simple clarifications.

6 CHAIRMAN BALLINGER: Okay.

7 MR. SISK: One, I would like to ask,
8 Storm Kauffman, you had a clarification on the
9 figure presented for turbine control?

10 MR. KAUFFMAN: Yes.

11 MR. SISK: Please use a microphone.

12 MR. KAUFFMAN: Storm Kauffman.

13 In regards to the reference to John
14 Stetkar on the figure that was applicable, I got
15 the figure numbers confused. The one that I had
16 mentioned, 10.2.2-1, is noted as an example where
17 typical. And you are right, it is inconsistent
18 with the others. We should fix that to eliminate
19 the inconsistencies. So, we will look at doing
20 that.

21 MEMBER STETKAR: Is the intent -- I was
22 more concerned about what the intent is -- is the
23 intent to have a configuration that is shown in
24 10.1-2 where you have two valves in series --

1 MR. KAUFFMAN: Yes.
2 MEMBER STETKAR: -- on four separate
3 lines?
4 MR. KAUFFMAN: Yes, and that is the
5 higher reliability.
6 MEMBER STETKAR: That is, indeed, the
7 higher reliability. Thank you.
8 MR. KAUFFMAN: And just one other item
9 on the questions you asked on excessive detail in
10 10.2.2.3.2, about the mechanical overspeed trip and
11 the infamous interface relay valve. The markup
12 that the staff currently has, in fact, removed
13 those as being excessive detail.
14 MEMBER STETKAR: Okay. Thank you.
15 MR. KAUFFMAN: You're welcome.
16 MR. SISK: And we had one other
17 question that came up that we wanted to simply
18 answer. On table 10.3.2-1, there was a discussion
19 on the dump valve, on what did it mean by
20 controllable capacity. I would like to ask Mr. Tae
21 Han Kim to provide some insight.
22 MR. T. KIM: This is Tae Kim from KEPCO
23 E&C.
24 We got in the controllable capacity for

1 variable ADS. This variable is an electro-
2 hydraulic modulating variable. So, we can adjust
3 it, pass them by to manage the power. So, this
4 means we try to stand by its moderating; we can
5 adjust a certain amount of the controller.
6 MEMBER STETKAR: But my basic question,
7 though, is that the maximum steam relief capacity
8 for each valve is about 1.1 million pounds per
9 hour, 1.1 E to the 6 pounds per hour, for each
10 valve. This controllable capacity, whatever that
11 means, is only 63,000 pounds per hour, a very small
12 fraction of the maximum relief capacity.
13 And I still don't fully understand what
14 that means. Does it mean I can only -- is it the
15 band or is it the maximum -- I don't understand.
16 Let me start again. I don't understand what that
17 smaller capacity means in terms of controllable
18 flow.
19 MR. T. KIM: Without detailed
20 information thrown on me, I can't give you the
21 detailed explanation.
22 MEMBER STETKAR: Okay.
23 MR. T. KIM: But the meaning is we can
24 control the modulating valve to get the power to --

1 MEMBER STETKAR: But, see, I understand
2 if I can control it from fully closed to fully
3 open, at any position in there I can control up to
4 1.1 million pounds per hour.
5 MR. T. KIM: Yes.
6 MEMBER STETKAR: It is not 63,000
7 pounds per hour. And I'm trying to understand
8 that, if these valves open fully for some reason, I
9 understand what they can relieve, but if I can only
10 control them over a short amount of their possible
11 span, that is important for me to understand if I
12 am doing a controlled cooldown at, you know, rates
13 and things like this.
14 MR. SISK: Thank you for that
15 clarification.
16 The microphone is on. Hopefully, it is
17 on.
18 (Laughter.)
19 But thank you for that clarification on
20 that issue. We did want to get a little bit more
21 further down the understanding, and now I think we
22 have a better understanding. It is the difference
23 between the 1.1 and the 63,000 that --
24 MEMBER STETKAR: Yes. I mean, it is a

1 small -- the 1.1 is about 6 percent of full-rated
2 steam flow. So, they are relatively large valves.
3 I can obviously remove decay heat after a plant
4 trip through one of these valves. The 63,000
5 pounds per hour is about -- I don't know; I did the
6 math here someplace -- .35 percent, you know, about
7 a third of 1 percent, which is not very much. I
8 can, indeed, so something, but it will take me a
9 long time to do it.
10 MR. SISK: I understand. Thank you.
11 Those are the only questions we wanted
12 to clarify.
13 CHAIRMAN BALLINGER: Okay. Thank you.
14 We have managed to get ourselves quite
15 a bit behind, which is I think normal,
16 unfortunately. So, I would propose that we recess
17 until 1:15, at which point we will pick up Chapter
18 11.
19 MEMBER REMPE: The staff on Chapter 10.
20 CHAIRMAN BALLINGER: Oh, my goodness,
21 yes. We are actually further behind than I thought
22 we were. So, again, we will start up at 1:15, at
23 which point the staff will present.
24 Thank you.

1 (Whereupon, the above-entitled matter
2 went off the record at 12:19 p.m. and resumed at
3 1:15 p.m.)
4 CHAIRMAN BALLINGER: Okay, we're back
5 in session. We are on schedule if we were in
6 Arizona but we're not in Arizona. We are not on
7 schedule.
8 So, the floor is yours.
9 MR. WUNDER: Thank you and good
10 afternoon. I am George Wunder, a Senior Project
11 Manager in the Office of New Reactors and the
12 Project Manager assigned to Chapter 10. Today, I
13 am joined by Angelo Stubbs and Ryan Nolan of the
14 Plant Systems Branch and by Andrew Yeshnik and Greg
15 Makar of the Material and Chemical Engineering
16 Branch. They will be presenting the staff's SER
17 for Chapter 10, Steam and Power Conversion System.
18 We had a team of ten people working on
19 this chapter and we folks in Licensing are very
20 grateful to all of them for the fine job that they
21 did.
22 At the end of Phase 1, we lost one of
23 our most experienced reviewers to retirement and I
24 would like to give special thanks to Angelo Stubbs,

1 Ryan Nolan, and Dennis Andrukat for picking up his
2 section. Sometimes it is more difficult to pick up
3 someone else's work and take it to completion than
4 it is to start from scratch. So, I think these
5 gentlemen all did a fine job.
6 I would also like to recognize two more
7 project managers, both Jessica Umana and Jim
8 Steckel stepped in while I was out of the office
9 sometimes for several days at a time and they
10 covered meetings and kept things moving. So, my
11 profound gratitude to both of them.
12 During the course of the staff review
13 of Chapter 10 and the associated audit, we issued
14 some 70 RAI questions. These resulted in the 17
15 open items at the end of Phase 2 that we will
16 discuss today.
17 That all being said, I would like to
18 turn it over to the technical staff for their
19 presentation. We will be going through the
20 sections sequentially and we will start with Angelo
21 Stubbs and Section 10.2 on the turbine generator.
22 Angelo.
23 MR. STUBBS: Good afternoon. My name
24 is Angelo Stubbs. I am the Senior Reactor Systems

1 Engineer in the Plant Systems Branch. And I will
2 start today's presentation with a brief discussion
3 on information on the APR 1400 Turbine Control
4 Overspeed Protection System, which is described in
5 10.2 of the DCD. After that, I will summarize the
6 open items that staff identified based on its
7 review and report on the current status of those
8 items.
9 Okay, on this first slide, it provides
10 some general information on how the turbine
11 overspeed protection is accomplished in the APR
12 1400. Some of this we went over this morning but I
13 will just summarize here.
14 In the DCD, the turbine overspeed
15 protection system is described as being made of
16 three independent systems: the normal turbine
17 generating control system, which is assigned to the
18 turbine when it exceeds a rate of speed and two
19 emergency overspeed protection systems, a
20 mechanical overspeed protection system that trips
21 the turbine at 110 percent of rate speed and an
22 electrical emergency trip system which trips the
23 turbine at 111.5 percent of the rate of speed.
24 The use of the combination of a

1 mechanical and electrical overspeed protection
2 system is done to provide diversity and redundance
3 needs of overspeed reduction.
4 In the DCD, there is a significant
5 amount of information discussion in the functional
6 requirements of the turbine overspeed system. But
7 as indicated in the last bullet, which describes
8 the COL item, the applicant included the COL item
9 in the DCD that had the COL applicant address
10 design details and provide them as part of the COL
11 application. This is a first in terms of us
12 reviewing a DCD. When we are looking at turbine
13 overspeed, this is the first time we have had
14 someone come in with a turbine -- describing a
15 turbine overspeed without having selected a turbine
16 and having details on how overspeed protection is
17 accomplished. However, based on the information in
18 the application, there is a lot of information,
19 sometimes pretty detailed information, on how the
20 overspeed was being accomplished. We wanted to be
21 able to take a look at the information and
22 understand how it would be assured that when an
23 applicant came in with a COL application that it
24 would be achieved. Go to the next slide.

1 MEMBER SKILLMAN: Angelo, may I please
2 ask this question? We spent an awful lot of time
3 on a different application design certification
4 that had I want to say copious -- maybe that is an
5 exaggeration -- it had a lot of information about
6 passive heat removal, all kinds of details. And we
7 later learned that what had been communicated in
8 the design cert would not carry the design.
9 Changes were needed.
10 That intersection of finding and detail
11 on the design cert caused a lot of turbulence for
12 the applicant and for the staff. What will prevent
13 a redo of an awful lot of busy work if the
14 requirements that are codified in COL 10.2(2) are
15 found to be not adequate with a different turbine
16 design?
17 And I'm thinking GE has one front
18 standard, Westinghouse has another, Allis-Chalmers
19 had one, Brown Boveri has another. There are
20 variations on the theme. They are all durable and
21 robust machines but they are different.
22 MR. STUBBS: Okay. I think one of the
23 things -- what we are representing here is what was
24 in the original application. And the original

application was pretty open ended on what the COL -- it basically just said the COL will provide the information on turbine control.

Since then, we have got a little bit better understanding of what it is that we would like to see them provide. It was more like here is the SRP. The COL will meet the SRP and by doing that, we will get a satisfactory turbine control.

One of the issues, questions, problems that we had was whether they actually were satisfying 10 CFR 52.47, since no one else had came in in this way in terms of providing the fleet design. And we are still talking with our Office of General Counsel to try to get clarity on that.

MR. DIAS: May I interrupt a little bit? This is Antonio Dias, Plant Systems Branch Chief, NRO. And I completely agree with Angelo.

We were surprised that they were pursuing a COL item approach for the turbine overspeed protection design. We met with them. We discussed it. We felt that it doesn't really even follow Part 52 because Part 52 is very specific of what should be considered a COL which is basically site-specific. And we don't think this qualifies

1 as a site-specific.

2 The applicant said that they still

3 wanted to pursue a COL item. We brought OGC in.

4 OGC heard the two sides of the story. We do not

5 know the final decision of OGC because OGC may say

6 that no, this is not applicable. It doesn't apply.

7 So, this is a pending issue. We don't

8 know the final solution to this. And it was very

9 interesting because earlier today you mentioned

10 about the double bracket. That is called the CDI.

11 And I mentioned to the applicant why don't you try

12 a CDI, instead of a COL item. And they said that

13 no, they prefer the COL item.

14 So, this is where we are right now.

15 MEMBER SKILLMAN: So, the record will

16 show that this is still in a state of flux.

17 MR. DIAS: We don't have a solution.

18 MEMBER SKILLMAN: We're not certain.

19 But you are aware of the issue and OGC is.

20 MR. DIAS: I am aware of the issue,

21 yes. I am waiting for some word from OGC. Because

22 the way we read 52.47(c), it doesn't apply.

23 MEMBER SKILLMAN: Okay. Antonio, thank

24 you.

1 MR. DIAS: Thank you.
2 MEMBER SKILLMAN: Yes, sir. Thank you.
3 Angelo, thank you.
4 MR. STUBBS: Okay. Going over to the
5 next slide. I think we are on the next slide.
6 Okay, now we are.
7 Okay, so when reviewed the DCD, Section
8 10.2, like I said, we found a lot of information
9 what overspeed protection will be designed to
10 accomplish. There are some system features that
11 were included in there. There were terms such as
12 use of triple redundant speed assessors. They talk
13 about using two different, a mechanical and an
14 electrical, ways to detect the performance speed
15 trips. But however, we were unable to find
16 sufficient information to verify the descriptive
17 information that we found in the DCD. So, we issued
18 a number of RAI questions to try to obtain the
19 needed information.
20 The first open item was associated with
21 RAI question 10.2-2. And in that question we
22 requested the applicant provide information on the
23 turbine overspeed protection system, including
24 electrical schematics and logic diagrams on the

1 turbine generator control overspeed protection
2 system, detailed information, functional
3 performance descriptions on control fluid systems
4 in conjunction with the schematics, as well as
5 information on the power source and their locations
6 and how such system components in that single
7 failure consideration is described in our SRP.
8 The applicant responded to that
9 question by indicating that APR 1400 does not
10 identify a specific turbine generator. It provided
11 a revised wording of the COL item and they expanded
12 the COL item to basically have the COL answer the
13 questions that we asked in the COL item.
14 The staff felt that the response did
15 not completely address its concerns and since then,
16 we have held a number of public meetings with them
17 on the issue. As a result, the applicant recently
18 submitted to us in the electronic reading room some
19 updated information, additional information about
20 the system and they referred to some of that this
21 morning. And in that information, some of the
22 information they provided to us was actually
23 included in the presentation that they made to us
24 this morning. But also in the information that

1 they included is markups in the DCD to try to
2 bridge some of the gaps in what was being said and
3 what was being -- well, what was said to us in our
4 actual public meetings and what was actually
5 available in that licensing document.
6 That was fairly recently that we had
7 received that information. We are trying to take a
8 look at it to see whether the available information
9 addressed all of the concerns that we have and
10 whether it is sufficient so that we, the staff, can
11 make a complete determination on it.
12 One of the things we noticed in
13 reviewing the information is that lots of times
14 there is a lot of things that are described and
15 there are a lot of things that there are words for
16 but there is one diagram that they showed us today
17 but often it helps to be able to have some
18 graphical representation of what is going on.
19 So, there doesn't seem to be a lot of
20 that but we are going to take a closer look at what
21 they provided and if the information is complete
22 when they submit on the docket, we will complete
23 our review on it.
24 Okay, let me go to the next. The

1 second item associated with this was also
2 associated with the same RAI number but question
3 10.2-3. And that one we requested that the
4 applicant provide information on manual control or
5 manual trip systems. In that response, they did
6 provide a markup of the DCD that clarified the
7 manual controls and the manual trip system but,
8 again, information that would have been related to
9 actually providing schematics or diagrams, they
10 included -- had that being addressed by the COL
11 applicant by including that and spelling that out
12 in the COL item.
13 Again, we need to see that the complete
14 response on that and we need to understand what it
15 is that the COL can be put into the COL's plate as
16 far as if we do find that COL item is applicable
17 for this review.
18 The third item associated with the
19 details or not having adequate details for the
20 turbine trip block and its configuration. Their
21 response to that was to see their response to the
22 previous question, the response to RAI says see the
23 response to RAI 10.2-2. And we are in a similar
24 situation with that.

1 There may be some additional
2 information that kind of reading over there, based
3 on their last submittal but we haven't had the time
4 to actually evaluate that. We haven't actually
5 evaluated that at this time.
6 And the last open item, question 10.2-
7 4, we requested that they address details of their
8 hydraulic air system associated with any overspeed
9 such as the electrical flow path and shared
10 components failure modes, CCF vulnerabilities.
11 Again, they responded similarly and
12 basically say see the original response, which was
13 the response that expanded the original COL item to
14 have the COL applicant address all of those things.
15 There is more information. They have
16 actually provided more details in the information
17 that was recently submitted to us but it is similar
18 to the information that was presented to the ACRS
19 this morning. And the thing that seems to be
20 lacking is being able to look at the hydraulic
21 system and understanding exactly how it is intended
22 to work, how they expect it to work, and how much
23 it will be -- how much, I guess how much
24 information it will be conveying to the COL

1 applicant as to what they need to provide.
2 So, from the review standpoint, we are
3 a lot further than we were originally but we still
4 have a ways to go in terms of sorting out how to
5 have something that we can do a review of and
6 knowing that -- assuring that when the COL
7 applicant comes in, if there is a COL item and they
8 have fulfilled the COL item, that we will actually
9 be able to make a finding that there is enough
10 information here so that once the COL item, then we
11 are going to have a complete application and we are
12 going to be able to review and determine turbine
13 overspeed protection, whether it has adequately
14 been addressed in the COL.
15 And that's all I really can say about
16 what we have now. If there are questions, I will
17 be happy to answer any questions on that.
18 MEMBER REMPE: I have a question. It's
19 the question I had this morning for KHNP but it is
20 actually the staff, in your draft SE under Section
21 10, you do say on page -- it is the second page of
22 the write-up that the turbine generator is designed
23 for base load operation and has load following
24 capability. Today, I guess I heard that there is

1 an RAI for Chapter 4, which I haven't seen, that
2 basically the staff heck, I guess the conclusion is
3 that KHNP has said we don't want to get this
4 certified for load following.
5 So, did you do any sort of review for
6 its ability to load follow the turbine generator?
7 And if not, maybe that sentence ought to be
8 modified.
9 MR. STUBBS: Okay, we didn't do any
10 review and I don't know how this sentence -- this
11 sentence may be saying that the applicant indicated
12 something or something like that.
13 MEMBER REMPE: Because we are not going
14 to let it load follow here, based on the
15 certification.
16 MR. STUBBS: Right. Right, I
17 understand. We didn't do any review. And as from
18 a regulatory standpoint, having a regulatory basis
19 to ask that question because it is not something
20 that I see as being affecting safety-related --
21 well, it is a non-safety-related system but
22 affecting safety or important safety. I don't know
23 whether we had the regulatory basis to ask that
24 question in that chapter.

1 But you are right, in terms of we don't
2 want to imply that we are backing that statement.
3 It is just a statement that they made and we
4 haven't done a review of it.
5 MEMBER REMPE: Thank you.
6 MR. STUBBS: Okay, if there are no
7 other questions, I would like to turn things over
8 to Mr. Ryan Nolan and he will discuss the main
9 steam system.
10 MR. NOLAN: Thanks, Angelo. So, like
11 Angelo said, I am the reviewer for Section 10.3,
12 Main Steam System.
13 The main steam system for the APR 1400
14 is fairly typical for a large PWR and the applicant
15 this morning has already provided overview. So, my
16 one slide here is focused on the open items.
17 The most significant open item is
18 probably the first one. It is RAI 8570, question
19 10.3-4. And in this question we requested the
20 applicant to explain how the discharge piping of
21 the main steam atmospheric dump valves and the main
22 steam safety valves can perform their safety-
23 related function of discharging steam to the
24 atmosphere, given that its seismic classification

1 is seismic category II.

2 The applicant provided their response

3 and their justification on June 29th. And although

4 the slide says that this is still in evaluation,

5 last week I consulted with our Mechanical

6 Engineering Branch and at this time the staff feels

7 that the classification of seismic category II is

8 not necessarily appropriate for this section of

9 pipe.

10 And I would like to just read the

11 definition or the first half of the definition of

12 seismic category II. And this is the applicant's

13 definition and it is consistent with previous

14 definitions.

15 Seismic category II applies to SSEs

16 which do not perform safety-related function and

17 whose continued function is not required. So, in

18 this case, we feel that discharging the steam to

19 the atmosphere is a safety-related function and

20 this discharge piping absolutely is required post-

21 earthquake. So, this remains an open item and

22 further interaction with the applicant will be

23 needed to resolve this.

24 MEMBER SKILLMAN: Ryan, I would observe

1 that the downstream piping off of the PORSVs was
2 classified the same way. As I recall in Chapter 5,
3 the downstream piping was not safety and it was not
4 seismic. And it seems to me that this is
5 indicative of a choice of quality classification
6 and safety classification that may not reflect
7 current standard in the United States. So, I think
8 this is one worth hanging onto.
9 MR. NOLAN: Yes, I appreciate that
10 feedback. I will take a look at it. I know I
11 looked at previous design certifications and this
12 section of discharge piping is safety-related, at
13 least until it gets out of the structure.
14 Another concern worth discussing with
15 the mechanical engineering branches, seismic
16 category II is used more for seismic interaction
17 where you don't want this non-seismic pipe to rip
18 off of a wall and somehow interact with something
19 that is safety related. That does not preclude the
20 pipe from becoming crimped or something along those
21 lines. And in that case, this system would not be
22 able to perform their safety function, if it were
23 crimped.
24 MEMBER SKILLMAN: Well, my experience

is this is part of decay heat removal.

MR. NOLAN: Yes.

MEMBER SKILLMAN: And decay heat removal just happens to be Section III, Class 2, Seismic I, at least it has been for many years on a lot of plants.

MR. NOLAN: Yes, I think for this applicant they make the class break at the valve. They just don't include the exhaust pipe.

MEMBER SKILLMAN: The tail pipe.

MR. NOLAN: Yes.

MEMBER SKILLMAN: Okay.

MR. NOLAN: The second open item is question 10.3-5. And this is where we requested the applicant to describe all the flow paths that branch off of the main steam line between the main steam isolation valves and the turbine stop valves. And this is discussed in the SRP.

The response was received on June 23rd. And again, although it says it is under evaluation, I took a quick look at the response and it seems to address the information that was requested in the RAI.

And then the last open item is question

1 10.3-6 and we requested the applicant to include in
2 the DCD the elements of a procedure that would
3 address the potential water, in this case steam
4 hammer, consistent with NUREG-0927. And this
5 response was received June first and we did find
6 this response to be acceptable. The DCD will be
7 revised to include the specific elements to address
8 water hammer considerations in the operating and
9 maintenance procedures. And that is a COL item, of
10 course.
11 So, that question is considered
12 resolved and closed.
13 This concludes my portion of the
14 presentation. If there are no more questions, I
15 will turn it over to Andrew Yeshnik to talk about
16 10.3-6.
17 MEMBER RAY: Before Andrew goes on, I
18 just wanted to insert something before I forgot
19 about it. It really has to do with your
20 colleague's prior comments.
21 It seems to me like we have a
22 responsibility to the agency to be clear about what
23 we have reviewed and not reviewed. And on this
24 issue of load following, there can be safety

1 implications if you get into xenon oscillation,
2 things having to do with core stability. And if we
3 are not going to review it and if the application
4 says it is a capability that exists, we at least
5 ought to say we didn't review it. So, I want to
6 make that point for whatever value it may have as
7 an individual input.
8 If we are not reviewing it, fine. We
9 are not reviewing it and it is not part of the
10 certified design. But the application says
11 something and we have to respond to it, it seems to
12 me.
13 MR. STUBBS: Yes, and I agree with you.
14 I think with the load following there is two
15 different things we are talking about. We are
16 talking about turbine and we are talking about
17 reactor. And we need to make it clear in our
18 section that even if the turbine load following is
19 not something that we review.
20 MEMBER RAY: Well, yes, whatever we
21 didn't review. In this case, since it is something
22 that has been said and we have heard what the
23 applicant has to say about that description, it is
24 not their intent that it be part of the

1 certification. But given that it is stated the way
2 it is, we should say we didn't review it, just to
3 be really clear.
4 MR. STUBBS: Okay.
5 MR. YESHNIK: Hello. My name is Andrew
6 Yeshnik. I am a materials engineering in the
7 Materials and Chemical Engineering Branch and I am
8 here to talk to you today about the steam and
9 feedwater system materials.
10 There are five open items on this
11 section. Two of those open items are pretty much
12 confirmatory items at this stage. It was just the
13 timing of the submittal that they were open. So, I
14 would like to just briefly go over these.
15 The first open item, which is question
16 10.3.6-24 involves the use of the ASME Code case N-
17 597-2 on the Flow-Accelerated Corrosion Program.
18 The applicant has submitted a response and the
19 response is to add a statement on compliance in the
20 COL item.
21 The second question, which is 10.3.6-25
22 regards the pre-screening of systems out of the
23 Flow-Accelerated Corrosion Program. The applicant
24 has responded that they will remove the sentence

1 that pre-screened them so every system will go into
2 the program.
3 The third open item --
4 MEMBER SKILLMAN: Andrew, let me ask
5 this. This is maybe not the exact place to ask the
6 question but it is either this one or the next.
7 What attention has the staff given to
8 this idea that all the Class 1 systems are 60-year
9 design life and the Class 2 are 40-years design
10 life?
11 MR. YESHNIK: Well, I did not review it
12 as part of my review. I reviewed the 40-year life
13 that they stated in that section.
14 MEMBER SKILLMAN: But the document that
15 is the overarching document for the design cert is
16 a 60-year design life. So, why is 40 years
17 acceptable or why wasn't that challenged?
18 MR. YESHNIK: The reason I did not
19 challenge it is that I did not know that the rest
20 of the system was the 60-year design life. It was
21 not apparent in the document.
22 MEMBER SKILLMAN: Fair enough. It is
23 on the record. Thank you.
24 MR. YESHNIK: Okay, so the third

1 question is related to the use of the chrome-moly
2 steel and the downcomer feedwater control system.
3 We have received a response from KHNP within the
4 last few days and the staff has not had time to
5 review this. Next slide.
6 Question 27 talked about the use of
7 chrome-moly steel in the downcomer feedwater
8 control line and not in the economizer line.
9 Again, this is another question that KHNP has
10 responded to within the past few days and we have
11 not had a chance to review it.
12 The final question, which is 28,
13 involves a previous RAI which is question 10.3.5-
14 20, where the applicant removed piping -- why they
15 changed piping diameters and removed fittings,
16 valves, and flanges from a table in the FSAR. And
17 there was no justification provided why they
18 changed that and any effect on any analyses.
19 They have responded and, again, we have
20 not had time to review it.
21 So, are there any questions? Okay, if
22 not, I am going to turn this over to my colleague,
23 Greg Makar.
24 MR. MAKAR: Our review of the steam

1 generator blowdown system includes a variety of
2 topics on design materials, water chemistry, and
3 instrumentation and controls. And the
4 instrumentation, controls, and electronics
5 engineering branch provides support on the review
6 of instrumentation and controls.
7 Our one slide is on the one open item
8 we have, which is related to the description of
9 control signals that close containment isolation
10 valves and, specifically, consistency between Tier
11 1, Tier 2 of the DCD, figures, and tables, and
12 text.
13 There were two process interlock
14 signals that are described in Chapter 10 of the DCD
15 that were not shown in Tier 1 for the containment
16 isolation valves for the steam generator blowdown
17 system. And in addition, the information in
18 Chapter 7 on these control signals for the
19 containment isolation valve did not fully describe
20 -- did not include these or an adequate description
21 of the actuation of containment isolation valves in
22 general or the signals to actuate them.
23 So, the applicant has provided a
24 response and has addressed those two items.

However, there were still some things that were unclear to us. Since the SER was sent to you, we have discussed these items with the applicant. And due to the editorial nature of these questions, we expect that this will be -- we will be able to close this and track the changes to the DCD as a confirmatory item.

MEMBER STETKAR: Greg, I'll bring it up. You heard -- were you hear this morning?

MR. MAKAR: Yes.

MEMBER STETKAR: There were the questions about emergency blowdown. Did you pull that string very much? I didn't read RAIs and all that kind of stuff. It is blowdown but they are citing it -- they are citing it in the context of a multiple tube rupture event, which is not a design-basis accident.

On the other hand, if I am an operator, I don't go out and count the number of tubes that are broken when I am trying to respond to an event. So, therefore, it, in principle, might have implications on a design-basis steam generator tube rupture event. Has anybody followed that at all?

MR. MAKAR: Anybody, I don't know. I

can say the question that came to you that you asked about did not come to me. And I was focused more on equipment capacity, design --

MEMBER STETKAR: I mean I don't know where it would be addressed is the problem. It is part emergency operating procedures. It is part accident analysis, I guess, but they tend to be what they are. It, in principle, ought to be in the PRA and we haven't looked at the PRA and we don't have the details of it anyway. So, I was just curious whether you followed it from your part of it.

MR. MAKAR: I did not.

MEMBER STETKAR: Okay, thank you.

MR. STUBBS: Okay, this is Angelo Stubbs speaking and we are going to continue with Section 10.4.9. The auxiliary feedwater system for the APR 1400 is very similar to one that is currently used by large PWRs. However, one difference is that the APR 1400 safety-related water supply provided by auxiliary feedwater storage tanks that you have heard about earlier and they are located in the reactor building. Being that it takes the water line from the auxiliary

1 feedwater storage tank systems to the condensate
2 storage tanks, there was a need to have technical
3 specifications to address the requirements. And we
4 did find that they included a technical
5 specification in the application for those storage
6 tanks.
7 This section has one RAI -- well, open
8 item associated with it. And it is related to a
9 question that we asked about the reliability
10 analysis. In the application they indicated that
11 they met certain unavailability targets and
12 referenced an analysis or evaluation that was
13 discussed in Chapter 19 of the application. When
14 we looked at Chapter 19, we couldn't find that
15 information. So, we issued an RAI and asked them
16 to provide us with the information or tell us where
17 it was available.
18 In response to that RAI, the applicant
19 provided us with a table of reliability numbers but
20 it wasn't -- it still didn't answer our question of
21 how it was developed. And the reference to Chapter
22 19 was deleted.
23 So, we have talked to them -- we have
24 let them know since then that there was a problem

1 with the response and we talked with our PRA group
2 and they have indicated now that the information is
3 available in the electronic reading room and our
4 PRA branch recently begun to look at it. And they
5 confirmed that the reliability study is in the
6 electronic reading room and they are reviewing it
7 and that will be part of the presentation in
8 Chapter 19, when they make their presentation to
9 ACRS.
10 MEMBER STETKAR: Angelo, why is the
11 staff obsessed with a reliability analysis of the
12 auxiliary feedwater system?
13 MR. STUBBS: It is not that the staff
14 is obsessed with it.
15 MEMBER STETKAR: I'm sorry. You asked
16 several RAIs. Why is the staff obsessed -- let me
17 finish -- with a reliability analysis of the
18 auxiliary feedwater system when they don't care at
19 all about the numerical reliability of the
20 component cooling water system, the safety
21 injection system, or any other system in the plant?
22 MR. STUBBS: The RAI was written
23 because it pointed to information in the
24 application that was not there. There was a

1 problem with having information that was being
2 referenced that wasn't in the application and the
3 RAIs were written to try to close that loop and
4 provide an application that was complete and
5 correct.
6 MEMBER STETKAR: You are not answering
7 the question but let me try it one more time. Why
8 is the staff obsessed with a reliability analysis
9 of the auxiliary feedwater system and only the
10 auxiliary feedwater system and not similar
11 reliability analyses of other safety-related
12 systems that might be as important or more
13 important to risk than the auxiliary feedwater
14 system?
15 MR. STUBBS: Okay, I guess it goes back
16 to our guidance. We have specific guidance in our
17 SRP and in the TMI action items that have us look
18 at that when we evaluate the auxiliary feedwater
19 system but the other systems we don't. And maybe
20 that is something we need to --
21 MEMBER STETKAR: That is what I wanted
22 to get on the record because everybody after TMI,
23 because auxiliary feedwater happened to be the
24 system that didn't work at TMI, everybody became

1 obsessed with auxiliary feedwater.

2 I'm not trying to say it isn't an

3 important system. I'm just saying that it is

4 equally as important or unimportant as every other

5 system in the plant. And to focus so much

6 regulatory obsession with that particular system,

7 especially when I don't understand the boundaries

8 of that system, the failure modes, the types of

9 failures that are supposed to be included within

10 whatever that thing that is called the auxiliary

11 feedwater system reliability analysis, I just don't

12 get it. And to require more scrutiny of that

13 particular system outside of the context of the

14 PRA, where the PRA doesn't look at that level of

15 detail itself, the PRA review doesn't.

16 So, I'm glad to hear you say it might

17 be something that the staff might want to revisit

18 because it strikes me that this is an awful lot of

19 time being spent on a number for a system that I

20 don't know what we do with it. What do you do with

21 it once you get the number? The number is good?

22 The number is bad? The analysis was okay?

23 MR. STUBBS: I guess this is one of

24 those numbers that we always get and it generally

falls within the range, you know the ten to the minus four, ten to the minus five range. So, they meet the requirement.

MR. DIAS: If I can say something. This is Antonio Dias again.

Mr. Stetkar, this was something that among the staff and talking to some senior-level management, there was a discussion do we really need it. Unfortunately, we fell into this question, as Angelo described, because it was pointing to something that we couldn't find. That is how the question was initially started. But we think you have a very strong point and we should look into when the revision time for the guidance comes in to question that and probably remove it.

MEMBER STETKAR: Thank you.

MR. STUBBS: Okay, so that's all we have for the open item for Section 10.4.9. We will move to the next slide.

Okay, the last section that we have to go over is auxiliary steam system. And there was, I think, three open items associated with that. The first one was basically to request clarification of actual seismic and quality rule

1 classifications for the system and its components.
2 The applicant has responded to that and
3 they have identified what the non-safety -- well,
4 they stated that non-safety-related piping
5 components that was in the reactor containment
6 building will be classified as Seismic II. And
7 they have provided a markup.
8 So, they basically clarified that the
9 piping in the site reactor building, which its
10 failure might impact safety-related or important
11 safety equipment will be actually designed to
12 seismic category II. And we reviewed that and we
13 found that that would be acceptable and decided we
14 will now be confirmatory, depending on them
15 actually incorporating it into a future revision of
16 the DCD.
17 The second question on this slide was
18 to clarify. And they spoke to this a little bit
19 earlier when they did their presentation,
20 clarification on the buried piping and embedded
21 piping. There was an inconsistency as far as how
22 do you meet the 2014/06, which allows you to have
23 buried piping as long as you minimize -- or
24 embedded piping but actually to minimize the buried

1 and embedded piping.

2 And they discussed that this morning,

3 slightly different from what we had, what was on

4 here. But basically, they are going to use -- they

5 are going to minimize the amount of buried piping

6 and then they are going to use the concrete tunnels

7 and have some leak detection capability, leak

8 collection and detection capability so that they

9 would be aware if there is any leakage through the

10 piping.

11 And that, too, based on our review, we

12 found to be acceptable and that question will also

13 be confirmatory instead of open now.

14 Okay, and we go to the next one. Okay,

15 and the last one is an open item that was

16 associated with -- and this is one of those things

17 where they used COL items and they use it quite

18 often. This was looking at COL item in Chapter 10

19 but it was a COL item that asked them to make sure

20 that there is maintenance and operational

21 procedures for leak detection and contamination

22 control.

23 In general, they are doing this with a

24 number system. They were somewhat inconsistent in

1 how they wrote out the wording in the COL item.
2 And in this case I don't think they actually
3 identified what systems are applied to them. When
4 you get into a Chapter 10.4, there is a number of
5 different systems that this could be applied to.
6 And in some of our other sections, they actually
7 say procedures for this system.
8 So, this is a bigger problem. And the
9 procedures and everything are actually Chapter 12.
10 And when we were looking at the radiological for
11 some of the site-wide procedures and stuff applies
12 to just being able to detect that there is leakage
13 from the plant.
14 So, they presented this also this
15 morning but I think the end result of this is that
16 they recognized that it was -- I guess it is
17 overkill in presenting it everywhere and there are
18 some inconsistencies in the way they have done it.
19 But the COL information items in Chapter 10, they
20 propose to leave unchanged. And I don't know
21 whether the staff made a final decision on this
22 because it covers more than Chapter 10 but the
23 current -- right now it is currently, I guess not
24 completely resolved. It is open. It is not a big

1 issue in terms of what is going on but having the
2 application be consistent and having it make sense
3 is the reason that we are looking at this, whether
4 we need to have procedures duplicated in different
5 places or whether it would be sufficient in one
6 place to cover all the programmatic issues for all
7 the systems is what we are looking at.
8 MEMBER SKILLMAN: Angelo, I would like
9 to make a statement here, kind of in response to
10 your comment that maybe it's not that important.
11 I'm going to hold you accountable just for a
12 second, for an example. John mentioned a couple of
13 hours ago the idea of words matter. Words really
14 matter here. Here's why. We sit around this
15 table, this horseshoe as individuals and later as a
16 committee and consider the totality of this design
17 certification application. And the final
18 application and all of its 19 or 20 chapters plus
19 all of those figures becomes the basis for some
20 future entity to apply to build one of these. And
21 the information comes in three different colors.
22 It is Tier 1, Tier 2 Star, and Tier 2. And the
23 words that we are considering even today are going
24 to end up, in some form, in that final document.

1 And then some poor applicant, six or eight years
2 from now, is going to come in and say I have to
3 make all these departures because I don't really
4 want to do what that says because normally the
5 process is you incorporate by reference, you IDR.
6 And some applicant is going to say I can't
7 incorporate that by reference because I'm not doing
8 that. And when that occurs, there is a departure.
9 And so I would just simply like to say
10 that words really matter. It is important because
11 if what is finally embedded in this document isn't
12 pretty close to the mark in terms of quality and
13 thoroughness, then we are setting the staff up and
14 a future applicant up for an awful lot of busy
15 work. So, it is incumbent upon all of us
16 collectively to get this right the first time. We
17 only got a chance to do it right the first time one
18 time.
19 So, enough of a sermon but you get my
20 point. If we are not careful, we are going to
21 burden the staff and a future applicant with a
22 boodle of work that none of us want to have happen.
23 MR. STUBBS: Okay, I wasn't implying
24 that words doesn't matter. In this case, I was

1 saying that duplication of the COL item we were
2 looking at whether it was necessary to have
3 something that is covering it in Chapter 12 also be
4 implemented in Chapter 9.
5 MEMBER SKILLMAN: But hence, my
6 caution. We need to be circumspect about what
7 these words are, how they are fixed into this
8 document because the final product really matters
9 to someone.
10 MR. STUBBS: I agree.
11 MEMBER SKILLMAN: Thank you.
12 MR. STUBBS: Okay and that covers the
13 auxiliary steam system and I think that concludes
14 Chapter 10.
15 So, if there is any questions, we are
16 able to answer those.
17 MR. WUNDER: That concludes the staff's
18 presentation on Chapter 10. Thank you.
19 CHAIRMAN BALLINGER: Thank you. I
20 guess we need to switch out and pick up Chapter 11.
21 MR. SISK: Okay, just very quickly, we
22 are making arrangements. We noticed two of our
23 speakers don't have name tags but we will add those
24 in shortly to facilitate communication. But we

1 will go ahead and start with Mr. Shagho Kang to get
2 us started on Chapter 11.
3 MR. KANG: Okay, thank you. Good
4 afternoon, everyone. My name is Shagho Kang and am
5 responsible for radwaste system and radiation
6 protection design at KEPCO E&C.
7 Today I am going to talk about DCD
8 Chapter 11, Radioactive Waste Management for APR
9 1400.
10 Before I start, I am so pleased to have
11 this opportunity to present on the Radwaste
12 Management System.
13 MEMBER STETKAR: Mr. Kang, could you
14 either speak louder or pull your microphone closer
15 to you because all of our transcript comes from
16 what you say? So, we have to be sure that it is
17 loud enough. Thank you.
18 MR. KANG: Thank you.
19 Before I start my presentation, I would
20 like to introduce our Chapter 11 team. Sitting on
21 my right is Mr. Irving Tsang, who is from the
22 DERADS Consulting Team. He is a consultant for
23 Radwaste Management System and Radiation
24 Protection. Sitting on my left Mr. Jinkyu Choi is

1 responsible for waste management systems. And Mr.
2 James Jhun, who is sitting here is from back there
3 and so another consultant for the ISE and RMS
4 design. We have a couple more technical staff
5 sitting in the back and they will help us to answer
6 your questions.
7 Now, I am going to move on to the next
8 slide. The contents of the presentation, as you
9 can see are in the same order as that of the DCD
10 Chapter 11. After a brief introduction of Chapter
11 11 and the current NRC staff status, I will
12 introduce the design features of the APR 1400,
13 including radioactive source term, radioactive
14 waste management system.
15 And Mr. James Jhun, on the right, is
16 going to present Section 11.5, Process and Effluent
17 Radiation Monitoring System. And then I will be
18 back to present the design evaluation part and
19 summarize the presentation.
20 For the review of the APR 1400 radwaste
21 management system, KHNP summary DCD Tier 1 and Tier
22 2 Chapter 11. There is no topical or technical
23 report submitted for the review of the system.
24 We have received a total of 34 RAI

1 questions. We have responded to 30. If we include
2 the number of revised responses, which is 25, KHNP
3 submitted a total 55 responses.
4 There are four questions that are being
5 worked on now and all of them are classified as
6 open items. These are items will be addressed and
7 responded by the end of this year.
8 As all of you know, Chapter 11 of the
9 DCD Tier 2 consists of five sections, excluding
10 the sections for COL items and the references.
11 Section 11.1 addresses the radioactive
12 source term and the major systems of the event.
13 And the Sections 11.2 through 11.4 provides design
14 basis system description, radiological assessment,
15 test and inspection requirements of the three
16 different radioactive systems, including liquid,
17 gaseous, and solid waste systems.
18 And the description on the process and
19 effluent radiation monitoring and sampling system
20 is presented in Section 11.5.
21 So, now I am going to start with the
22 Section 11.1, source term. The first part is the
23 RCS and CVCS and the second part is the other
24 systems, including the radwaste system.

1 The two kinds of radioactive source
2 terms are developed and used for the design of the
3 plant. The first one is the design basis source
4 term and the second one is the expected source
5 term. And the design basis source term is
6 developed to use for the design of radioactive
7 waste management system and also for determining
8 the lifetime integrated radiation source for the
9 equipment qualification.
10 We assume one percent fuel defect to
11 determine the design basis source term, based on
12 the SRP 11.2 and 3.
13 In order to calculate the source term,
14 we use mass balance differential equation as is
15 described in CDC. And the reactor coolant source
16 and activity as calculated in the DAMSAM code which
17 was developed by Westinghouse. For the CVCS source
18 term, we used SHIELD-APR code and the input for
19 this code for the RCS source is based on the DAMSAM
20 code calculation.
21 And for the expected source term, this
22 is used for the estimation of annual effluent risk
23 to the environment and the expected source term in
24 the reactor coolant system is based on ANSI 18.1,

1 the version of 1999, which is described in NUREG-
2 0017.
3 And the RCS activities provided in the
4 ANSI 18.1 1999 version was adjusted using the APR
5 1400 specific design parameters.
6 Activity for the CVCS system for the
7 expected source term was already also calculated in
8 the SHIELD-APR code using the expected RCS source
9 term based on ANSI standards.
10 So, now I am going to talk about the
11 BOP and radwaste source systems. Since the steam
12 generators are assumed to have the leaks and the
13 secondary system is considered to contain
14 radioactive sources. In order to calculate the
15 secondary source system, we assume the simulated
16 leakage rate of 0.6 gallons per minute for both
17 steam generators. And the radionuclide in the
18 secondary system are removed by the ion exchangers
19 in the blowdown system and condensate polishing
20 system, as far as by the decay and the leakage of
21 the main steam from the system.
22 The source term calculate for the
23 liquid waste management system started with the
24 determination of input stream to those three

1 different kinds of liquid waste collection pans.
2 The equipment waste tank or EWT collects the
3 leakage from the equipment drains in the auxiliary
4 building and the drains from the component cooling
5 water system. These liquids are relatively clean
6 but their activity is high.
7 The floor drains collected in the
8 building sumps are stored in the floor drain tank
9 or in short, FDT. These liquids contain higher
10 impurities with lower radioactivity.
11 The chemical waste tanks collect the
12 other miscellaneous liquid from the chemical waste
13 drain sump and drains from the turbine generator
14 building.
15 The DIJESTER Computer Code is used to
16 determine the source term in each of the liquid
17 waste management system components, including the
18 pretreatment model and the reverse osmosis and ion
19 exchangers considering the decay and buildup of the
20 radionuclide. The DIJESTER Code was developed by
21 the Sargent & Lundy and used for the licensing of
22 the U.S. plants in the past.
23 MEMBER SKILLMAN: May I ask you to back
24 up one slide, please to the primary source term?

1 I am looking at the Design Control
2 Document and I am in Table 11.1-2. And this shows
3 the radionuclides that are considered in the
4 maximum reactor coolant fission product source
5 term. And this indicates that continuous gas
6 stripping is assumed. What that communicates to me
7 is that you have got a constant bleed from your
8 chemical and volume control tank. You are pulling
9 gas or you are pulling gas out of the pressurizer
10 somehow.
11 My question is what happens if you do
12 not consider continuous gas stripping if, for
13 whatever reason, that stripping capability is
14 absent? What is the consequence on your source
15 term?
16 MR. KANG: So, you are asking about the
17 source term standpoint, not from the system
18 operations.
19 MEMBER SKILLMAN: No, your source term
20 includes continuous gas stripping. What if you do
21 not have continuous gas stripping, if that
22 capability is absent?
23 MR. KANG: If you do not assume the
24 operation of the gas stripper, which is used for

1 the stripping of the gases in the primary system,
2 there is going to be buildup in the system and most
3 of the normal gases in the product coolant will be
4 accumulated and the downstream of the gas vapor.
5 So, the source term for the normal gases will be
6 higher than, assuming the continuous gas stripping.
7 But because we assumed the one percent
8 fuel failure, which is higher than the tech spec
9 actual limits for the RCS system, I think that will
10 have sufficient conservatism in our assumption of
11 the fuel failure rate in Chapter 11.
12 And in Chapter 12 for the design of the
13 radiation shielding and the HBC design, we assumed
14 a more -- a less conservative assumption, which is
15 0.25 percent fuel failure plus without any gas
16 stripping, in order to make up the unconservative
17 of the fuel failure rate.
18 So, we have two different kinds of
19 design basis source term. In Chapter 11, one
20 percent plus continuous gas stripping. In Chapter
21 12, 0.25 percent fuel failure plus no gas
22 stripping.
23 Did I answer your question?
24 MEMBER SKILLMAN: You did. Thank you.

1 Thank you.

2 MR. KANG: Okay, then I will go to the

3 gaseous system. In Chapter 11, we used the term

4 GRS, gaseous radwaste system for the system which

5 processes the gas vented from the CVCS. And the

6 reason we did GWMS, which it stands for gaseous

7 waste management system, which has wider meaning

8 that includes the HVAC system, which controls the

9 airborne activities in the building.

10 So, from now on I am going to use the

11 term GRS for Chapter 11.

12 The GRS system utilizes the charcoal

13 delay beds to provide sufficient decay of the

14 gaseous from the reactor drain tank, volume control

15 tank, equipment drain tank, and the gas stripper,

16 and the CVCS tank. The source term in the GRS

17 components are calculated using the differential

18 rate ratio, considering the decay and buildup.

19 The high-activity spent resins

20 generated in the CVCS system are stored in the

21 spent resin long-term storage tank, which is a part

22 of the solid waste management system and the low-

23 activity spent resin generated in the liquid waste

24 management system and spent fuel pool cooling and

1 cleanup system and the steam generator blowdown
2 system, which has low level of radioactivity are
3 stored in the low-activity spent resin tank.
4 The source terms in these tanks are
5 calculated, consider the decay for up to ten years
6 of storage time.
7 So, if you don't have any questions for
8 this part, I am going to move on to the second
9 part, which is radwaste management system.
10 The design requirements apply to the
11 design of radioactive waste management system are
12 shown in this slide. The high-level requirements
13 are provided in GDC 60 and 61 and 10 CFR 50
14 Appendix A. The concentration limit for the
15 gaseous and liquid affluence at the unrestricted
16 area are defined in 10 CFR 20 Appendix B and those
17 constraints are provided in 10 CFR 50 Appendix I.
18 Details of the system design requirements are
19 provided in ANSI Standard and the Regulatory Guide
20 1.143 and the requirement to minimize contamination
21 is delineated in Reg Guide 4.21.
22 In the liquid radwaste system, the
23 objectives of this system is shown in this slide.
24 The first one is to collect, process and hold the

radioactive or potential radioactive leakage generated from the normal equation, including the anticipated operation occurrence. Also, the system provides sufficient processing capacity, redundancy, and the flexibility to treat the liquid waste in a manner to reduce the radionuclide concentration to the levels that do not exceed the effluent concentration limit, which is defined at 10 CFR 20.

The system is classified as a non-saturated system and a seismic category is designed in accordance with Reg Guide 1.143. And the radwaste cert classification for this system are classified as RW-IIa or RW-IIc. Some components are classified IIa some are the other classified IIc. We don't IIb components for this liquid waste system. All of these classifications are based on Reg Guide 1.143.

And this system utilized reverse osmosis technology to improve the performance and it provides the pretreatment to remove the organic matters or the sustained solids.

The system also provides ion exchangers to remove the specific ions such as cesium and

1 rubidium prior to discharge to the monitoring tank
2 and switches to finer resin tank before discharge
3 to the environment.
4 Here, you can see the flow diagram of
5 liquid waste system. For the collection and
6 storage of the liquid waste, we provide two 18,000
7 gallon EWT, which is an equipment waste tank, and
8 two 18,000 gallon floor drain tank, and two 9,000
9 gallon chemical waste tank.
10 The sizes of these tanks are determined
11 based on the maximum generation rate of the liquid
12 waste, which is provided in ANSI Standard 55.6.
13 This generation rate includes the amount of the
14 liquid waste generated during the refueling outage.
15 For each of the two 100 percent
16 capacity, our packages consist of four different
17 modules which are pretreatment, reverse osmosis,
18 demineralizer, and the R/O concentrate feed
19 modules.
20 The R/O module, followed by the one
21 cation bed and two mixed beds provides a sufficient
22 decontamination factors to meet the design
23 criteria. Each drain has process capacity of 60
24 gallons per minute.

1 The process is liquid collected in the
2 monitor tank samples and their priority determines
3 whether the liquids will be reused or discharged.
4 The process radiation monitor located at the
5 downstream of the monitor pump, it monitors after
6 discharging water which meets the risk criteria.
7 Once it exceeds the discharge limit, it reverts
8 around to the RCR, the radwaste control room, turns
9 up the pump and closes the door automatically.
10 The discharge line with the radiation
11 monitor is the only path that discharges the
12 processed liquid to the environment.
13 MEMBER SKILLMAN: Before you change
14 this slide, as we view this image, should we be
15 thinking that this is the same system that is in
16 use in Korea today?
17 MR. KANG: Exactly. We use the same
18 system.
19 MEMBER SKILLMAN: And what has your
20 experience been with this system?
21 MR. KANG: Actually for APR 1000, we
22 started to use the system for the Shin-Kori Unit 1
23 and 2, which is APR 1000. Before the construction
24 of this plant, we are hoping to use different

technology, other than --

MEMBER STETKAR: Can you speak up and make sure that we can hear you?

MR. KANG: Okay, for Shin-Kori 1 and 2 we didn't develop much experience because it was new R/O but based on our previous that the test and operating history of the other plant which used the RO, we think that it has high performance much rather than the evaporators, which has a long period outage time and it also has high decontamination factors to remove the radionuclides. That is why we selected the system, based on previous experience of the other technology.

MEMBER SKILLMAN: Thank you.

MEMBER STETKAR: I've got a question. Leave it up there for a second. You did not show on this figure the detergent waste treatment system and I noticed that the certified design does not include a laundry facility. You state clearly that depending on site-specific requirements, the COL applicant is to determine whether contaminated laundry is sent to an off-site facility for cleaning or for disposal.

1 In section 11.4, you say the current
2 design provides for the collection and packaging of
3 potentially contaminated clothing for offsite
4 shipment and/or processing.
5 Now, if I don't want to package all of
6 the contaminated protective clothing and ship it
7 off site because I don't particularly like to do
8 that and I would rather launder it inside my plant,
9 I couldn't find any space in the compound building
10 for a laundry and I would like to know how the
11 provision of a laundry would affect your storage
12 capacity requirements for things like the size of
13 your detergent waste storage tanks, the flow
14 capacities through your liquid waste system,
15 whether that would affect the design of the reverse
16 osmosis modules because you would be processing
17 more fluid, monitor tank capacity and even layout
18 of the compound building itself.
19 So, why don't you have a laundry in
20 this facility?
21 MR. KANG: So, we have a separate
22 system from the liquid waste management system,
23 which is called detergent waste management system
24 which is not shown in this figure. If you look at

1 the DCD Tier 2 Chapter 11, you will see a figure
2 which shows the diagram of the detergent waste
3 treatment system. That is why we didn't take into
4 account the amount of waste which will be generated
5 by the detergent system.
6 To tell the truth, for the domestic
7 design, we have a specific boundary system but this
8 detergent waste system which is described in our
9 DCD was actually the laundry system in the domestic
10 plants. So, we have laundry, which is processed
11 on-site, not shipped out for the offsite treatment.
12 So, the detergent waste treatment system is
13 actually was designed to process the laundry.
14 MEMBER STETKAR: And it is large
15 enough, the tanks --
16 MR. KANG: Based on our experience, our
17 laundry system has enough capacity to handle all
18 the waste, laundry waste.
19 MEMBER STETKAR: Okay, including -- you
20 know I understand how the detergent waste system is
21 configured. And that includes conditions where you
22 do have to divert the detergent waste into the
23 reverse osmosis system for treatment or do you
24 typically have low enough contamination that you

1 can basically dilute it and send it directly
2 offsite?
3 MR. KANG: Well once we do not exceed
4 the risk criteria from the laundry system, after we
5 sample and monitor it, we send it out.
6 MEMBER STETKAR: You just send it out?
7 MR. KANG: Yes and in the existing
8 criteria, it is sent out to the chemical waste tank
9 in the --
10 MEMBER STETKAR: Right, and it is
11 processed through the drawing here.
12 I don't know what amount of operating
13 experience you have, especially during outages,
14 where you are probably generating a fairly large
15 amount of low contaminated protective clothing. Do
16 you find that you are diverting a good fraction of
17 the laundry waste to the chemical waste tank and
18 processing through the radioactive waste liquid
19 processing system?
20 MR. KANG: Even though I cannot give
21 you the exact number how much if there was a waste,
22 I mean the laundry waste is sent to the LWMS system
23 for further processing. I think the amount is
24 pretty much can be processed at the LWMS system.

1 That is how we designed the size of the system.
2 MEMBER STETKAR: All right. Where is
3 there space in the certified design compound
4 building for a laundry if I wanted to put in a
5 laundry? And again, I don't want to get into --
6 the layout drawings are listed as sensitive
7 information. So, I don't need a specific place.
8 But believe me, I looked for floor space and I
9 couldn't find it.
10 MR. KANG: Can we capture the question
11 and get back to you?
12 MEMBER STETKAR: Okay, that's fair.
13 That's fair. Thank you.
14 MEMBER CHU: Question. You know at the
15 end of your flow diagram, you have four places to
16 go: plant discharge, reverse osmosis, reuse, and
17 so on and so forth. Roughly, what percentage of
18 your liquid waste goes to the plant discharge?
19 MR. KANG: Plant discharge, you are
20 asking the operating experience. The design can
21 accommodate all different four places but --
22 MEMBER CHU: Yes, from operational.
23 MR. KANG: Operation standpoint, can
24 you --

1 MEMBER CHU: I'm just curious to see.
2 MR. KANG: Okay. Actually for the
3 design evaluation to capture an offsite dose, you
4 assume that 100 percent of the processed liquid is
5 discharged directly into the environment because
6 that is the most conservative. And from the
7 operations standpoint, Irving, can you answer?
8 MEMBER CHU: Well, from the design
9 perspective, you have all these other paths.
10 Now, where does the reverse osmosis
11 reuse go?
12 MR. TSANG: My name is Irving Tsang.
13 At the request from Mr. Kang, I will attempt to
14 answer your question.
15 Let me just rephrase your question so
16 that I understand where you are coming from.
17 The first part of your question
18 referred to, in terms of the relative percentage,
19 how much we are discharging and how much we are
20 reusing within the plant. That is the first part
21 of the question.
22 MEMBER CHU: Yes.
23 MR. TSANG: The reuse of the radwaste
24 treated effluent highly depends on the plant water

1 balance, on how much can be reused and it also
2 depends on the quality of the treated effluent.
3 Once we realized that the water is
4 treated well and relatively free of high-level
5 contaminant and can be reused for flushing pipes or
6 something like that, we will plan to reuse.
7 But in terms of percentage standpoint,
8 the majority of the waste will be discharged.
9 MEMBER CHU: Okay.
10 MR. TSANG: Does that answer your
11 question?
12 MEMBER CHU: So, this just allows for
13 design options.
14 MR. TSANG: Yes, this is only a
15 capability we have built into the design to
16 facilitate reuse.
17 MEMBER CHU: Okay, thank you.
18 MR. KANG: So, then, I can move onto
19 the next slide.
20 Now, I am going to talk about the
21 gaseous waste management system, GRS system here in
22 Chapter 12.
23 The purpose of this system is to
24 collect, process the radioactive waste gases during

1 normal operation and its ultimate goal is to make
2 the gaseous effluent rate limit during normal
3 operation and AOO. The system is also classified
4 as non-circulated system and its seismic category
5 is same as before.
6 And all the components in the GRS
7 system is classified as RW-IIa per the Reg Guide
8 1.143. This systems uses charcoal delay baths for
9 the delay and decay of the radioactive nuclides.
10 It provides the sufficient capability to delay the
11 genome gases from not lasting 45 days and it
12 prevents the radiation of charcoal delay bed using
13 the chilled water control and the moisture removal
14 method. It provides the gas concentration monitor
15 and alarm to prevent hydrogen explosion.
16 The system also provides isolation
17 barrier in the compound building HVAC doors to
18 close automatically on the receipt of high
19 radiation level indication.
20 This figure shows the flow diagram of
21 GRS system. As mentioned earlier, the GRS process
22 radioactive gases transfer from the CVCS vents and
23 the gas stripper.
24 The capacity of this system is 22

1 standard scfm, which is sufficient to process the
2 inlet flows. The GRS header drain tank collects
3 the condensed liquid in the GRS in the piping and
4 the waste gas dryer controls the moistures and the
5 temperature to assure the performance of the
6 charcoal delay bath. The charcoal guard bed is
7 used to protect the charcoal delay beds from
8 moisture and to capture the iodines.
9 Of the two 100 percent system, only one
10 frame is operating and the other one is in standby
11 condition or regeneration mode.
12 The four charcoal delay beds are
13 normally operating in a series a total of 21,000
14 pounds of charcoal provides 45 days of decay for
15 genome 3.5 days for krypton nuclides. The
16 particulates and charcoal fines are trapped in the
17 HEPA filter before they are discharged to the
18 downstream of air cleaning unit of the compound
19 building HVAC system.
20 MEMBER STETKAR: Leave that up for a
21 moment. I have a few questions on the gaseous
22 waste system.
23 As I read the DCD, in some places it
24 acknowledges that there is only a single isolation

1 valve at the discharge to the ventilation exhaust.
2 In other places, it uses the word valves, plural.
3 I think there is only one valve. Is that correct?
4 MR. KANG: You mean the isolation valve
5 at the discharge line?
6 MEMBER STETKAR: That's right. If I
7 look at, in particular figure 11.3-1 in the DCD, it
8 is valve 008 on that figure. And it gets high
9 radiation signals and also low flow signal from the
10 ventilation exhaust.
11 For the liquid waste system, I
12 confirmed that there are, indeed, redundant and
13 diverse means of isolating a liquid discharge. In
14 particular, high radiation signal closes the single
15 discharge isolation valve and it trips the monitor
16 tank transfer pumps so that if the discharge valve
17 fails to close, at least the transfer pumps are
18 stopped.
19 If I have a high radiation on a gaseous
20 discharge and valve 008 does not close, how do I
21 stop the gaseous discharge?
22 MR. KANG: Okay, you want to answer his
23 question?
24 MEMBER STETKAR: You can take that back

as a question, if you want to. I was just looking as a diverse way.

Also, I noted on that same figure, 11.3-1, that there is a full flow bypass line around that discharge valve with a manual, normally closed manual valve number V-1015. Because that is a manual valve, if that valve is open, I cannot isolate the discharge flow. So, I was curious. When do I open that valve? When during normal or abnormal operations would that valve be open?

MR. KANG: We understand your concern and we will take it back.

MEMBER STETKAR: Okay. Let me just make a note because I don't remember anything.

Another thing that I noticed and you have to forgive me because it has been a long time since I had any direct operating experience but in a lot of the plant designs that I have seen, there is a gaseous waste holdup tank or a storage tank or some collection tank where I can accumulate gas, if, for example, my processing line is down or if I am generating more gas than I can effectively process in the time constants. This design doesn't have one of those. Why? Does it not have a

storage tank or a holdup tank?

MR. KANG: Irving, can you answer this question, please?

MR. TSANG: John, my name is Irving Tsang, again, and I will attempt to answer your question.

And I do agree with you. And I work on the APWR Design Certification. I have sat in front of you and we have the gaseous tanks.

MEMBER STETKAR: And it's not -- I didn't want to bring up another specific new plant design certification. It has been my experience looking at a large number of currently operating plants, regardless of how they clean up the gas, whether it is charcoal beds or whether it is another type of technology. I think pretty much every one that I have seen has some sort of tank there to collect gas.

MR. TSANG: I'm sure you have more experience. I have been working with nuclear power plants and using the Westinghouse technology versus the combustion engineering technology. And similar to the other application that we have, we have surge tanks.

1 MEMBER STETKAR: Yes.

2 MR. TSANG: And utility would prefer to
3 have surge tanks. However, this design, the AP1400
4 design has the capacity is very large in terms of
5 the charcoal buildup -- the charcoal retained in
6 the delay beds.

7 And Mr. Kang earlier mentioned that the
8 design flow rate is roughly 22 scfm and normal
9 generation rate is around 1.0, 1.2.

10 MEMBER STETKAR: Do you just
11 essentially rely on the charcoal beds themselves as
12 your surge capacity, if you will?

13 MR. TSANG: Yes.

14 MEMBER STETKAR: I mean it is not a
15 surge capacity. It is just increased processing
16 capacity.

17 MR. TSANG: Right.

18 MEMBER STETKAR: Okay. Again, the
19 question comes up. Do you have any operating
20 experience to show that that is adequate? I mean
21 from real life.

22 MR. TSANG: A few of the Westinghouse
23 design plans did not have the surge tanks.

24 MEMBER STETKAR: Okay.

1 MR. TSANG: So, I'm sure they rely on
2 the charcoal delay beds --
3 MEMBER STETKAR: Okay.
4 MR. TSANG: -- to take care of the
5 surge.
6 MEMBER STETKAR: I haven't seen those.
7 It has been a long time since I operated and,
8 believe me, I have not seen every plant in the
9 world.
10 MEMBER SKILLMAN: Let me ask this,
11 please. I'm on Tier 2, Chapter 11, page 11.4-12.
12 And the statement that I am going to refer to is
13 about a third of the way up from the bottom of the
14 page. And the sentence is: Charcoal used in the
15 GRS is not expected to be replaced. Therefore,
16 spent charcoal waste is not generated routinely.
17 Two questions. Is this a 40-year
18 system or a 60-year system?
19 MR. TSANG: The design is certified
20 based on the 40 years of operation.
21 MEMBER SKILLMAN: Forty years, okay.
22 So, then if it was a 60-year system, what I am
23 going to say next is even more important. That is
24 a long time. What confidence do you have that the

1 charcoal will remain effective for four decades or
2 six decades?
3 MR. KANG: Mr. Tsang can answer this
4 question.
5 MR. TSANG: My name is Irving Tsang.
6 You can see from the flow diagram that there are
7 two key pieces of components to protect the
8 charcoal delay bed and the charcoal delay beds, the
9 charcoal is very susceptible to moisture damage
10 and, therefore, in the design, we put in dual
11 safeguard components, meaning the gas dryer and
12 also the guard beds to protect the delay bed.
13 And so that is the protection that we
14 have implemented in the design to make sure the
15 performance of the delay beds can endure the
16 duration for the plant operation.
17 The design also has provisions if,
18 indeed, we cannot -- if the charcoal performance
19 degraded into such an extent that it needs
20 replacement, the design included the capability to
21 replace the charcoal.
22 The delay bed can be isolated and the
23 charcoal can be replaced using a vacuum system and
24 other means for that.

1 MEMBER STETKAR: Well but the certified
2 design says the COL holder has to figure out how to
3 do that.
4 MEMBER SKILLMAN: That's not a small
5 task.
6 MEMBER STETKAR: No.
7 MEMBER SKILLMAN: But I understand your
8 answer and I thank you. Okay?
9 CHAIRMAN BALLINGER: Is there any
10 experience in Korea with this kind of arrangement,
11 where you have got historical data that says that
12 at least you can extrapolate this to 40 or 60
13 years?
14 MR. KANG: We've been using this
15 technology for many years for the domestic plants.
16 CHAIRMAN BALLINGER: So what you are
17 saying is you do have experience for long periods
18 of time.
19 MR. KANG: Yes, for a long period of
20 time.
21 MEMBER SKILLMAN: I'm just reminded of
22 experience that I've had where to conform with
23 technical specifications, it was necessary to test
24 the charcoal using dioctyl phthalate. And unless

1 the testing was done very, very carefully, the DOP
2 test or dioctyl phthalate could end up injuring
3 the charcoal. And if you didn't do the test
4 properly, you could end up wasting the charcoal bed
5 and have to replace the charcoal beds. And I'm
6 presuming that there is a tech spec that will
7 require confirmation that the charcoal delay beds
8 are performing the way that they are supposed to be
9 performing but I will leave that to the COL holder
10 to figure out how to take care of that.
11 MR. TSANG: Again, I'm Irving Tsang. I
12 think your comment is very accurate and we
13 appreciate that. I don't know enough to respond to
14 whether this is a tech spec issue, quote tech spec,
15 but there is technical specs for the procurement of
16 the charcoal to ensure.
17 MEMBER SKILLMAN: Thank you.
18 MEMBER STETKAR: Before we switch to
19 solid waste management, I just need to make one
20 comment. It is partially related to gaseous waste
21 management but only partially. I was trying to
22 understand the sources of input to the gaseous
23 waste management system and I think I understand
24 them. I think I know where the sources are. But

while I was doing that, I went to look for some of the usual suspects out in the nitrogen and hydrogen systems. And when I looked for those systems in Chapter 9 of the DCD, I noted that there is absolutely no flow diagrams for the high pressure and low pressure nitrogen systems or the hydrogen system. That is very, very unusual. It is particularly unusual because the nitrogen systems do, in fact, interface with safety-related equipment. They have containment isolation valves.

So, once we get to Chapter 9, I am going to be really curious about those systems. I don't really know. I have never seen a design certification that hasn't had at least a basic flow diagram for those systems.

I couldn't even -- it is difficult to even find a list of the things that are supplied with nitrogen. I have a list but I have no confidence that it is complete.

MR. KANG: So, I don't have the --

MEMBER STETKAR: I did notice, by the way, that you have a diagram of the surface air system, apparently because it has a containment isolation valve. This is a more general comment on

1 the completeness of the documentation for a
2 certified design and it is not complete.
3 MR. KANG: I'm not sure why the system
4 is not described in Chapter 11.
5 MEMBER STETKAR: I'm not sure why it
6 isn't and it is not relevant to today's discussion
7 but will be relevant whenever we get to Chapter 9.
8 It's just I wanted to get it out there so you are
9 aware of the question when we get to Chapter 9.
10 MR. KANG: Okay, thank you.
11 For the solid waste management system,
12 the objectives of this system are to provide the
13 storage of spent resins handled and packaged spent
14 filters, dried and packaged reverse osmosis
15 concentrate and to sort and compact the dry active
16 waste. Dewatering and packaging of spent resins
17 will be provided by the COL applicant.
18 Classification of the solid waste
19 system is similar to the previous two systems,
20 which are non-safety and the seismic classification
21 by Reg Guide 1.143 and the radioactive safety
22 classification with RW-IIa.
23 The design features were described in
24 the last bullet. The spent resin long-term storage

1 tank is designed to store high activity spent
2 resins for up to ten years, as I mentioned earlier.
3 And the low active spent resin tank is provided to
4 store the low active spent resins.
5 The filter handling subsystem is used
6 to remove, move and package the spent filters. The
7 R/O concentrate treatment system dries the R/O
8 concentrate in drums. The system also provides a
9 sorting table and compactor to reduce the volume of
10 dry active waste.
11 And the DC standard design provides a
12 space and guidance for the COL applicant to process
13 the spent resins.
14 MEMBER STETKAR: Let me ask you about
15 the -- it has different names in the DCD so I will
16 get a the long-term decay storage tank. You noted
17 that it is designed with sufficient capacity to
18 store high activity spent resins for up to ten
19 years. And the statement in the DCD says that it
20 is high activity spent resin storage tank is
21 designed to provide sufficient storage for ten
22 years but to facilitate long-term decay,
23 parenthesis from zero to nine years, before the
24 resin is packaged and shipped. And zero is a

1 really small number. So, it is not clear to me how
2 zero years is a long-term decay.
3 What actual technical basis do you have
4 for the size of that tank? It is 3,185 cubic feet,
5 which is not a small tank but it is not a huge
6 tank. Plus this is an aqueous solution that is
7 before it is dewatered. So, it has got a lot of
8 water in it.
9 What is the basis for that size? That
10 is the first part of the question.
11 The second part of the question is how
12 are you characterizing zero to nine years as long-
13 term decay?
14 MR. KANG: Okay, if I answer the first
15 question, the size of the tank was determined based
16 on the amount of the resins from the CVCS generate
17 for ten years.
18 So, if you look at the table in 11.4,
19 you can see the amount of generation rate of spent
20 resin, annual generation rate. The size was
21 determined based on that amount. And we assumed
22 that ten years of operation would have that spent
23 resins.
24 And the question why we used the word

1 zero to nine years because the shielding of the
2 system should be based on the last years'
3 generation of the spent resin, which it was not
4 decayed at all at the time we generate the resin.
5 We have to have the facility in terms of the source
6 term of the spent resin. That is why we used the
7 word zero to nine years of generation.
8 MEMBER STETKAR: Oh. I mean it makes
9 sense when I think about it in terms of shielding.
10 It doesn't make sense when I think about in terms
11 of zero years of decay but thanks.
12 Do you have any operating experience to
13 confirm the fact that you generate less than the
14 amounts of spent resin that you are assuming in
15 your design?
16 MR. KANG: You are asking how much
17 spent resin we generate compared to the size of the
18 current design?
19 MEMBER STETKAR: Yes.
20 MR. KANG: Mr. Irving can answer the
21 question.
22 MR. TSANG: John, I'll try to answer
23 that question. Again, most of the Korean operating
24 plant, I was looking at Shin-Kori 3 and 4 and also

1 Shin-Hanul 1 and 2 designs, and they have the same
2 design as this one, except for the fact that they
3 have two long-term spent resin storage tanks with
4 dual units.
5 So, that is based on their experience.
6 MEMBER STETKAR: But do you have enough
7 experience in terms of actually processing resin
8 yet to know how much throughput to expect over a
9 ten-year period, let's say?
10 I only ask this because, again, it is
11 old news but I worked at the Zion Nuclear Plant
12 which, at the time, was Westinghouse's preeminent
13 four-loop, state-of-the-art pressurized water
14 reactor, and I will tell you that we were so
15 constrained on the backend of our waste processing
16 process that it caused real problems for us. We
17 had not enough storage capacity. We had not enough
18 processing capacity. We had getting rid of resins
19 was a real challenge because we couldn't process
20 them.
21 So that is, from a design and
22 operational perspective is why I am kind of asking
23 these backend questions, if you will.
24 MR. TSANG: I fully comprehend the

1 question. This is Irving Tsang again.
2 I fully comprehend the question.
3 MEMBER STETKAR: And if you do, indeed,
4 have operating experience, like you mentioned maybe
5 with the charcoal beds and things like that, it
6 would help to provide some confidence when I think
7 about the volumes that you are processing and how
8 you are extrapolating from actual operating
9 experience to this size of a plant and with its
10 commensurate amount of volume.
11 MR. TSANG: Mr. Kang and I will table
12 this question and discuss with KHNP.
13 CHAIRMAN BALLINGER: Because Shin-Kori
14 1 and 2 are half the size of this, right?
15 MR. KANG: One and two?
16 CHAIRMAN BALLINGER: Yes.
17 MR. KANG: One thousand.
18 CHAIRMAN BALLINGER: Oh, they are 1000.
19 Okay.
20 MEMBER STETKAR: Yes, they're not --
21 CHAIRMAN BALLINGER: No, I'm thinking
22 of --
23 MEMBER STETKAR: I mean you are never
24 going to know until you actually operate how much

1 stuff you have.

2 CHAIRMAN BALLINGER: I'm thinking of

3 Kori 1 and 2, not Shin-Kori.

4 MR. KANG: So, thank you. So, I am

5 going to move on to the flow diagram of solid waste

6 management system. This figure shows a simplified

7 diagram for the system. There are five subsystems,

8 as I mentioned: spent resins, spent filter, DAW,

9 R/O concentrate subsystem, and temporary storage

10 subsystem are shown in this figure.

11 The spent resin with the low active

12 spent resin from RWMS spent fuel pool cooling and

13 cleanup system and general blowdown system are

14 transported to the low active spent resin tank and

15 those with the high activity from CVCS are sent to

16 spent resin long-term storage tank using the

17 demineralized water.

18 The spent resin storage tank has

19 sufficient volume to store the resin for up to ten

20 years and the storage in the tanks, after the

21 storage in the tanks, the resins are transported to

22 the mobile spent resin treatment system for

23 dewatering and packaged in the high-activity

24 container or HSE for temporary storage prior to

shipment.

The spent filters are remotely removed through a shielded plug and transferred to the capping in the shielded transport cask. And then the filters are loaded into a 55-gallon drum in an automatic capping station.

The DAW are sorted, compacted, packaged, and stored in the temporary storage area in the compound building. The other concentrates are transported to concentrate treatment system called the CTS. Then, they are dried, packaged in a 55-gallon drum or HIC.

The temporary storage area of the APR 1400 is sized to accommodate the solid waste for six months, which is satisfied 30-day criterion of ANSI/ANS 55.1.

So, now I am going to talk about the key RAI items for the sections 11.1 through 11.5. We have two open items for these sections. The first one is RAI 8201, question 11.2-6. The staff asked to provide the detergent liquid effluent process options. KHNP provided a response recently stating that the liquid in the detergent waste tank is either sent to the environment via the monitored

1 discharge pipe after result of sampling satisfied
2 the risk limits. If not, it is sent to the SWMS
3 for further processing.
4 The impact on the effluent
5 concentration limit and the public dose due to the
6 release of the detergent waste were already
7 considered in the calculation of the PWRA to
8 estimate the risk to the environment. This is what
9 we answered in our response.
10 Another open item for the radwaste
11 system is RAI 8270, question 11.2-7. The staff
12 requested to change the DCD description in the
13 three radwaste systems and the steam generator
14 blowdown system to be consistent.
15 We have updated the relevant section,
16 including Section 10.4.8, which is steam generator
17 blowdown system such that the descriptions in the
18 system boundary, system classification, and the
19 source terms are consistent. This response was
20 submitted to the NRC in July of this year.
21 So, now I am going to turn it over to
22 Mr. James Jhun for presenting the section 11.5.
23 MR. JHUN: Good afternoon. My name is
24 Jim Jhun. I am a technical engineer to KEPCO E&C

1 working in Korea right now.
2 And today I am going to present to you
3 on Section 11.5 regarding process and effluent
4 monitoring systems and sampling systems.
5 Okay, my mission today is first of all
6 I am going to try to facilitate the communication
7 between design engineers and to you so that you can
8 have a better understanding of the design
9 information that we have presented in Section 11.5
10 and it will help you understand the design and will
11 provide us your informed feedback by which you will
12 help us improve the quality of the design, as well
13 as the improved documentation. That is my mission
14 for today.
15 And you can stop anytime during my
16 presentation and ask questions. And at times,
17 because coming in here was a long flight for me to
18 come in here and at times I might be -- I still am
19 recovering from the jet lag and I might be groggy
20 and sometimes I may be incoherent. So, I want your
21 understanding. Okay?
22 With that introduction, let me start
23 with my presentation. First slide, the
24 presentation actually comes in two parts. The

first part is the monitoring system itself and then the second part I will discuss the key review items. Okay?

Okay, the next slide is objective of PERMSS, which is the processing and effluent radiation monitoring systems. The objective or purpose of the system is to measure and record radioactivity levels of liquid and gaseous process system and effluence before they discharged to the environment.

In Chapter 12 actually we discuss part of the radiation monitoring system, which is the area radiation detectors. It will be discussed in Chapter 12.

And the function of the PERMSS is there are three different categories. First function is to provide early warning of the monitoring functions or appropriate operation of the radioactive systems or release of the radioactive effluence.

And second category of the function is to provide monitoring of the liquid and airborne activities in selected locations throughout the plant, as well as the effluent path before they are

1 released.

2 Then also third function of the PERMSS

3 is to generate alarms indications and in some cases

4 control functions to limit the release or divert

5 the release of the radioactivity.

6 The classification of the PERMSS is

7 safety class III. It is in accordance with ANSI

8 Standard 51.1.

9 Okay, and if you don't have any

10 questions, we can move on to the next slide.

11 CHAIRMAN BALLINGER: Every one of us

12 has suffered the jet lag that you have. So, we are

13 sympathetic. But the person over there who is

14 recording this is not so sympathetic. So, please

15 try to speak up a little bit.

16 MR. JHUN: Okay, I will try to speak

17 into the microphone as close as possible.

18 Okay, the next slides actually list

19 important design requirements or design criterias.

20 And it is pretty much self-explanatory. So, I will

21 not go into details of the requirements.

22 MEMBER SKILLMAN: James, please back up

23 one slide.

24 MR. JHUN: Okay.

1 MEMBER SKILLMAN: The last bullet.
2 Non-safety expect for containment air monitors and
3 main control room air intake monitors. I
4 understand why those two would be safety.
5 MR. JHUN: Okay.
6 MEMBER SKILLMAN: But here is my
7 question.
8 MR. JHUN: Okay.
9 MEMBER SKILLMAN: Why wouldn't the
10 final release monitor that Dr. Chu asked about,
11 where the liquid waste is discharged from the site,
12 why wouldn't that be safety grade?
13 MR. JHUN: Okay, the classification,
14 according to ANSI Standards, the safety-related it
15 cannot function as to perform protective functions
16 -- protective actions. And containment air monitor
17 certainly it is a performance protective action
18 because the monitor generates the control and
19 various ventilation actuations signals which is a
20 BOP, SFAS signals. And they do start controlling
21 within this ventilation system, which protects the
22 control room operators from the outside
23 radioactivity during design basis accident. Now,
24 that is the reason why it is classified as safety-

1 related.

2 The question you asked about why the

3 liquid radwaste system monitors are non-safety

4 functions, it is important. It is performing

5 important functions but it is not really, according

6 to ANSI standard, it is not really classified as

7 protective. It is not performing protective

8 function. That is the reason why it is not

9 classified as safety class.

10 MEMBER SKILLMAN: It just seems odd

11 that the toggle for that device is going to be 10

12 CFR 20, Appendix B, Table 2, Column 1 and perhaps

13 Column 2. Column 2 is unrestricted release.

14 It just seems that has embedded within

15 the regulation the idea that has safety

16 consequences to the public. So, it would seem to

17 me that that should be safety-related.

18 MR. JHUN: Well that is, actually,

19 question but if you look at the FSAR Chapter 3,

20 they do have a list of classifications and it lists

21 all those SSEs which are classified as safety-

22 related and which are not safety-related.

23 Now, for instance, like radwaste

24 systems, they do perform very important functions.

1 However, they do have a separate categorization and
2 they are different from safety class in accordance
3 with ANSI Standard. That is the reason why.
4 I'm not saying that it is not
5 performing important functions it just we are
6 following the criteria given in the --
7 MEMBER SKILLMAN: The ANSI Standard.
8 MR. JHUN: Right, which is endorsed by
9 the NRC Regulatory Guide.
10 MEMBER SKILLMAN: Thank you, James.
11 MR. JHUN: Okay.
12 MEMBER SKILLMAN: Thank you.
13 MR. JHUN: Of course I didn't mention
14 about the other safety-related monitor, containment
15 monitor but unless you have questions, I will skip
16 that part.
17 MEMBER STETKAR: I was going to ask it
18 later but as long as we stopped here, it will save
19 the next couple of slides.
20 I understand that the containment
21 monitors RE- whatever they are 39A and 40B are used
22 as part of the normal in-containment leak detection
23 capability.
24 MR. JHUN: That's correct. It is

1 actually the function is intended to detect RCS
2 leakage in accordance with Regulatory Guide 1.45.
3 MEMBER STETKAR: I also noticed that
4 those monitors are isolated. The inlet line and
5 the return line from those monitors are isolated by
6 containment isolation signal.
7 MR. JHUN: Correct.
8 MEMBER STETKAR: I looked and I could
9 not find any information. Do those monitors
10 provide any other -- do those monitors provide any
11 automatic signals to anything or are they simply --
12 MR. JHUN: They don't provide any
13 automatic action.
14 MEMBER STETKAR: That is what I -- I
15 couldn't find any but I didn't know where to look.
16 The other question I had though is
17 because their containment atmosphere monitors --
18 are they used by the operators anywhere in the
19 operator's guidance in the emergency operating
20 procedures, the severe accident management
21 guidelines or anything for the operators to monitor
22 containment activity? And if they are, then how
23 are the operators instructed to reset isolation
24 signals and get them operating, if they need them,

1 since they are isolated?

2 MR. JHUN: Well, containment isolation

3 signals depends upon which valve that containment

4 isolation valves are receiving these isolation

5 signals. For instance, like the containment air

6 monitor, there is an isolation valve which receives

7 the containment isolation it will automatically

8 closed, based upon containment isolation signals

9 but operators have the option to override that

10 containment isolation signal if they wanted to

11 monitor on a continuous basis after the accident

12 how much radioactivity inside the containment. So,

13 the logic has the provision to allow them to

14 actually unblock that safety injection signals so

15 they can actually have that monitoring capability

16 available.

17 Does that answer your question?

18 MEMBER STETKAR: Partially but only

19 partially because I'm searching for what particular

20 guidance is available to the operators for the use

21 of those monitors. And simply saying that I can

22 reset the safety injection signal, and reset the

23 containment isolation signal, and reopen those

24 valves is something that might be achievable

electrically but might not be achievable operationally because there are typically very specific criteria for resetting those safety injection and isolation signals, things like I can't be in a degrading plant condition; I must be in a stable plant condition.

MR. JHUN: But I don't think you are aware this particular monitor samples the containment air and it turns back to the containment air. So, actually the release, the possibility of release to the environment is negligible.

MEMBER STETKAR: Well, if you are saying the possibility of release from the monitoring circuit itself is negligible --

MR. JHUN: That's right.

MEMBER STETKAR: -- then why is it isolated?

See, my whole point is you can't have it always for everybody all the time, that it is isolated, according to the certified design. So, it is actively isolated. And the rationale that I could find said it is isolated because it is a potential release pathway. But if the operators

1 need it and they are instructed to use it under
2 certain conditions, I would like to know what those
3 conditions are and how they are instructed to un-
4 isolate it, to reset all of those signals and get
5 them back operating again. In other words, I am
6 basically questioning the tradeoff between
7 automatic isolation of that function and the
8 conditions under which the operators would be
9 directed to use those monitors to assess conditions
10 inside the containment.
11 MR. JHUN: Okay, to answer your
12 question, if you look at Chapter 6 FSAR or SRP,
13 they do have a list of containment isolation
14 valves. And all containment isolation valve has to
15 be closed or you have got this what happens. And
16 this also requires closing under that category and
17 this valve has to be closed.
18 Now, depending upon assessment of the
19 operators, they can go ahead and open this valve
20 and continuously monitor this function. However,
21 there is actually -- this is just giving you one
22 side of the design. The other side of the design
23 is this particular monitor is listed in the tech
24 spec and they do have an operation requirement for

1 this particular monitor and operator has to follow
2 that tech spec.
3 MEMBER STETKAR: But that is for the
4 normal leakage function. That is for the normal
5 leakage detection. That is identified and
6 unidentified leakage.
7 I am talking about after some sort of
8 initiating event, some sort of developing accident
9 scenario, where I do get an isolation signal. They
10 are isolated and yet there is instructions to the
11 operators to use these particular monitors.
12 MR. TSANG: So, if I ask some comments
13 that the RE-039 and -040 these are for the leak
14 detection from the reactor coolant system during
15 normal operation, detecting 0.5 gp in less one
16 hour, as a requirement in Reg Guide 1.45.
17 Like you mentioned, during or after the
18 accident condition we might have a very high level
19 of radiation conditions inside the containment.
20 That is monitored by the other safety-related air
21 radiation monitor which is described in Section
22 12.3. The operator can get the information how
23 high the radiation conditions are inside the
24 containment.

1 We have separate saturated area
2 radiation monitor which is used for the loss of
3 coolant condition, which includes the significant
4 cooldown conditions.
5 MR. JHUN: Actually, there are four
6 sets of two sets in the upper operating area and
7 two sets in the lower operating area.
8 MEMBER STETKAR: Ah.
9 MR. JHUN: That is area monitors. It
10 is actually it is discussed in chapter item
11 sections 12.3.
12 MEMBER STETKAR: Okay. Thank you.
13 MR. JHUN: Okay.
14 MEMBER STETKAR: In the interest of
15 time, thank you. I see those. Thank you.
16 MR. JHUN: Okay, let's move on to the
17 next slide.
18 Okay, design features of the PERMSS.
19 PERMSS consist of two different types, liquid
20 monitors and gas monitors and they are, depending
21 upon the installation configurations, monitoring
22 could be offline, online, or could be inline.
23 Okay, three different types.
24 Of course the bulk of them, probably 99

1 percent of the monitors are offline monitors.
2 There is one inline monitors that I explained to
3 you being control intake monitors that is inline
4 monitors. And there is one online monitor that is
5 a main steam line monitors. Those are the three
6 different types of monitors that we have in the
7 PERMSS.
8 And detective types are designed to
9 facilitate maintenance and calibration while
10 minimizing the effect of background information and
11 display of the radiation level on alarms are basic
12 functions.
13 And on top of that base function, there
14 is a radiation detectors. Usually the radiation
15 detectors are located in accessible areas and have
16 sufficient shielding. And safety-related PERMS,
17 they are environmentally qualified and seismically
18 qualified.
19 So, those two monitors that we have I
20 discussed to you being controlling intake monitors
21 and containment air monitors, they are
22 environmentally qualified and seismic qualified.
23 Any questions? If not, let's move on
24 to the next slide.

1 Design features and gaseous PERMS
2 monitors I provide you with a list of gaseous
3 PERMS. Of course, there is a comprehensive list of
4 gaseous monitors in Section 11.5-1 Table 11.5-1 and
5 -2.
6 And if you look through them, you can
7 see containment air monitors. They are offline and
8 MCR air intake monitors they are inline monitors.
9 And main steam line monitors, they are
10 online monitors that includes N-16 monitors. N-16
11 monitor is used to detect steam secondary to -- on
12 the primary-to-secondary leakage.
13 And all these monitors, with the
14 exception that I described to you are non-safety-
15 related.
16 And I discussed the other two bullet
17 items.
18 Okay, if you don't have any questions,
19 let's move to the next slide.
20 Okay, next slide is design features of
21 liquid monitors. And I provide you with a list of
22 the liquid monitors. And among these monitors,
23 steam generator blowdown monitors, as well as
24 component cooling water and the essential service

1 water monitors detects the leak detection and steam
2 generator blowdown and CCW monitors provide
3 additional isolation functions.
4 Okay, any questions? Okay, let's move
5 on to the next --
6 MEMBER CHU: Quick question.
7 MR. JHUN: Yes.
8 MEMBER CHU: You just described your
9 whole waste management system design. Are there
10 things in the whole system, either a concept or
11 design features that Korea hasn't done or is not
12 currently using?
13 So, I'm trying to differentiate what is
14 new for you in the waste management system.
15 MR. JHUN: Are you talking about the
16 system not the radiation monitoring system?
17 MEMBER CHU: Including monitoring
18 system. The whole thing.
19 MR. JHUN: Okay, I will address the
20 radiation monitoring system first.
21 MEMBER CHU: Okay.
22 MR. JHUN: The radiation monitoring
23 system, the list of monitors that you see here,
24 they are probably about 90 percent identical to

1 what they have in APR 1000 or Shin-Kori 3 and --
2 Shin-Kori 1 and 2 as well as Shin-Hanul Units 1 and
3 2.
4 This list of monitors Shin-Kori 3 and 4
5 are identical. Does that answer your question?
6 MEMBER CHU: Yes.
7 MR. KANG: Okay. For the radioactive
8 management -- three radioactive waste management
9 system, there is the system for the DC application
10 almost identical to those in here.
11 MEMBER CHU: So, you have to experience
12 the capability.
13 MR. JHUN: Right. Okay, let's move on
14 to the next slide.
15 Key review items I list only two open
16 RAIs. Mr. Kang, when he did the presentation, he
17 mentioned three RAIs and we just happen to list two
18 of them.
19 The first open item is RAI 8087,
20 question 11.5-1 and -2. Okay? The issue is, and I
21 see the staff asked us to provide in text form. We
22 had a comprehensive list in tabulation forms that I
23 mentioned to you, Table 11.5-1 and -2. In addition
24 to that, the staff asked us to actually provide it

1 in text write-up. So, we have gone through
2 providing a request for information in text format.
3 That was responded back to NRC and it is being
4 reviewed by NRC staff. And it is still an open
5 items.
6 And resolution, like I explained,
7 request for information have been added and revised
8 in response to RAI with the exception of QA
9 provisions of each monitor and the correlation to
10 operating programs which will be supplemented in
11 the later revisions. And that is still open RAI
12 items.
13 An open RAI items is staff asked us to
14 provide sensitivity response time alarm limits and
15 primary-to-secondary leakage detection
16 instrumentation. In addition to that, staff asked
17 us to provide additional information regarding
18 steam line flow monitors.
19 The resolution is we have made changes
20 to the write-ups and we provided the requested
21 information. And it is still be reviewed by the
22 staff and we are waiting for the outcome of this
23 review.
24 And if you don't have any other

1 questions, that actually concludes my presentation.
2 MR. TSANG: Okay, now I'm going to talk
3 about the design evaluation APR 1400 radwaste
4 management system.
5 This will cover the compliance to 10
6 CFR 50 Appendix I and 10 CFR 20 Appendix B, liquid
7 and gaseous radwaste system failure analyses,
8 radwaste system safety classification, and the
9 system leakage detection capability.
10 So, in order to demonstrate compliance
11 to 10 CFR 20 and 50, it is necessary to evaluate
12 the annual gaseous and liquid effluent release to
13 the environment using PWR-GALE Code. Since as I
14 mentioned earlier, this is the current version of
15 the GALE Code incorporates the old version of the
16 default RCS concentration from ANSI 18.1, 1985. We
17 modified the code to reflect the 1999 version of
18 the ANSI standard, as required by Reg Guide 1.12.
19 These modified GALE Codes were reviewed
20 by the staff during audit. And for the offsite
21 dose calculation, we used the enveloping x/Q value
22 and the position factors, which were recommended by
23 the EPRI UND for the site-enveloping parameters in
24 order to bound most of the U.S. sites.

The liquid waste management system discharge was assumed to be diluted by a cooling water flow of 10,000 gallons per minute, which will be confirmed by the COL applicant. And the computer cads, GASPAR and LADTAP codes were used for the calculation of offsite dose as recommended by Reg Guide 1.109.

And as a result of these calculations, we confirmed that the dose the public meets the limits defined in 10 CFR 50 Appendix I and their concentration of the effluent and risk to area boundary meets the effluent concentration limits defined in 10 CFR 20 Appendix B. The numbers are shown in the slides.

And the next topic is the radwaste system failure analysis. For the liquid waste system failure analysis, we selected the bounding cases as the failure of the boric acid storage tank because it contains the high source in the yard area.

The guidance is provided in BTP 11-6, which requires to make the concentration at the nearest pool of water to meet the 10 CFR 20 Appendix B concentration limit.

1 In order to meet the concentration
2 limit, the calculation shows that we need to dilute
3 the radionuclide concentration using the factor of
4 9,340, which is also needed to be confirmed by the
5 COL applicant.
6 And for the gaseous waste system
7 failure analysis, we assumed the inadvertent bypass
8 of charcoal delay bed operation in the GRS system.
9 In our calculation, we assumed that the iodines and
10 particulates are removed by the pre-filter and the
11 charcoal guard bed. The guidance is provided in
12 the BTP 11-5. And based on this guidance, we
13 assumed a one percent fuel failure and we bypassed
14 the gaseous waste radioactive system.
15 The calculation was performed by the
16 computer code LADTAP, which is also used for the
17 Chapter 15 radiological consequence analysis. And
18 the x/Q was used with a variable of 1.0 ten to the
19 minus three which is used also for the Chapter 15
20 analysis.
21 The calculated dose at the exclusionary
22 boundary and low-population zone are 1.16 millirem
23 and 0.255 millirem, which is much less than the
24 limit of 100 millirem.

1 Now, I am going to talk about the
2 radwaste classification and steam generator leak
3 detection capability. For the classification of
4 the radwaste system, including liquid, gaseous, and
5 solid, and steam generator blowdown system, we
6 assumed one percent fuel defect source term because
7 we assumed that we are going see if their criteria
8 dose limit, as is specified in Reg Guide 1.143,
9 which is conservatively assumed that we exceed the
10 dose criteria and we went to the original inventory
11 with the limit value is at 10 CFR 71.
12 As a result of the calculations, as I
13 mentioned earlier for the system description,
14 liquid waste management system components are
15 classified as IIa or IIc. GWMS and SWMS components
16 are all classified as IIa. Blowdown system
17 components are all classified as IIc.
18 And in NEI 97-6, the applicant is
19 needed to comply with the detection of steam
20 generator leakage rate of 30 gallons per day. In
21 order to demonstrate this requirement, we assumed
22 that the steam generator is a liquid from the power
23 level of zero to 100 percent. And based on the
24 realist geometry of our APR 1400 system and the

1 location of the radiation monitor of nitrogen-16
2 monitor at the main steam line, we calculated the
3 concentration of the nitrogen-16 at the point of
4 the detection. It is estimated 3.16 ten to the
5 minus four to 1.68 ten to the minus 1 Bq over cubic
6 centimeters, depending on the power level.
7 It means that the commercially
8 available nitrogen-16 monitor can detect from the
9 range of ten to the minus four to 100 Bq per cubic
10 centimeters. It means we have sufficient
11 capability to detect 30 gallons per day of steam
12 generator leakage. That is described in DCD
13 Appendix 11-B.
14 MEMBER SKILLMAN: Before you change
15 slides, at the top of this slide, you show the
16 words in the second bullet under the first block
17 based on one percent fuel defect source term. And
18 if you back up one slide, you use the term, the
19 third bullet under the second block, fuel failure -
20 - one percent fuel failure. Do you mean the same
21 thing?
22 MR. TSANG: Yes.
23 MEMBER SKILLMAN: They are the same
24 thing?

1 MR. TSANG: Yes, I apologize for the --
2 MEMBER SKILLMAN: That's okay. I was
3 just wondering if you had this little trick up your
4 sleeve where you would say well, we mean this one
5 thing here and we mean this other thing here. You
6 mean the same thing.
7 MR. TSANG: Some people use the word
8 failure. We tried to be consistent in the DCD with
9 the terminology of defect for the normal operation
10 because we use the term failure in Chapter 15
11 analysis.
12 MEMBER SKILLMAN: It would seem that
13 this term should be used consistently. Okay, thank
14 you.
15 MR. TSANG: So, this is the last slide
16 so I am going to summarize the presentation.
17 As mentioned earlier, we have five open
18 items but actually we have four open items for
19 Chapter 11, so far. Responses for the three items
20 were already submitted. And now we think that
21 those responses are being reviewed by the staff.
22 Responses for the remaining two items that are
23 related to the correlation to ODCM, PCP, and REMP
24 will be provided by the end of this year.

1 So, in summary, KHNP believes that
2 their radwaste management system and the process
3 effluent radiation monitoring and sampling system
4 for APR 1400 are designed to comply with the
5 relevant NRC requirements.
6 And the design evaluation shows that
7 the plant complies with the public dose limit and
8 the effluent concentration limits.
9 And the analysis which was done for
10 leakage and gaseous waste system turned out to be
11 the limit defined in BTP 11-5 and -6.
12 This is the end of the presentation.
13 Thank you for your attention. If you have any
14 questions, I will appreciate it.
15 CHAIRMAN BALLINGER: Questions from
16 colleagues?
17 I think I would like to take a recess
18 until five minutes until four so that we can change
19 out and take other actions that most of us need to
20 take.
21 (Whereupon, the above-entitled matter
22 went off the record at 3:39 p.m. and resumed at
23 3:54 p.m.)
24 CHAIRMAN BALLINGER: Okay, we're back

1 in session and it is the staff's floor.
2 MR. WILLIAMS: Yes, sir. We're going
3 to talk about Chapter 11, Sections -- pardon me?
4 CHAIRMAN BALLINGER: That was good.
5 MR. WILLIAMS: We're not?
6 CHAIRMAN BALLINGER: No, no, the sound
7 was good. He's happy.
8 MR. WILLIAMS: We're going to talk
9 about Section 11.1, 2, 3, 4, and 5, similar to what
10 you just saw from the applicant.
11 My name is Steve Williams. I've been
12 in NRO for eight years now, over eight years in the
13 RPAC branch and did the technical review of this
14 chapter, along with Zach Gran in our group also.
15 And we want to go through our
16 presentation. A lot of it is a regeneration of
17 what you just heard and if you don't mind, in
18 certain sections, I will just ask as we go through
19 the bullets, rather than me reading the whole
20 bullet, if I can speed things up for everybody by
21 asking if there is any questions on this bullet and
22 proceed on to the next one. It may save us all
23 some time, if you don't have any problem with that.
24 And interrupt me at any time for any questions,

unless everybody's not back yet.

CHAIRMAN BALLINGER: Pete's not going to be here but we're good at interrupting.

MR. WILLIAMS: All right. I just want to go through the technical staff for the reviewers, myself and Zach. We also had help from the instrumentation people. That would be Deanna Zhang. I think she is in here the audience. And Rick Scully couldn't make it today because of illness and plant systems. As we use other branches to help us in the review, since it impacts more than just health physics, it is the actual balance of plant and instrumentation and so on.

Project Engineers are Jeff Ciocco and Tarun Roy here, our Chapter Project Manager. Next slide.

Here is basically the same slide that the applicant showed that the breakdown between 11.1 and 5, 34 questions. And we have five questions still open at this time. We will get to a couple of them, since we have written this that we have actually -- they are in confirmatory at that time. So, we are down to actually three and we will look at them.

1 Okay. The first one is Section 11.1.
2 The expected coolant source terms, based on the
3 modified ANSI/ANS 18.1 for 1999, KEPCO explained
4 how they used that and they also modified the GALE
5 Code. And we had requested an RAI on that and
6 actually requested an audit in the beginning of our
7 review and it hadn't happened for quite some time.
8 What we were looking for was the executable files
9 and the source code files so that we could review
10 and verify their calculations for the source term.
11 We did receive the requested docketed information
12 and then quickly, means within two weeks,
13 determined that the only changes they made to GALE
14 were to update the ANSI 18.1/1999 which was from
15 1985. They updated it to 1999 RCS standard. And
16 then after we reviewed that, we found that it met
17 the SRP Section 11.1 and Reg Guide 1.112
18 calculation of releases reg guide requirements.
19 And essentially, there are no COL items in 11.1
20 listed for this section. And we have closed out
21 all open items and RAIs in this section.
22 MEMBER REMPE: So, I have a question on
23 this section that is not with an open item. You
24 had an RAI 1568146 because the applicant had

1 apparently done some calculations where they
2 basically said certain isotopes are present. So,
3 we didn't consider them. And the way I have read
4 your draft SC, it basically said that the reason
5 RAI was issued was because that you couldn't match
6 the numbers generated by the applicant. And so
7 when the applicant came back and said hey, we don't
8 have any contributions from those isotopes, you
9 said oh, okay, you're right.
10 Is there something wrong with the way
11 the process is? I mean maybe we ought to change
12 the way we review things that -- it's basically
13 related to Reg Guide 1.143 where certain numbers
14 have to be used. And I'm just wondering. What I'm
15 reading here kind of sounds like when the applicant
16 actually -- and I'm not saying this because of what
17 KHNP has done, I am just trying to see if we need
18 to improve our review process so we don't have RAIs
19 going just because an applicant puts zero in
20 because they have no contribution.
21 Is my question making sense to you?
22 MR. WILLIAMS: Yes and we find that in
23 some of our reviews, based on the decay of
24 radionuclides. There is some -- and if you look at

1 the decay scheme of like cesium goes to barium-
2 137m, which actually has the radiation we are
3 looking at and decays down to a stable nuclide, in
4 some calculations people will put in cesium and
5 barium-137m. Other calculations, they will just
6 use the cesium to represent the whole decay scheme
7 and apply all the radioactive materials just to
8 cesium.
9 And what KHNP was doing, and you can
10 correct me if I am wrong, they were putting zeros
11 for the daughter products.
12 MR. GRAN: I think for some of those it
13 is just zero because it is negligible not that it
14 doesn't really exist.
15 MEMBER REMPE: On niobium-95, yttrium-
16 89m, rhodium -- oh, sorry.
17 Okay, niobium-95, yttrium-89m, rhodium-
18 106m, it basically says the liquid waste management
19 system doesn't contain these nuclei in the source
20 term. And then there were some that were because
21 of their half-life being short.
22 But I just was wondering. Again, you
23 are saying that -- I guess I'm still -- I will
24 admit I'm not well familiar with this process but

1 it just sounded like there is something in the
2 requirements that needed to be reevaluated.
3 MR. WILLIAMS: Well, what you just read
4 is yes, some of them are such a small activity that
5 they are not even used in the reg guides that we
6 used to calculate the dose. In other words, the
7 dose conversion factors will not even be there for
8 certain radionuclides on the list that we get.
9 They are still produced but they are in such small
10 quantities that they are negligible.
11 MEMBER REMPE: So, shouldn't the staff
12 be aware of this instead of having to issue an RAI
13 is what I am trying to get to is maybe there is a
14 way that we could improve the process. I mean it
15 is only one RAI but it seems like that we ought to
16 be aware of that.
17 MR. WILLIAMS: Yes, I think you are
18 right but we don't review these every day. We get
19 them in spurts as far as reviewing them and then
20 another six, eight months go by and we get another
21 submittal and we may forget how the process works.
22 MEMBER REMPE: Yes, okay. Maybe it is
23 something we ought to think about --
24 MR. WILLIAMS: Right.

1 MEMBER REMPE: -- with the 50 plus
2 startup companies that are going to be coming
3 through. I just had a question while I was reading
4 it.
5 MR. WILLIAMS: Sure. Let's see, where
6 was I?
7 Okay, no COL items in 11.1,
8 essentially, and no open items.
9 Okay, 11.2 is the liquid waste
10 management system. The staff reviewed the items
11 that I have bolded on the next two pages here. A
12 lot of these items, if I can read them all or maybe
13 just go through and say bullet one, basically,
14 because KHNP has already gone through the design
15 basis. Most of the features, the system
16 description, processing methods, capacities -- we
17 had a lot of questions on that -- the seismic
18 quality group classifications. Anybody have any
19 problem with that as far as going bullet to bullet
20 for questions?
21 So, bullet one, is there any questions
22 on what we looked at in as far as the summary?
23 Bullet two, we looked at the basis and
24 development of the liquid process waste streams and

1 the estimated inputs to the LWMS, and the treatment
2 process performance, and the decontamination
3 factors. These are all inputs that will go later
4 into the liquid dose calculations as the different
5 parameters that we put into our LADTAP program to
6 calculate the dose to the environment.
7 MEMBER SKILLMAN: Steve, was the failed
8 fuel estimate one percent and the constant
9 decalcification an issue in your review?
10 MR. WILLIAMS: Yes.
11 MR. GRAN: So, for GALE it's not. You
12 can't attribute it to any failed fuel percentage.
13 The ANSI standard is based off of just normal
14 operating effluent data. So, it is kind of hard to
15 give it a percentage. But for normal effluent
16 releases, it is based off of normal. For the Reg
17 Guide 1.143 system classifications, it is one
18 percent.
19 MR. WILLIAMS: All this, Dick, is found
20 in the SRPs that we use and we use that as guidance
21 to go through and when we do the calculations in
22 the reg guides in the SRP.
23 MEMBER SKILLMAN: Okay, thank you.
24 MR. WILLIAMS: The KHNP proprietary

1 version of the GALE Code was used to calculate the
2 liquid effluent releases with the source term
3 during normal operations, including AOOs described
4 by KHNP and their RAI technical responses.
5 The next page. The staff confirmed the
6 methodology basis and assumptions used to comply
7 with effluent concentration limits, the ECLs in 10
8 CFR 20 that they mentioned in Appendix B, Table 2,
9 Column 2. And we were also using those limits,
10 using those numbers to do the dose limits in the
11 design objectives of 10 CFR 50 Appendix I, which
12 are the doses.
13 We also looked at the epoxy coating
14 systems used to line LWMS cells and cubicles and
15 comply with 10 CFR 40.1406 and essentially Reg
16 Guide 4.21 and Reg Guide 1.54, recognizing again
17 that more recent standards may also be used in
18 their design for their LWMS.
19 We also looked at 10 CFR 20.1406, Tier
20 1 and ITAAC information. We looked at the tech
21 spec section and preoperational testing and
22 reviewed all those. Wrote, essentially, the RAIs
23 that were needed.
24 MEMBER MARCH-LEUBA: Can we go back a

1 couple of slides before learning to change it?
2 You mentioned the GALE Code and that
3 they had a proprietary version. I read in this
4 that you guys did a review of the code. And my
5 concern is probably going to apply more to other
6 sections than this one. We have COLs that have
7 been approved and used for many years and then the
8 licensee or the applicant goes and makes some
9 modifications to put their own correlations or
10 whatever.
11 How does the staff guarantee that that
12 COL is still the same that it was before? I mean
13 how do we know it is still approved?
14 MR. WILLIAMS: That is done by the --
15 I'm not on the NRR side but that is done by
16 licensing changes and they have to submit I think
17 it is by 10 CFR 50 procedures.
18 MEMBER MARCH-LEUBA: Yes, but for
19 example, in the case of the GALE Code when they put
20 the proprietary version, did they go through a
21 review and approval?
22 MR. WILLIAMS: Well, in the cases of
23 the inspectors, yes, they go through the
24 calculations again for any changes that they make

1 from the original changes.

2 MR. GRAN: So for the GALE Code for

3 example, we requested the source code and we had

4 the source code for our -- and it is basically you

5 do a window, first of all to see what the change,

6 the deltas were.

7 And for this case, at least, it is very

8 simple because you see it at the source term

9 library was the only thing that changed. So, I

10 mean if you just do the comparison and see the only

11 changes are to the source term, we had confidence

12 they didn't really change anything else.

13 MEMBER MARCH-LEUBA: So, in this case,

14 you reviewed it and you are confident these are

15 good. It is going to be a renewing question of

16 mine not just for this subject but for all the

17 other, too.

18 MR. GRAN: We also had spreadsheet

19 calcs about recompiling the code where we noticed

20 that you could ratio out the old ANSI standards

21 and, for the liquid case, there is a fudge factor

22 tacked on that was weighted based off the

23 contribution for each radionuclide. But we could

24 reproduce it without having the KHNP source code.

1 But when we received it, we have the
2 ability to do the WinDiff, to confirm that they did
3 not change anything else.
4 MR. WILLIAMS: Okay, page seven.
5 Additional topics of interest in our review for the
6 COL information items which are required to be
7 provided by a COL applicant in using the design,
8 the DCD. These included mobile and temporary
9 radwaste processing equipment and interconnection
10 to plant systems. We looked at that. We looked at
11 the release points, effluent temperature, shapes of
12 orifices and so on where the release is and where
13 it releases to, hydrological data, and groundwater
14 or surface analysis to comply with the ECLs in 10
15 CFR 20.
16 We also looked at the liquid tank
17 failure calculations and ensured that the ECLs were
18 met. We looked at the offsite liquid doses, again,
19 in 10 CFR 20 to comply with 40 CFR Part 190 and 10
20 CFR 50 Appendix I.
21 Another thing the COL would have to
22 provide would be the site-specific cost benefit
23 analysis of where they actually physically placed
24 their new plant and, obviously, the piping and

1 instrumentation diagrams specific to their COL
2 site.
3 After review of 11.2, as the applicant
4 stated, we have two open items. The first is to
5 provide liquid effluent tracking, providing a
6 liquid effluent tracking process for detergent
7 radwaste tank, liquid effluent releases, including
8 comparisons to 10 CFR 20 and also liquid effluent
9 doses calculated from the LADTAP Code for 10 CFR 50
10 Appendix I.
11 That RAI is in review. They have
12 submitted I think it is Rev. 2 of a response. I
13 wrote the RAI and what I am looking for is that
14 that detergent waste tank that you talked about
15 previously with them is ensured to receive the same
16 process that the regular release tanks receive
17 before they release the tank. In other words,
18 sampling analysis, composite sampling required by
19 tech specs, and the dose also included in the total
20 dose for the quarter and the year.
21 And we are working on that right now.
22 In fact, we are going to schedule a meeting for
23 tomorrow to discuss that. That's why that is still
24 open.

1 The other item in 11.2 is 11.2.7, the
2 request for consistent changes throughout the
3 sections 11.2, 3, 4, and 10.48 for the steam
4 generator blowdown.
5 In addition, the staff requested the
6 applicant include the system source terms for the
7 components described in 10.4.8. And what we were
8 looking for there was that the applicant -- well,
9 the applicant did recently update the response they
10 provided consistent changes in 11.2 through 4 and
11 10.4.8. And we are at the point where we made this
12 a confirmatory item. That is one of the ones that
13 are close. So, just one of them is open.
14 Any questions?
15 11.3 is the gas waste management
16 system. The DWMS design basis and features system
17 description processing methods, capacities, seismic
18 and quality group classifications, performance
19 characteristics, instrumentation alarm systems,
20 automatic isolation of gas waste process flow, and
21 effluent release, also looking at hydrogen and
22 oxygen monitoring and the ALARA design features and
23 the actual release points for COL but for the DCD
24 is just where the release point may be, based on

1 the plant design.
2 MEMBER STETKAR: Steve, the question I
3 asked the applicant about single point isolation of
4 the gaseous releases, the staff is okay with that?
5 MR. WILLIAMS: Pardon me? The single
6 point --
7 MEMBER STETKAR: The single point --
8 they only have just one isolation valve. It is
9 valve 008 in the gaseous release line. And if they
10 have high activity and that valve doesn't close, it
11 is beyond me to figure out how I do not get an
12 above spec release. So, the staff is okay with
13 that?
14 MR. WILLIAMS: Well, I was thinking
15 about that when you were going over that with them.
16 The main thing is that when you do a release, you
17 will calculate what the monitor should read. And
18 also, when we get back to 11.5, they have interlock
19 functions. If the function were not to work is
20 what you are alluding to?
21 MEMBER STETKAR: The valve doesn't
22 close.
23 MR. WILLIAMS: Doesn't close. The only
24 things that would be available to operations would

be that if they were watching a monitor and maybe somebody noticed the monitor was going high and they notified the man at the radwaste panel to close that.

MEMBER STETKAR: Close what? The valve --

MR. WILLIAMS: Close that valve --

MEMBER STETKAR: I'm sorry, the valve didn't close.

MR. WILLIAMS: Right.

MEMBER STETKAR: It's broke. It didn't close. It can't close.

MR. WILLIAMS: Or stop the release operationally.

MEMBER STETKAR: Well, on the liquid system, I can stop the release and it does automatically by stopping the pumps.

MR. WILLIAMS: Right.

MEMBER STETKAR: There ain't no pump pumping the gas out.

MR. WILLIAMS: Well, in that case, what I remember as far as what we have in our procedures were that they could also close the dampers and turn off the fan in the case of --

1 MEMBER STETKAR: But what you are
2 saying is the staff is okay relying on all of those
3 operator actions for gaseous releases.
4 MR. WILLIAMS: I noted another thing
5 when I was sitting in the back, too. We usually
6 had some kind of double and manual backup to the
7 isolation valve and we would close the manual
8 valve. That is another -- I thought I had written
9 RAI on interlocks.
10 Well, where this comes in is, again, on
11 the monitors, the function of the monitors. And
12 back in Table 11.5 we talk about and we ask them to
13 put in all the monitors that do have interlock
14 functions. And you are right. If that fails, we
15 have to look at if there is any other way to stop
16 the release based on a manual isolation.
17 MEMBER STETKAR: Thank you.
18 MEMBER SKILLMAN: Steve, let me follow-
19 up with John. I asked the gentleman from KHNP
20 about why that release isn't safety grade and the
21 answer is because it is not an accident function.
22 I understand that.
23 But what John was really pointing to is
24 why didn't the staff you have got to have two

1 valves? You have got to have a redundant valve
2 there. You just can't let that go. I mean I think
3 that was standard practice for some of us at power
4 plants and a lot of places.
5 So, why didn't the staff say hey, this
6 is dandy but you need a second valve, no matter how
7 you call it, solenoid, manual, something. You have
8 got to be able to stop this thing, if that valve
9 doesn't do what it is supposed to do when the
10 radiation monitor says go closed.
11 MR. WILLIAMS: Well, let me go back to
12 our past, as far as a plant that has decay tanks or
13 liquid waste tanks. When you are releasing the
14 tank, you always calculate first of all that if you
15 release the tank entirely, you wouldn't exceed 10
16 CFR 20 limits. And also you calculate the dose on
17 that and you add that to your cumulative dose. And
18 if that doesn't go over the corollary limit or the
19 annual limit, then essentially you could release a
20 tank without knowing that it was going out in that
21 situation that we have been talking about. And you
22 would, obviously, catch it and it would be
23 something that you would report. And those curies
24 in that dose would be then added to the annual

1 reports. And then maybe they would put in an
2 isolation valve.
3 But I know the DMI where I worked, we
4 had isolation valves and we had the isolation by
5 monitor. And we had the operator who would monitor
6 the release and then, by the strip charts or
7 whatever, and close the manual valve or turn the
8 pumps off if we had anything above the setpoint
9 limits.
10 MEMBER SKILLMAN: Okay, thank you.
11 MR. BURKHART: If I can add. I'm Larry
12 Burkhart, the Branch Chief. We will take a look at
13 that, of course, in addition. So, we will take
14 that as something to look at.
15 MEMBER SKILLMAN: Thank you.
16 MR. WILLIAMS: Okay, we are still
17 talking about the gas waste management system.
18 KHNP proprietary version of the GALE Code was used
19 to calculate the gaseous effluent releases during
20 normal operations, including AOOs, similar to the
21 liquid waste management system and described in the
22 KHNP RAI technical responses that we received from
23 the RAIs.
24 The staff confirmed the methodology

1 basis and assumptions used to comply with the ECLs
2 and the design objectives for 10 CFR 20 and 10 CFR
3 50 Appendix I.
4 We also looked at the methodology basis
5 assumptions to assess radiological impacts due to
6 postulated failure of waste gas surge tank and the
7 charcoal bed leak. Again, we are talking about BTP
8 11-5, which the applicant described. We have
9 reviewed their process and analysis and we find
10 that acceptable.
11 We found no mobile or temporary
12 equipment or connections to permanently installed
13 equipment considered in the GWMS design and we also
14 looked at, again, 10 CFR 20.1406 Tier 1 and ITAAC
15 information tech specs and pre-operational testing
16 that they performed.
17 MEMBER STETKAR: Steve, stay on there
18 for a second. The third bullet addresses their
19 analysis of gaseous releases from a tank failure.
20 In the SER, you apparently asked them about that
21 and you said that the applicant stated that only
22 the results from the gas stripping operation source
23 term would be used in the accidental effluent
24 release calculations. The staff determined that

1 only using the gaseous effluent source term from
2 gas stripping operations would provide a reasonable
3 approach to the calculations.
4 So, okay, I went back to Table 11.1-8
5 in the DCD and, indeed, if I look at the gas
6 stripper source term for tritium, krypton species,
7 and xenon species, they are well above the other
8 sources of input to the gaseous waste processing
9 system. Not so much for iodine. Reactor drain
10 tank is the highest source term by far. And they
11 have factors of three or four or something like
12 that.
13 So, why are we focusing on the gas
14 stripper and not some other composite source term?
15 Because during normal operation, everything is
16 coming into the gas system. So, if I break, for
17 example, the surge header or whatever the heck they
18 call it, I am going to get the stew of whatever was
19 going in.
20 MR. GRAN: In essence, from my
21 understanding, that is what is done. So, like they
22 used the GALE Code to develop the source term. And
23 I guess prior to all the treatment through charcoal
24 delay beds and whatnot, they stopped the source

1 term there and take the curie figure without decay
2 or removal or anything.
3 MEMBER STETKAR: Right. But -- and I
4 don't do any of this. So, I don't know. I can
5 spell GALE because I can see it up there.
6 My question is, are they using only the
7 gas stripper source term. In other words, the gas
8 stripper iodine species or are they using an
9 amalgam of the gas stripper and the reactor drain
10 tank, where the gas stripper source term is going
11 to drive the results for tritium and krypton and
12 xenon, the reactor drain tank would drive the
13 results for iodine.
14 MR. WILLIAMS: We can take that as an
15 item but we would have to go back to BTP 11-5 and
16 go through the process that it describes and what
17 nuclides or source term that it tells us to use.
18 MR. GRAN: Yes, I would like to take it
19 back, too, because I am tempted to say we primarily
20 use the noble gases.
21 MR. WILLIAMS: And the reason I think
22 that is only considering the noble gases is anytime
23 you have a release that goes out, the iodines and
24 the particulates normally don't make it out because

they combine or stick to the walls and things like that, where the noble gases basically go out and that was --

MEMBER STETKAR: That might -- as I said, this is not something that I do. I just noticed that it didn't necessarily dominate all species. So, that might be a good answer. Thank you.

MR. WILLIAMS: Well one place that proved that out was during the TMI 2 accident. There was minimal iodine released and particulates because it all adhered to the inside of the reactor building walls and they read high whole body dose rates out of the stack because in helicopters they had and everything else only because of noble gases that were released from the accident.

I'm pretty sure that is the answer but we will check and make sure for you.

MEMBER STETKAR: Okay, thanks.

MR. WILLIAMS: Okay, page 11, the COL information items from the GWMS. We looked at the on-site vent stack design parameters and release point characteristics for the gases, the release points, the effluent temperatures, shape of the

1 orifice. Again, the offsite gaseous effluent doses
2 need to comply with 10 CFR 20 and 10 CFR 50
3 Appendix I and also for the COL applicant, they
4 need to do cost-benefit analysis for the gas waste
5 systems and provide PNIDs for site-specific items.
6 And there were no open items in Section
7 11.3. Any questions on 11.3?
8 MEMBER STETKAR: Yes, actually I have a
9 couple more questions. I'm a slow reader and an
10 even slower thinker, these days.
11 In Section 11, there is a fairly
12 extensive discussion about -- I've lost my place
13 here -- about something -- about the charcoal beds.
14 And it is really important to keep the charcoal
15 beds dry. It is really important not to have fires
16 in the charcoal beds. So, in a lot of places where
17 I have seen people use charcoal, I see people using
18 running fire protection lines to the charcoal beds.
19 MR. WILLIAMS: Right.
20 MEMBER STETKAR: I couldn't find any
21 connections to the fire protection system to these
22 particular charcoal beds. And in fact, you asked a
23 question about it and in the response to that
24 question, this is in Section 11.3.4.1.1 of the SER,

1 to give you a place to look, but the applicant also
2 described the use of inlet temperature sensors that
3 can monitor temperature conditions and stated that
4 the beds can be isolated in the event of a fire.
5 So, basically, they are claiming you
6 know they are never going to catch on fire and we
7 can isolate them, even if they do.
8 If I look at Chapter 9 of the DCD,
9 there is a table 9.5.1-2 that describes APR 1400
10 fire protection program conformance with NFPA 804.
11 It is a 70-page table. On sheet 37 of that table,
12 it says that the design conforms to the fact that
13 fixed water spray systems shall be provided for
14 charcoal absorber beds containing more than 100
15 pounds, 45.4 kilograms of charcoal. These beds are
16 a check of a lot bigger than that.
17 Now, if you look at NFPA 804, it is
18 written in the sense of ventilation systems. This
19 is not a ventilation system but it discharges
20 directly to an exhaust form the ventilation system.
21 So now my question is is it okay that
22 these particular charcoal beds don't have a fire
23 protection water spray. And if so, is that
24 consistent with NFPA 804 guidance?

1 MR. WILLIAMS: That, again --

2 MEMBER STETKAR: This is cross-cutting
3 across several areas, I realize that but I am
4 looking at a big chunk of charcoal and I am looking
5 at possible fires and a big chunk of charcoal.

6 MR. WILLIAMS: Yes, we will go back and
7 revisit that RAI and check back into the use of the
8 moisture instrumentations upstream and the
9 isolation that we talked about.

10 MEMBER STETKAR: I mean their basic --
11 I couldn't find any connections but again, I'm
12 pretty sure that there is no fire connection manual
13 automatic, anything to these charcoal beds. And at
14 one level, I am okay with that. On another level,
15 if they are saying they conform to all of the fire
16 protection codes and requirements, it is not clear
17 to me that they do, necessarily.

18 So, anyway, I have got it on the
19 record. That's all I wanted to do.

20 MR. WILLIAMS: Right. Again, as you
21 say, we have a lot of cross-cutting items like
22 this. We will talk to fire protection and we will
23 get an answer back to you.

24 MEMBER STETKAR: Thanks. The other

1 question that I have is I notice in two areas that
2 both the liquid waste management system tanks,
3 whatever they are, and the gaseous waste management
4 system stuff, because they don't have many tanks,
5 and the solid waste management system tanks, in
6 particular, the spent resin storage tanks, are all
7 vented to their respective rooms, which go to the
8 ventilation system. And in fact, in the DCD, there
9 are quotes that say things like each liquid waste
10 management system tank is provided with vent piping
11 that is terminated at the vicinity of the inlet
12 duct of the heating, ventilation and air
13 conditioning system.
14 It is unusual, in my experience, to
15 find tanks vented to the room, rather than being
16 vented to the gaseous waste treatment system,
17 especially tanks like high-activity spent resin
18 storage tanks. And I didn't see any questions
19 about that. So, you are apparently okay.
20 Is that now standard practice? So, my
21 basic question is why -- and I wanted to ask the
22 staff because you didn't ask any questions about
23 it. Did you look at those vents and why it's okay
24 to vent it to the room and to the basic building

1 ventilation system, rather than venting the gaseous
2 parts of the tanks to the gaseous waste processing
3 system itself, which is the more normal, in my
4 experience, design?
5 I went back and I looked at all of the
6 tanks in the auxiliary building. And the tanks in
7 the auxiliary building are vented to the equipment
8 drain tank and the equipment drain tank is one of
9 the inputs to the gaseous waste system. So, I got
10 a lot of the tanks in the aux building are taken
11 care of but the tanks in the waste processing
12 building itself, not so much.
13 MR. WILLIAMS: Well, that's something I
14 may have missed. If you go back and look at their
15 process flow diagram of the GWMS, it shows the RDT
16 nitrogen gas stripper, VCT vent, and the relief, it
17 shows them all going into a common header. That
18 was what I was used to seeing. And we used to call
19 that the vent header and that is what went over to
20 the waste gas tank prior to release.
21 MEMBER STETKAR: Right but I'm used to
22 seeing stuff from the radwaste system go into that
23 same header back.
24 MR. WILLIAMS: Yes.

1 MEMBER STETKAR: And this one doesn't.
2 That's why -- when I first looked at the drawing, I
3 started chasing sources of gas input to the gas
4 waste gas system because I was used to seeing a lot
5 more lines, which is what started me looking at
6 nitrogen and hydrogen systems. And I finally found
7 the fact that basically everything in the aux
8 building goes into the equipment drain tank, which
9 is one of the inputs into the waste gas header
10 here.
11 So, okay, I have a way of collecting
12 all of that stuff. And reactor drain tank, fine,
13 I've got that. I have got the volume control tank,
14 and I've got the gas stripper from the CVCS system.
15 So, those are big sources that I go look for. And
16 the other places that I'm used to looking for is
17 the actual waste treatment tanks themselves,
18 whether they are hold up tanks, if they have them
19 or whatever they are, whatever process they use and
20 didn't find it.
21 So, I'm curious whether that is okay.
22 MR. WILLIAMS: Well, now I'm curious.
23 MEMBER STETKAR: It is just unusual.
24 And it is explicit. Not only is it shown on the

1 drawings but there are words in the DCD itself that
2 I just quoted that says no, we just vent it to the
3 room and try to make sure it is close to the
4 ventilation exhaust inlet for the room.
5 MR. WILLIAMS: Okay, we'll go back and
6 take a look at that.
7 MEMBER STETKAR: Thanks. That's all I
8 have on the gas systems.
9 MR. WILLIAMS: Okay. Page 12 is
10 Section 11.4, Solid Waste Management System.
11 Again, we are looking at the design basis and
12 features, system description, processing methods
13 and capacities, seismic and quality group
14 classifications, performance characteristics,
15 instrumentation alarm systems, annual estimated
16 waste generation rates, alarm ALARA design
17 features, capability to move drums and HICs, and
18 provision for mobile or temporary equipment and
19 boundary definitions.
20 We found no direct liquid and gas
21 effluent releases originating from the SWMS. The
22 associated releases that feed into SWMS were
23 covered in 11.2 and 11.5 sections.
24 And then we looked for the basis for

1 design storage capacity for Class A, B, and C
2 radwaste. Next page.
3 The next thing we looked at was some
4 type of looking for a PCP or process control
5 program that would describe the operational program
6 for processing A, B, and C waste in accordance with
7 10 CFR 61.55 and 56. And we found in their DCD
8 they said they were going to adopt the NEI PCP
9 template 07-10A until plant-specific PCP is
10 developed to support plant operation. And this
11 approach was acceptable, given staff endorsement of
12 the NEI PCP template 07-10A.
13 We also looked at 10 CFR 20.1406 Tier 1
14 and ITAAC information, again, the tech specs and
15 the pre-operational testing for the GWMS. And we
16 also looked at epoxy coating systems that they are
17 using in the SRST rooms and compliance with 10 CFR
18 20.1406 and Reg Guide 421 and 154.
19 And for Section 11.4, we also looked at
20 the COL items that are listed. Offsite laundry
21 services is one of those. Again, you guys talked
22 about that with the applicant. Cost-benefit
23 analysis PIDs. PIDs mobile and temporary solid
24 radioactive waste processing and interconnection to

1 plant systems that they comply with 10 CFR 54(a) -
2 - 10 CFR 50.34(a), 1406 and Reg Guide 1.143.
3 That concludes 11.4. There is open
4 items in 11.4. Questions?
5 On to 11.5, Process Effluent Radiation
6 Monitoring and Sampling System, the PERMSS system.
7 We looked at design basis and features, system
8 descriptions, types, numbers, and locations of
9 PERMSS monitors and samplers, seismic and quality
10 group classifications, operational ranges,
11 sensitivity and alarms, systems calibrations and
12 provisions for building check sources, provisions
13 for automatic isolation and termination features
14 and ALARA design features.
15 This one actually we had a lot of items
16 to fill in on this as far as the number or the
17 types of the monitors, the samplers, and the other
18 thing we required, as the applicant stated, was
19 that not only having the table for all the
20 monitors, but also in 11.5, to give the description
21 and also describe anything as far as any
22 isolational properties that they have or any of the
23 valves, things like that. And we are getting to
24 the point where that is one or two of the open

1 items for the RAIs and we are evaluating that right
2 now to make sure we are in agreement with
3 everything they provided for all these different
4 requirements.
5 We also looked at the plant process
6 system, the effluent flow paths monitored by the
7 monitoring and sampling equipment. Again, the 10
8 CFR 20.1406 and associated ITAAC, tech specs, pre-
9 operational testing.
10 And the 11.5 we also looked at the ODCM
11 offsite dose calculation manual description. They
12 described that they would have an ODCM and the DCD
13 adopts NEI ODCM template 07-09A. That, again, is
14 endorsed by the staff, which is acceptable for the
15 DCD.
16 We also looked at the RCS leakage
17 detection and ensured that it complied with or
18 conforms with the Reg Guide 1.45 Rev. 1 and ANSI N
19 42.18-2004. And we looked at the primary-to-
20 secondary leakage detection and ensured the NEI 97-
21 06 compliance per the tech spec basis.
22 And the last part of 11.5 was, again,
23 the COL information items required by a COL
24 applicant. We looked at the aspects beyond PERMSS

1 design in accordance with the Reg Guide 1.12, Reg
2 Guide 1.33, Reg Guide 1.45, again, 10 CFR 50
3 Appendix I for the offsite doses for liquids and
4 gases, the ODCM, the set points related to the
5 ODCM, the REMP program, the Radiological Effluent
6 Monitoring Program, that is in NUREG-1301 they
7 committed to NUREG-0133 and the ODCM NEI document.
8 We looked at the analytical procedures
9 and sensitivity for the radioanalytical methods
10 type of sampling media that it was to be included
11 in the COL item. We also looked at the procedures
12 related to radiation monitoring instruments and
13 analytical procedures and sensitivity for
14 radioanalytical methods and sampling media type.
15 These all would be required of the COL
16 applicant. And except for the three open items,
17 three open questions I guess I will call it, for
18 11.5, we have been talking about them as we have
19 gone through this section. For 11.5-1, 11.5-2 we
20 requested the applicant to provide additional
21 information in the descriptions of the LWMS and
22 GWMS and not only in the table but also in the
23 verbiage in the text to give us descriptions in
24 11.5.

1 One last open item was 11.5-3, which
2 was a request for clarification of the information
3 on the primary-to-secondary leak detection
4 calculation in the DCD, apparently it is 11(b). We
5 have since before we did these slides, the staff
6 has reviewed and revised the response to this
7 question. Their response was deemed to be
8 acceptable and we are tracking this RAI now as a
9 confirmatory item. So, that was the second one of
10 the five.
11 So, that remains the resolution we have
12 of out of the five open items we had, we are down
13 to three open items left and expect it to be closed
14 in Phase 4 of the DCD review.
15 Also, just to summarize, as far as the
16 conclusions, the COL items that need to appear in
17 the application, the offsite liquid and gas offsite
18 doses, liquid tank failure analysis, the PIDs, the
19 epoxy coating system, related operational
20 analytical and radiation monitoring procedures,
21 cost-benefit analysis, the PCP, and the ODCM.
22 And that's the final slide. Any
23 questions?
24 CHAIRMAN BALLINGER: No questions.

1 Thank you again.
2 MR. WILLIAMS: Thank you.
3 CHAIRMAN BALLINGER: We are finished
4 with what we were supposed to do today except for
5 Section 2.3 from the staff. So, is the staff
6 ready? You're ready.
7 Recall that KHNP presented 2.3 at the
8 last meeting.
9 MR. ROY: My name is Tarun Roy. I'm
10 the NRO Project Manager responsible for
11 coordinating staff review for APR 1400 Chapter 2
12 Design Certification Application. We have
13 presented before 2.1, 2.2, 2.4, and 2.5. Today we
14 are presenting 2.3, Chapter 2, Section 2.3.
15 And Jason White is our DCD Section 2.3
16 is reviewing and Jessica Voveris, also.
17 During this meeting the staff plans to
18 make a presentation of the Chapter 2 Site
19 Characteristics, Section 2.3, SER with an open
20 item.
21 Staff issued a total of ten questions
22 to the applicant requesting additional information.
23 And twelve initial clarification questions.
24 Presently, we have eight remaining confirmatory

1 items. There is no open items in this section.
2 With that, I now turn the presentation
3 over to technical reviewers Jason White and Jessica
4 for Section 2.3. Jason.
5 MR. WHITE: Good afternoon. My name is
6 Jason White. Jessica Voveris and I are
7 meteorologists in the Office of New Reactors. We
8 are part of the review team for Sections 2.0 and
9 2.3. And today we will be discussing Section 2.3.
10 CHAIRMAN BALLINGER: Can you tell me
11 what the weather is going to be like on Friday
12 afternoon?
13 MR. WHITE: It's still in flux.
14 MEMBER POWERS: Just tell him it is all
15 clear except for Massachusetts.
16 MR. WHITE: The review of Section 2.3
17 involves the five sections of the APR 1400 DCD
18 listed as Sections 2.3.1 through 2.3.5 as shown on
19 the slide. In addition to those sections, we also
20 have combined license information items, which will
21 be discussed later in the presentation.
22 For each COL application, an applicant
23 will have to provide the site-specific information
24 outlined in these sections and compare it to the

1 site parameters listed in Tier 1, Table 2.1-1 and
2 Tier 2, Table 2.0-1. Next slide.
3 As Tarun mentioned, during the course
4 of this review, the staff asked 12 initial
5 clarification questions and 10 RAIs. And
6 currently, the Safety Evaluation Report contains
7 eight SE confirmatory items and zero SE open items.
8 MS. VOVERIS: As Jason mentioned
9 previously, my name is Jessica Voveris. I am also
10 one of the meteorologists who is involved on the
11 KHNP review of Section 2.3.
12 So, the applicant identified
13 meteorological site parameters related to both
14 climatic extremes and regional meteorological
15 phenomenon, which includes severe weather and, in
16 addition, atmospheric dispersion, which pertains to
17 both accident and routine releases.
18 A COL applicant is required to compare
19 its site characteristics to the APR 1400 site
20 parameters, which the staff reviewed under SRP
21 Section 2.0. The staff ensured that the postulated
22 site parameters are representative of a reasonable
23 number of sites that maybe considered for a COL
24 application and that the site parameters are

clearly defined for a potential COL applicant that may reference the APR 1400 design.

MEMBER SKILLMAN: Jessica, how do you define reasonable number of sites?

MS. VOVERIS: That's a good question. It is among -- it is a discussion among our group of how do we interpret a reasonable number of sites. Perhaps one of our other reviewers can add to that.

CHAIRMAN BALLINGER: I mean for example, as I recall with the other sections, we had this long discussion about wet-bulb temperature and concluded --

MEMBER STETKAR: I was going to follow-up on that with the staff.

MS. VOVERIS: We were going to bring it up for you guys.

CHAIRMAN BALLINGER: Good. Okay, so you got it.

MEMBER SKILLMAN: Well, I'm still eager to understand reasonable.

MR. QUINLAN: My name is Kevin Quinlan. I was one of the meteorologists who also reviewed this section. It tends to vary a little bit from

1 parameter to parameter. Generally, though, in this
2 case it was could it be sited in really two or more
3 sites. They compared it against some of the
4 existing sites in the country and we also compared
5 the parameters against some of the existing nuclear
6 sites in the country. And if it could be sited at
7 really a handful or more of those sites, then that
8 was considered to be a reasonable number.
9 MEMBER SKILLMAN: With more than --
10 okay. I'm sorry. Talk about that handful.
11 MR. QUINLAN: They compared against
12 some of the other sites that the NRC has already
13 reviewed and accepted and then many of the COL and
14 ESP sites we looked at. And it was with the
15 understanding, and KHNP would understand this as
16 well, that should they be outside the balance of
17 the -- if the COL applicant comes in and is outside
18 the bounds of the DCD, then they would need to do a
19 departure analysis.
20 MEMBER STETKAR: Let's follow-up on
21 that. And I have to be careful because I am
22 staring at something that says official use only,
23 sensitive internal information, which is a draft
24 SER for a particular certified design. So, I have

1 to be a little bit careful here. But which
2 particular sites? Because for the wet-bulb
3 temperature, the only design certifications that we
4 have seen, and we have seen them all, that have
5 temperatures equal to or lower than the 81 degrees
6 Fahrenheit for this one are the USABWR and the
7 USEPR. And the USEPR was never certified. So,
8 that is what it is. It is not a certified design
9 for any site.
10 The USABWR, the only one that we have
11 seen a COL is the South Texas site and they had to
12 increase their wet-bulb temperature from 81 degrees
13 to 88.3 degrees to get the darn plant built and
14 designed.
15 So, I am interested in what sites the
16 staff has approved for any of the design
17 certifications that have this low wet-bulb
18 temperature.
19 MR. WHITE: In this case -- did you
20 want to handle this or do you want me to?
21 MS. VOVERIS: I mean based on --
22 MEMBER STETKAR: ESBWR, you have
23 approved.
24 MS. VOVERIS: Correct.

1 MEMBER STETKAR: That had 88 degrees.
2 MS. VOVERIS: Right.
3 MEMBER STETKAR: Seven degrees higher.
4 AP 1000 had 86.1 degrees; 5.1 degrees higher.
5 MS. VOVERIS: Correct.
6 MEMBER STETKAR: So, I'm curious about
7 how 81 degrees is something that the staff has
8 approved for any site in the United States.
9 MR. WHITE: In this case the staff --
10 well, I said it varies a little bit from parameter
11 to parameter but in this case, the staff looked at
12 ASHRAE data from across the country and determined
13 that there were a number of states and a number of
14 sites in the country that this would be able to be
15 sited at.
16 MEMBER STETKAR: Okay.
17 MR. WHITE: We did issue an RAI that
18 spoke directly to this issue that I think came
19 short of suggesting that they raise the wet-bulb
20 temperature but certainly pointing out that for
21 many of the sites in the southeast, which is where
22 most of the COL and ESP applicants that we have
23 seen have submittals, it falls short of the wet-
24 bulb temperatures at those sites. And I believe

1 that we say in the SE that -- or I can't remember
2 if we used the exact words, but that they would
3 need to do a departure analysis, which we have seen
4 for sites such as Turkey Point and Summer.
5 MS. VOVERIS: If you want enact an
6 exact number of states based on the ASHRAE data, it
7 is about eight.
8 MEMBER STETKAR: Eight?
9 MS. VOVERIS: Yes.
10 MEMBER STETKAR: Out of 50 or about of
11 --
12 MS. VOVERIS: It is about the third
13 western side of the United States. They are big
14 states but California, Montana, Wyoming, New
15 Mexico, Nevada, Idaho, Utah.
16 MEMBER STETKAR: Dry states.
17 MS. VOVERIS: Yes, correct.
18 CHAIRMAN BALLINGER: States that none
19 of which have nuclear plants.
20 MS. VOVERIS: California still has one.
21 MEMBER STETKAR: Arizona.
22 CHAIRMAN BALLINGER: Arizona.
23 MEMBER STETKAR: My point is that, and
24 I think Dick is trying to get to this what are we

1 certifying a design for? Are we certifying a
2 design that can be built anywhere in the United
3 States, as long as it is precisely one specific
4 little area of the United States or are we
5 certifying a design for the United States?
6 MS. VOVERIS: So, those eight states
7 that I did mention would allow them to remain under
8 that wet-bulb site parameter. Any other state,
9 they would have to do an additional -- a COL
10 applicant would have to do additional analysis in
11 regards to a departure for that.
12 MEMBER STETKAR: So, we are certifying
13 a design that in -- is that in -- I'm going to
14 exclude Alaska and I'm going to exclude Hawaii for
15 the moment -- that in 40 of the 48 contiguous
16 states we are guaranteeing that the COL applicant
17 will have to take a departure.
18 MS. VOVERIS: Yes.
19 MEMBER STETKAR: Okay, thank you.
20 That's what I wanted to get on the record.
21 MEMBER SKILLMAN: What triggered my
22 interest in this is the idea that this plan used
23 Prairie Island as a surrogate location. Well,
24 that's just dandy until you have been there from

about the first of November until about the 15th of March. Guess what? Heat sink is no problem. There is lots and lots of cooling.

But if you take the plant that you would site at Prairie Island and put it in Southern California, or Southern Florida, Southern Texas, then the heat sink temperature is going to be an issue.

And so this is an economic issue. It is not a safety issue from my perspective. If KHNP wants to offer a design that has limitations, quite candidly, that's their business but some customers might say why didn't you give me three or four more degrees on all of them at heat sink because it will upset my heat exchanger design and, particularly, my air conditioning design where I have the greatest threat to margin for heat transfer area.

So, it just seems like there is an opportunity here on the front end, quite candidly, to make the air conditioning systems with more margin or HR, the well water heat removal systems just fractionally larger so this is not an issue for anybody siting a plant in this country.

And to me, it ties back to this idea

1 that part of the plant is designed for 60 years and
2 part of it is designed 40 years. That is a mindset
3 that says if we do this right, we really don't have
4 to buy all those big heavy redundant robust
5 equipment. Well, the thing that has kind of held
6 the industry together for all of my career has been
7 big, heavy robust equipment. And the designers
8 that have taken the high ground and said we are
9 going to put a few more feet on these heat
10 exchangers and a few more square feet in the air
11 conditioning are the ones that survive.
12 So, it just seems like there is an
13 opportunity here that will benefit KHNP, that will
14 benefit the staff and that will ultimately benefit
15 a future applicant and it isn't a big change.
16 So, that's why I raised the question.
17 I appreciate John's weighing into it.
18 MEMBER STETKAR: It can be a big change
19 because I'm aware, and I won't mention the plant,
20 of an operating plant situated in the southern part
21 of the United States that was when they looked at
22 their original HVAC system design, they had to
23 increase the HVAC cooling capacity, both safety-
24 related and non-safety-related, by a factor of

1 three compared to the original design for that
2 plant.
3 Now, that isn't just more tubes and
4 heat exchangers. They actually had to make room to
5 put compressors, and chillers, and all kinds of
6 stuff in that plant. So, it is not an
7 inconsequential expense on the part of the COL
8 applicant.
9 MEMBER SKILLMAN: I agree. My point is
10 to do it at this point is really an advantage for
11 everybody, as opposed to waiting until later and
12 trying to argue a departure.
13 MEMBER STETKAR: If you want to
14 actually build these plants in the United States of
15 America.
16 MEMBER SKILLMAN: Fair enough. Okay,
17 thank you.
18 MR. COOK: Mr. Skillman, this is Chris
19 Cook. I'm Chief of the Hydrology and Meteorology
20 Branch that is here. And I guess I just wanted to
21 add on just a little bit. Although it's moving on,
22 so I'm certainly willing to stop if you don't want
23 to hear anymore. And I know it is late in the day.
24 MEMBER SKILLMAN: I'm happy to hear.

1 Please.

2 MR. COOK: Because the questions you

3 bring up about reasonableness was in fact something

4 that the staff, as Jessica was saying, did discuss

5 and debate. And in fact, the staff asked an RAI,

6 it is RAI 2.3.1 -- sorry am I looking at that

7 right, 2.3.1? That was the section number. It is

8 2.3.1-3. And we asked this particular RAI

9 specifically on this topic because staff, itself,

10 was sort of wondering about that and the

11 reasonableness in the number of sites. And it was

12 something that we sort of came to because it was,

13 in fact, you know the value that we are looking at

14 is how do we define reasonable. It is not could it

15 be sited everywhere.

16 And this is something that has come up

17 before I know in seismic areas as well because not

18 all the plants are able to be sited in every

19 seismic location because the seismic hazard changes

20 across the United States.

21 So, we looked at it. In fact, there

22 were a number of meteorologists in the branch that

23 went out and looked at it and found that there were

24 eight different states that this could be sited in,

1 not just spots but states.
2 And so based on that and based on a
3 thoughtful consideration, that is where we came to
4 the conclusion that it was reasonable to allow this
5 to go forward but we certainly did feel it was
6 necessary for staff to ask the question and to get
7 the applicant on the record regarding why they
8 selected this value.
9 MEMBER STETKAR: For the record, since
10 you brought up seismic, the discrepancies in
11 seismic tend to be that they don't need the
12 seismicity of the western United States, which is a
13 small fraction of the land area of the United
14 States of America. We are talking about a large
15 fraction of the land area of the United States of
16 America in the 40 states where they cannot meet,
17 for example, the wet-bulb temperature.
18 So, we are talking about fractions of
19 the country's land area where you could possibly
20 put one of these things without a COL applicant
21 being forced to take a departure.
22 And that's okay. As Dick mentioned, if
23 KHNP wants to put this COL applicants at that risk
24 of going through all of the gymnastics that they

1 need to do to justify departure or make changes to
2 the design because they can't build the plant where
3 they want to build it, that's fine. That's a
4 decision. We just have to be clear that that is
5 apparently their decision.
6 MR. COOK: Correct. And we looked at
7 the ASHRAE database that was there for the extreme
8 wet-bulb. And out of those, it is approximately
9 one-third of the stations. Obviously, there aren't
10 stations in every single location but it was
11 approximately one-third of the locations that were
12 reporting information allowed us or allowed the --
13 or were not exceeded by this temperature standard
14 of 81 degrees.
15 Be careful, by the way, in the SER, in
16 your discussion of that response to question 2.3.1-
17 3 it says the NRC staff concludes that this design
18 parameter -- this is again the wet-bulb temperature
19 -- the NRC staff concludes that this design
20 parameter allows the plant to be sited at a
21 reasonable number of sites across the United States
22 in accordance with SRP Section 2.3.1(IV)(3). And
23 there is some intermediate discussion.
24 It says because previous certified

1 designs have used non-coincident wet-bulb
2 temperature site parameter values equal to those of
3 the APR 1400, the staff accepts the basis for which
4 the applicant has derived the site parameter. I
5 believe that only one previous certified design has
6 that, that being the USABWR. And in fact, nobody
7 has built one of those here. And the only one who
8 tried to build it had to take a departure.
9 MR. COOK: Thank you for that. I agree
10 the language should be --
11 MEMBER STETKAR: So, be careful about
12 the language in terms of referring back to
13 certified designs. The applicant has referred to
14 the ABWR and EPR as if they are certified designs.
15 EPR certainly is not.
16 MR. WHITE: We understand the comment.
17 Thank you.
18 MR. MAZAIKA: This is Mike Mazaika,
19 another one of the meteorologists. I would just
20 like to clarify that it is not just a single value
21 that that zero percent exceedance value is
22 exceeded. And this gets into Chapter 9. But they
23 look at multiple hours, periods of record that they
24 sweep through being able, the ultimate heat sink

1 cooling system being able to handle that heat load.
2 So, this is a discrete value and not
3 necessarily a value that has to be met or not. It
4 is a starting point, actually.
5 MEMBER SKILLMAN: Well, actually, I
6 don't agree with that.
7 I'm one of the guys that had to sit at
8 a plant and try to justify a change to the
9 temperature for the ultimate heat sink. And I
10 will tell you, working at a 20- or a 30-year-old
11 plant with installed hardware that is moldy-oldie
12 and that is fouled, trying to eke out a few more
13 degrees of the LMTD is A Herculean task. And the
14 way you prevent that from happening is to make sure
15 that the originally installed equipment has margin
16 and a lot of it.
17 And we are at a point on this
18 application where this designer could conceivably
19 provide a few more degrees of LMTD by changing a
20 couple of big heat exchangers and it will save the
21 day 20 years from now or 10 years from now.
22 And as John said and as I said earlier,
23 this is their decision and I'm not judging it. I'm
24 just saying please give consideration to what we

are saying because the pain for the change is great and the cost is great later. It does affect building design, square feet, size of the heat exchanger and length, LMPD. It might change flow rates but all of that is involved with these very subtle parameters. That is all I am saying.

MEMBER STETKAR: It also reflects on this whole notion of a Part 52 certified design where the expectation is that people should not be expected to take departures or exceptions to that design.

And this is the whole idea is you certify the design. There are a few site-specific parameters that might need tweaking -- might. But it is not the expectation that people are going to have to take a departure or an exception to that certified design.

So you know in terms of looking at this from the staff's perspective, even, let's say that we are going to have 50 potential applicants come in with this and decide that they want to build this design. It is certainly a possibility, once it is certified.

We are now setting ourselves up in a

1 situation where is it consistent with the basic
2 premise of a Part 52 licensing process.
3 MR. WHITE: We understand the comment.
4 Thank you.
5 MS. VOVERIS: Thank you for the
6 question.
7 Next slide, please. Thank you.
8 The climatic site parameters are
9 selected to ensure the facility is being designed
10 such that potential threats from the physical
11 characteristics of a potential site such as
12 regional climatic extremes and severe weather will
13 not pose an undue risk to the facility in
14 accordance with GDC 2.
15 A COL applicant needs to demonstrate
16 that its meteorological site characteristics fall
17 within the APR 1400 site parameters pursuant to 10
18 CFR 52.79(d)(1). Should the meteorological site
19 characteristics not fall within the APR 1400 site
20 parameters, the applicant must provide
21 justification that the proposed facility is still
22 acceptable at the proposed site.
23 The applicant's winter precipitation
24 site parameters are used to determine the winter

1 precipitation wide loads on the roofs of seismic
2 category I structures, as discussed in Chapter 3 of
3 the DC. The staff compared the applicant's winter
4 precipitation site parameter values against
5 snowfall data recorded at weather stations located
6 throughout the contiguous United States and found
7 that the applicant site parameter values do bound
8 most sites. The staff, therefore, concluded that
9 there is reasonable assurance that the applicant's
10 winter precipitation site parameter values can be
11 expected to be reasonable -- representative of a
12 reasonable number of potential COL sites.
13 The staff also reviewed the applicant's
14 -- back a slide.
15 MR. WHITE: Go back, please. Backup
16 slide six?
17 MS. VOVERIS: Seven.
18 MR. WHITE: Slide seven, please.
19 MS. VOVERIS: Thank you. The staff
20 reviewed the applicant's extreme wind speed site
21 parameter value of 145 miles per hour for a 50-year
22 return period 3-second wind gust speed by comparing
23 it to the wind speeds presented in ASCE 7-05, which
24 is the American Society of Civil Engineers Standard

1 for the minimum design modes for building some
2 other structures.
3 The staff found that the APR 1400
4 extreme wind speed site parameter value does bound
5 the ASCE 7-05 wind-loading design criteria for the
6 entire Continental U.S. Consequently, the staff
7 concluded that the applicant's extreme wind speed
8 site parameter is representative of a reasonable
9 number of sites that may be considered within a COL
10 application.
11 The staff reviewed the applicant's
12 tornado site parameters by comparing them to the
13 design basis tornado characteristics specified in
14 Revision 1 to Reg Guide 1.76. The staff found that
15 the tornado parameters chosen by the applicant are
16 the same as the tornado intensity Region I design
17 basis tornado characteristics specified in Reg.
18 Guide 1.76, where Region I represents the central
19 portion of the U.S. where the most severe tornadoes
20 typically occur with exceedance probabilities of
21 ten to the negative seven per year. The staff
22 finds this acceptable as the applicant followed the
23 guidance.
24 The staff reviewed the applicant's

1 hurricane site parameters, by comparing them to the
2 design basis hurricane wind speed contour maps,
3 representing exceedance probabilities of ten to the
4 negative seven per year provided in Reg Guide
5 1.221.
6 Staff concluded that the applicant
7 followed staff guidance and finds the hurricane
8 site parameter values acceptable.
9 MEMBER STETKAR: So, from a wind
10 perspective, I have reasonable assurance that I
11 will not exceed the design basis hurricane or
12 tornado wind speeds for this design, for any
13 location at the plant, at a frequency higher than
14 about one in 10 million per year. And yet, for 40
15 out of the 48 states, I know that I'm going to have
16 to take an exception for the design of my cooling
17 systems.
18 Does that strike you as a bit odd? I
19 mean, honestly, they are designing something to ten
20 to the minus seven wind speeds for tornadoes and
21 hurricanes in the United States and just not
22 considering heat removal.
23 CHAIRMAN BALLINGER: In the interest of
24 time --

1 MEMBER STETKAR: No, I'm done. I made
2 my point. That's fine.
3 MEMBER REMPE: Now that that point has
4 been closed out, I had a question I brought up at
5 the last meeting and you guys weren't around. And
6 I would just like to understand a statement that is
7 on page 2-45. It has note that the applicant
8 apparently used the term exclusionary boundary in
9 site boundary interchangeably, although these terms
10 are not necessarily the same for all facilities.
11 And basically, you didn't really issue,
12 I don't think any requests that they make any
13 changes to the document. So, I guess you decided
14 it was okay. But I just don't understand that
15 sentence and what was done about it because I know
16 I asked the applicant and they said oh, we didn't
17 know that. So, could you explain this?
18 MR. WHITE: We understand your question
19 and we noted that the term was used interchangeably
20 a few times and we wanted to make that note because
21 we wanted to try and avoid any confusion between
22 the site boundary and EAB.
23 MEMBER REMPE: I understand that but
24 what was done and why was it not important that

1 they didn't have to change things? Because to me,
2 they should be aware of the differences. I think
3 they are.
4 MR. WHITE: Well, that was our
5 conclusion, that they are aware of the differences
6 but we wanted to point it out as a staff to make
7 note of it because when you are calculating x/Q
8 values for the EAB and the site boundary, they are
9 distance-specific. So, we wanted to make note that
10 even though they are using those terms
11 interchangeably, it is important to specify exactly
12 which one you are making the calculations for.
13 And if you look at their table, their
14 site parameters table where they actually include
15 the values, they do use the terms appropriately.
16 MEMBER REMPE: But there are no
17 changes. I mean out of the places we see request
18 for changes or anything like that, you made no
19 changes that you requested. But you have some
20 places where you needed to point that there needed
21 to be changes?
22 MR. WHITE: We did not make any
23 requests. You are correct. We felt that they made
24 the appropriate calculations looking at the values

1 that they had listed in their site parameters.
2 But I do understand your point. If we
3 made the statement, you were wondering why we don't
4 request the correction for the actual document.
5 MEMBER REMPE: Or perhaps maybe in your
6 draft SE you should be more specific and say hey,
7 we didn't make -- that they did use things
8 correctly in the calculations and so no changes
9 were needed or something because it just kind of
10 sounds like well, they messed things up but we went
11 on.
12 MR. WHITE: Okay. We understand your
13 question. We appreciate the point.
14 MS. VOVERIS: So, the ambient design
15 air temperatures, the applicant provided zero
16 percent, one percent, and five percent annual
17 exceedance air temperature site parameter values
18 for use in the design of HVAC systems and as zero
19 percent and five percent ambient exceedance
20 temperatures, site parameter values for the
21 operation of the cooling tower.
22 The staff reviewed the applicant's air
23 temperature site parameters by comparing them
24 against temperature data compiled by ASHRAE for

1 over 600 weather stations scattered throughout the
2 Continental United States. And by comparing the
3 APR 1400 site parameters to site parameters for
4 previously certified designs and to adjust site
5 characteristics for approved COL applications.
6 The staff concludes that the postulated
7 air temperature site parameters are representative
8 of a reasonable number of sites that may be
9 considered for a COL application.
10 Are there any questions regarding the
11 temperatures, I mean additional for the wet-bulb?
12 MR. WHITE: The next slide addresses
13 the short-term and long-term dispersion site
14 parameters. Regarding bullet one, the exclusionary
15 boundary are EAB and outer boundary are the low-
16 population zone or LPZ atmospheric dispersion x/Q
17 value site parameters are used in DCD Tier 2
18 Chapter 15 to help demonstrate that the offsite
19 radiological consequences of accidents meet
20 specified radiation dose guidelines are specified
21 in 10 CFR 52.47.
22 The staff reviewed the applicant's EAB
23 and LPZ x/Q site parameter values by comparing them
24 to the corresponding site parameter x/Q values in

1 the AP 1000 certified design and to the
2 corresponding site characteristic values provided
3 in COL and ESP applications that the NRC staff has
4 reviewed and approved.
5 The staff's comparisons show that the
6 APR 1400 site parameter x/Q values bound all the
7 site parameter x/Q values in the AP 1000 DC and the
8 x/Q site characteristic values provided in the
9 approved COL and ESP submittals.
10 Consequently, the staff finds that the
11 applicant's EAB and LPZ x/Q site parameter values
12 should bound a reasonable number of sites that may
13 be considered within a COL application. On the
14 basis of this, the staff finds the proposed site
15 parameters acceptable.
16 Regarding bullet two, the main control
17 room and technical support center x/Q site
18 parameters are used in DCD Tier 2 Chapter 15 to
19 help demonstrate that the radiological consequences
20 of design basis accidents in the control room and
21 technical support center meet radiation dose
22 guidelines specified in GDC 19.
23 The applicant considered using publicly
24 available meteorological or met data from six U.S.

1 nuclear power plant sites for this analysis. To
2 address the absence of a single site providing
3 limiting x/Q values for the APR 1400, the on-site
4 x/Q values were analyzed using the five-year
5 Prairie Island met hourly data and the resulting
6 x/Q values were increased by 50 percent, such that
7 the model on-site x/Q values became bounding for
8 most of the met data sets considered.
9 The NRC staff reviewed the overall
10 quality of the met data for Prairie Island and
11 found the data to be consistent with the guidance
12 in Reg Guide 1.23 and, therefore, acceptable for
13 use in calculating the x/Q values.
14 The NRC staff reviewed the applicant's
15 ARCON96 control room atmospheric dispersion
16 calculations and the resulting x/Q values. The
17 staff did confirm its own confirmatory ARCON96
18 calculations for the control room. Based on
19 evaluation of the met data, the atmospheric
20 dispersion calculations and the added 50 percent
21 margin to the x/Q values, the NRC staff finds that
22 the applicant's on-site x/Q values to be reasonable
23 for use as site parameters and on-site dose
24 assessments.

1 Regarding the third bullet on the
2 slide, the APR 1400 DCD utilizes routine release
3 annual average atmospheric dispersion x/Q and
4 deposition D/Q factors in DCD Tier 2 Chapter 11 to
5 calculate the offsite concentrations and dose
6 consequences from normal operations to demonstrate
7 compliance with the offsite radionuclide
8 concentration criteria in 10 CFR Part 20 and the
9 dose criteria in Appendix I of 10 CFR Part 50.
10 The staff reviewed the applicant's
11 routine release x/Q and D/Q values by comparing
12 them to the corresponding site characteristics in
13 the other NRC review and approved ESP and COL
14 applications, as well as the corresponding site
15 parameter values specified for the NRC-approved AP
16 1000 plant design.
17 This comparison shows that the APR 1400
18 design bounds the site characteristics for most of
19 the COL and ESP sites and equals the site boundary
20 site parameter values for the AP 1000 design.
21 Consequently, the staff finds the
22 applicant's routine release site parameter x/Q and
23 D/Q values should bound the reasonable number of
24 sites that may be considered within a COL

application.

There are eight FSAR confirmatory items that the staff is tracking and will be looking to close out. The confirmatory items on this slide relate to updating tables in the FSAR to correct the temperature conversion and to identify the dry-bulb temperature values, revising the FSAR to include design ambient temperature exceedance values, and updating tables to identify the ambient temperature exceedance values.

The confirmatory items on this slide relate to updating the FSAR to include x/Q values for the TSC, updating the FSAR to include a definition for effective x/Q, and up the FSAR tables for references to the MCR and TSC x/Q values.

The APR 1400 DCD contains three meteorological-related COL information items. For COL information item 2.01, the COL applicant is to demonstrate that the design meets the requirements imposed by the site-specific parameters and conforms to all design commitments and assistance criteria.

For COL information item 2.31, the COL

1 applicant is to provide site-specific information
2 on meteorology. For COL information item 2.32, the
3 COL applicant is to perform the radiological
4 consequence analysis and demonstrate that the
5 related dose limits specified in 10 CFR 50.34 and
6 GDC 19 are not exceeded, if the site-specific x/Q
7 values exceed the bounding values described in the
8 FSAR.
9 The staff finds the scope of the
10 applicant's COL information items to be
11 appropriate.
12 In conclusion, all of the regulatory
13 requirements for Section 2.3 have been satisfied.
14 There are no remaining open items and there are
15 eight remaining confirmatory items that the staff
16 will be looking to close out, once we receive
17 Revision 1 of the DCD.
18 This concludes our presentation. Are
19 there any additional questions?
20 CHAIRMAN BALLINGER: Questions? Could
21 we get the bridge line open?
22 While we are getting the line open, are
23 there any questions from members in the room?
24 Hearing none. I don't hear the normal

1 crackling and popping. Yes, now we hear it.
2 If there is anybody out there on the
3 line, would you please identify yourself so we will
4 know that there is somebody on the line out there?
5 MS. BANERJEE: This is Maitri but I
6 have no questions.
7 CHAIRMAN BALLINGER: Thank you, Maitri.
8 Are there any other members of the public that are
9 out there that wish to make a statement?
10 Hearing none, we will close the line.
11 Thank you very much.
12 As is our custom, we would like -- can
13 we go around the table and get comments from
14 members? We will start with Margaret.
15 Harold?
16 MEMBER RAY: No.
17 CHAIRMAN BALLINGER: Dick?
18 MEMBER SKILLMAN: Yes, I think that the
19 issue of 60 versus 40 years needs to be addressed
20 on this application. Thank you.
21 CHAIRMAN BALLINGER: Dr. Powers?
22 MEMBER POWERS: No.
23 CHAIRMAN BALLINGER: Matt?
24 MEMBER SUNSERI: I know it has been a

long day but I appreciate everybody's interaction. Thank you.

MEMBER STETKAR: Nothing more, thank you.

CHAIRMAN BALLINGER: Jose?

MEMBER MARCH-LEUBA: Nothing.

CHAIRMAN BALLINGER: Charles?

MEMBER BROWN: Nothing at this point. I will wait and see what the revisions are for the TG set stuff.

CHAIRMAN BALLINGER: Joy?

MEMBER REMPE: I agree with Dick's point about 60 and 40.

But I would also like to emphasize the point that was raised earlier about when the staff excludes reviewing something such as load following, as Harold pointed out, it is not just the fuel. So, yes, it may come up in the section on the fuel but there needs to be something up front in whatever the staff produces that says that even though -- unless the DCD changes, that even though there are a lot of statements in there in other sections about load following, we did not consider it. Because I can see somebody might come

1 up with a new fuel and say well, this is ready to
2 go and I think that that should be clarified.
3 Thank you.
4 CHAIRMAN BALLINGER: Well, I would like
5 to thank everybody for the presentations. It was a
6 long day. As you realize, we ask questions just
7 about anything. So, I would like to remind
8 everybody that for future presentations, don't just
9 stick to the RAIs. We are going to make
10 presentations regarding every part of the chapters
11 in the future so that we don't have any confusion
12 and additional questions that might get answered.
13 But having said that, we appreciate
14 everybody's presentations and this meeting is
15 adjourned.
16 (Whereupon, the above-entitled matter
17 went off the record at 5:24 p.m.)
18
19
20
21
22
23
24

1

2

3

4

5

NON-PROPRIETARY

APR 1400 DCA
Chapter 10: Steam and Power Conversion System

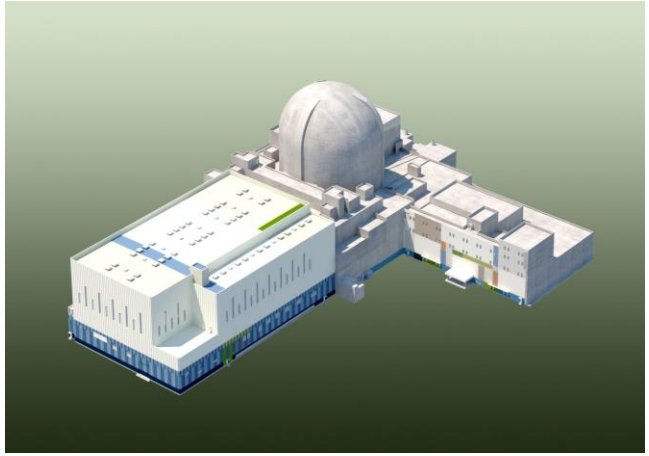

KEPCO/KHNP

Oct. 04. 2016

ACRS Meeting (Oct. 4 . 2016)

Contents

- Overview of Chapter 10
  - List of Submitted Documents
  - RAI Summary
- Steam and Power Conversion System
  - Subsection Outline
    - 10.1 Summary Description
    - 10.2 Turbine Generator
    - 10.3 Main Steam System
      (Key Review Items : FAC)
    - 10.4 Other Features
- Summary

Overview of Chapter 10

- **List of Submitted Documents**

Document No.	Title	Revision	Type
APR1400-K-X-FS-14002-NP	APR1400 Design Control Document Tier2 : Chapter 10 Steam and Power Conversion System	0	DCD
APR1400-K-X-IT-14001-P	APR1400 Design Control Document Tier 1	0	DCD

- **RAI Summary**

No. of Questions	No. of Responses	Not Responded	No. of OI
71	68	0	17

Steam and Power Conversion System

- **Subsection Outline**

Section	Title	Description	Presenter
10.1	Summary Description	The function of the steam and power conversion system is to convert the heat energy generated by the nuclear reactor into electrical energy.	Seo, Sung-Je
10.2	Turbine Generator	The Turbine Generator(TG) converts the energy of the steam produced in the two steam generators (SGs) into mechanical shaft power and then into electrical energy.	Kauffman, Storm
10.3	Main Steam System	The Main Steam System(MSS) is to transport steam generated in the SGs to the high-pressure turbine during normal power operation. The MSS extends from the SG nozzles up to the turbine stop valves. The MSS has two SGs and two main steam lines from each SG to the main steam common header.	Seo, Sung-Je
	Key Review Item (FAC)	Five open items related to FAC are included in this key review items.	Hwang, Kyeong Mo

Steam and Power Conversion System

Section	Title	Description	Presenter
10.4	Other Features of the Steam and Power Conversion Systems		Choi, Joon Wan
	Steam Generator Blowdown System	This system is to assist in maintaining the chemical characteristics of the secondary side water within permissible limits.	
	Auxiliary Feedwater System	This system is to provide an independent safety-related means of supplying auxiliary feedwater for the decay heat removal to the steam generators.	

10.1 Summary Description

- The steam and power conversion system comprises the following major process systems :
  - Turbine Generator(T/G)
  - Main Steam System(MSS)
  - Condensate and Feedwater System
  - Turbine Bypass System(TBS)
  - Circulating Water System(CWS)
  - Steam Generator Blowdown System(SGBDS)
  - Auxiliary Feedwater System(AFWS)

10.2 Turbine Generator

- Approach
- Turbine control and overspeed protection
- Turbine rotor design and integrity
- Turbine missile probability analysis
- COL items
- Open items

10.2 Turbine Generator – Approach

- **Turbine generator (T/G) does not perform any safety-related function**
- **Selection of a specific design by COL applicant**
  - Facilitates selecting optimum design for safety and reliability, considering latest regulatory and industry guidance and experience
  - Allows for competitive procurement
- **COL items ensure T/G system satisfactorily meets requirements**
  - COL items provide direction
- **Satisfactory T/G control system (TGCS), overspeed protection, turbine rotors, inspections, and supporting analyses specified in DCD as :**
  - Functional requirements and principles
  - Overarching architecture
  - Compliance with the extant regulatory guidance

10.2 Turbine Generator Valves

- **High pressure turbine has redundant in-series isolation valves**
  - Main stop valves (MSVs)
  - Control valves (CVs)
- **Low pressure turbines have redundant series isolation valves**
  - Intermediate stop valves (ISVs)
  - Intercept valves (IVs)
- **All valves shut by spring force when hydraulic control oil pressure relieved**
  - 0.3 second closure time required
- **Non-return valves prevent reverse flow from extraction piping and shut by spring force when air pressure relieved**
  - 1.0 second closure time required

10.2 TGCS & Overspeed Protection Schematic

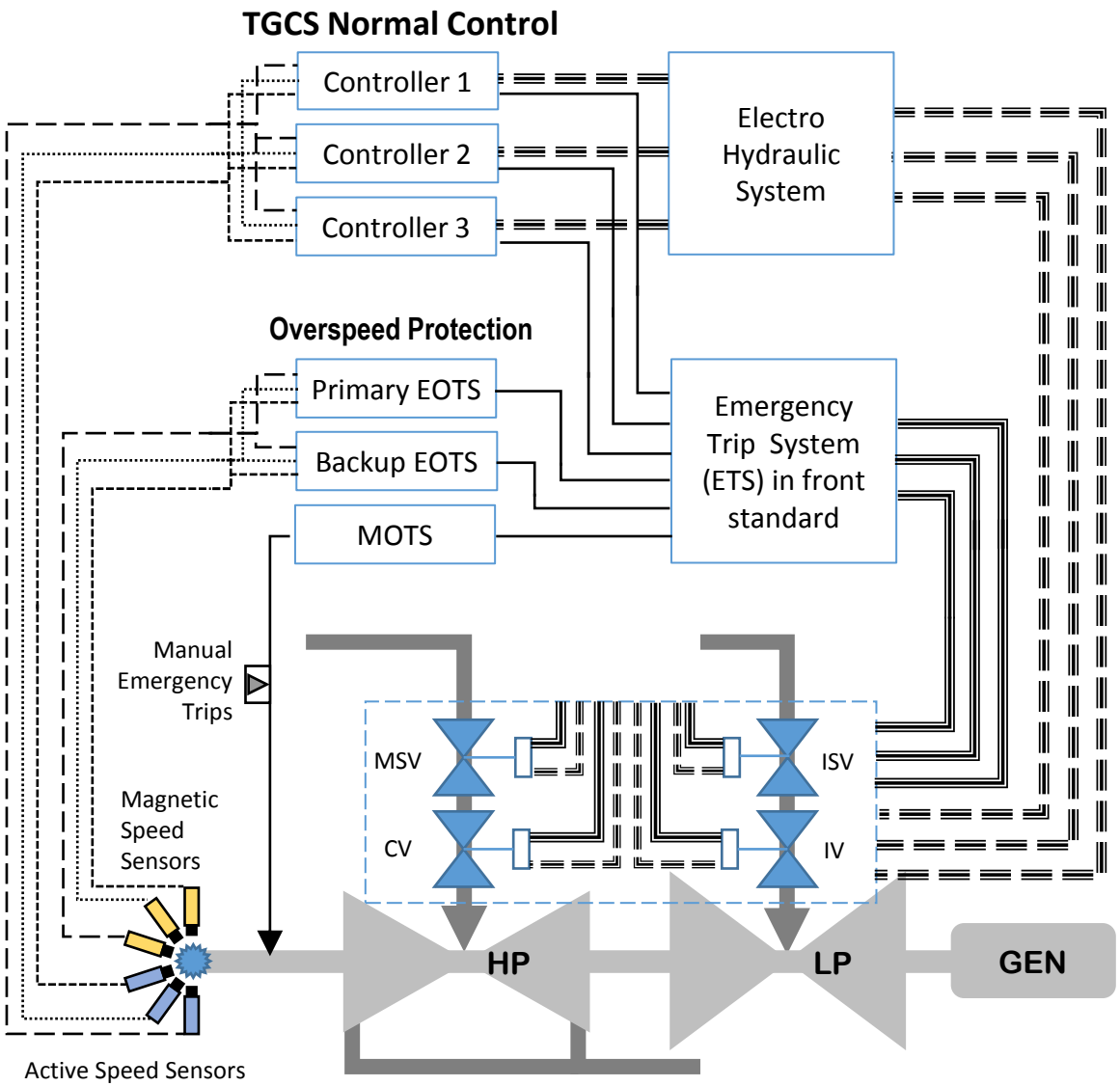

Signal Channels

Trip Signal Channels

Control Lines to each valve

ETS Lines to each valve

Steam Line

TGCS: Normal control system is first line of defense against overspeed by tripping solenoid-operated fast-acting valves, which drains hydraulic control oil from turbine steam valve dump valves.

EOTS: Electrical Overspeed Trip System de-energizes master trip valve solenoids, which drains hydraulic control oil from turbine steam valve dump valves via the ETS.

MOTS: Mechanical Overspeed Trip System consists of unbalanced ring that is activated by a centrifugal force against a spring when the turbine overspeeds, thus causing an eccentric movement that strikes the trip finger on the emergency trip valve, which drains hydraulic control oil from turbine steam valve dump valves via the ETS.

10.2 T/G Control & Normal Overspeed Protection

- **Control**
  - Automatic control of speed & acceleration
  - Automatic control of load & loading rate
  - Semi-automatic control of speed
  - Preset load limits based on operating conditions
  - Monitoring
  - Testing of valves and controls
- **Overspeed protection**
  - Valves are fully closed at 103% of rated speed
  - Uses three active speed sensors
  - Applies two of three voting in three control processors
    - Failure of two inputs causes trip

10.2 TG Overspeed Protection

Emergency trip system (ETS) has redundant, diverse means of T/G trip

- **Mechanical Overspeed Trip System (MOTS)**
  - Trips at ~110% full speed
  - Rotational acceleration actuates trip linkages
  - Emergency manual trip from front standard & control room
    - De-energizes solenoid to drain hydraulic control oil
- **Electrical Overspeed Trip System (EOTS)**
  - Trips at ~111.5% full speed by de-energizing master trip solenoids
  - Uses 3 passive magnetic sensors
  - Either of 2 speed calculating modules trip on 2 of 3 sensors
    - Primary module uses software logic
    - Backup module is independent and uses firmware

10.2 Control & Overspeed Protection Setpoints

Device	Function	Set point (% rated speed)
TGCS	Control of CVs	100
TGCS	MSVs, CVs, ISVs, and IVs close	103
MOTS	Trip ETS	110
EOTS	Trip ETS	111.5

Maximum expected overspeed is ~115% of rated speed.

10.2 Hydraulic Control Oil

- **Draining oil (relieving pressure) allows springs to shut turbine valves**
- **Failure of piping between trip block and valve actuators trips turbines**
- **Drain headers**
  - Sized to handle maximum hydraulic control oil flow requirements, maintaining required valve stroke times
  - In series valves (e.g., ISVs and IVs) drain to separate stainless steel headers then to common drain line and reservoir
- **Hydraulic fluid in TGCS and ETS is separate from lube oil to minimize potential for contamination**
- **Non-return valves held open by instrument air but close as non-actuated swing check valve**

10.2 Overspeed Protection Design Principles

- **Diversity**
  - MOTS mechanical vs. EOTS & TGCS electrical
  - EOTS & TGCS use different technology speed inputs
- **Separation**
  - ETS valves in front standard
  - EOTS & TGCS trips in different cabinets with own UPS
  - Hydraulic control headers from series steam valves
- **Redundancy**
  - Series valves in each steam inlet supply line
  - 2 out of 3 sensors trip TGCS
  - 2 out of 3 sensors trip EOTS
  - 3 different automatic trips plus manual

10.2 Overspeed Protection Design Principles

- **Independence**
  - TGCS, MOTS, EOTS sensors different
  - Failure of one overspeed trip system will not affect others
  - Failure of one valve to close will not affect others
- **Single Failure Criterion**
  - No single failure will cause turbine overspeed
  - No single failure will prevent overspeed trip

10.2 Overspeed Protection Design Principles

- **Fail Safe**
  - Loss of power causes turbine trip
  - Failed speed sensor removed from logic but 2 failed sensors initiate trip
- **Testability during operation**
  - Provisions to test any MSV, CV, IV, or ISV
  - Overspeed sensors, controllers, and trips fully testable
  - MOTS not testable during operation to maintain simplicity

10.2 Turbine Missile Probability Analysis

- **Performed on selected design**
  - Use as-built material properties
  - Evaluate actual TGCS and ETS design
- **Orientation is favorable but applying a $1x10^{-5}$ per year criterion**
- **Establishes**
  - **Acceptability of overspeed protection**
  - **Inservice testing & inspections (what and how often)**

10.2 T/G COL Information

- **10.2(1) – Identify turbine vendor and model**
- **10.2(2) – Identify how functional requirements of DCD 10.2 are met and provide detailed schematics**
- **10.2(3) – Describe how turbine missile probability analysis conforms with DCD Section 10.2.3.6**
- **10.2(4) – Specify turbine rotor material properties**
  - Identify any deviation from extant SRP 10.2.3

(Open Item) 10.02-1 – Diversity/Redundancy/Independence

- **Open Item (RAI No. 8050, Question 10.02-02), Date issued (7/27/2015); KHNP responded (10/27/2015)**
  - **Description of Issue**: Provide information on how overspeed trips are performed, and what components & subsystems are used in implementing these overspeed trip systems. In addition, describe how turbine steam inlet valves and associated hydraulic fluid systems and solenoid valves function in tripping the turbine.
  - **Resolution:** As discussed in the preceding slides, in lieu of turbine design being specified, functional requirements for the T/G system and its overspeed protection are identified. The draft SER notes COL item 10.2(2) specifies that such details be provided once a T/G design is selected. To address the staff's concern for more detail without an actual TG design available, additional information is being included such as the generic schematic shown earlier and discussion of diversity, redundancy, independence, etc. Examples of the functional requirements are:

Redundant, in-series turbine steam valves are on each line admitting steam to high and low pressure turbines. Closure of turbine steam valves is accomplished by draining hydraulic control oil holding dump valves closed, allowing springs to shut each steam valve. Electrical Overspeed Trip signals are processed by both a primary and backup unit to determine trip validity based on 2 of 3 voting. Either unit opens contacts to de-energize both solenoids of the master trip valve, which repositions due to spring force, draining control oil, which also allows a spring to reposition the relay trip valve, which drains hydraulic control oil from the separate CV/IV header.

(Open Item) 10.02-2 – Fail Safe / Single Failure

- **Open Item (RAI No. 8050, Question 10.02-04), Date issued (7/27/2015); KHNP responded (10/27/2015)**
  - **Description of Issue**: Provide adequate details of the turbine trip-block and its configuration. If the design used a single trip block, provide information on single failure criteria for turbine overspeed, and justification on how it satisfied requirements for redundancy and diversity.
  - **Resolution:** To address the staff's concern for more detail without an actual TG design available, additional information is being included such as discussion of required diversity, redundancy, etc. An example is given below:

Independence – A failure of one of the overspeed protection systems will not propagate to the others because they are electrically isolated and physically separated. Failure of the hydraulic piping between the trip block and the valve actuator, or between the hydraulic fluid tank and the valve actuator will cause a loss of fluid pressure, which closes the turbine steam valves.

Redundancy – i. Each turbine steam inlet line has two valves (e.g., MSV and CV for high pressure turbine), closure of any one in each pair isolates that line. ii. Failure of any one component in overspeed protection systems will not prevent a turbine trip.

Single failure criterion – single failures are addressed through redundancy and independence, but additionally: i. No single failure will cause a turbine to overspeed.

(Open Item) 10.02-3 – Common Cause / Mode Failure

- **Open Item (RAI No. 8050, Question 10.02-05), issued (7/27/2015); KHNP responded (10/27/2015)**
  - **Description of Issue**: Address electrical and fluid flow paths, shared components, failure modes, and CCF vulnerabilities and also provide a description on reliable operation of hydraulic/air systems as associated with preventing turbine overspeed conditions. Clearly indicate what parts are shared. For clarity, the response should include schematic diagrams that show the control fluid flow paths, piping and valves being actuated (i.e., turbine stop, control, reheat stop, intercept, and extraction non-return valves).
  - **Resolution:** As noted in response to the last two Open Items, more detail is being added to the functional requirements to address requirements for diversity, redundancy, etc. Other examples are:

Diversity – i. In conjunction with normal control and electrical overspeed trips, the purely mechanical overspeed trip does not depend on electric power (power is required to keep the mechanical trip solenoid valve energized to prevent manual trip). ii. TGCS & EOTS use diverse speed inputs, determine trip validity using different technology, have different set points, and actuate to drain control oil, to eliminate common cause failures from rendering trip functions inoperable. MOTS senses speed via physical repositioning of a weight, rather than sensing rotation rate.

Separation – Hydraulic control oil drain headers for MSVs and CVs and for ISVs and IVs are separate and separated on opposite sides of the turbines.

(Open Item) 10.02-4 – Manual Turbine Trip

- **Open Item (RAI No. 8050, Question 10.02-03), Date issued (7/27/2015); KHNP responded (10/27/2015)**
  - **Description of Issue**: Provide detailed information regarding a manual control and/or manual turbine trip system for the APR1400 T/G system. Include any hard wiring from the main control room (MCR) to the T/G unit, including a push button at the turbine pedestal.
  - **Resolution:** Although the detailed wiring diagram will not be available until the COL applicant selects a T/G design, the DCD contains the following information:
    - ✓ Emergency manual trip activation at the turbine front standard and from the MCR by de-energizing a solenoid that moves the trip linkages.
    - ✓ The manual emergency trip shall be designed such that no single failure (e.g., push button) will prevent a manual trip and that failure of the ETS to initiate an automatic trip does not prevent a successful manual trip. The physical implementation (e.g., hard wiring) shall be included in the schematic required by COL item 10.2(2). Hydraulic control oil drain headers for MSVs and CVs and for ISVs and IVs are separate and separated on opposite sides of the turbines.

10.3 Main Steam System

- The MSS extends from the SG nozzles up to the turbine stop valves and consists of safety-related valves and branch piping.
- Major components of the MSS are as follows:

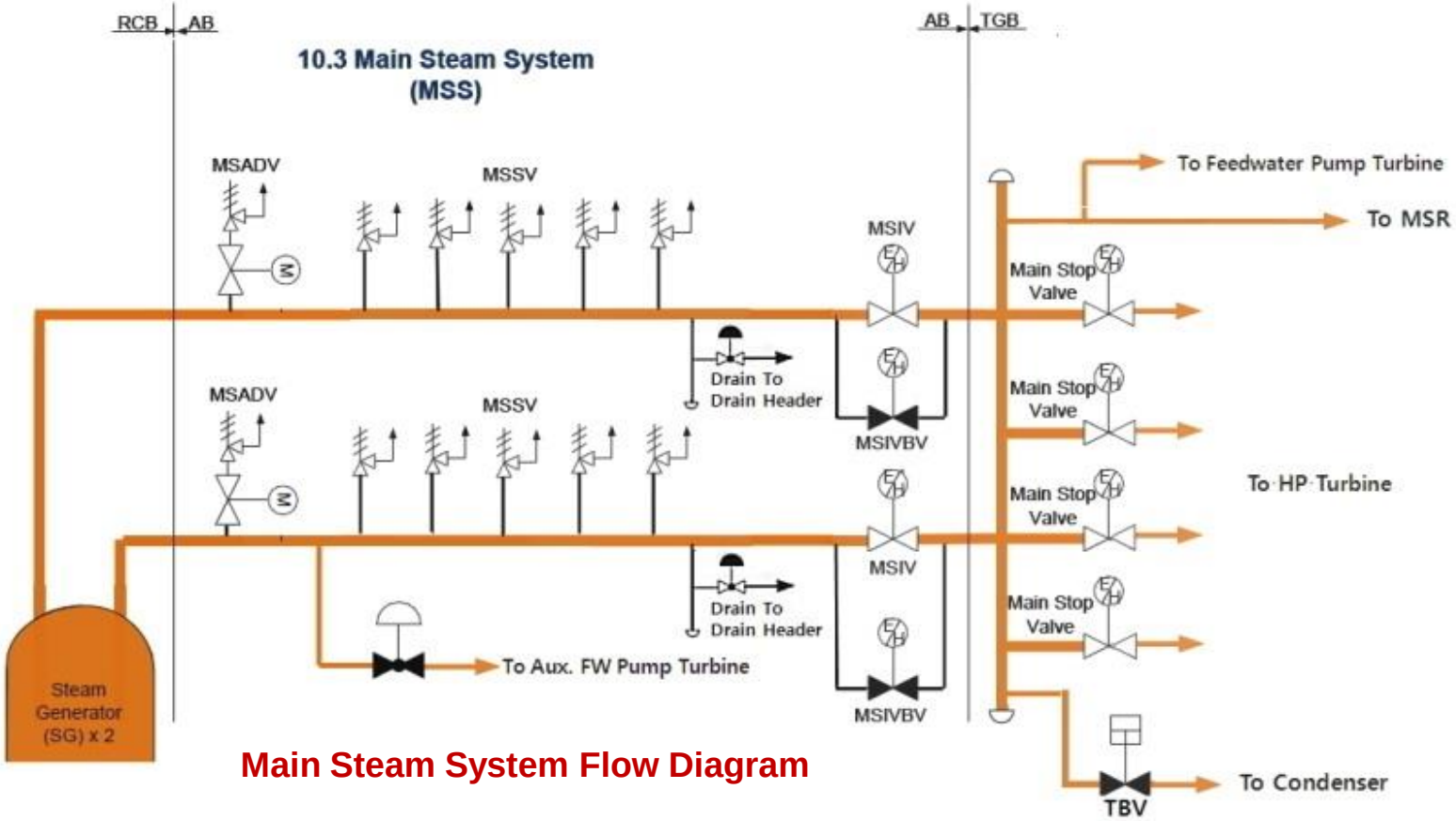

Main Steam System Flow Diagram

10.3 Main Steam System

- **The Main Steam System is designed to :**
  - Deliver steam from the SGs to the turbine-generator.
  - Dissipate heat when the main condenser is not available.
  - Provide steam to the feedwater pump turbines, auxiliary feedwater pump turbines, the second-stage reheater of the MSR, turbine steam seal system, and auxiliary steam system.
  - Provide adequate overpressure protection for the SGs and the MSS.
- **The Main Steam System is designed as following :**
  - The MSS piping in safety-related portion are designed in accordance with the requirements of ASME Section III, Class 2 and 3. The remaining steam piping is in accordance with ANSI/ASME-B31.1.
  - FAC-resistant materials are used for the FAC-susceptible piping.
  - The additional pipe thickness is applied for the carbon steel piping in consideration of the 40 years of design life.

10.3 Main Steam System

- **10.3 Main Steam System - Open Items (1/3)**
  - **Open Item 10.3-1 (RAI No. 8570, Question 10.03-5), Date issued (4/19/16); KHNP responded (6/23/16)**
    - **Description of Issue** : Provide a tabulation and descriptive text of all flowpaths that branch off the main steamlines between the MSIVs and turbine stop valves as specified by SRP 10.3, Section III.5.E.
    - **Resolution :** Provided the new table including information required in SRP 10.3, Section III.5.E.

10.3 Main Steam System

- **10.3 Main Steam System - Open Items (2/3)**
  - **Open Item 10.3-2 (RAI No. 8570, Question 10.03-4), Date issued (4/19/16); KHNP responded (6/29/16)**
    - **Description of Issue** : Provide how, with seismic category II classification, this section of piping can perform its safety-related function of discharging steam to the atmosphere during a seismic event.
    - **Resolution :** Described the validity of performing safety-related function of discharging steam to the atmosphere with seismic category II during a seismic event. Also, demonstrated the ability of the MSVH structures to adequately handle the discharged steam from MSADVs and MSSVs during the accident.

10.3 Main Steam System

- **10.3 Main Steam System - Open Items (3/3)**
  - **Open Item 10.3-3 (RAI No. 8575, Question 10.03-6), Date issued (4/19/16); KHNP responded (6/1/16)**
    - **Description of Issue** : List the items to be incorporated into operating and maintenance procedures consistent with NUREG-0927.
    - **Resolution :** Included the items to be incorporated into operating and maintenance procedures necessary to address water(steam) hammer specified in NUREG-0927 in DCD.

10.3 Key Review Item (FAC)

- **10.3.6 Steam and Feedwater System Materials – Open Items (1/5)**
  - **Open Item 10.3.6-1 (RAI No. 8649, Question 10.03.06-24, Date issued (05/24/16); KHNP responded (09/29/16)**
    - **Description of Issue** : The applicant references ASME Code, Section XI, but does not integrate the terms and conditions specified in 10 CFR 50.55a(b)(5) regarding RG 1.147 and conditions on the use of ASME Code Cases.
    - **Resolution :** The following sentence will be added to the end of COL item 10.3(3).

      "The program shall incorporate the conditions of 10 CFR 50.55a(b)(5) on ASME Code Case N-597-2".

10.3 Key Review Item (Open Item)

- **10.3.6 Steam and Feedwater System Materials – Open Items (2/5)**
  - **Open Item 10.3.6-2 (RAI No. 8649, Question 10.03.06-25, Date issued (05/24/16); KHNP responded (09/29/16)**
    - **Description of Issue** : Item COL 10.3(3) describes the implementation a FAC monitoring program. As written the COL item reduces the scope of the FAC program to systems which are predicted to be susceptible to FAC. The EPRI NSAC-202L program requires that all systems are added into the FAC program and allows lines to be excluded from inspections based upon certain criteria; COL item 10.3(3) prescreens systems from the NASC-202L program.
    - **Resolution :** The COL item 10.3(3) will be revised.

      "The COL applicant is to provide a description of the FAC monitoring program. The description is to address consistency with GL 89-08 and NSAC-202L-R3 and provide a milestone schedule for implementation of the program".

10.3 Key Review Item (Open Item)

- **10.3.6 Steam and Feedwater System Materials – Open Items (3/5)**
  - **Open Item 10.3.6-3 (RAI No. 8649, Question 10.03.06-26, Date issued (07/26/16); KHNP responded (09/29/16)**
    - **Description of Issue** : The staff noted a configuration of: chrome-molybdenum steel to carbon steel to chrome-molybdenum steel in the downcomer line. This configruation is more susceptible to FAC as discussed in NSAC-202L Revision 3.
    - **Resolution :**

      a. In OPR1000 design, chrome-moly steel is utilized between MFCV and MSVH line which contains sharp bending portions susceptible to FAC as shown in Figure 1. In the APR1400 design, carbon steel is utilized between MFCV and MSVH line which does not have sharp bending portions as shown in Figure 2. The 3D piping layout is presented in Figure 3 in line of between MFCV and MSVH comparing OPR1000 and APR1400 design.

10.3 Key Review Item (Open Item)

Figure 1

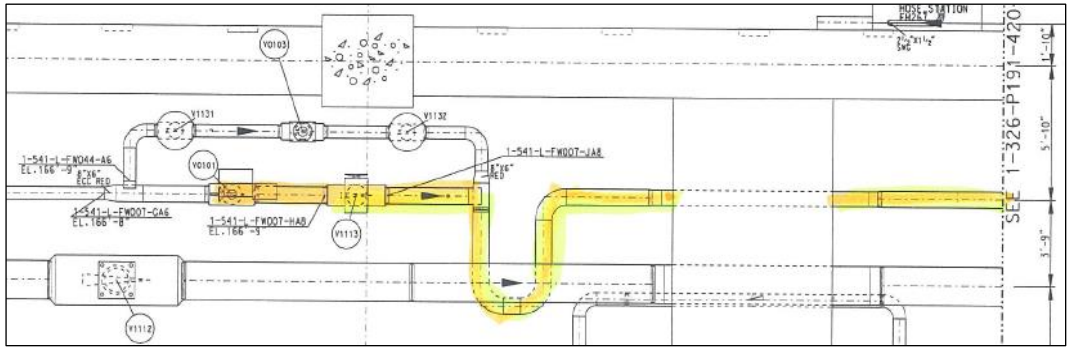

Figure 2

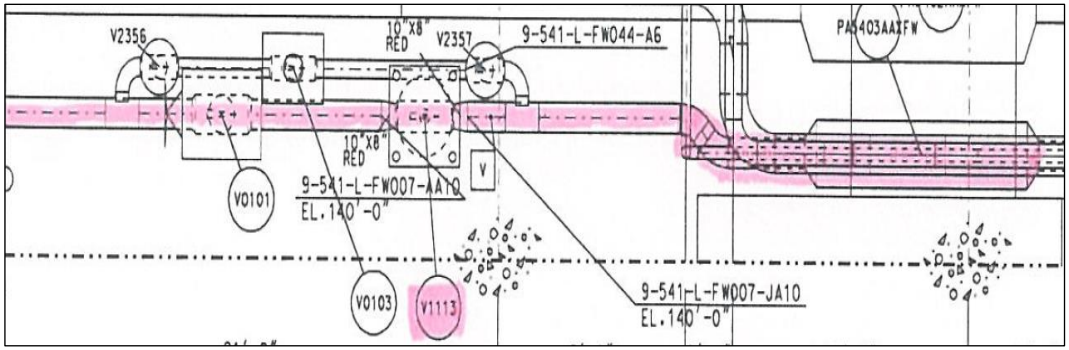

Figure 3

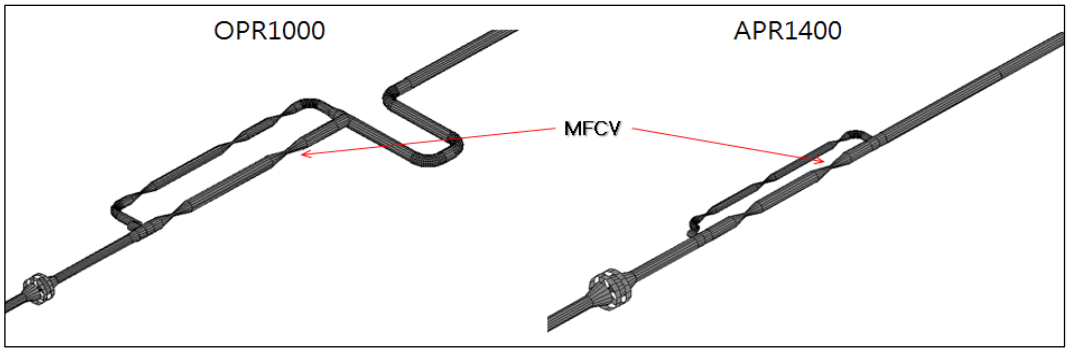

10.3 Key Review Item (Open Item)

Material comparison between OPR1000 & APR1400

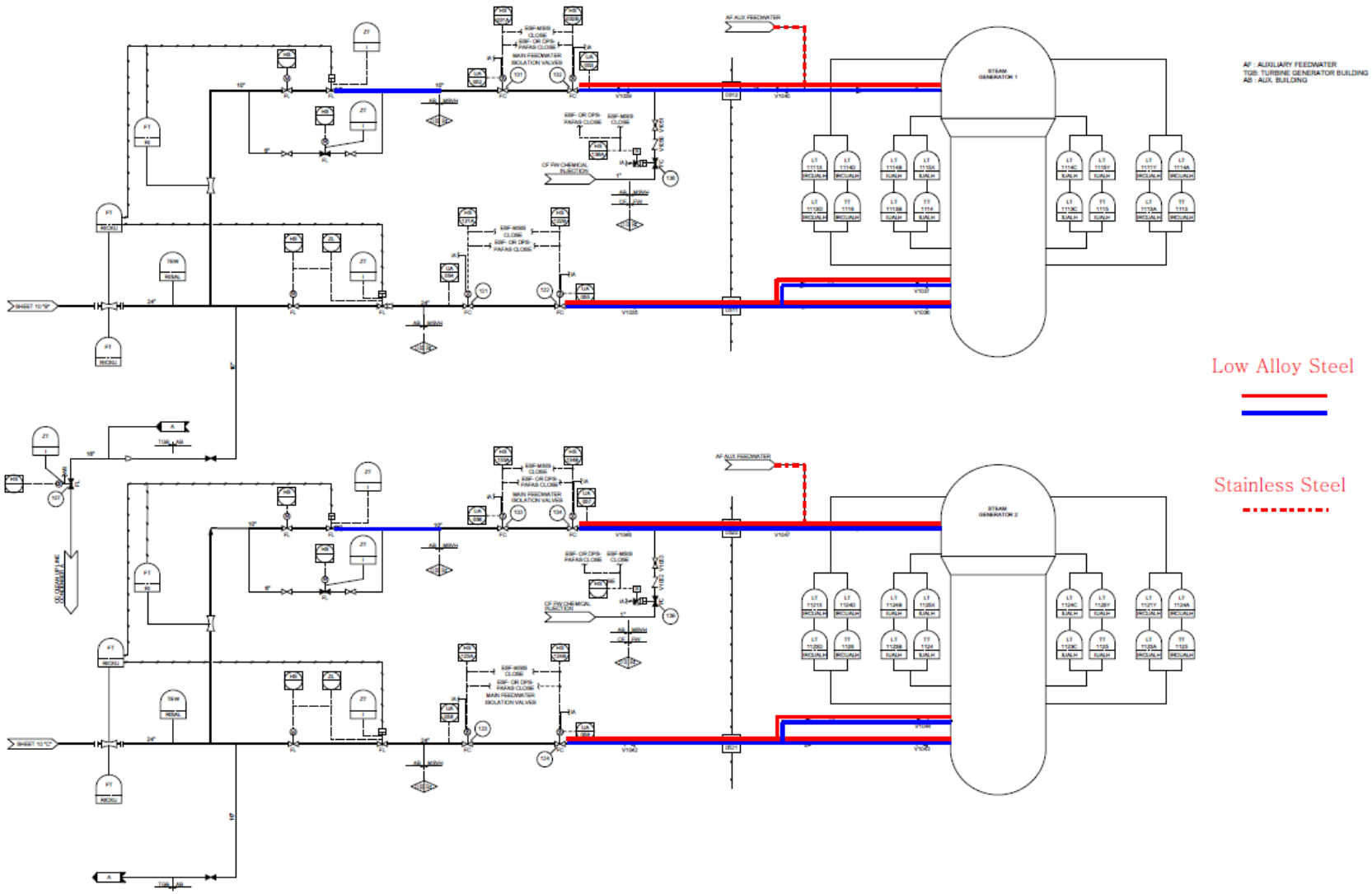

10.3 Key Review Item (Open Item)

- **10.3.6 Steam and Feedwater System Materials – Open Items (3/5)**
  - **Open Item 10,3,6-3 (RAI No. 8649, Question 10.03.06-26, Date issued (07/26/16); KHNP responded (09/29/16) - Continued**
    - **Resolution :**

b. The carbon steel portions of the downcommer feedwater line between the chrome-moly steel portions are not subject to augmented in-service inspection (ISI). ISI is performed to evaluate weld degradation on the area of weld.

UT thickness inspection is performed to evaluate component wear beyond the toe of the weld. Initial wall thickness is taken in components placed downstream of the MFCV and will be inspected periodically during plant operation. Figure 4 shows the UT inspection data implanted to CHECWORKS which has been taken prior to the pre-operation.

NON-PROPRIETARY

10.3 Key Review Item (Open Item)

Pre-service Measured Thickness for FAC Management

Figure 4

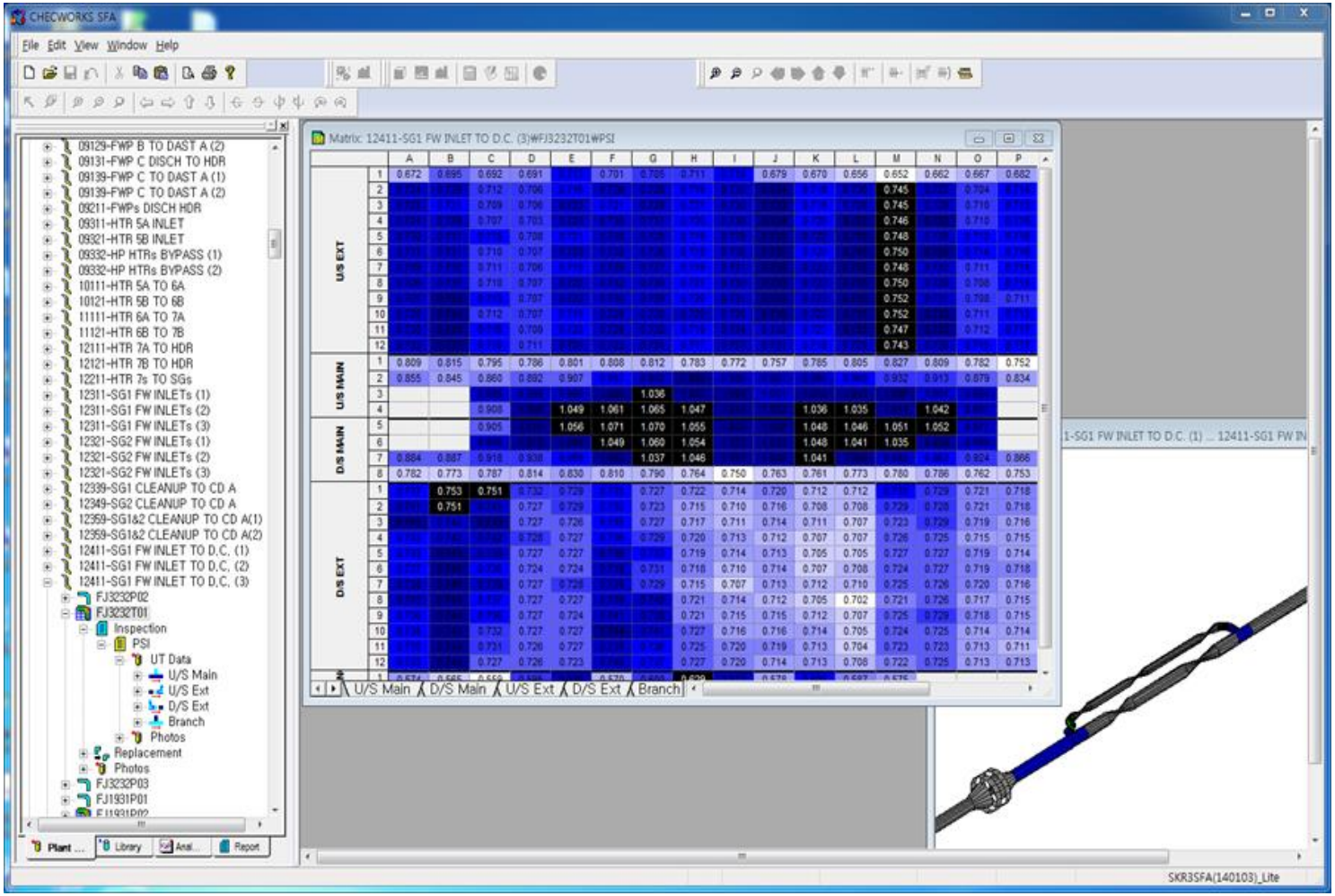

ACRS Meeting (Oct. 4 . 2016)

10.3 Key Review Item (Open Item)

- **10.3.6 Steam and Feedwater System Materials – Open Items (4/5)**
  - **Open Item 10.3.6-4 (RAI No. 8649, Question 10.03.06-27, Date issued (07/26/16); KHNP responded (09/29/16)**
    - **Description of Issue** : Requests further information on why the economizer line did not require a FAC resistant material considering that the flow is similar to the downcomer line.
    - **Resolution :** The answer can be referred to the Question 10.03.06-26.

      Both the downcomer and economizer lines are installed with carbon steel. Accordingly, the FAC susceptibility comparison is not necessary between the two lines.

      In addition, the FAC susceptible portions are periodically inspected based on a long term inspection plan between the economizer and the downcomer feedwater line.

10.3 Key Review Item (Open Item)

- **10.3.6 Steam and Feedwater System Materials – Open Items (5/5)**
  - **Open Item 10.3.6-5 (RAI No. 8671, Question 10.03.06-28, Date issued (08/12/16); KHNP responded (09/29/16)**
    - **Description of Issue**:

      1) If the removal of fittings, valves, and flanges from Tables 10.3.2-2, 10.3.2-3 and 10.3.2-4 is intended, provide a justification for the removal of these components from the tables and, as necessary, identify where the materials of construction for these components will be documented in the FSAR.

    - **Resolution**: FAC inspections are normally carried out using UT thickness measurements. For castings of valves and flanges it is often quite difficult to quantify wear as surfaces are non-parallel and thus UT thickness measurements are not used in this case.

      Visual inspections are more commonly used if wear is localized on valves and flanges. Therefore, material and size for valves and flanges have been excluded in Table 10.3.2-2, 10.3.2-3, and 10.3.2-4. The vendor design portions has been also excluded in Table 10.3.2-2, 10.3.2-3, and 10.3.2-4, which are irrelevant to FSAR 10.3.6.

10.3 Key Review Item (Open Item)

- **10.3.6 Steam and Feedwater System Materials – Open Items (5/5)**
  - **Open Item 10.3.6-5 (RAI No. 8671, Question 10.03.06-28, Date issued (08/12/16); KHNP responded (09/29/16) - Continued**
    - **Description of Issue**:

      2) Provide an explanation for the proposed changes in pipe sizes documented in applicant's RAI 314-8378 response dated January 11, 2016.

      If the changes were intentional, identify other parts of the DCD, including P&IDs, transient analyses, and other impacted sections of the FSAR, which require corresponding changes and provide proposed corresponding changes. If the changes were not intentional, revise Tables 10.3.2-3 and 10.3.2-4 with the correct information (which may be to restore the information which was originally included in the tables).

10.3 Key Review Item (Open Item)

- **10.3.6 Steam and Feedwater System Materials – Open Items (5/5)**
  - **Open Item 10.3.6-5 (RAI No. 8671, Question 10.03.06-28, Date issued (08/12/16); KHNP responded (09/29/16) – Continued**
    - **Resolution**: Table 10.3.2-2, Table 10.3.2-3, and Table 10.3.2-4 have been reviewed with consideration to the changes. Indeed, there is no impact on to the other documents.
      - ✓ There was some confusion in the response to RAI 314-8378 dated January 11, 2016. Thus, Table 10.3.2.3 and Table 10.3.2.4 (1 of 2) have been revised.
      - ✓ Table 10.3.2-4 (1 of 2) will be revised. 26 inches and 30 inches will be added.

10.3 Key Review Item (Open Item)

RAI 514-8671 - Question 10.03.06-28

Attachment (3/3)

RAI 314-8378_Question 10.03.06-3

RAI 452-8545_Question 10.03.06-20

RAI 514-8671_Question 10.03.06-28

C

Table 10.3.2-4 (1 of 2)

Feedwater Piping Design Data

Segment	Material Specification	NPS	DN	Outside Diameter (in)	Remark	ASME Class
Feedwater pump to feedwater pump discharge header	A-106 Gr.B (seamless)	24	600	24.000	-	B31.1
Feedwater pump discharge header	A-672 Gr.B60 (welded)	30	750	30.000	-	B31.1
Feedwater pump discharge header to Feedwater heaters 5/6/7	A-672 Gr.B60 (welded)	26 32	650 800	26.000 32.000	-	B31.1
Feedwater heaters 7 to Feedwater heaters 7 outlet header	A-672 Gr.B60 (welded)	26	650	26.000	-	B31.1
Feedwater heaters 7 outlet header	A-672 Gr.B60 (welded)	32	800	32.000	-	B31.1
Fittings	A-234 WPB A-234 WPC	24 32	600 800	24.000 32.000	-	B31.1
Feedwater heaters 7 outlet header to **MSVH**	A-106 Gr.B (seamless, welded)	10 24	250 600	10.750 24.000	-	B31.1
Fittings	A-234 WPB	10 24	250 600	10.750 24.000		B31.1

Replace with "A"

"A"

24	600	24.000
26	650	26.000
30	750	30.000
34	800	32.000

10.4 Other Features

- **10.4.8 Steam Generator Blowdown System**
  - Performs no safety-related function except the containment isolation capability and steam generator shell side pressure boundary.
  - Assists in maintaining the chemical characteristics of the secondary side water within permissible limits during normal operation and Anticipated Operational Occurrences(AOOs) such as a main condenser tube leak or SG primary-to-secondary tube leakage.
  - Consists of two subsystems, the Blowdown Subsystem(BDS) and Wet Lay-up Subsystem(WLS).

10.4 Other Features

- **10.4.8 Steam Generator Blowdown System (cont.)**
  - The BDS removes impurities concentrated in SGs by Continuous Blowdown (CBD) and periodical High-Capacity Blowdown(HCBD).
  - In addition, an Emergency Blowdown(EBD) can be operated to reduce the SG water level during a Multiple Steam Generator Tube Rupture(MSGTR) event.
  - The WLS maintains the steam generator water chemistry within the specified ranges during shutdown operation.

10.4 Other Features

- **10.4.8 Steam Generator Blowdown System – Open Item (1/1)**
  - **Open Item 10.4.8-1 (RAI No. 8596, Question 10.04.08-6), Date issued (5/4/16); KHNP responded (8/8/16)**
    - **Description of Issue** : Address the missing actuation signals (High Radiation Actuation Signal(HRAS) and Blowdown Flash Tank High-High Level Actuation Signal (BFTHHLAS) in DCD Figure 2.7.1.8-1 and to provide additional detail in DCD chapter 7 for consistency and clarity.
    - **Resolution :** Indicated the actuation signals (HRAS and BFTHHLAS) in DCD Figure 2.7.1.8-1 and provided the detailed description in DCD chapter 7 subsection 7.3.1.9.

10.4 Other Features

● 10.4.9 Auxiliary Feedwater System

➢ Provides the auxiliary feedwater to the intact SG(s) until the shutdown cooling system entry condition when the main feedwater system is inoperable for the following events:

- Loss of normal feedwater
- Main Steam / Feedwater Line Break
- Steam Generator Tube Rupture
- Transient conditions or postulated accidents such as reactor trip
- Any incident that results in Station Blackout
- Small-Break Loss-Of-Coolant Accident
- Anticipated Transients Without Scram

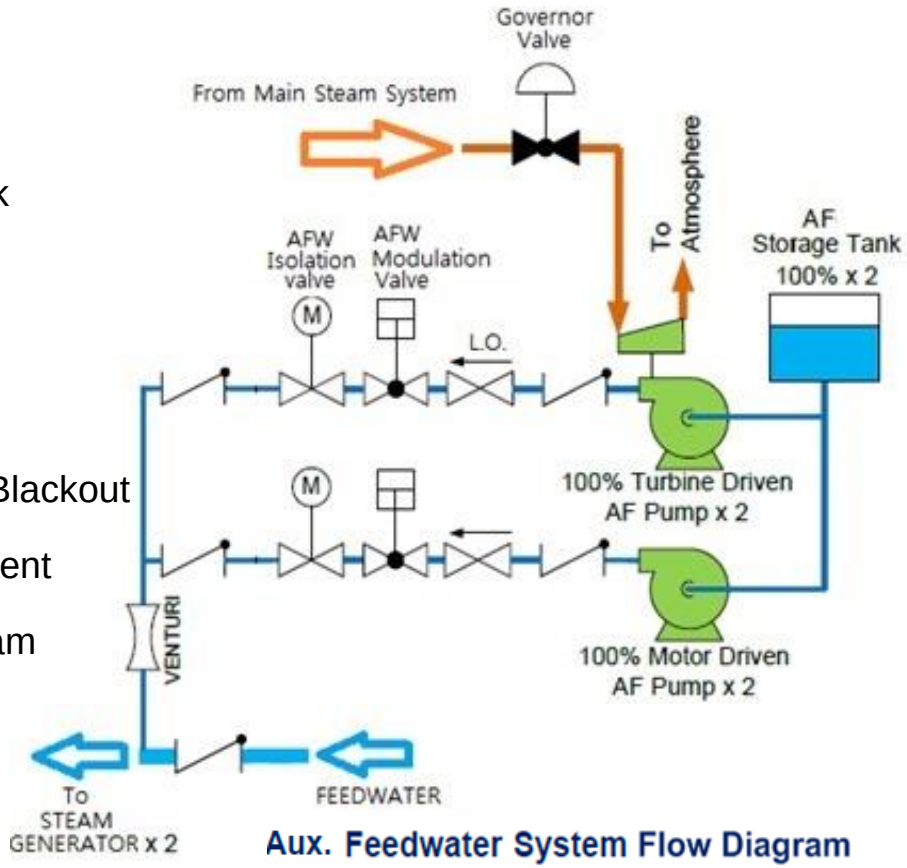

Aux. Feedwater System Flow Diagram

10.4 Other Features

- **10.4.9 Auxiliary Feedwater System (cont.)**
  - The Auxiliary Feedwater System(AFWS) and supporting systems are designed to provide the required flow to the SG(s) with a Loss Of Offsite Power(LOOP) event, assuming a single active failure.
  - The AFWS components are located in the auxiliary building, which is designed as seismic Category I.
  - All mechanical components and piping up to the AFW isolation valves are safety Class 3 and designed to ASME Section III requirements.
  - All components and piping from and including the containment isolation valves to the SGs are safety Class 2 and designed to ASME Section III requirements.

10.4 Other Features

- **10.4.9 Auxiliary Feedwater System (cont.)**
  - The safety-related portions of the AFWS are appropriately protected against the possible effects of postulated high- or moderate-energy pipe failure including pipe whip or jet impingement.
  - A failure of a non-essential equipment or component does not affect the AFWS safety functions.

10.4 Other Features

- **10.4.9 Auxiliary Feedwater System – Open Item (1/1)**
  - **Open Item 10.4.9-1 (RAI No. 8664, Question 10.4.9-7, Date issued (No information);**

    KHNP responded (After receipt of RAI)
    - **Description of Issue** : Provide the description of the AFWS reliability analysis to be performed in accordance with TMI action item II.E.1.1 of NUREG-0737.
    - **Resolution :** The results of AFWS reliability analysis have already been provided in the response of RAI 86-8003. The description of the performed AFWS reliability analysis will be made available to the staff.

10.4 Other Features

- **10.4.10 Auxiliary Steam System – Open Items (1/2)**
  - **Open Item 10.4.10-1 (RAI No. 8556, Question 10.4.10-1, Date issued (04/28/16);**

    KHNP responded (06/16/16)
    - **Description of Issue** : State clearly which option they chose to meet 10 CFR 20.1406 regarding embedded and buried piping
    - **Resolution :** Piping embedment and buried piping in the yard shall be minimized to the extent practicable by using concrete tunnels. Where embedded and buried piping cannot be avoided, consideration shall be given to minimize embedded piping lengths and to utilize double-walled piping with leak detection capabilities on the outer piping.

      The response to RAI will be revised as shown above.

10.4 Other Features

- **10.4.10 Auxiliary Steam System – Open Items (2/2)**
  - **Open Item 10.4.10-2 (RAI No. 8556, Question 10.4.10-2, Date issued (04/28/16);**

    KHNP responded (06/16/16)
    - **Description of Issue** : Requests the applicant to clarify the actual seismic and quality group classifications of the auxiliary steam system components and piping within the reactor containment building. The applicant is requested to modify the DCD Figure 10.4.10-1 and Table 3.2-1 to clearly depict a consistent design
    - **Resolution :** Containment isolation valves and associated piping are seismic category I and quality group B. The piping and valves downstream of the containment isolation valve within the reactor containment building are non-safety related, seismic category II and quality group D.

10.4 Other Features

- **10.4.11 Combined License Information - Open Item (1/1)**
  - **Open Item 10.4-3 (RAI No. 246-8307, Question 09.02.08-3), Date issued (10/14/15); KHNP responded (06/29/16)**
    - **Description of Issue** : The staff noted inconsistencies among the Chapter 9 and Chapter 10 in providing operational procedures and maintenance programs to satisfy 10 CFR 20.1406. The staff for Chapter 11 and 12 has decided to take on this issue and asked the applicant to remove all COL items.
    - **Resolution :** KHNP had considered the removal of all COL items related to 10 CFR 20.1406 in Chapters 9 and 10. During a teleconference between KHNP and the NRC staff, it was agreed upon to keep the current COL items as is. The resolution to this issue was submitted in the revised response to RAI No. 246-8307, Question 09.02.08-3.

Summary

- Chapter 10 provides information concerning the plant steam and power conversion system.
- The turbine generator control system (TGCS), overspeed protection, turbine rotors, inspections, and supporting analyses specified in the DCD as functional requirements, principles and overarching architecture are compliant with the latest and extent regulatory guidance and industry experience.
- The steam and power conversion system removes energy from the RCS via the steam generators and converts it to electric power in the turbine-generator.
- It provides safety-related heat removal via the auxiliary feedwater system and the main steam atmospheric dump.

ACRONYMS

- CW – Circulating Water
- CDI – Conceptual Design Information
- CV – Control Valve
- EOTS – Electrical Overspeed Trip System
- ETS – Emergency Trip System
- FAC – Flow Accelerated Corrosion
- FATT – Fracture Appearance Transition Temperature
- ISV – Intermediate Stop Valve
- IV – Intercept Valve
- MOTS – Mechanical Overspeed Trip System
- MSADV – Main Steam Atmospheric Dump Valve
- MSIV – Main Steam Isolation Valve
- MSIVBV – Main Steam Isolation Valve Bypass Valve
- MSR – Moisture Separator Reheater
- MSSV – Main Steam Safety Valve
- MSV – Main Stop Valve
- MSVH – Main Steam Valve House
- POSRV – Pilot Operated Safety Relief Valve
- PTP – Point To Point
- RCS – Reactor Coolant System
- SSC – Structure, System or Component
- TGCS – Turbine Generator Control System
- WTM – Wall Thinning Management

United States Nuclear Regulatory Commission

Protecting People and the Environment

Presentation to the ACRS Subcommittee

Korea Hydro Nuclear Power Co., Ltd (KHNP)
APR1400 Design Certification Application Review

Safety Evaluation with Open Items: Chapter 10

STEAM AND POWER CONVERSION SYSTEM

OCTOBER 4, 2016

- **Technical Staff Presenters**
  - Angelo Stubbs – DCD Sections 10.2, 10.4.9 &10.4.10
  - Ryan Nolan – DCD Section 10.3
  - Andrew Yeshnik – DCD Section 10.3.6
  - Greg Makar – DCD Section 10.4.8

- **Project Managers**
  - Jeff Ciocco – Lead Project Manager
  - George Wunder – Chapter 10 Project Manager

Staff Review Team

U.S.NRC
United States Nuclear Regulatory Commission
Protecting People and the Environment

- **Angelo Stubbs**
  Plant Systems Branch
- **Ryan Nolan**
  Plant Systems Branch
- **Dennis Andrukat**
  Plant Systems Branch
- **Bob Vettori**
  Plant Systems Branch
- **Greg Makar**
  Materials and Chemical Engineering Branch
- **Andrew Yeshnik**
  Materials and Chemical Engineering Branch
- **John Honcharik**
  Materials and Chemical Engineering Branch
- **Eduardo Sastre-Fuente**
  Materials and Chemical Engineering Branch
- **Deanna Zhang**
  Instrumentation and Controls Branch
- **Kenneth Mott**
  Instrumentation and Controls Branch

Technical Topics
Section 10.2 – Turbine Generator

United States Nuclear Regulatory Commission
Protecting People and the Environment

Technical Topics

- Turbine Generator Control and Overspeed Protection
  - Three Independent Systems Used
    - Turbine generator control system
    - Mechanical overspeed trip system
    - Electrical overspeed trip system
  - Proposed use of a combination of mechanical and electrical overspeed protection systems provide diverse and redundant turbine generator overspeed protection.
  - COL Item 10.2(2) states the COL applicant is to identify how the functional requirements of the overspeed protection system are met and provide a schematic of the turbine generator control system from sensors through valve actuators.

Technical Topics
Section 10.2 – Turbine Generator

United States Nuclear Regulatory Commission
Protecting People and the Environment

Open Items

- **RAI 8050, Question 10.02-2** – Requested that the applicant describe how the overspeed protection system conforms to SRP guidance with respect to satisfying the single-failure criteria and relevant redundancy and independency considerations. Information requested included electrical schematics and logic diagrams of the T/G control and overspeed protection system and detailed functional performance description of the control fluid systems in conjunction with schematics.
  - **Status :** In response to question 10.02-2, the applicant indicated that the requested information would be provided by the COL applicant when they address COL Item 10.2(2). The staff found the information in the DCD was insufficient to support statements in the DCD regarding functional design capabilities. The staff held public meetings with KHNP on turbine overspeed control. In response to the staff's concerns about information available on the turbine generator overspeed system design and operation, the applicant has made new information available in the electronic reading room (ERR). Such additional information includes a schematic drawing of the overspeed protection system architecture to be used and discussions on how diversity, redundancy, and independence, is to be included in the T/G control and overspeed protection system design. The staff is awaiting formal submittal of the information, after which the staff will complete its evaluation.

Technical Topics
Section 10.2 – Turbine Generator

United States Nuclear Regulatory Commission
Protecting People and the Environment

Open Items

- **RAI 8050, Question 10.02-3** – Requested that the applicant provide detailed information on a manual control and/or manual trip system for the APR1400 T/G system.
  - **Status:** In response to question 10.02-3, the applicant has provided additional information on the manual control and manual trip system. A revision to COL Item 10.2(2) will be made identifying specific functional design requirements and the inclusion of schematic in COL applications. The staff is awaiting formal submittal of the information, after which the staff will complete its evaluation.
- **RAI 8050, Question 10.02-4** – Requested that the applicant provide adequate information on turbine trip-block and its configuration.
  - **Status**: In response to question 10.02-4, the applicant has provided additional information on the functional requirements identified to address turbine trip-block. The staff is awaiting formal submittal of the information, after which the staff will complete its evaluation.
- **RAI 8050, Question 10.02-5** – Requested that the applicant address the details of the air/hydraulic systems as they relate to turbine overspeed systems.
  - **Status**: In response to question 10.02-5, the applicant has provided additional information on the functional requirements identified to address diversity and redundancy design. The staff is awaiting formal submittal of the information, after which the staff will complete its evaluation.

Technical Topics
Section 10.3 – Main Steam System

United States Nuclear Regulatory Commission
Protecting People and the Environment

Open Items

- **RAI 8570, Question 10.03-4** – Requested the applicant to explain how the discharge piping of the MSADVs and MSSVs can perform their safety-related function of discharging steam to the atmosphere during a seismic event when its seismic classification is only seismic Category II.
  - **Status:** The response was received on 6/29/2016. The staff is still evaluating the response and whether seismic Category II is the appropriate classification for this section of piping because, by definition, seismic Category II is not safety-related.
- **RAI 8570, Question 10.03-5** – Requested the applicant for a description of all flowpaths that branch off the main steamline between the MSIVs and TSVs as specified in SRP 10.3, Section III.5.E.
  - **Status:** The response was received on 6/23/16. The response is still under staff evaluation.
- **RAI 8575, Question 10.03-6** – Requested the applicant to revise the DCD to include items to be incorporated into procedures necessary to address precautions associated with potential water/steam hammer consistent with NUREG-0927.
  - **Status:** The response was received on 6/1/2016. The response was found acceptable because the DCD will be revised to include elements to be incorporated into procedures to prevent water/steam hammer. This question is considered closed/resolved.

Technical Topics
Section 10.3.6 – Steam and Feedwater System Materials

United States Nuclear Regulatory Commission
Protecting People and the Environment

Open Item

- **RAI 8649 Question 10.03.06-24, DCD Supplement** - The FAC program for the APR1400 uses ASME Code Case N-597-2. Code Case N-597-2 is conditionally approved by the staff in RG 1.147 Rev 17. The staff requests that COL item COL 10.3(3) be revised to add a statement requiring compliance with the staff conditions.
  - **Status:** The applicant has submitted a RAI response which the staff finds acceptable. This item will be closed pending a DCD update.

- **RAI 8649 Question 10.03.06-25, DCD Revision:** COL Item COL 10.3(3) inappropriately narrows the scope of the FAC program by prescreening systems out of the FAC program.
  - **Status:** The applicant has submitted a RAI response that requires all feedwater and steam system lines will be included in the FAC program. This item will be closed pending a DCD update.

- **RAI 8649 Question 10.03.06-26** – The carbon steel main steam valve housing in the downcommer line may be more susceptible to FAC than other carbon steel portions of the feedwater system. The staff has requested a discussion on how the main steam valve housing is designed to accommodate the FAC conditions.
  - **Status:** The question is currently waiting a response

Technical Topics
Section 10.3.6 – Steam and Feedwater System Materials

United States Nuclear Regulatory Commission
Protecting People and the Environment

Open Item

- **RAI 8649 Question 10.03.06-27** – The staff has requested a discussion on why the downcommer line uses austenitic stainless steel for FAC prevention but the economizer line does not.
  - **Status:** The question is currently waiting a response

- **RAI 8671 Question 10.03.06-28** – The applicant's response to RAI 8545 Question 10.03.06-20 was incomplete. The applicant has not provided a rationale for changes to the piping diameters or removal of fittings, valves, and flanges. The staff requested an explanation on the changes and how the changes impact the design of the plant and impact the applicant's evaluations.
  - **Status:** The question is currently waiting a response

Technical Topics
Section 10.4.8 – Steam Generator Blowdown System

United States Nuclear Regulatory Commission
Protecting People and the Environment

Open Item

RAI 475-8596, Question 10.04.08-6 – The staff requested information about control signals that activate the containment isolation valves (CIVs) in the SGBS. (Follow-up to Question 10.04.08-1). This information is needed to determine if the design of the SGBS meets GDC 13 as it relates to monitoring system variables and isolating containment.

- Revise Tier 1 Figure 2.7.1.8-1 to identify two additional control signals that activate CIVs in the SGBS. The applicant had proposed adding these control signals to the corresponding Tier 1 table but not to the figure. The two signals are:
  - High Radiation Activation Signal (HRAS)
  - Blowdown Flash Tank High-High Level Actuation Signal (BFTHHLAS)
- Provide a description in DCD Chapter 7 of the specific signals that activate the CIVs rather than a general description of instrumentation and control signals.

Status: The applicant provided a response on August 8, 2016 with the information requested. However, based on discussion with the staff on September 27, 2016, the applicant is revising the response to make editorial corrections.

Technical Topics
Section 10.4.9 – Auxiliary Feedwater System

United States Nuclear Regulatory Commission
Protecting People and the Environment

Technical Topics

- System Design
  - Two 100 percent capacity motor-driven pumps
  - Two 100 percent capacity turbine-driven pumps
  - Two 100 percent capacity Auxiliary Feedwater Storage Tanks.
  - Total safety-related water inventory 800,000 gallons

Open Items

- **RAI 8664, Question 10.04.09-7** – Requested that the applicant provide detailed description of the AFWS reliability analysis that was performed to support DCD Tier 2, Section 10.4.9.1.2 (Item O), and clarify how the information demonstrates compliance with the AFWS unavailability target.
  - **Status:** Working internally and with the applicant to resolve the issue.

Technical Topics
Section 10.4.10 – Auxiliary Steam System

United States Nuclear Regulatory Commission
Protecting People and the Environment

Open Items

- **RAI 8556, Question 10.4.10-2** – Requested the applicant to clarify the actual seismic and quality group classifications of the auxiliary steam system components and piping within the reactor containment building.
  - **Status:** The response was received on 6/16/2016. The response stated that the nonsafety-related piping and components within the reactor containment building will be classified as seismic category II and quality group D. A DCD mark-up was provided. Staff has reviewed and finds the response acceptable. This question is now considered a confirmatory item.
- **RAI 8556, Question 10.4.10-1** – Requested the applicant clarify inconsistencies in the DCD regarding how they meet 10 CFR 20.1406. Specifically, whether there is no buried piping or buried piping will be minimized.
  - **Status:** The response was received on 6/16/16. The response stated that the auxiliary steam system will be designed with minimum embedded or buried piping and yard piping will be routed in an underground concrete tunnel that is designed with leakage collection and detection to minimize unintended contamination. DCD mark-up was provided. Staff has reviewed and finds the response acceptable. This question is now considered a confirmatory item.

Technical Topics
Section 10.4.10 – Auxiliary Steam System

United States Nuclear Regulatory Commission
Protecting People and the Environment

Open Items

- **OPEN ITEM 10.4-3** – Chapter 10 COL information items were inconsistent regarding operational procedures and maintenance programs with leak detection and contamination control requirements to satisfy 10 CFR 20.1406. In addition, the COL Information Item 10.4(1), as a standalone statement, does not identify which plant systems under DCD Tier 2, Section 10.4, are applicable.
  - **Status:** These COL Information Items address the programmatic aspects of 10 CFR 20.1406, which fall under the review scope of Chapters 11 and 12. NRC staff reviewers are working with Chapter 11 and 12 reviewers on this issue. Chapters 11 and 12 have been revised to ensure the proper programmatic aspects are covered for each affected plant system. However, the related COL Information Items in Chapter 10 were left unchanged. The staff is still evaluating what changes should be made to these Chapter 10 COL Information Items, if any. This question is considered open.

NON-PROPRIETARY

APR1400 DCA
Chapter 11: Radioactive Waste Management

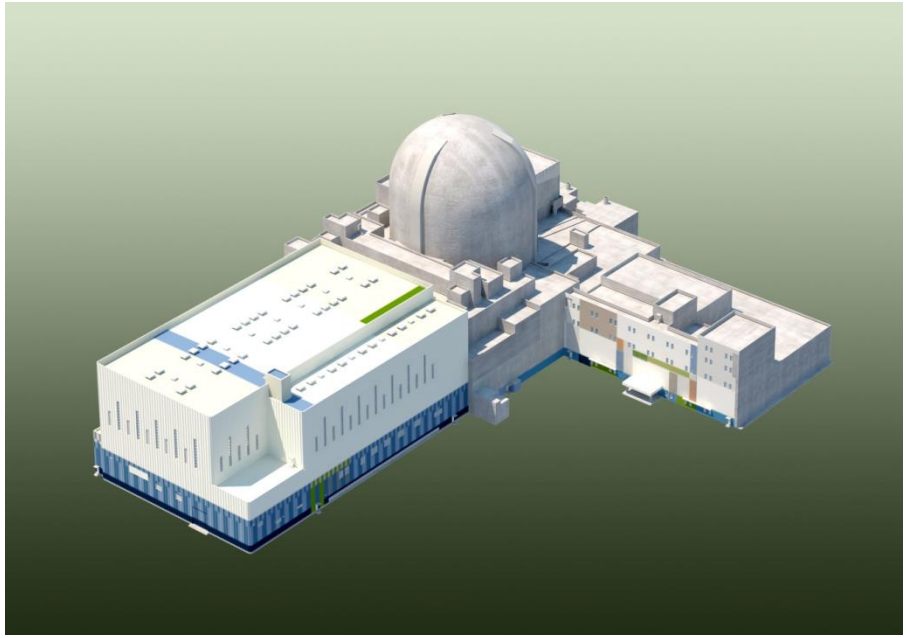

KEPCO/KHNP

Oct. 4, 2016

ACRS Meeting (Oct.4 , 2016)

Contents

Overview of Chapter 11

1 11.1 Source Terms

2 11.2-11.4 Radwaste Management Systems

3 11.5 Process & Effluent Rad. Monitoring System

4 11.2-11.4 Design Evaluation

5 Open Item & Summary

6 Acronyms

Overview of Chapter 11

❑ List of Submitted Documents

Document No.	Title	Revision	Type	ADAMS Accession No.
APR1400-K-X-FS-14002 -P & NP	APR1400 Design Control Document Tier 2: Chapter 11 Radioactive Waste Management	0	DCD	ML15006A044
APR1400-K-X-IT-14001 -P & NP	APR1400 Design Control Document Tier 1	0	DCD	ML15006A039

❑ RAI Summary

No. of Questions	No. of Responses	Not Responded*	No. of OI
34	30	4	5

* The responses to RAIs for the Radiation Monitoring System will be submitted by the end of 2016

Overview of Chapter 11

❑ Section Overview

Section	Major contents	Presenters
11.1	**Source Terms**	Sangho Kang
11.2	**Liquid Waste Management System**	Sangho Kang
11.2.1	Design Bases	
11.2.2	System Description	
11.2.3	Radioactive Effluent Releases	
11.2.4	Testing and Inspection Requirements	
11.3	**Gaseous Waste Management System**	Sangho Kang
11.3.1	Design Bases	
11.3.2	System Description	
11.3.3	Radioactive Effluent Releases	
11.3.4	Testing and Inspection Requirements	
11.4	**Solid Waste Management System**	Sangho Kang
11.4.1	Design Bases	
11.4.2	System Description	
11.4.3	Radioactive Effluent Releases	
11.4.7	Testing and Inspection Requirements	
11.5	**Process and Effluent Radiation Monitoring and Sampling Systems**	James S. Jhun
11.5.1	Design Bases	
11.5.2	System Description	
11.5.3	Effluent Monitoring and Sampling	
11.5.4	Process Monitoring and Sampling	

1. Source Terms (11.1)

1.1 RCS and CVCS

1.2 BOP and Radwaste Systems

1.1 RCS and CVCS

Design Basis Source Terms

- Design basis source term is used for the design of radioactive waste management system and for determining design lifetime integrated doses for the equipment qualification
- 1% fuel defect is assumed based on SRP 11.2 and 11.3
- Mass balanced differential equations described in DCD were used to calculate the activity of each nuclide
- RCS coolant maximum activity is calculated using DAMSAM code
- Activity for CVCS components are calculated using SHIELD-APR code based on maximum RCS specific activity

Expected Source Terms

- Expected source term is used for estimation of the annual effluent releases to the environment
- Expected source terms are calculated based on ANSI/ANS-18.1-1999 and NUREG-0017
- RCS specific activities provided in ANSI/ANS-18.1 are adjusted using APR1400 design-specific parameters
- Activity for CVCS components are calculated using SHIELD-APR code based on expected RCS specific activity

1.2 BOP and Radwaste Systems

❑ Secondary System Activity

- Since the SGs are assumed to have tube leaks, the secondary system is considered to contain radioactive sources
- Design basis SG leak rate is 3,270 L/day (0.6 gal/min) for both SGs
- Radionuclides are removed from the secondary system by ion exchangers in the SGBDS and CPS, decay, and main steam leakage

❑ Source Terms for Radwaste Systems

- LWMS
  - LWMS collection tanks (EWT, FDT, CWT) process the input flows as follows:
    - EWT : Equipment drain sump and CCW drains
    - FDT : Floor drains from Containment, Auxiliary and Compound Buildings
    - CWT : TGB drain system and Chemical waste drain pump
  - DIJESTER code used to estimate the LWMS source terms

1.2 BOP and Radwaste Systems

❑ Source Terms for Radwaste Systems (cont'd)

- GRS
  - Input sources to the GRS are the vent gases from the RDT, VCT, EDT and gas stripper
  - Considering activity buildup, GRS source terms are calculated by differential equations
- SWMS
  - Source terms for SRLST are calculated by summing the source terms for the CVCS resins considering the decay for up to 10 years of storage
  - Source terms for LASRT are calculated by assuming that LASRT is filled with spent resins generated from LWMS, SFPCCS and SGBDS

2. Radwaste Management Systems

2.1 Design Requirements for Radwaste Systems

2.2 Liquid Waste Management System (11.2)

2.3 Gaseous Waste Management System (11.3)

2.4 Solid Waste Management System (11.4)

2.5 Key Review Items

2.1 Design Requirements for Radwaste Systems

- 10CFR50, App. A, GDC 60, “Control of Releases of Radioactive Materials to the Environment”
- 10CFR50, App. A, GDC 61, “Fuel Storage and Handling and Radioactivity Control”
- 10CFR20, App. B, “Annual Limits on Intake (ALIs) and Derived Air Concentrations (DACs) of Radionuclides~”
- 10CFR50, App. I, “Numerical Guides for Design Objectives and Limiting Conditions for Operation to Meet the Criterion ALARA~”
- ANSI 55.1, “Solid Radioactive Waste Processing System for Light Water Reactor Plants”, 1992 (Reaffirmed 2009)
- ANSI 55.4, “Gaseous Radioactive Waste Processing System for Light Water Reactor Plants”, 1993
- ANSI 55.6, “Liquid Radioactive Waste Processing System for Light Water Reactor Plants”, 1993 (Reaffirmed 2007)
- RG 1.143, “Design Guidance for Radioactive Waste Management Systems, Structures, and Components~”, Rev.2, 2001
- RG 4.21, “Minimization of Contamination and Radioactive Waste Generation: Life-Cycle Planning”, 2008

2.2 Liquid Radwaste Management System

❑ Objectives

- Collect, process, and hold-up radioactive or potentially radioactive liquid wastes generated during normal plant operation, including AOO
- Provide sufficient processing capacity, redundancy, and flexibility to treat the liquid radwaste in a manner to reduce the radionuclide concentrations to levels that do not exceed the ECLs

❑ System Classification

- Non-safety related system
- Seismic category is in accordance with RG 1.143
- Radwaste Safety Classification : RW-IIa or RW-IIc

❑ Design Features

- Utilizes R/O technology to improve performance
- Provides pretreatment to remove the organic matters
- Provides ion exchangers to remove the specific ions such as Cs, Rb prior to discharge to Monitor Tank

2.2 LWMS (cont'd)

❑ Process Flow Diagram of LWMS

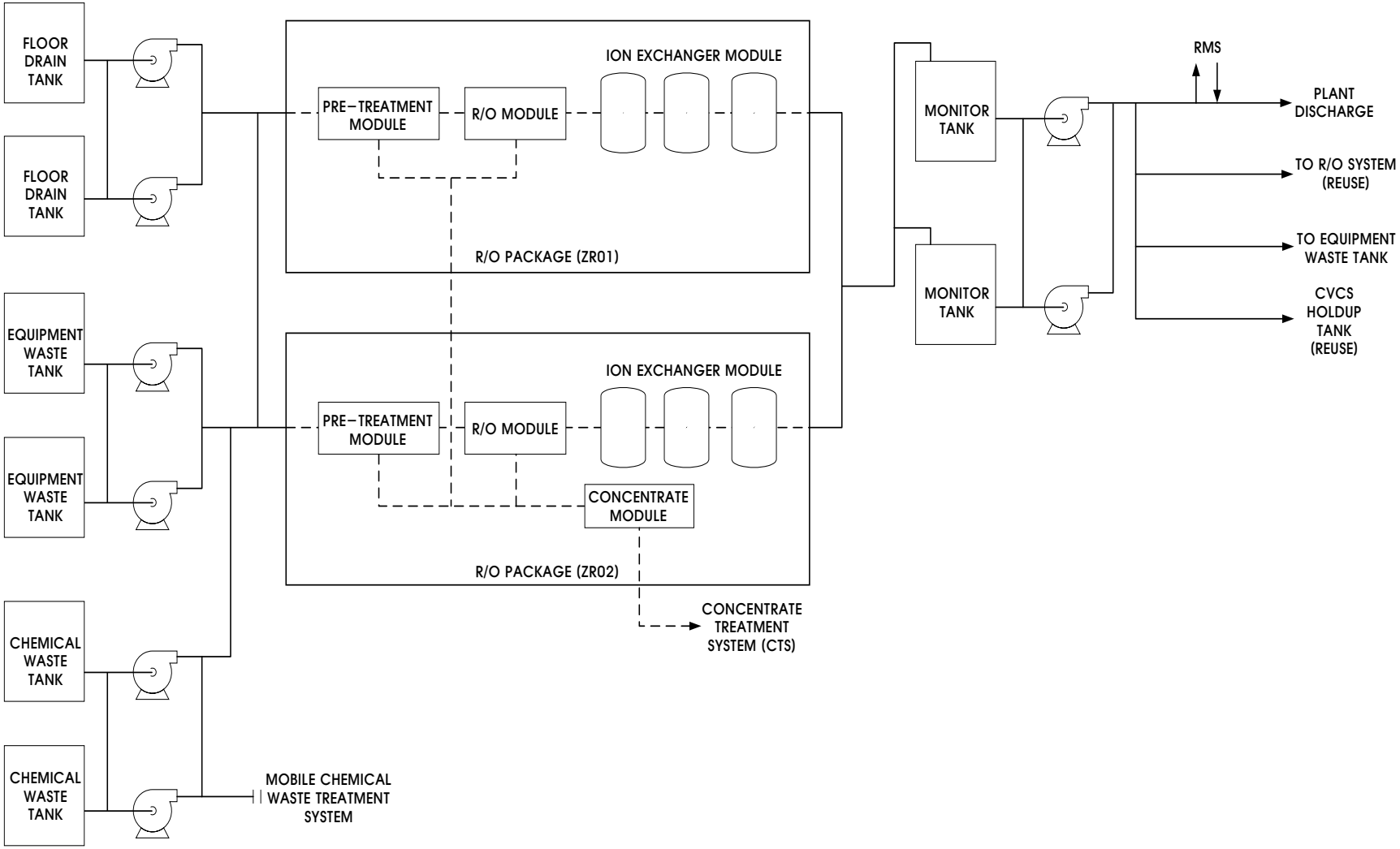

2.3 Gaseous Radwaste Management System

Objectives

- To collect and process the radioactive waste gases during normal operation
- To meet the gaseous effluent release limits during normal operation and AOO

System Classification

- Non-safety related system
- Seismic category is in accordance with RG 1.143
- Radioactive Safety Classification : RW-IIa

Design Features

- Uses charcoal delay beds for delay and decay of radioactive nuclides
- Provides capability to delay Xe for not less than 45 days
- Prevents degradation of charcoal delay beds using chilled water control and moisture removal methods
- Provides gas concentration monitor and alarm to prevent hydrogen explosion
- Provides isolation valve in the Compound Building HVAC exhaust to close automatically on high radiation level indication

2.3 GWMS (cont'd)

❑ Process Flow Diagram of GRS

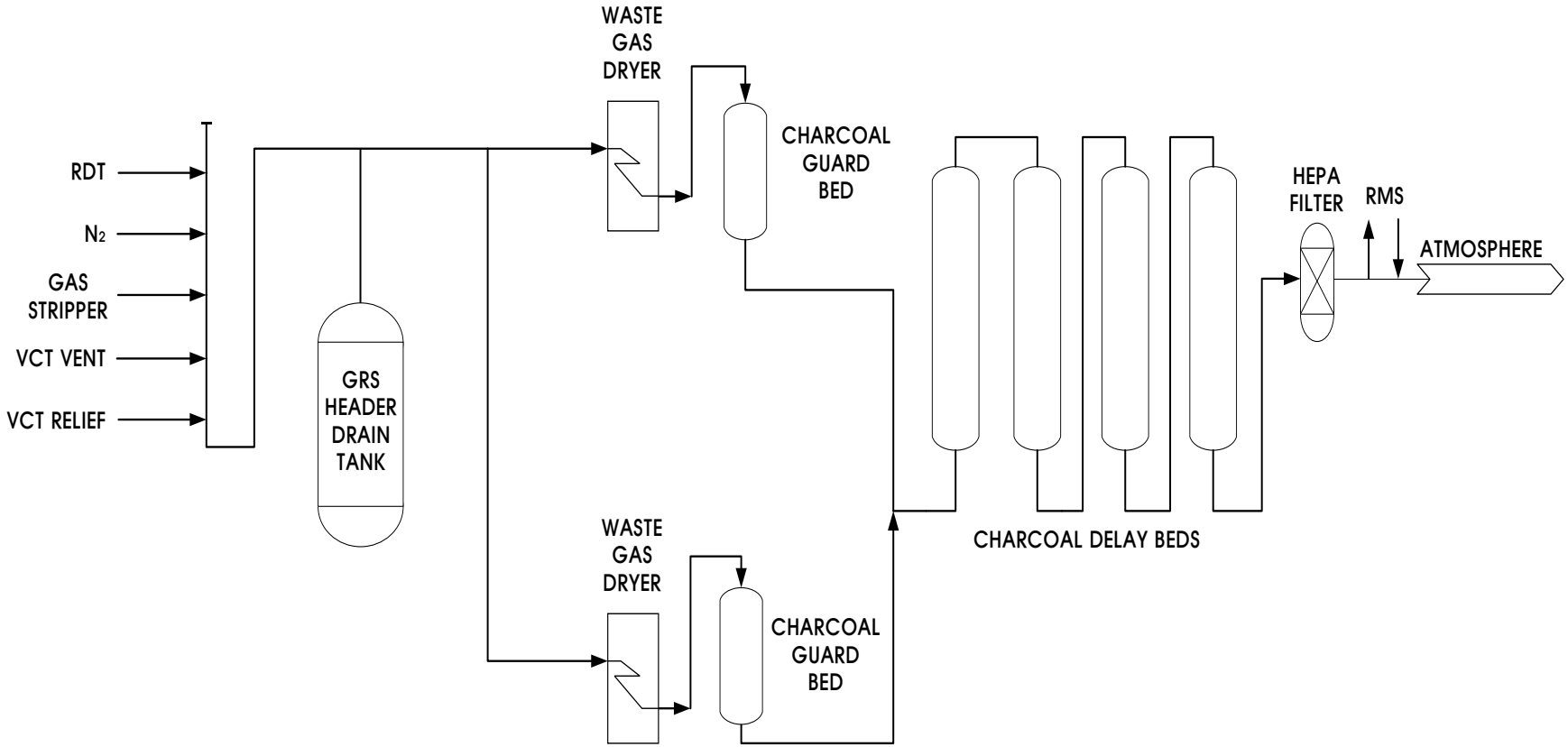

2.4 Solid Radwaste Management System

- **Objectives**
  - Provide storage capability for high and low activity spent resins
  - Provide handling and packaging capability for spent filters
  - Provide drying and packaging capability for R/O concentrate
  - Provide sorting and compacting capability for dry active waste (DAW)
  - Provide space and guidance for COL Applicant to facilitate dewatering and packaging of spent resins into disposable containers (COL item 11.4(3))

- **System classification**
  - Non-safety related system
  - Seismic Classification in accordance with RG 1.143
  - Radioactive Safety Classification : RW-IIa (for high and low activity spent resin tanks, and concentrate treatment subsystem)

- **Design Features**
  - Provide SRLST to store the high activity spent resin up to 10 years
  - Provide LASRT to temporarily store low activity spent resin for packaging for shipment and disposal
  - Provide filter handling subsystem to remove filters from filter housing, move to capping area, and package into disposable container
  - Provide R/O concentrate treatment subsystem to dry R/O concentrate in drums
  - Provide sorting table and compactor to reduce the volume of miscellaneous DAW
  - Provide space and guidance for COL Applicant to process spent resins in accordance with 10 CFR 61.56 requirement and ANSI 40.37(COL item 11.4(3))

2.4 SWMS (cont'd)

❑ Process Flow Diagram of SWMS

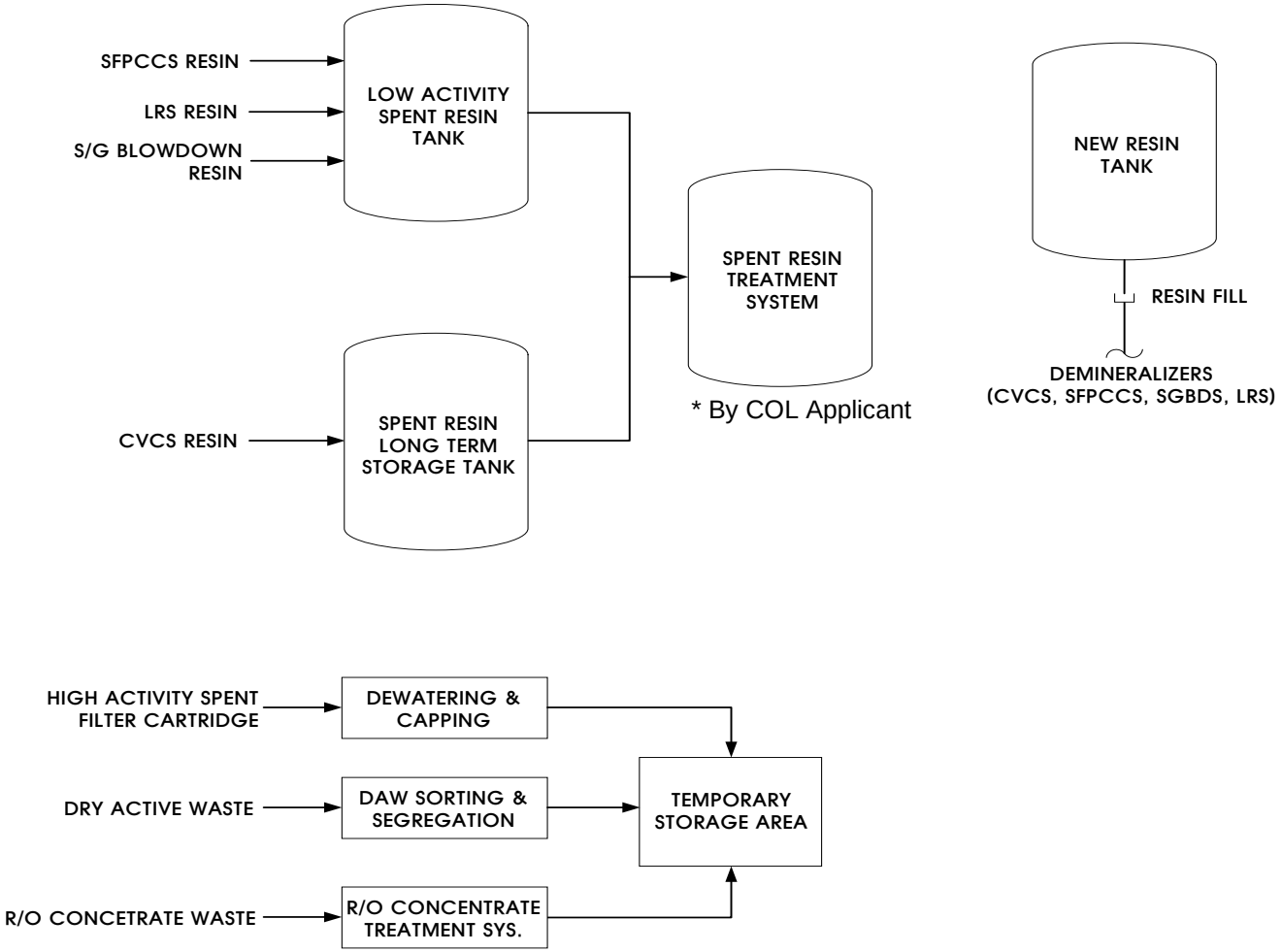

2.5 Key Review Items

- **Open Item : RAI 8201 Q11.02-6 Rev.1, Issued (9/28/15); Responded (9/8/16)**
  - Description of issue
    - Provide detergent liquid effluent process options including comparisons to the ECLs in 10 CFR Part 20, Appendix B, Table 2, Column 1; and liquid effluent doses using the LADTAP II code, for 10 CFR 50, Appendix I compliance.
  - Resolution
    - Effluent from the detergent waste tank is either discharged to the environment via the sole monitored discharge pipe or by the LWMS depending on the results of the sampling and analysis
    - The impact on the ECLs and doses to the public is already incorporated since the PWR-GALE code takes into account the additional releases from the detergent waste

2.5 Key Review Items (cont'd)

- **Open Item: RAI 8270 Q11.02-7 Rev.1, Issued (10/19/15); Responded (7/6/16)**
  - Description of issue
    - Request for consistent changes throughout sections 11.2, 11.3, 11.4 and 10.4.8, and the source terms for the components described in DCD section 10.4.8.
  - Resolution
    - The descriptions of system boundaries and their corresponding safety classifications in Sections 11.2, 11.3, 11.4 and 10.4.8 have been revised to be consistent.
    - The source terms for the components described in DCD section 10.4.8 and their safety classifications are specified in DCD table 10.4.8-4.

3. Process & Effluent Rad. Monitoring System (11.5)

3.1 Process & Effluent Rad. Monitoring System

3.2 Key Review Items

3.1 Process & Effluent Radiation Monitoring System

❑ Objectives

- Measures and records radioactivity levels of the liquid and gaseous process streams and effluents from LWMS, GWMS and other process systems during normal operation, AOO, and Postulated Accident.

❑ Function of PERMSS

- Provide early warning of malfunctioning or inappropriate operation of the radioactive systems or release of radioactive effluents.
- Provide monitoring of liquid and airborne activity in selected locations and effluent paths for postulated accidents - Iodine, particulates, and gases as well as grab samples.
- Generate alarms, indications, and controls the release of potential radioactive material.

❑ Classification

- Non-safety-related except for containment air monitors and MCR air intake monitors (SC-3)

3.1 PERMSS (cont'd)

❑ Design Criteria

- NUREG-1301, "Offsite Dose Calculation Manual Guidance: Standard Radiological Effluent Controls for Pressurized Water Reactors," April 1991.
- RG 1.21, "Measuring, Evaluating, and Reporting Radioactive Material in Liquid and Gaseous Effluents and Solid Waste," June 2009
- RG 1.45, "Reactor Coolant Pressure Boundary Leakage Detection Systems," Rev.1
- RG 1.97, "Criteria for Accident Monitoring Instrumentation for Nuclear Power Plants," Rev.4
- RG 4.21, "Minimization of Contamination and Radioactive Waste Generation: Life-Cycle Planning," June 2008
- ANSI/HPS N13.1 "Sampling and Monitoring Releases of Airborne Radioactive Substance from the Stack and Ducts of Nuclear Facilities," January 1999
- IEEE Std. 603 "IEEE Standard Criteria for Safety Systems for Nuclear Power Generating Stations," 1991

3.1 PERMSS (cont'd)

❑ Design Features (cont'd)

- PERMSS consists of gaseous PERMSS and liquid PERMSS.
- Depending upon the installation configuration, monitors could be Off-line, In-line, or On-line type detector.
- The detector types are designed to facilitate maintenance and calibration, while minimizing the effect of background radiation.
- Display of radiation level and alarms are basic functions provided by all monitors.
- The radiation detectors are located in easily accessible areas and have sufficient shielding.
- Safety-related PERMSS are environmentally and seismically qualified.

3.1 PERMSS (cont'd)

❑ Design Features (cont'd)

- Gaseous PERMSS monitors include the following:
  - High energy line break area HVAC effluent monitor (Off-line)
  - Auxiliary building controlled area HVAC exhaust monitor (Off-line)
  - Containment purge effluent monitor (Off-line)
  - Containment air monitor (Off-line)
  - Fueling handling area HVAC effluent monitor (Off-line)
  - Condenser vacuum pump vent effluent (Off-line)
  - MCR air intake monitor (In-line)
  - GWMS exhaust monitor (Off-line)
  - Compound building HVAC effluent monitor (Off-line)
  - Main steam line monitor (On-line)
  - Compound building exhaust monitor (Off-line)
- All the monitors are non-safety related except the containment air monitor and MCR air intake monitor.
- The MCR air intake monitor generates BOP ESFAS signal for actuation of MCR emergency ventilation system and the containment air monitor is used to detect RCS leakage in accordance with RG 1.45.
- Similarly the N-16 portion of the main steam line monitor detects primary to secondary leakage.

3.1 PERMSS (cont'd)

❑ Design Features

- Liquid PERMSS monitors include the following:
  - CVCS letdown monitor (Off-line)
  - CVCS gas stripper effluent monitor (Off-line)
  - Condensate receiver tank outlet monitor (Off-line)
  - Steam Generator blowdown and downcomer monitor (Off-line)
  - CCW supply header monitor (Off-line)
  - Essential service water pump discharge header monitor (Off-line)
  - CPS area sump water monitor (Off-line)
  - LWMS effluent monitor (Off-line)
  - Fire pump and waste water treatment building drain monitor (Off-line)
  - Condenser pit sump water drain monitor (Off-line)
- All the monitors are non-safety related.
- The condensate receiver tank outlet monitor automatically diverts the condensate flow to the LWMS when high radioactivity is detected.
- The Steam Generator blowdown monitor, CCW supply header monitor, and Essential service water pump discharge monitor provide leak detection function while the CCW supply header monitor provides additional heat exchange isolation function.
- The CPS area sump water monitor, Fire pump and waste water treatment building drain monitor, and Condenser pit sump water drain line monitor stop sump pumps.

3.2 Key Review Items (cont'd)

- **Open Items: RAI 8087 Q.11.05-1 & RAI 8088 Q.11.05-2, Issued (8/7/15); Responded (5/8/16, Rev.1)**
  - Description of issue
    - Provide the monitor information in DCD texts: functions and safety related requirements; radiation detection ranges; process configuration; location; applicable regulatory guides; alarms and interlocks; sampling stations; purging of sample lines; safety classification; calibration and quality assurance; correlation to ODCM, REMP, and/or PCP
  - Resolution
    - The requested monitor information have been added and revised in the response with the exception of QA provisions of each monitor and the correlation to the operating programs, which will be supplemented in a revised response.

3.2 Key Review Items (cont'd)

- **Open Item: RAI 8203 Q.11.05-3, Issued (9/23/15); Responded (6/13/16, Rev.2)**
  - Description of issue
    - Address the sensitivity, response time, and alarm limit for the primary-to-secondary leakage detection instrumentation.
    - Provide additional information relating to the steam line effluent monitors.
  - Resolution
    - The information for the primary-to-secondary leakage detection instrumentation is not included in the ITAAC, as they are not used for the design-basis analysis.
    - A calculation to demonstrate the ability to monitor N-16 activity in the main steam line is provided.
    - Details in Appendix 11B shows compliance with monitoring SG tube leakage.

4. Design Evaluation (11.2 – 11.4, 11B)

4.1 Compliance to 10 CFR 50 App.I & 20 App.B

4.2 Radwaste System Failure Analysis

4.3 RW Classification & SG Leak Detection

4.1 Compliance to 10 CFR 50 App.I & 20 App.B

❑ Annual Gaseous/Liquid Effluents Calculation

- PWR-GALE was modified to incorporate ANSI/ANS-18.1(1999) per RG 1.112

❑ Offsite Public Doses due to Normal Operation

- Enveloping X/Q of 2.0E-05 s/m^3 and D/Q of 2.0E-07/m^2 were used to bound most US sites
- LWMS discharge is assumed to be diluted by a cooling water flow of 10,000 gpm
- GASPAR II and LADTAP II codes are used for offsite dose calculations based on RG 1.109
- APR1400 design complies with public dose limits of 10 CFR 50 App.I and ECL of 10 CFR 20 App.B
  - Estimated doses to max. organ due to gaseous and liquid effluents are 14.5 mrem/yr and 4.05 mrem/yr, respectively
  - Design basis effluent concentrations at EAB are within 18.0% of ECL for liquid and 16.2% for gaseous effluents

4.2 Radwaste System Failure Analysis

❑ Liquid Radwaste System Failure Analysis

- CVCS Boric acid storage tank (BAST) was determined to cause the worst consequence (i.e., contains the highest source in the yard area)
- Concentration in nearest potable water was estimated based on the guidance in BTP 11-6
- Minimum required dilution factor which can meet the concentration limits for potable water in 10 CFR 20 App.B was estimated to be 9,340

❑ Gaseous Radwaste System Failure Analysis

- Inadvertent bypass of charcoal delay beds in GRS is assumed
- Iodines and particulates are removed by the pre-filter and guard beds
- Activity released from a waste gas system failure is based on 1% fuel failure in accordance with BTP 11-5
- RADTRAD code is used for dose estimation with short term χ/Q of 1.0E-03 s/m^3
- Estimated doses at EAB and LPZ are 1.16 mrem, 0.255 mrem, respectively and meet the dose limit of 100 mrem

4.3 RW Classification and SG Leak Detection

❑ Classification of Radwaste Systems

- Evaluated for LWMS, GRS, SWMS and SGBDS per RG 1.143
- Based on 1% fuel defect source term
- Radwaste systems are classified as follows:
  - LWMS : RW-IIa or RW-IIc
  - GWMS, SWMS : RW-IIa
  - SGBDS : RW-IIc

❑ Primary-to-Secondary Leakage Detection Capability

- NEI 97-06 requires that the plant shall be able to detect a SG leak rate of 30 gal/day
- SG tube leakage is detected by main steam line N-16 monitors
- Estimated N-16 concentrations at detector location range from 3.68×10^{-4} to 1.68×10^{-1} Bq/cm^3 depending on the power level
- The SG leakage of 4.73 L/hr (30 gal/day) can be detected as N-16 monitor is capable of detecting 1.0×10^{-4} to 1.0×10^{2} Bq/cm^3

5. Open Items & Summary

❑ Open Items

- Responses for RAI Q11.2-6 and Q11.2-7 were already submitted on 9/8/16 and 7/6/16, respectively
- Responses for RAI Q11.05-1 and Q11.05-2 will be submitted by the end of Dec. 2016
- Response for RAI Q.11.05-3 has been submitted on 6/13/16

❑ Summary

- Radwaste management systems and PERMSS for APR1400 are designed to comply with the relevant NRC requirements
- Design evaluation shows that APR1400 complies with the public dose limits of 10CFR50 App.I and the ECL of 10CFR20 App.B
- LWMS and GRS failure analyses are performed based on BTP 11-6 and BTP 11-5 and satisfy the criteria

6. Acronyms

- AOO: Anticipated Operational Occurrences
- BAST : Boric Acid Storage Tank
- BTP : Branch Technical Position
- CCW: Component Cooling Water
- CPS : Condensate Polishing System
- CVCS: Chemical and Volume Control System
- CWT : Chemical Waste Tank
- DAW : Dry Active Waste
- DF: Decontamination Factor
- D/Q : Deposition factor
- EAB : Exclusion Area Boundary
- ECL : Effluent Concentration Limit
- EDT: Equipment Drain Tank
- EWT : Equipment Waste Tank
- FDT : Floor Drain Tank
- GWMS: Gaseous Waste Management System
- HUT : Holdup Tank
- LASRT: Low-Activity Spent Resin Tank
- LWMS: Liquid Waste Management System
- MCR: Main Control Room
- NEI: Nuclear Energy Institute
- ODCM: Offsite Dose Calculation Manual
- PA: Postulated Accident
- PCP : Process Control Program
- PERMSS: Process and Effluent Radiation Monitoring and Sampling System
- RCS: Reactor Coolant System
- RDT: Reactor Drain Tank
- REMP: Radiological and Environmental Monitoring Program
- R/O : Reverse Osmosis
- SFPCCS : Spent Fuel Pool Cooling and Cleanup System
- SG: Steam Generator
- SGBDS: Steam Generator Blowdown System
- SRLST: Spent Resin Long-term Storage Tank
- SWMS: Solid Waste Management System
- VCT: Volume Control Tank
- X/Q : Atmospheric dispersion factor

United States Nuclear Regulatory Commission

Protecting People and the Environment

Presentation to the ACRS

Korea Electric Power Corporation
APR 1400 Design Certification Application Review

Safety Evaluation with Open Items: Chapter 11

RADIOACTIVE WASTE MANAGEMENT

October 4, 2016

Staff Review Team

- **Technical Staff**
  - **Stephen Williams** – DCD Section 11.1 to 11.5
    Radiation and Accident Consequences Branch
  - **Zachary Gran**– DCD Sections 11.1 to 11.5
    Radiation and Accident Consequences Branch
  - **Derek (Rick) Scully**– DCD Sections 11.2 to 11.4
    Plant Systems Branch
  - **Jing (Deanna) Zhang** – DCD Section 11.5
    Instrumentation, Controls & Electrical Engineering

- **Project Managers**
  - **Jeffrey Ciocco** – Lead Project Manager
  - **Tarun Roy**– Chapter Project Manager

Overview of DCD Review

		Number of Questions	Number of Open Items
11.1	Source Terms	4	0
11.2	Liquid Waste Management System	10	2
11.3	Gaseous Waste Management System	10	0
11.4	Solid Waste Management Systems	4	0
11.5	Process and Effluent Radiological Monitoring and Sampling Systems	6	3
Totals		34	5

Technical Topics of Interest:
DCD Section 11.1 – Source Terms

U.S.NRC
United States Nuclear Regulatory Commission
Protecting People and the Environment

SER Section 11.1 – No Open Items:

- Coolant source terms based on modified ANSI/ANS-18.1-1999 and an applicant modified GALE Code.

- Staff audited the KHNP modified GALE code.
  - Staff requested executable files and the source code files for review.
  - Staff determined that the only changes made to the GALE code were to update to the ANSI 18.1-1999 Standard.

- Applicant followed SRP Section 11.1 and Regulatory Guide (RG) 1.112 "Calculation of Releases of Radioactive Materials in Gaseous and Liquid Effluents From Light-Water-Cooled Nuclear Power Reactors"

- No COL Information Items

Technical Topics of Interest:
DCD Section 11.2 – Liquid Waste Management System

U.S.NRC
United States Nuclear Regulatory Commission
Protecting People and the Environment

SER Section 11.2 with Open Items:

- LWMS design basis and features, system description, processing methods, and capacities; seismic and quality group classifications; performance characteristics; instrumentation and alarm systems; automatic termination of liquid effluent release; ALARA design features; and boundary definition

- Basis and development of liquid process waste streams, estimated inputs to LWMS, and treatment process performance (decontamination factors)

- KHNP proprietary version of the PWR-GALE code used to calculate liquid effluent releases (source term) during normal operations including AOOs described in KHNP RAI Technical Responses.

Technical Topics of Interest
DCD Section 11.2 – Liquid Waste Management System

U.S.NRC
United States Nuclear Regulatory Commission
Protecting People and the Environment

SER Section 11.2 with Open Items (Cont'd):

- Staff confirmed the methodology, basis, and assumptions used to comply with Effluent Concentration Limits (ECLs) in 10 CFR Part 20, Appendix B, Table 2, Column 2; public dose limits in 10 CFR Part 20; and design objectives in 10 CFR Part 50, Appendix I

- Epoxy coating system used to line LWMS cells/cubicles and comply with 10 CFR 20.1406 and conform to RG 4.21 and RG 1.54 (recognizing more recent standards may be used)

- 10 CFR 20.1406, Tier 1 and ITAAC information, TS, and pre-operational testing

Technical Topics of Interest
DCD Section 11.2 – Liquid Waste Management System

U.S.NRC
United States Nuclear Regulatory Commission
Protecting People and the Environment

SER Section 11.2 with Open Items (Cont'd):

- COL Information Items:
  - Mobile and temporary radwaste processing equipment and interconnection to plant systems
  - Release points, effluent temperature, shape of flow orifice, etc.
  - Hydrological data and groundwater or surface analysis comply with ECLs in 10 CFR Part 20, Appendix B, Table 2 for liquid tank failure
  - Offsite liquid effluent doses comply with 10 CFR Part 20; 40 CFR Part 190 under 10 CFR 20.1301(e); and 10 CFR Part 50, Appendix I
  - Cost Benefit Analysis (CBA)
  - Piping and Instrumentation Diagrams (P&IDs)

Technical Topics of Interest
DCD Section 11.2 – Liquid Waste Management System

U.S.NRC
United States Nuclear Regulatory Commission
Protecting People and the Environment

SER Section 11.2 with Open Items (Cont'd):

- **Open Item 11.02-6 (RAI 8201, Question 11.02-6)**: Provide liquid effluent tracking process for detergent radwaste tank liquid effluent releases including comparisons to the ECLs in 10 CFR Part 20, Appendix B, Table 2, Column 1; and liquid effluent doses using the LADTAP II code, for 10 CFR 50, Appendix I compliance.

- **Open Item 11.02-7 (RAI 8270, Question 11.02-7)**: Request for consistent changes throughout sections 11.2, 11.3, 11.4 and 10.4.8. In addition, the staff requested the applicant include the system source terms for the components described in DCD section 10.4.8.

  - Applicant recently updated Response: Staff evaluation determines the response acceptable and therefore RAI is a confirmatory item.

Technical Topics of Interest
DCD Section 11.3 – Gaseous Waste Management System

U.S.NRC
United States Nuclear Regulatory Commission
Protecting People and the Environment

SER Section 11.3 with Open Items:

- GWMS design basis and features, system description, processing methods, and capacities; seismic and quality group classifications; performance characteristics; instrumentation and alarm systems; automatic isolation of gaseous waste process flow and effluent release; hydrogen and oxygen monitoring; ALARA design features; and release point

- Basis and development of gaseous process waste streams, estimated inputs to GWMS, treatment process performance (removal efficiencies and holdup time), and building ventilation systems

Technical Topics of Interest
DCD Section 11.3 – Gaseous Waste Management System

U.S.NRC
United States Nuclear Regulatory Commission
Protecting People and the Environment

SER Section 11.3 with Open Items (Cont'd):

- KHNP proprietary version of the PWR-GALE code used to calculate gaseous effluent releases (source term) during normal operations including AOOs described in KHNP RAI Technical Response.
- Staff confirmed the methodology, basis, and assumptions used to comply with ECLs in 10 CFR Part 20, Appendix B, Table 2, Column 1; public dose limits in: 10 CFR Part 20; and design objectives in 10 CFR Part 50, Appendix I
- Methodology, basis, and assumptions to assess radiological impacts due to postulated failure of a waste gas surge tank and charcoal bed leak
- No mobile or temporary equipment or connections to permanently installed equipment considered in GWMS design
- 10 CFR 20.1406, Tier 1 and ITAAC information, TS, and pre-operational testing

Technical Topics of Interest
DCD Section 11.3 – Gaseous Waste Management System

U.S.NRC
United States Nuclear Regulatory Commission
Protecting People and the Environment

SER Section 11.3 with Open Items (Cont'd):

- COL Information Items:
  - Onsite vent stack design parameters and release point characteristics
  - Release points, effluent temperature, shape of flow orifice, etc.
  - Offsite gaseous effluent doses comply with 10 CFR Part 20; 40 CFR Part 190 under 10 CFR 20.1301(e); and 10 CFR Part 50, Appendix I
  - CBA
  - P&IDs

Technical Topics of Interest
DCD Section 11.4 – Solid Waste Management System

U.S.NRC
United States Nuclear Regulatory Commission
Protecting People and the Environment

SER Section 11.4 – No Open Items:

- SWMS design basis and features, system description, processing methods, and capacities; seismic and quality group classifications; performance characteristics; instrumentation and alarm systems; annual estimated waste generation rates; ALARA design features; capability to move drums and HICs; provision for mobile or temporary equipment; and boundary definition
- No direct liquid and gaseous effluent releases from SWMS (associated releases and compliance with ECLs and dose limits are addressed in DCD Sections 11.2 and 11.3)
- Basis for design storage capacity of Class A, B, and C radioactive wastes

Technical Topics of Interest
DCD Section 11.4 – Solid Waste Management System

U.S.NRC
United States Nuclear Regulatory Commission
Protecting People and the Environment

SER Section 11.4 – No Open Items (Cont'd):

- Process Control Program (PCP)
  - Description of operational program for processing of Class A, B, and C LLRW to comply with 10 CFR 61.55 and 10 CFR 61.56
  - DCD adopts NEI PCP template 07-10A until a plant-specific PCP is developed to support plant operation
  - Approach acceptable given staff endorsement of NEI PCP template

- 10 CFR 20.1406, Tier 1 and ITAAC information, TS, and pre-operational testing

- Epoxy coating system used to line SRST rooms and comply with 10 CFR 20.1406, and conform to RG 4.21 and RG 1.54 (recognizing more recent standards may be used)

Technical Topics of Interest
DCD Section 11.4 – Solid Waste Management System

U.S.NRC
United States Nuclear Regulatory Commission
Protecting People and the Environment

SER Section 11.4 – No Open Items (Cont'd):

- COL Information Items:
  - Onsite radioactive waste storage
  - PCP and implementation milestones
  - Mobile/portable SWMS connections and other non-radioactive systems that may become contaminated and related operational procedures
  - Offsite laundry services or mobile compaction unit subsystem
  - CBA (addressed in DCD Sections 11.2 and 11.3)
  - Contract services or compaction equipment for solid waste
  - P&IDs
  - Mobile and temporary solid radioactive waste processing and interconnection to plant systems comply with 10 CFR 50.34a; 10 CFR 20.1406; and RG 1.143 "Design Guidance for Radioactive Waste Management Systems, Structures, and Components Installed in Light-Water-Cooled Nuclear Power Plants"

Technical Topics of Interest
DCD Section 11.5 – Process Effluent Radiation Monitoring and Sampling Systems

U.S.NRC
United States Nuclear Regulatory Commission
Protecting People and the Environment

SER Section 11.5 with Open Items:

- Process Effluent Radiation Monitoring and Sampling System (PERMSS) design basis and features, system descriptions, types, number, and locations of PERMSS monitors and samplers; seismic and quality group classifications; operational ranges, sensitivities, and alarms; system calibrations and provisions for built-in check sources; provisions for automatic isolation and termination features; and ALARA design features

- Plant process systems and effluent flow paths monitored by radiation monitoring and sampling equipment

- 10 CFR 20.1406, Tier 1 and ITAAC information, TS, and pre-operational testing

Technical Topics of Interest
DCD Section 11.5 – Process Effluent Radiation Monitoring and Sampling Systems

U.S.NRC
United States Nuclear Regulatory Commission
Protecting People and the Environment

SER Section 11.5 with Open Items (Cont'd):

- Offsite Dose Calculation Manual (ODCM)
  - Description of the operational program for controlling and monitoring all effluent releases and assessing offsite doses in accordance with 10 CFR 20.1301; 10 CFR 20.1302; 40 CFR Part 190 as referenced in 10 CFR 20.1301(e); 10 CFR Part 20, Appendix B, Table 2 ECLs; and design objectives of 10 CFR Part 50, Appendix I
  - DCD adopts NEI ODCM template 07-09A until a plant and site-specific ODCM is developed to support plant operation
  - Approach acceptable given staff endorsement of NEI ODCM template

- RCS leakage detection conforms to RG 1.45 (Revision 1) and ANSI N42.18-2004, and primary-to-secondary leakage detection conforms to NEI 97-06 for TS basis

Technical Topics of Interest
DCD Section 11.5 – Process Effluent Radiation Monitoring and Sampling Systems

U.S.NRC
United States Nuclear Regulatory Commission
Protecting People and the Environment

SER Section 11.5 with Open Items (Cont'd):

- COL Information Items:
  - Aspects beyond PERMSS design in accordance with RG 1.12, RG 1.33, and RG 1.45; and comply with 10 CFR Part 50, Appendix I for offsite doses from liquid and gaseous effluent streams.
  - ODCM with description of methods and parameters for radiation monitor setpoints and follow NEI ODCM template 07-09A
  - Radiological Effluent Monitoring Program (REMP) and follow NUREG-1301, NUREG-0133, NEI ODCM template 07-09A
  - Analytical procedures and sensitivity radioanalytical methods and type of sampling media
  - Procedures related to radiation monitoring instruments
  - Analytical procedures and sensitivity radioanalytical methods and sampling media type

Technical Topics of Interest
DCD Section 11.5 – Process Effluent Radiation Monitoring and Sampling Systems

U.S.NRC
United States Nuclear Regulatory Commission
Protecting People and the Environment

SER Section 11.5 with Open Items (Cont'd):

- **Open Item 11.05-1 and 11.05-2 (RAI 8087, Question 11.05-1 and RAI 8088 Question 11.05-2)**: Request for applicant to provide additional information in the descriptions of the LWMS and GWMS monitors.

- **Open Item 11.05-3 (RAI 8203, Question 11.05-3):** Request for clarification of the information on the Primary to Secondary Leak Detection calculation in DCD Appendix 11B.
  - Staff has reviewed the revised response to this question. Response was deemed to be acceptable. RAI is being tracked as a confirmatory item.

Conclusions
DCD Chapter 11

U.S.NRC
United States Nuclear Regulatory Commission
Protecting People and the Environment

- Resolution of 5 open items expected in Phase 4 of DCD review

- Significant COL Information Items:
  - Offsite liquid and gaseous offsite doses
  - Liquid tank failure analysis
  - P&IDs
  - Epoxy coating system
  - Related operational, analytical, and radiation monitoring procedures
  - CBA
  - PCP
  - ODCM

Conclusions
DCD Chapter 11

United States Nuclear Regulatory Commission
Protecting People and the Environment

Questions?

ACRONYMS

ALARA – as low as is reasonably achievable
ANSI – American National Standards Institute
AOOs – anticipated operational occurrences
ASTM – American Society for Testing and Materials
BTP- Branch Technical Position
CBA – cost-benefit analysis
CDI – conceptual design information
CFR – code of federal regulations
COL – combined license
DCD – design control document
ECLs – effluent concentration limits
EPA – Environmental Protection Agency
GL= Generic Letter
GDC – General Design Criterion
GSI – Generic Safety Issue
GWMS – gaseous waste management system
HEPA – high-efficiency particulate air
ITAAC – inspection, test, analysis, and acceptance criteria
LLRW – low-level radioactive waste
LWMS – liquid waste management system
NEI – Nuclear Energy Institute
NUREG – US Nuclear Regulatory Commission Regulation

ACRONYMS

ODCM – offsite dose calculation manual
PERMSS – process effluent radiation monitoring and sampling systems
P&IDs – piping and instrumentation diagrams
PCP – process control program
RAI – request for additional information
RCS – reactor coolant system
REMP – radiological environmental monitoring program
RG – regulatory guide
R/O – reverse osmosis
RTNSS – regulatory treatment of non safety sSE – Safety Evaluation
SER – safety evaluation report
SRP – standard review plan
SRST – spent resin storage tank
SWMS – solid waste management system
TMI – Three Mile Island
TS – technical specifications
USI – unresolved safety issue

United States Nuclear Regulatory Commission

Protecting People and the Environment

Presentation to the ACRS Subcommittee

Korea Hydro Nuclear Power Co., Ltd (KHNP)

APR1400 Design Certification Application Review

Safety Evaluation with Open Items: Chapter 2 (Section 2.3)

Chapter 2: SITE CHARACTERISTICS

October 04, 2016

Presentation Contents

- Staff Review Team
- Overview of Design Certification Application
- Technical Areas of Interest
  - 2.3 Meteorology

- **Technical Staff Presenters and Staff Review Team**
  - **Jason White- DCD Section 2.3 Meteorology and Oceanography Team**
  - **Jessica Voveris - DCD Section 2.3 Meteorology and Oceanography Team**

- **Project Managers**
  - **Jeff Ciocco – Lead PM**
  - **Tarun Roy– Chapter PM**

Technical Topics of Interest
Section 2.3 - Meteorology

United States Nuclear Regulatory Commission
Protecting People and the Environment

Section 2.3 - Meteorology

- The review involves the following sections of the APR1400 DCD:
  - 2.3.1 – Regional Climatology
  - 2.3.2 – Local Meteorology
  - 2.3.3 – Onsite Meteorological Measurements Program
  - 2.3.4 – Short-term Atmospheric Dispersion Estimates for Accident Releases
  - 2.3.5 – Long-term Atmospheric Dispersion Estimates for Routine Releases
  - 2.3.6 – Combined License Information
- The COL applicant is to provide this information as part of the COL application

Technical Topics of Interest
Section 2.3 - Meteorology

United States Nuclear Regulatory Commission
Protecting People and the Environment

- Initial Clarification Questions – 12
- RAI Questions – 10
- SE Confirmatory Items – 8
- SE Open Items – 0

U.S.NRC
United States Nuclear Regulatory Commission
Protecting People and the Environment

Meteorological Site Parameters

- The applicant identified meteorological site parameters related to:
  - Climatic Extremes and Regional Meteorological Phenomena, Including Severe Weather
  - Atmospheric Dispersion (Accident & Routine Releases)
- A COL applicant is required to compare its site characteristics to the APR1400 site parameters
- The staff performed its review of the APR1400 meteorological site parameter values, under SRP Section 2.0, to ensure they are representative of a reasonable number of sites that have been or may be considered for a COL application

Technical Topics of Interest
Section 2.3 - Meteorology

United States Nuclear Regulatory Commission
Protecting People and the Environment

Climatic Site Parameters

- Winter Precipitation (for Roof Load Design)
- Extreme Wind Speed (other than in Tornado/Hurricane)
  - Consistent with ASCE/SEI 7-05
- Tornado
  - Consistent with RG 1.76 Revision 1
- Hurricane
  - Consistent with RG 1.221
- Ambient Design Air Temperatures

Technical Topics of Interest
Section 2.3 - Meteorology

United States Nuclear Regulatory Commission
Protecting People and the Environment

Short-Term Atmospheric Dispersion Site Parameters for Accident Releases

- EAB and LPZ χ/Q Site Parameter Values
- MCR and TSC χ/Q Site Parameter Values

Long-Term Atmospheric Dispersion Site Parameters for Routine Releases

- Site Boundary and Food Production Area χ/Q and D/Q Values

Technical Topics of Interest
Section 2.3 - Meteorology

United States Nuclear Regulatory Commission
Protecting People and the Environment

FSAR Confirmatory Items:

- Confirmatory Item **2.3.1-1** and **2.3.1-2** (RAI 8012) both relate to corrections in FSAR Tier 1, Table 2.1-1, and Tier 2, Table 2.0-1.

- Confirmatory Item **2.3.1-3** (RAI 8012) related to revising FSAR Chapter 9.4 to include design ambient temperature exceedance values applied to HVAC systems.

- Confirmatory Item **2.3.1-4** (RAI 8012) related to identification of ambient temperature exceedance values in FSAR Tier 1, Table 2.1-1, and Tier 2, Table 2.0-1.

Technical Topics of Interest
Section 2.3 - Meteorology

United States Nuclear Regulatory Commission
Protecting People and the Environment

FSAR Confirmatory Items (continued):

- Confirmatory Item **2.3.4-1** (RAI 8211) related to updating FSAR Section 2.3.4 to include χ/Q values for the TSC.

- Confirmatory Item **2.3.4-2** (RAI 7912) related to updating FSAR Tables to include a definition of "effective χ/Q."

- Confirmatory Items **2.3.4-3** (ML15132A598) and **2.3.4-4** (ML15132A598) related to updating FSAR Tier 1, Table 2.1-1, and Tier 2, Table 2.0-1, to include a reference to DCD Tier 2, Tables 2.3-2 through 2.3-12, for MCR/TSC χ/Q values.

Technical Topics of Interest
Section 2.3 - Meteorology

United States Nuclear Regulatory Commission
Protecting People and the Environment

COL Information Items

- COL Information Item 2.0(1)
  - Demonstrate that the design meets the requirements imposed by the site-specific parameters and conforms to all design commitments and acceptance criteria
- COL Information Item 2.3(1)
  - Provide site-specific information on meteorology
- COL Information Item 2.3(2)
  - Perform the radiological consequences analysis and demonstrate that the related dose limits specified in 10 CFR 50.34 and GDC 19 are not exceeded, if the site-specific χ/Q values exceed the bounding values described in Table 2.3-1 to 2.3-12 of the FSAR

Conclusion
Section 2.3 - Meteorology

United States Nuclear Regulatory Commission
Protecting People and the Environment

- All regulatory requirements for Section 2.3 have been satisfied
- No remaining Open Items
- 8 remaining Confirmatory Items

ACRONYMS

- ADAMS- Agencywide Documents Access & Management System
- CFR- Code of Federal Regulations
- COL- Combined License
- DC - Design Certification
- DBA- Design Basis Accident
- DBE- Design Basis Event
- DCD- Design Control Document
- D/Q- Relative Deposition Factor ($1/m^2$)
- EAB – Exclusion Area Boundary
- EPRI- Electric Power Research Institute
- ESP- Early Site Permits
- FSAR- Final Safety Analysis Report
- GDC-General Design Criterion

ACRONYMS

- ISG- Interim Staff Guidance
- ITAAC- Inspections, tests, analyses, and acceptance criteria
- KHNP- Korea Hydro & Nuclear Power
- OI- Open Item
- PMWP- Probable Maximum Winter Precipitation
- RAI- Request for Additional Information
- RG- Regulatory Guide
- SAR- Safety Analysis Report
- SE- Safety Evaluation
- SRP- Standard Review Plan
- SSC- Structures Systems and Components
- URD- Utility Requirements Documents
- χ/Q – Atmospheric Dispersion Factor (sec/m^3)