Rancho Seco

Specific ISFSI License Renewal (SNM-2510) Docket 72-11

SMUD and AREVA TN meeting with the NRC
September 27, 2016

Agenda

- Introductions and resources
- ISFSI Background
- NRC Regulations & Guidance
- LRA Content
- Pre-Application Inspections
- Summary
- Proposed Schedule of Licensing Activities

Rancho Seco ISFSI Background

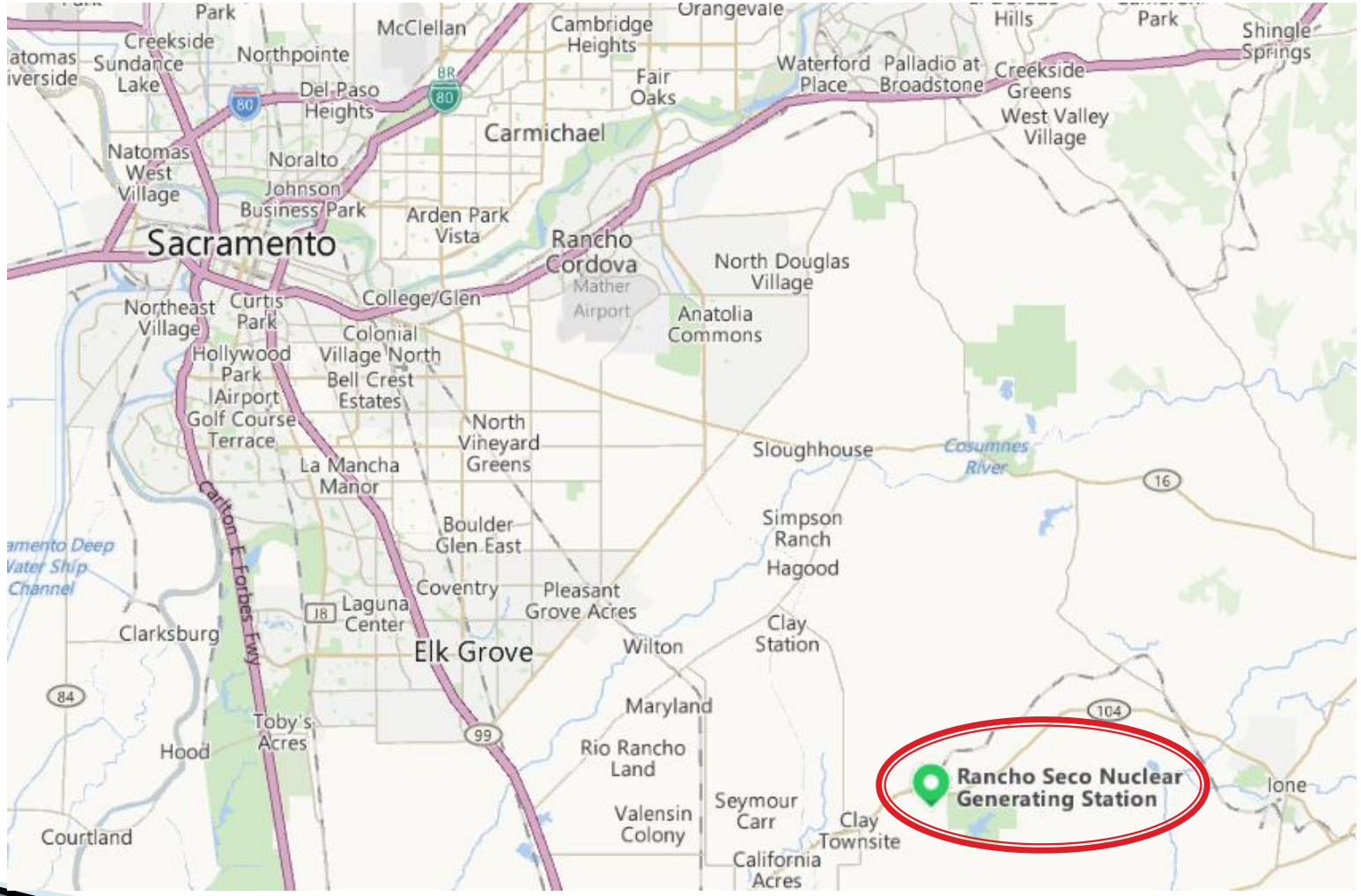

Rancho Seco ISFSI Background

- Located 26 miles southeast of Sacramento California, near Herald, CA
- Licensed: June 30, 2000
- DSCs based on Standardized NUHOMS® 24P
  - Fuel only (FO), Fuel & Control Components (FC),Failed Fuel (FF)
- HSMs based on Standardized NUHOMS® Model 80
- MP187 cask
- Expiration: June 30, 2020

Rancho Seco ISFSI License Amendments

- Amendment 1
  - Issue Date: March 21, 2005
  - Summary: Exemption from 10 CFR 72.44(d)(3) reporting requirements for liquid and gaseous effluents.
- Amendment 2
  - Issue Date: April 18, 2005
  - Summary: Authorized storage of 1 GTCC canister
- Amendment 3
  - Issue Date: August 11, 2009
  - Summary: Authorized storage of six fuel assemblies retrospectively classified as damaged into five FC-DSCs

Rancho Seco ISFSI License Exemptions

- Two active exemptions
  - 72.72(d) – duplicate recordkeeping for SNM related records
  - 72.44(d)(3) – effluent reports
- Both exemptions are;
  - Administratively required to support operations
  - No effect on aging
  - Will be acknowledged but no action requested in LRA

Rancho Seco ISFSI Background

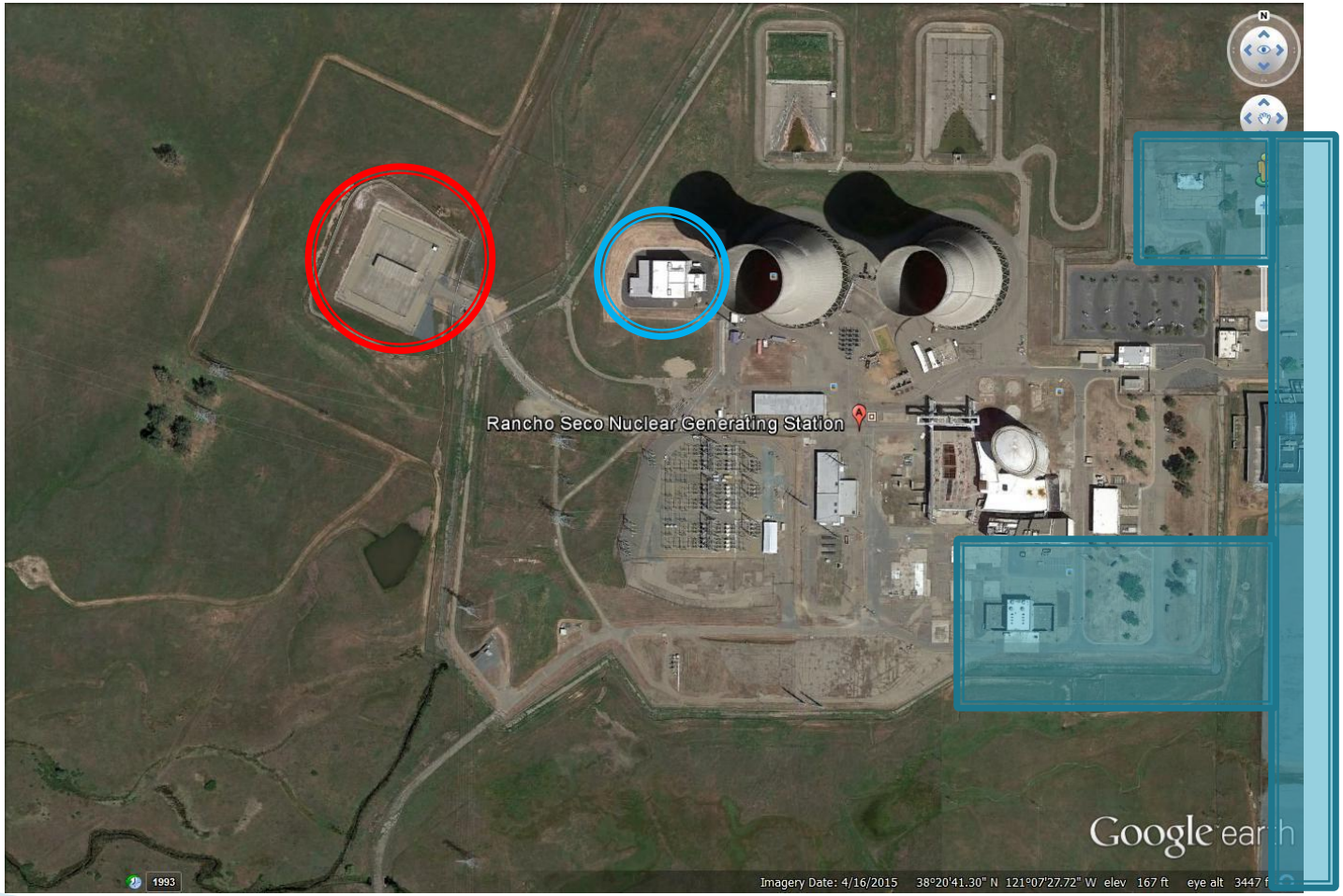

NUHOMS DSC for Rancho Seco

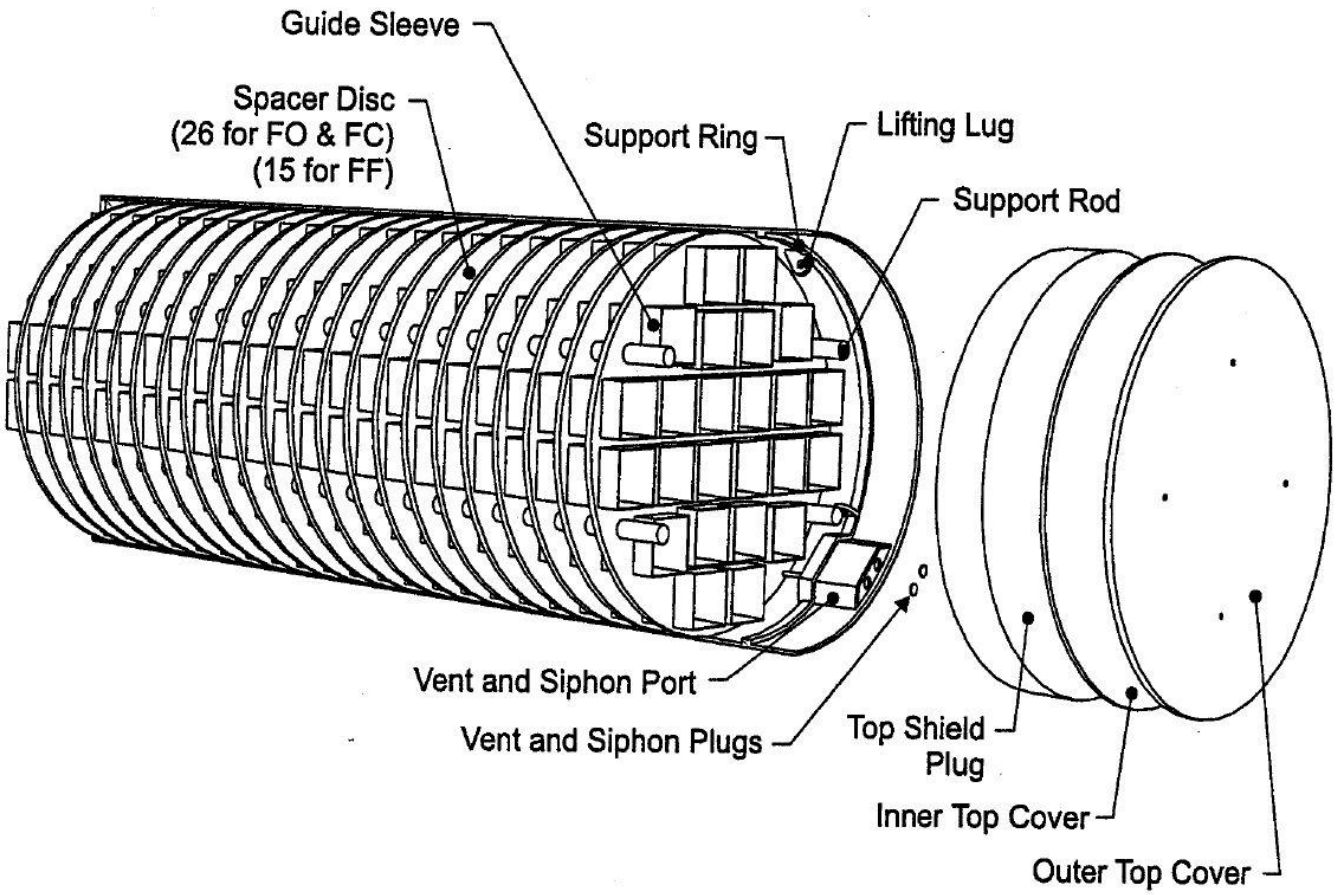

MP187 cask

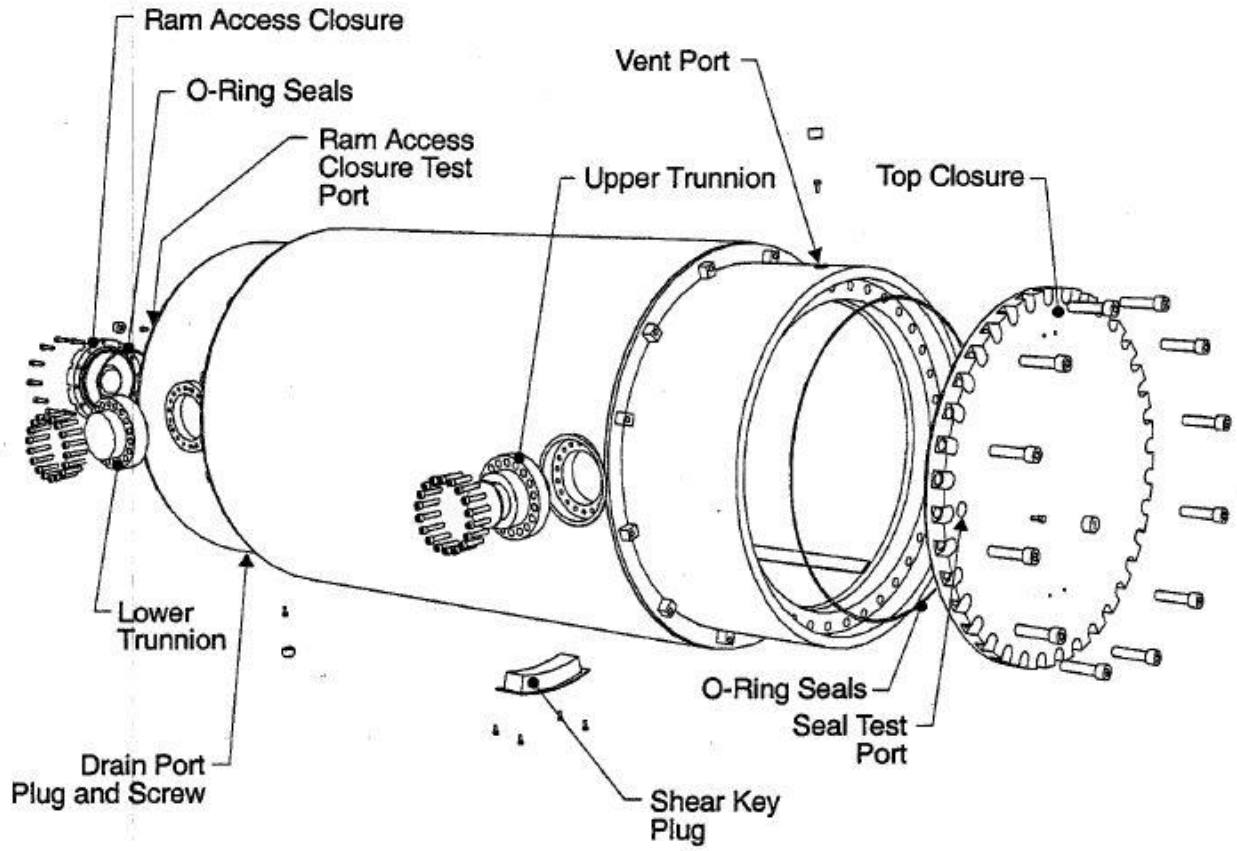
Ram Access Closure
O-Ring Seals
Ram Access Closure Test Port
Vent Port
Upper Trunnion
Top Closure
Lower Trunnion
Drain Port Plug and Screw
O-Ring Seals
Seal Test Port
Shear Key Plug

Typical HSM array

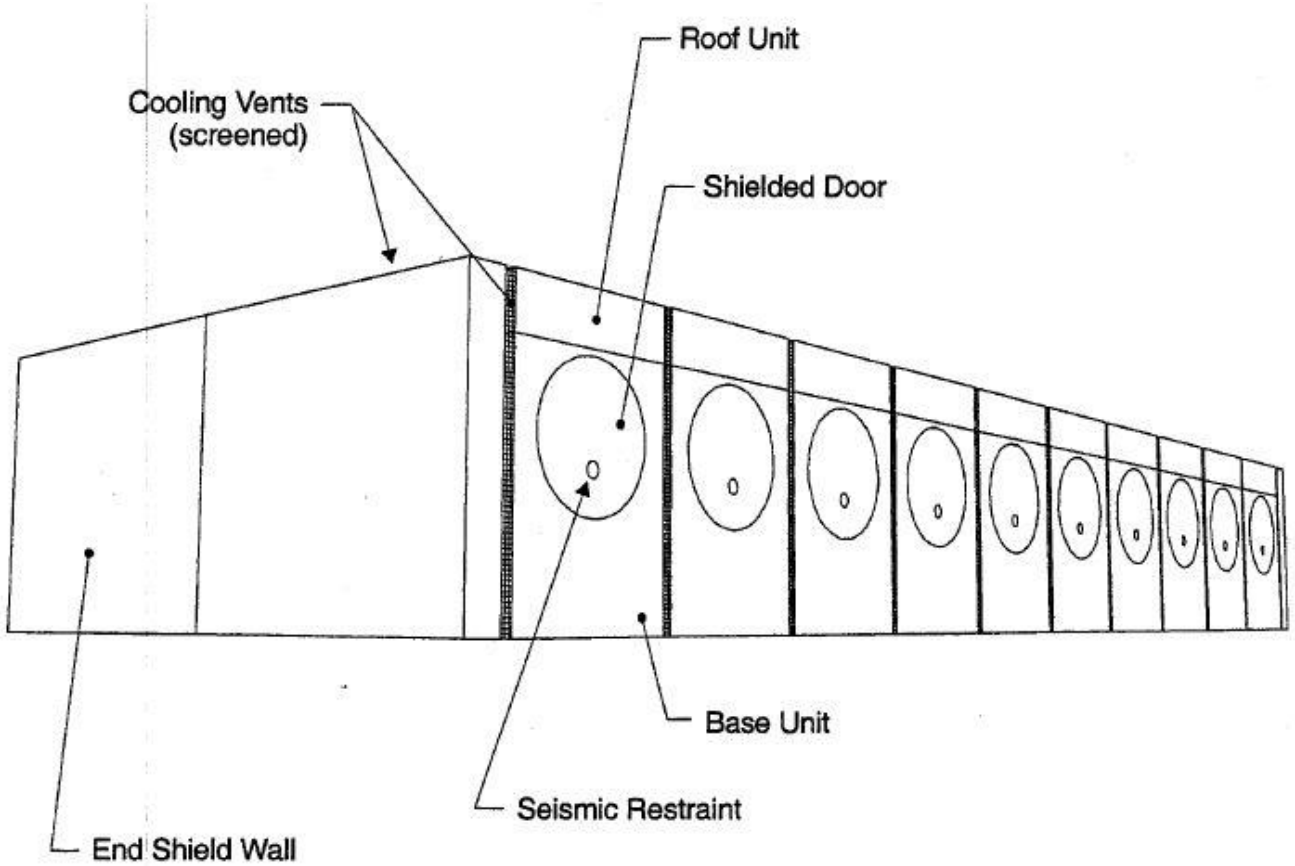

Rancho Seco Canisters

- 21loaded DSCs storing 493 fuel assemblies
  - 2-FO (Fuel Only)
  - 18-FC (Fuel and Control Components)
  - 1-FF (Failed Fuel)
- 1 loaded GTCC DSC
- FO/FC DSC models generally only for undamaged fuel (6 FAs retrospectively classified as damaged are stored in 5 FC-DSCs per Amend. 3)
- FF DSC model for damaged fuel

Rancho Seco Material Stored

- Permanently shut down in 1989, all 493 B&W fuel assemblies have 27 years or more cooling
- Maximum 38,187 MWd/ MTU burnup *
- Maximum 3.22 % wt. U-235 initial enrichment*
- License to store:
  - Total of 228.8 MTU intact and damaged spent fuel
  - 13.61 MT GTCC
- MP187 cask

* GC-859 November 2013

Rancho Seco
Heat Load Distribution

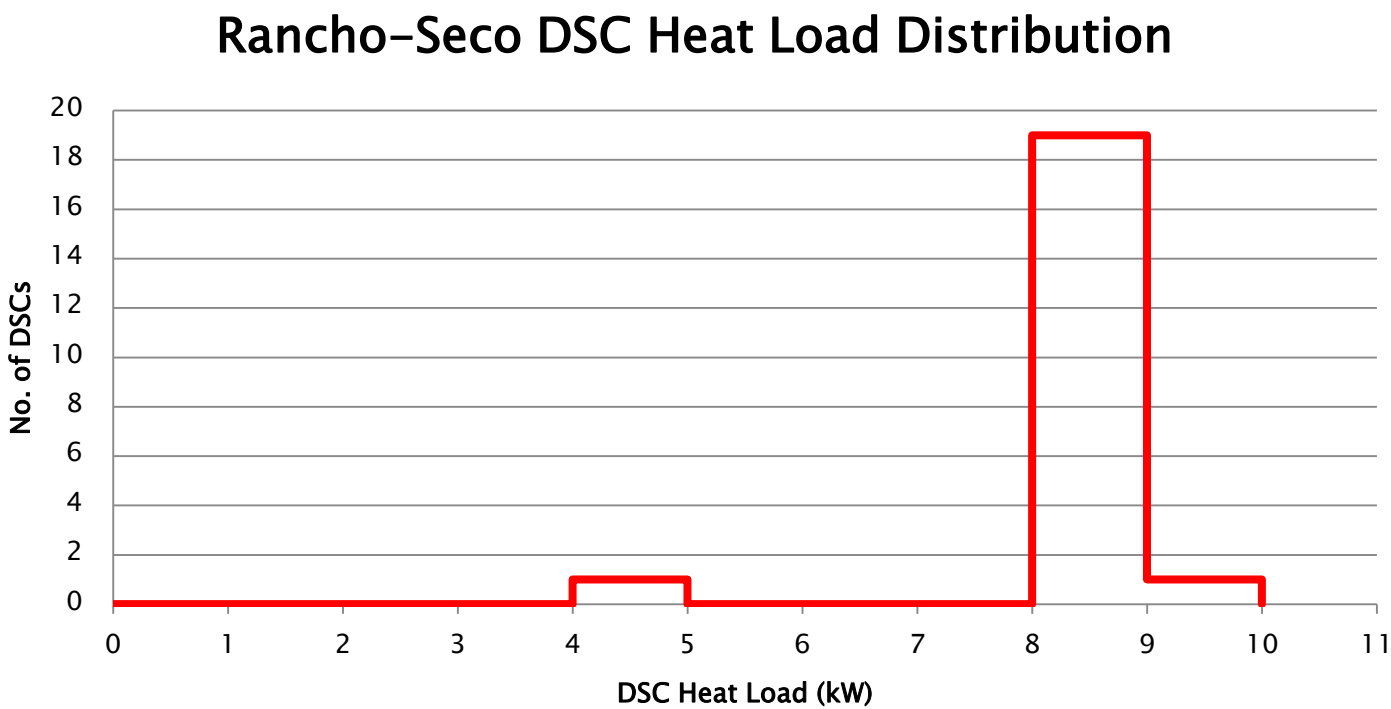

Rancho Seco
Assembly Burnup Distribution

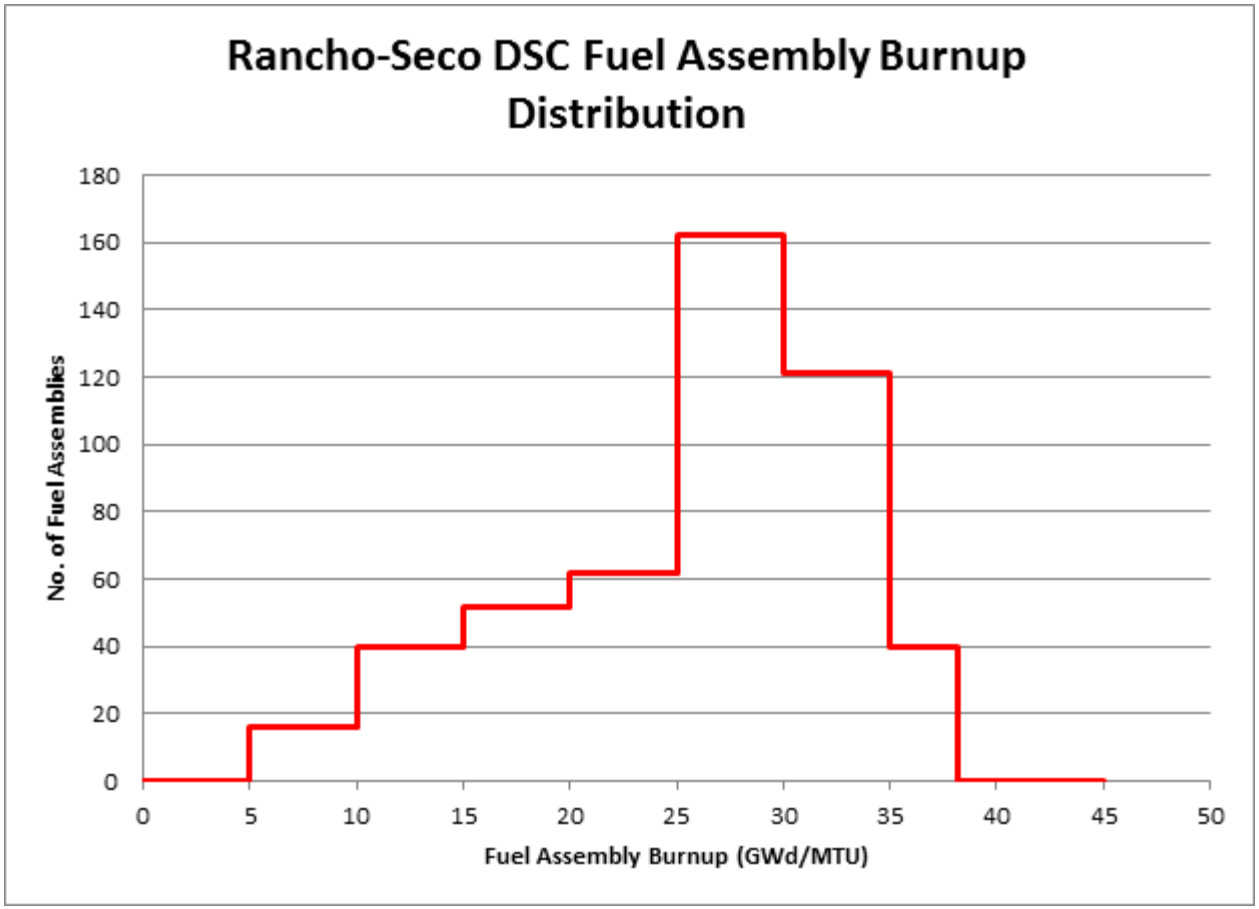

NRC Regulations & Guidance

- 10 CFR Part 72
- NUREG-1927 Rev. 1 {Std Review Plan}
  - NEI 14-03 Revision 1 (under NRC review for endorsement)
- NUREG-1748 Rev. 2 {Environmental Review}
- NRC MAPS Report (draft)
- NUREG-1801 Rev. 2 {Generic Aging Lessons Learned}
- ISG-2 Rev. 2 {Retrievability}

LRA Content

- General Information (Chapter 1)
- Scoping Evaluation (Chapter 2)
- Aging Management Reviews (Chapter 3)
- Time-Limited Aging Analyses (Appendix A)
- Aging Management Programs (Appendix B)
- Changes to ISFSI SAR (Appendix C)
- Changes to License Conditions and Associated Technical Specifications (Appendix D)
- Environmental Report Supplement (Appendix E)

General Information

- 10 CFR 72.22 Information
  - Facility Description
  - Description of Business
  - Organization and Management
  - Financial Qualifications
  - Financial Assurance for Decommissioning

Scoping Evaluation

- Identify Structures Systems and Components (SSCs) that will be subject to review for aging effects
- Scoping process
  - Based on detailed review of drawings for each of the main components of the RSNGS SSCs
  - Identify SSCs down to the part level as in-scope or out of-scope of the renewal
  - Produced detailed database for each system component
  - Detailed database is rolled up to provide a Scoping Evaluation Table

Scoping Evaluation

SSC	Criterion 1	Criterion 2	In-Scope
Dry Shielded Canister (DSC)	Yes	N/A	Yes
HSM	Yes	N/A	Yes
Transfer Cask (TC)	Yes	N/A	Yes
Transfer Cask Lifting Yoke	No	N/A	No
Spent Fuel Assemblies	Yes	N/A	Yes
ISFSI Basemat	No	Yes	Yes
ISFSI Approach Apron	No	No	No
Other Transfer Equipment	No	No	No
Auxiliary Equipment	No	No	No
Miscellaneous Equipment	No	No	No

Aging Management Reviews

- Identification of materials associated with In-Scope SSCs
- Identification of the environments these In-Scope SSCs exist within
- Identification of aging effects requiring management

Aging Management Reviews

- Identification of Materials of In-Scope SSCs
  - DSC:
    - Shell assembly: stainless steel, carbon steel (electroless nickel coated, lead)
    - Basket assembly: stainless steel, carbon steel, aluminum, poison plate material (Boral)
  - HSM:
    - Reinforced concrete, carbon steel, carbon steel rebar, stainless steel and aluminum
  - MP187 cask:
    - Stainless steel, lead, carbon steel
  - Fuel cladding:
    - Zircaloy-4
  - ISFSI Basemat:
    - Reinforced concrete

Aging Management Reviews

- Identification of environments of In-Scope SSCs
  - Gas – Inert environment inside the DSC cavity
  - Sheltered – Protected environment such as HSM interior or TC stored inside the building
  - Embedded/Encased – Material sealed inside another material (example concrete rebar)
  - External – Environment exposed to rain, wind, snow etc. (HSM exterior, ISFSI basemat)
  - ISFSI basemat below grade; exposure to soil conditions

Aging Management Reviews

- Identification of Aging Effects Requiring Management
  - Evaluate aging effects based on component materials and environments
    - Identification of potential and actual aging mechanisms
    - Specific Operating Experience

      SMUD – PDQs, 50.59/screenings, 72.48 screenings, & DCP packages

      AREVA TN – CARs, LRs, & NCRs
    - Industry Operating Experience/INPO
    - NRC Information Notices
    - NRC ISFSI inspection reports
    - NRC Bulletins/applicable ISGs
    - NRC MAPS Report (draft)

Aging Management Reviews

- Identification of Aging Effects Requiring Management (Examples)
  - Potential DSC aging effects
    - Loss of material from pitting and corrosion
  - Potential HSM concrete aging effects
    - Scaling, cracking, and spalling from freeze-thaw cycles
    - Increase in porosity and permeability due to aggressive chemical attack or moisture intrusion
  - Potential HSM steel structure aging effects
    - Loss of material due to pitting and corrosion
  - Spent fuel assembly aging effects
    - Low Burnup Fuel (<45 GWd/MTU)
    - NUREG/CR-6831
    - Inert environment

Aging Management Reviews

- Determination of activities required to manage the effects of aging (TLAAs)

- Identification of TLAA (NUREG-1927 Rev.1):
  - ISFSI SSCs "Important to Safety"
  - Equipment "Not Important to Safety" that may prevent a safety function from being performed
  - SSCs supporting "retrievability" of DSCs containing fuel

- Qualifying Criteria:
  - SSCs "Important to Safety" within the specific license
  - Consider aging effects
  - Time-limited assumptions
  - Relevant to safety determination
  - Basis for capability to perform safety function
  - Contained or incorporated by reference in design basis

Time-Limited Aging Analyses (TLAA)

- Examples of Potential TLAAs
  - DSC and transfer cask fatigue evaluation
  - DSC poison plate boron depletion
  - Thermal performance of HSMs

- Non-quantifiable terms
  - Follow appendix A of NUREG-1927

Aging Management Programs

- Determination of activities required to manage the effects of aging – (Aging Management Programs)
  - Proposed AMPs
    - HSM inspection program for external and internal surfaces
    - DSC external surfaces inspection program
    - Transfer cask inspection program
    - ISFSI Basemat

Pre-Application Inspection

- DSC confinement boundary
- Selection criteria
  - Location
  - Accessibility
  - Time duration since loading
  - Decay heat
  - OE
- Visual inspection (VT-1 and/or VT-3)

Pre-Application Inspection

- HSM
  - Roof
  - Front door
  - End walls
  - Vent openings
  - Interior (via remote camera)
- Selection criteria
  - Location
  - Accessibility
  - Time duration since loading
  - Decay heat
  - OE
- Visual Inspection (VT-1 and/or VT-3)

Pictures of In-Scope Components

Rancho Seco ISFSI Pad with HSMs
Southern exposure

Pictures of In-Scope Components

Rancho Seco ISFSI Pad with HSMs
Northern exposure

Pictures of In-Scope Components

Rancho Seco HSM Installation (April 1996)

Rancho Seco HSM in service (August 2016)

Pictures of In-Scope Components

Rancho Seco HSM Installation (April 1996)

Rancho Seco HSM in service (August 2016)

Pictures of In-Scope Components

2016 HSM-1 North facing

2016 HSM-2 South facing

Pictures of In-Scope Components

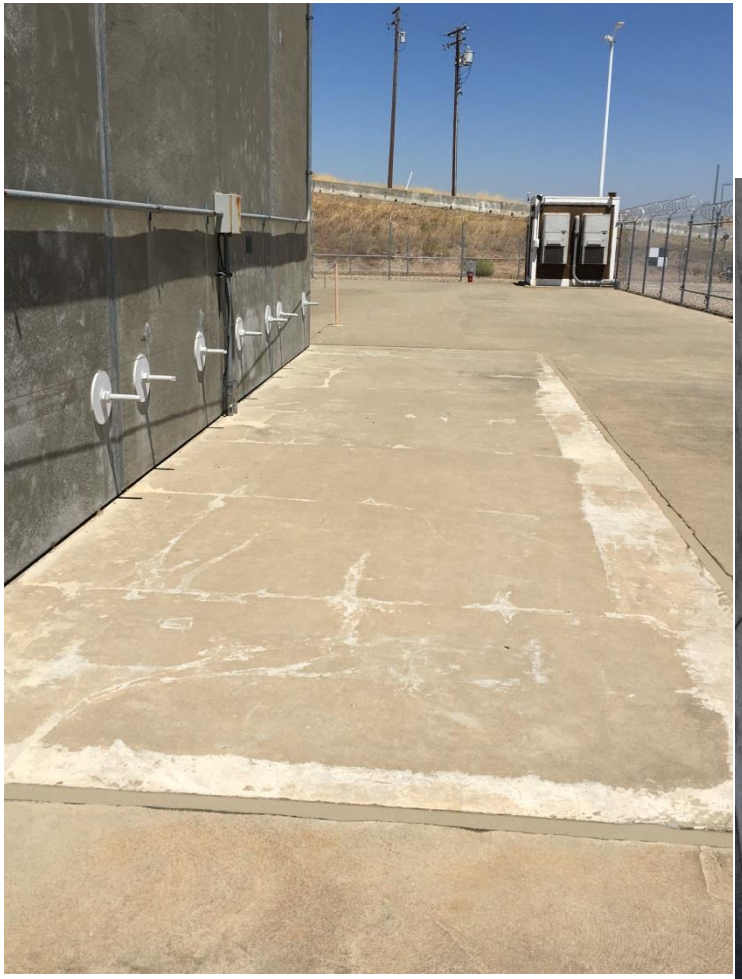

2016 ISFSI Basemat (East)

2016 ISFSI Basemat (West)

Summary

- Cost-Benefit:
  - without other storage options, renewal of existing ISFSI license is the only economic and environmentally viable alternative.
- Material Condition:
  - the materials that comprise the SSCs classified as "important to safety" are expected to be in good condition to support renewal of the 10 CFR Part 72 specific license for the Period of Extended Operation of 40 years.
  - Appropriate AMPs will be maintained to monitor their aging, ensuring these assumption remain valid.

Proposed Schedule

- Complete AMRs and AMPs – March 2017
- NRC Meeting – April 2017
- Complete Supporting Calcs – April 2017
- NRC Meeting (if needed) – Feb. 2018
- Finalize LRA – March 2018
- Formal LRA Submittal – March 28, 2018